Department of Design and Construction

THE CITY OF NEW YORK
DEPARTMENT OF DESIGN AND CONSTRUCTION
DIVISION OF INFRASTRUCTURE

30-30 THOMSON AVENUE
LONG ISLAND CITY, NEW YORK 11101-3045
TELEPHONE (718) 391-1000
WEBSITE www.nyc.gov/buildnyc

LAW

VOLUME 1 OF 3

BID BOOKLET

FOR FURNISHING ALL LABOR AND MATERIALS NECESSARY AND REQUIRED FOR:

PROJECT ID: HWMM008

SAFETY AND STREETSCAPE IMPROVEMENTS
EAST 86TH STREET BETWEEN PARK AVENUE AND SECOND AVENUE

SCHOOL SAFETY NECKDOWNS
MADISON AVENUE BETWEEN EAST 84TH STREET AND EAST 85TH STREET

INCLUDING WATER MAIN, STREET LIGHTING, AND TRAFFIC SIGNAL WORK

Together With All Work Incidental Thereto

BOROUGH OF MANHATTAN
CITY OF NEW YORK

FOR THE DEPARTMENT OF TRANSPORTATION
PREPARED BY
HDR HENNINGSON DURHAM & RICHARDSON
ARCHITECTURE AND ENGINEERING PC

April 15, 2015

15-165

Department of Design and Construction

DR. FENIOSKY A. PEÑA-MORA
Commissioner

JOHN GODDARD
Agency Chief
Contracting Officer

December 23, 2015

CERTIFIED MAIL - RETURN RECEIPT REQUEST
TRIUMPH CONSTRUCTION CORP.
1354 SENECA AVENUE
BRONX, NY 10474

RE: FMS ID: HWMM008
E-PIN: 85015B0145001
DDC PIN: 8502013HW0020C
SAFETY AND STREETSCAPE IMPROVEMENTS (E. 86TH ST) /SCHOOL SAFETY NECKDOWNS (MADISON AVENUE) - BOROUGH OF MANHATTAN
NOTICE OF AWARD

Dear Contractor:

You are hereby awarded the above referenced contract based upon your bid in the amount of $10,556,199.64 submitted at the bid opening on July 09, 2015. Within ten (10) days of your receipt of this notice of award, you are required to take the actions set forth in Paragraphs (1) through (3) below. For your convenience, attached please find a copy of Schedule A of the General Conditions to the Contract, which sets forth the types and amounts of insurance coverage required for this contract.

(1) Execute four copies of the Agreement in the Contracts Unit, 30-30 Thomson Avenue, 1st Floor, Long Island City, New York (IDCNY Building). A Commissioner of Deeds will be available to witness and notarize your signature. The Agreement must be signed by an officer of the corporation or a partner of the firm.

(2) Submit to the Contracts Unit four properly executed performance and payment bonds. If required for this contract, copies of performance and payment bonds are attached.

(3) Submit to the Contracts Unit the following insurance documentation: (a) original certificate of insurance for general liability in the amount required by Schedule A, and (b) original certificates of insurance or other proof of coverage for workers' compensation and disability benefits, as required by New York State Law. The insurance documentation specified in this paragraph is required for registration of the contract with the Comptroller's Office.

Department of Design and Construction

On or before the contract commencement date, you are required to submit all other certificates of insurance and/or policies in the types and amounts required by Schedule A. Such certificates of Insurance and/or policies must be submitted to the Agency Chief Contracting Office, Attention: Risk Manager, Fourth Floor at the above indicated department address.

Your attention is directed to the section of the Information for Bidders entitled "Failure to Execute Contract". As indicated in this section, in the event you fail to execute the contract and furnish the required bonds within the (10) days of your receipt of this notice of award, your bid security will be retained by the City and you will be liable for the difference between your bid price and the price for which the contract is subsequently awarded, less the amount of the bid security retained.

Sincerely,

Simone Smith for

John Goddard

30 - 30 Thomson Ave L.I.C., NY 11101 Telephone: (718) 391-2838 Facsimile: (718) 391-1885 www.nyc.gov/buildnyc

SPECIAL
NOTICE TO BIDDERS

Please be advised that there are no M/WBE requirements for this project. However, the Contractor is subject to DBE goals of 5% in accordance with the requirements of the FEDERAL TRANSIT ADMINISTRATION (FTA) THIRD PARTY REQUIREMENTS, Article 29, as contained in Volume 3 of 3 under Addendum No. 2.

(NO TEXT ON THIS PAGE)

SPECIAL NOTICE TO BIDDERS

The New York City Department of Small Business Services (SBS), in conjunction with the New York Business Development Corporation (NYBDC), have established a **NYC Construction Loan** pilot program to provide prime contractors and subcontractors financing for mobilization costs on certain City construction projects.

Under this initiative, loans are available for early stage mobilization needs such as insurance, labor, supplies and equipment. Bidders are strongly encouraged to visit "Growing Your Business" at www.nyc.gov/nycbusiness to learn more about the loan or contact constructionloan@sbs.nyc.gov / (212) 513-6444 to obtain details and to determine preliminary eligibility.

A successful loan applicant will be required to make an assignment of its contract (or subcontract) payments to the lender NYBDC until the loan is repaid. If the loan is to a subcontractor, a prime contractor must honor the terms of such an assignment.

A prime contractor may not discriminate against a subcontractor or potential subcontractor by reason of the subcontractor's participation, or nonparticipation, in the NYC Construction Loan program.

(NO TEXT ON THIS PAGE)

CITY OF NEW YORK

DEPARTMENT OF DESIGN AND CONSTRUCTION DIVISION OF INFRASTRUCTURE

BID BOOKLET

FOR FURNISHING ALL LABOR AND MATERIALS NECESSARY AND REQUIRED FOR:

PROJECT ID: HWMM008

SAFETY AND STREETSCAPE IMPROVEMENTS
EAST 86TH STREET BETWEEN PARK AVENUE AND SECOND AVENUE

SCHOOL SAFETY NECKDOWNS
MADISON AVENUE BETWEEN EAST 84TH STREET AND EAST 85TH STREET

INCLUDING WATER MAIN, STREET LIGHTING, AND TRAFFIC SIGNAL WORK

Together With All Work Incidental Thereto

BOROUGH OF MANHATTAN
CITY OF NEW YORK

(NO TEXT ON THIS PAGE)

PROJECT ID: HWMM008

CITY OF NEW YORK
DEPARTMENT OF DESIGN AND CONSTRUCTION
DIVISION OF INFRASTRUCTURE

BID BOOKLET

TABLE OF CONTENTS

SECTION		PAGE
PART A		
1.	Table of Contents	1
2.	Special Notice to Bidders	2
3.	Attachment 1 – Bid Information	A-1
4.	Bid Schedule	B-1
5.	Bid Form	C-1
6.	Affirmation	C-6
7.	Bid Bond	C-7
8.	M/WBE Program: M/WBE Utilization Plan	5
9.	Apprenticeship Program Requirements	19
PART B		
10.	Safety Questionnaire	21
11.	Pre-award Process	24
12.	Project Reference Form	26
13.	Contract Certificate	29
14.	Vendex Compliance	30
15.	Iran Divestment Act Compliance Rider	31
16.	Construction Employment Report	33

(NO TEXT ON THIS PAGE)

CITY OF NEW YORK
DEPARTMENT OF DESIGN AND CONSTRUCTION
DIVISION OF INFRASTRUCTURE

SPECIAL NOTICE TO BIDDERS

BID SUBMISSION REQUIREMENTS

THE FOLLOWING DOCUMENTS ARE TO BE COMPLETED AND SUBMITTED WITH THE BID:

1. Bid Schedule and Bid Form, including Affirmation
2. Bid Security (if required, see Attachment 1 on Page A-1)
3. Buy America Certification (Appendix A in Addendum No. 2)

FAILURE TO SUBMIT ITEMS (1), (2) AND (3)
WILL RESULT IN THE DISQUALIFICATION OF THE BID.

4. Safety Questionnaire
5. Construction Employment Report (if bid is $1,000,000 or more)
6. Contract Certificate (if bid is less than $1,000,000)
7. Confirmation of Vendex Compliance
8. Bidder's Certification of Compliance with Iran Divestment Act
9. Special Experience Requirements (if applicable)
10. Apprenticeship Program Questionnaire (if applicable)
11. FTA DBE Goal Page
12. Disclosure of Lobbying Activities (Appendix A1 in Addendum No. 2)
13. Debarment and Suspension Certification (Appendix A2 in Addendum No. 2) (To be submitted by successful Bidder)
14. Any addenda issued prior to the receipt of bids

This Contract must meet the requirements of 49 CFR Part 29. As such, the Contractor is required to verify that neither the Contractor, its principals, as defined at 49 CFR 29.995, or affiliates, as defined at 49 CFR 29.905, are excluded or disqualified as defined at 49 CFR 29.940 and 29.945 from transactions by any federal department or agency.

FAILURE TO SUBMIT ITEMS (4) THROUGH (14)
MAY RESULT IN THE DISQUALIFICATION OF THE BID.

NOTES:

(1) All of the above referred to blank forms to be completed and submitted with the bid are included in the BID BOOKLET.

(2) If the bidder has any questions or requires additional information, please contact the Department of Design and Construction by phone (718-391- 2601) or by fax (718-391-2615).

(3) VENDEX QUESTIONNAIRES: The Bidder is advised that Vendex Questionnaires and procedures have been changed. Vendex Questionnaires, as well as detailed instructions, may be obtained at www.nyc.gov/vendex. The bidder may also obtain Vendex forms and instructions by contacting the Agency Chief Contracting Officer or the contact person for this contract.

(4) SPECIAL EXPERIENCE REQUIREMENTS: The Bidder is advised that Special Experience Requirements may apply to this contract. Such requirements are set forth on pages 3, 3a, 3b, and 4 of this Bid Booklet.

(5) Apparent low bidder to submit DBE Utilization Goal Forms in Compliance with FTA DBE requirements (AAP 15, AAP 19, AAPHC-89, AAP 10) within 7 calendar days of the bid date.

SPECIAL NOTICE TO BIDDERS

SPECIAL EXPERIENCE REQUIREMENTS (Revised 03/2014)

(A) **SPECIAL EXPERIENCE REQUIREMENTS FOR THE BIDDER:** The Special Experience Requirements set forth below apply to the bidder. Compliance with such Special Experience Requirements will be determined solely by the City prior to an award of contract. Failure to comply with the Special Experience Requirements will result in rejection of the bid as non-responsive.

The requirements in this Section (A) apply to this contract where indicated by a blackened box (■).

■ The bidder must, within the last seven (7) consecutive years prior to the bid opening, have successfully completed in a timely fashion at least one (1) project similar in scope and type to the required work. Such prior project may have been performed as a prime contractor, subcontractor or sub-subcontractor.

The Special Experience Requirements next to the blackened box below apply to the bidder. If the bidder intends to perform such work itself, it must demonstrate compliance with the Special Experience Requirements. If the bidder intends to subcontract this work, the proposed subcontractor or sub-subcontractor must demonstrate compliance with the Special Experience Requirements. The contractor, subcontractor or sub-subcontractor (hereinafter referred to as the "entity") that will perform any specific area of work indicated by the blackened box below, may have performed the required prior project(s) as a prime contractor, subcontractor or sub-subcontractor. Once approved, no substitution will be permitted, unless the qualifications of the proposed replacement have been approved in writing in advance by the City.

☐ **Trunk Water Main Work:** The entity that will perform the trunk water main work must, within the last seven (7) consecutive years prior to the bid opening, have successfully completed in a timely fashion at least one (1) project similar in scope and type to the required work.

☐ **Best Management Practice Work:** Best Management Practice ("BMP") Work is any item of work in the Bid Schedule that begins with the prefix "BMP". The entity that will perform any BMP Work must, within the last five (5) consecutive years prior to the bid opening, have successfully completed in a timely fashion at least three (3) projects similar in scope and type to the required work.

For professional services in connection with BMP Work, (i.e., monitoring and reporting services), the individual who will perform the required services must, within the last five (5) consecutive years prior to the bid opening, have successfully completed in a timely fashion at least three (3) projects similar in scope and type to the required work. Additional requirements are set forth below.

☐ The individual serving as the Restoration Specialist (Construction Monitor) must be a Registered Landscape Architect licensed by the state of New York, or must have equivalent professional experience.

☐ The individual serving as the Erosion and Sediment Control Licensed/Certified Professional must be a Certified Professional in Erosion and Sediment Control (CPESC), certified by CPESC, Inc.

☐ **Micro-Tunneling/Pipe Jacking Work:** The entity that will perform the micro-tunneling/pipe jacking work must, within the last five (5) consecutive years prior to the bid opening, have successfully completed in a timely fashion at least two (2) projects similar in scope and type to the required work.

☐ **OTHER:** _____

_____

(B) SPECIAL EXPERIENCE REQUIREMENTS FOR SPECIFIC AREAS OF WORK (to be provided after an award of contract):

The requirements in this Section (B) apply to this contract where indicated by a blackened box (■).

The Special Experience Requirements set forth below apply to the contractor, subcontractor or sub-subcontractor that will perform the specific area of work. **Compliance with such Special Experience Requirements will be determined solely by the City after an award of contract.** After an award of contract, when requested by the City, the contractor will be required to submit the qualifications of the contractor, subcontractor or sub-subcontractor that will perform the specific area of work. If the bidder intends to perform such work itself, it must demonstrate compliance with the Special Experience Requirements. If the bidder intends to subcontract this work, the proposed subcontractor or sub-subcontractor must demonstrate compliance with the Special Experience Requirements. Once approved, no substitution will be permitted, unless the qualifications of the proposed replacement have been approved in writing in advance by the City.

Special Experience Requirements apply to the contractor, subcontractor or sub-subcontractor (hereinafter referred to as the "entity") that will perform any specific area of work indicated by a blackened box. The entity may have performed the required prior project(s) as a prime contractor, subcontractor or sub-subcontractor.

☐ **Hazmat Work:** Hazmat Work is any item of work in the Bid Schedule that begins with the prefix 8.01. The entity that will perform any Hazmat Work must, within the last three (3) consecutive years prior to the bid opening, have successfully completed in a timely fashion at least five (5) projects similar in scope and type to the required work.

☐ **Pile, CFA Pile, and/or Mini-Pile Work:** The entity that will perform the Pile, CFA Pile and/or Mini-Pile Work must, within the last three (3) consecutive years prior to the bid opening, have successfully completed in a timely fashion at least two (2) projects similar in scope and type to the required work.

For professional services in connection with Pile Work, (i.e., engineering and inspection services), the individual who will perform the required services must be a Professional Engineer licensed by the state of New York. Such individual must also comply with the above requirements for prior projects.

☐ **Construction Report, Monitoring And Post-Construction Report, and Continuous Real-Time Monitoring For Vibrations And Movements And Post-Construction Report Work:** The entity that will perform the Construction Report, Monitoring For Vibrations And Movements, and Post-Construction Report Work must, within the last three (3) consecutive years prior to the bid opening, have successfully completed in a timely fashion at least two (2) projects similar in scope and type to the required work.

For professional services in connection with Reporting and Monitoring Work, (i.e., engineering and inspection services), the individual who will perform the required services must be a Professional Engineer licensed by the state of New York. Such individual must also comply with the above requirements for prior projects.

☐ **OTHER:** _____

_____

(C) **SPECIFICATIONS:** In the event of any conflict, omission or inconsistency between (1) the Specifications and/or Contract Drawings, and (2) the Special Experience Requirements in Section (B) of the Special Notice To Bidders, the special experience listed in the Specifications and/or Contract Drawings shall be controlling. The Special Experience Requirements in Section (B) of this Special Notice To Bidders are only for the convenience of the bidders.

(D) **SUBMISSION REQUIREMENTS:** For each project submitted to demonstrate compliance with the Special Experience Requirements, the bidder must complete and submit the Qualification Form included in the Bid Booklet. The City will only evaluate a project if the following criteria are met: (1) the project is described on the Qualification Form, and (2) all information on the Qualification Form is provided. The City will not evaluate any project which does not comply with the criteria set forth herein, including any project which is referred to only on the resume of an individual.

If Special Experience Requirements are indicated for any specific area of work, the submission requirement set forth above shall apply to the entity that will perform the specific area of work.

(E) **CONDITIONS**: In determining compliance with the Special Experience Requirements for the bidder set forth above, the City may consider prior projects completed by principal(s) or other employees of the bidder while affiliated with another entity, subject to the conditions set forth below.

- Any principal or other employee on whose prior experience the bidder is relying to demonstrate compliance with this special experience requirement must have held the following: (a) a significant management role in the prior entity with which he/she was affiliated, and (b) a significant management role in the entity submitting the bid for a period of six (6) months or more from the inception of the bidding entity.

- The bidder may not rely on the experience of its principals or other employees to demonstrate compliance with any other requirements, including without limitation, financial requirements or requirements for a specified minimum amount of annual gross revenues.

(F) **JOINT VENTURES**: In the event the bidder is a joint venture, at least one firm in the joint venture must meet the above described experience requirements.

Qualification Form

List previous projects completed to meet the special experience requirements for this contract. Please photocopy this form for submission of all required projects.

Name of Contractor: Triumph Construction Corp.

Name of Project: Queens Bike Plaza Improvements

Location of Project: Queen Plaza

Owner or Owner's representative (Architect or Engineer) who is familiar with the work performed:

Name: Don Colangine

Title: Project Manager Phone Number: 212-312-3765

Brief description of the Project completed or the Project in progress: Water main, Sewer, lighting, Signal work, Curbs, Sidewalk, Asphalt, Milling & Paving, Landscape, Planting, Irrigation

Was the Project performed as a prime, a subcontractor or a sub-subcontractor: Prime

Amount of Contract, Subcontract or Sub-subcontract: 38,330,225.89

Start Date and Completion Date: 2009 - 2012

****

Name of Contractor: Triumph Const. Corp.

Name of Project: Low pressure water main

Location of Project: Brooklyn Navy yard.

Owner or Owner's representative (Architect or Engineer) who is familiar with the work performed:

Name: Carmine Stabile

Title: President Phone Number: 516-742-0491

Brief description of the Project completed or the Project in progress: Water main, Sewer, Curbs, Sidewalk, Asphalt / milling & paving, Landscape

Was the Project performed as a prime, a subcontractor or a sub-subcontractor: Prime

Amount of Contract, Subcontract or Sub-subcontract: 12,937,036.73

Start Date and Completion Date: 2010 - 2012

Qualification Form

List previous projects completed to meet the special experience requirements for this contract. Please photocopy this form for submission of all required projects.

Name of Contractor: _____

Name of Project: _____

Location of Project: _____

Owner or Owner's representative (Architect or Engineer) who is familiar with the work performed:

Name: _____
Title: _____ Phone Number: _____

Brief description of the Project completed or the Project in progress: _____
_____
_____

Was the Project performed as a prime, a subcontractor or a sub-subcontractor: _____

Amount of Contract, Subcontract or Sub-subcontract: _____

Start Date and Completion Date: _____

****

Name of Contractor: _____

Name of Project: _____

Location of Project: _____

Owner or Owner's representative (Architect or Engineer) who is familiar with the work performed:

Name: _____
Title: _____ Phone Number: _____

Brief description of the Project completed or the Project in progress: _____
_____
_____

Was the Project performed as a prime, a subcontractor or a sub-subcontractor: _____

Amount of Contract, Subcontract or Sub-subcontract: _____

Start Date and Completion Date: _____

(NO TEXT ON THIS PAGE)

ATTACHMENT 1 - BID INFORMATION

PROJECT ID: HWMM008
PIN: 8502013HW0020C

Description and Location of Work:

SAFETY AND STREETSCAPE IMPROVEMENTS
EAST 86TH STREET BETWEEN PARK AVENUE AND SECOND AVENUE

SCHOOL SAFETY NECKDOWNS
MADISON AVENUE BETWEEN EAST 84TH STREET AND EAST 85TH STREET

INCLUDING WATER MAIN, STREET LIGHTING, AND TRAFFIC SIGNAL WORK

Together With All Work Incidental Thereto

BOROUGH OF MANHATTAN
CITY OF NEW YORK

Documents Available At: 30-30 Thomson Avenue
First Floor Bid Procurement Room
Long Island City, New York 11101
8:30 A.M. to 4:00 P.M. – Monday through Friday

Submission of Bids To: 30-30 Thomson Avenue
First Floor Bid Procurement Room
Long Island City, New York 11101
Before 11:00 A.M. on **JULY 9, 2015**

Bid Opening: 30-30 Thomson Avenue
First Floor Bid Procurement Room
Long Island City, New York 11101

Time and Date: 11:00 A.M. on **JULY 9, 2015**

Pre-Bid Conference:

Yes	_____	No	X
If Yes, Mandatory	_____	Optional:	_____
Time and Date:	_____		
Location:	_____		

Bid Security: Bid Security is required in the amount set forth below; provided, however, bid security is not required if the TOTAL BID PRICE set forth on the Bid Form is less than $ 1,000,000.00.

(1) Bond in an amount not less than 10% of the TOTAL BID PRICE set forth on the Bid Form, OR

(2) Certified Check in an amount not less than 10% of the TOTAL BID PRICE set forth on the Bid Form.

Performance and Payment Security: Required for contracts in the amount of $1,000,000 or more. Performance Security and Payment Security shall each be in an amount equal to 100% of the Contract Price.

Agency Contact Person: Lorraine Holley
Phone: 718-391-2601 FAX: 718-391-2615

(NO TEXT ON THIS PAGE)

1. Participation by Disadvantaged Business Enterprises (DBE)

1.1. Bidders' attention is called to NYCDOT DBE Utilization Goal in Compliance with FTA DBE Requirements included in the FTA Third Party Requirements (annexed to Addendum No. 2). A DBE utilization goal of five percent (5%) has been established for this Contract.

1.2. Bidders are required to document sufficient DBE participation to meet the contract specific goal of five percent (5%) DBE participation or, alternatively, document adequate good faith efforts to do so, as provided for in 49 CFR 26.53. Award of this contract is conditioned on submission of the following:

- NYCDOT DBE Utilization Goal Forms attached hereto as part of the FTA DBE Requirements. Please complete and submit with the bid the following (annexed to Addendum No. 2) :

  a) (Form AAP 15) Please fill out to provide the Name of Bidder's Designated DBE Officer;

  b) (Form AAP 19 FTA - DBE Schedule of Utilization).

  In preparation of the Bid Form, Bidders shall consider the Dollar Value of work to be performed by the potential DBE subcontractors. Please note that for Materials or Suppliers (MS) utilized to attain the project's 5% DBE goal, only 60% of associated supplier contract value could be accounted for the Dollar Value of Utilization.

The following forms shall be provided by the successful bidder:

- Complete form AAPHC 89 FTA (DBE Utilization Worksheet) and 89-1 FTA to report if there has been any changes from original utilization plan (annexed to Addendum No. 2) to be submitted by the successful Bidder as a part of post-bid submission.

2. Federal Aid Requirements

2.1. Payments for the Contract Work will be funded in part by Federal funds from the Federal Transit Administration ("FTA") and New York State Department of Transportation (NYSDOT). The receipt of such funds is conditioned upon the Bidder's compliance with certain Federal and State provisions with respect to the submission of bids. The Bidder must comply with the applicable provisions set forth in the FTA Third Party Requirements (annexed to Addendum No. 2), as well as Standard Clauses for All New York State Contracts (annexed to Addendum No. 2). The Bidder shall be responsible for submitting all certifications, schedules, documents and any other materials required hereunder.

3. Federal Requirements Compliance Certifications

3.1. FTA regulations require Bidders to complete and submit the following certifications which are annexed to the FTA Requirements:

3.1.1. Buy America Certification **(To be submitted with bid)**

- This solicitation and the resulting contract are subject to the Buy America requirements of 49 U.S.C. Section 5323(j) and the Federal Transit

Administration's implementing regulations found at 49 C.F.R. Part 661. These regulations require, as a matter of responsiveness, that the Bidder submits with its bid a completed certification in accordance with Part 661.6 or 661.12, as appropriate. These certifications are set forth in this solicitation at Appendix A (annexed to Addendum No. 2). **Bids that are not accompanied by a completed Buy America Certification shall be rejected as non-responsive.**

- If the Bidder seeks a waiver to the Buy America provision, an application for a waiver must be submitted. The application should contain its justification to support the waiver and must be submitted within five (5) working days of the bid opening. (The Bidder is referred to 49 CFR 661.7, for guidance on preparation of a Buy America waiver application).

3.1.2. Debarment and Suspension Certification (To be submitted by successful Bidder)

3.1.2.1. This Contract must meet the requirements of 49 CFR Part 29. As such, the contractor is required to verify that neither the contractor, its principals, as defined at 49 CFR 29.995, or affiliates, as defined at 49 CFR 29.905, are excluded or disqualified as defined at 49 CFR 29.940 and 29.945 from transactions by any federal department or agency.

3.1.2.2. Fill out and submit form on Appendix A2 (annexed to Addendum No. 2).

3.1.2.3. The Contractor must also ensure that they and their subcontractors are not included in the Excluded Parties list by visiting the Federal website and inserting their name in the "search exclusions" in the left hand bar and must provide the printout of the search result that shows that they are not listed in the Excluded Parties list https://www.epls.gov/.

3.1.3. Lobbying Certification (To be submitted by successful Bidder)

3.1.3.1. Contractors who apply or bid for an award of $100,000 or more shall file the certification required by 49 CFR part 20, "New Restrictions on Lobbying." Each tier certifies to the tier above that it will not and has not used Federal appropriated funds to pay any person or organization for influencing or attempting to influence an officer or employee of any agency, a member of Congress, officer or employee of Congress, or an employee of a member of Congress in connection with obtaining any Federal contract, grant or any other award covered by 31 U.S.C. 1352. Each tier shall also disclose the name of any registrant under the Lobbying Disclosure Act of 1995 who has made lobbying contacts on its behalf with non-Federal funds with respect to that Federal contract, grant or award covered by 31 U.S.C. 1352.

3.1.3.2. Fill out and submit form on Appendix A1 (annexed to Addendum No. 2).

3.1.4. Non-Collusive Bidding (See "Standard Clauses for all State Contracts" annexed to Addendum No. 2)

3.1.4.1. Both State law and Federal regulation require that for work performed under competitively bid contracts, financed with State and/or Federal funds, contractor submitting bids for such contracts certify that they have not engaged in any activity that would artificially affect prices or restrict competition through the exchange or sharing of information among bidders. In addition, Federal law required that the bidder certify that he/she is an eligible bidder under Federal regulations and is nor under, or about to be faced with, any sanction imposed by any Federal agency.

3.1.5. DBE (See FTA Third Party Requirements and Appendix B annexed to Addendum No. 2)

3.1.6. Federal Davis-Bacon Wage Rates. All Bidders are directed to the specific provisions of the Contract, that Applicable Statutes and Applicable Agreements that mandate compliance with legal requirements related to payment of wages, in particular, Federal Davis-Bacon Wage Rates applicable to the Contract work to be performed by the contractor at the time the work is performed.

3.1.6.1. A copy of the current federal Davis-Bacon Wage rates as of the date this IFB was prepared is attached to Addendum No. 2. Bidders and the selected Contractor, if any, shall be responsible for confirming and adhering to the actual Davis-Bacon Wage rates in effect at the time after the issuance of this IFB including, without limitation, during the contract term. Federal Davis-Bacon Wage rates may be accessed through the US department of Labor's Website at: http://www.wdol.gov/wdol/scafiles/davisbacon/ny.html.

(NO TEXT ON THIS PAGE)

DISADVANTAGED BUSINESS ENTERPRISE UTILIZATION GOALS
For
Federal Transit Administration Projects

New York City Department of Transportation

The New York City Department of Transportation has established the following Disadvantaged Business Enterprise (DBE) utilization goal for this contract. The goal is expressed as a percentage of the total federal share of the contract. It is the Contractor's responsibility to secure DBE participation in the contract work to satisfy this goal, and to document acceptable good-faith efforts taken to fulfill the goal. Utilization is measured as the amount actually paid to DBE's, not the contract bid price for the work.

Disadvantaged Business Enterprise Utilization Goal 5 %

A list of currently certified Disadvantage Business Enterprises can be obtained by contacting the Unified Certification program for NYS on the web:
http://biznet.nysucp.net/

Disadvantaged Business Enterprise Officer

The Bidder shall designate and enter below the name of a Disadvantaged Business Enterprise Officer who have the responsibility for effectively administering and promoting an active Disadvantaged Business Enterprise Program and who must be assigned adequate authority and responsibility to do so.

Bidder-Designated DBE Officer: Carlo Cuzzi, President
(Name, Title)

Telephone: 718-861-6060
Fax Number: 718-861-6060
E-Mail Address CCuzzi@TriumphConstCorp.com

RETURN THIS PAGE WITH BID

Appendix A

BUY AMERICA CERTIFICATION

Certification requirement for procurement of steel, iron, or manufactured products.

Certificate of Compliance with 49 U.S.C. 5323(j)(1)

The bidder or offeror hereby certifies that it will meet the requirements of 49 U.S.C. 5323(j)(1) and the applicable regulations in 49 CFR Part 661.

Date 7/9/15

Signature [signature]

Company Name Triumph Const. Corp.

Title President

Certificate of Non-Compliance with 49 U.S.C. 5323(j)(1)

The bidder or offeror hereby certifies that it cannot comply with the requirements of 49 U.S.C. 5323(j)(1), but it may qualify for an exception pursuant to 49 U.S.C. 5323(j)(2)(B) or (j)(2)(D) and the regulations in 49 CFR 661.7.

Date _____

Signature _____

Company Name _____

Title _____

Certification requirement for procurement of buses, other rolling stock and associated equipment.

Certificate of Compliance with 49 U.S.C. 5323(j)(2)(C).

The bidder or offeror hereby certifies that it will comply with the requirements of 49 U.S.C. 5323(j)(2)(C) and the regulations at 49 CFR Part 661.

Date 7/9/15

Signature [signature]

Company Name Triumph Const. Corp.

Title President

Appendix A1

DISCLOSURE OF LOBBYING ACTIVITIES

I Carlo Cuzzi President hereby certifies on behalf of Triumph Const. Corp.
name and title of company representative — name of company

that will file the certification required by 49 CFR Part 20, "New Restrictions on Lobbying." Each tier certifies to the tier above that it will not and has not used Federal appropriated funds to pay any person or organization for influencing or attempting to influence an officer or employee of any agency, a member of Congress, officer or employee of Congress, or an employee of a member of Congress in connection with obtaining any Federal contract, grant or any other award covered by 31 U.S.C. 1352. Each tier shall also disclose the name of any registrant under the Lobbying Disclosure Act of 1995 who has made lobbying contacts on its behalf with non-Federal funds with respect to that Federal contract, grant or award covered by 31 U.S.C. 1352. Such disclosures are forwarded from tier to tier up to the recipient.

The Contractor certifies, to the best of his or her knowledge and belief, that:

(1) No Federal appropriated funds have been paid or will be paid, by or on behalf of the undersigned, to any person for influencing or attempting to influence an officer or employee of an agency, a Member of Congress, an officer or employee of Congress, or an employee of a Member of Congress in connection with the awarding of any Federal contract, the making of any Federal grant, the making of any Federal loan, the entering into of any cooperative agreement, and the extension, continuation, renewal, amendment, or modification of any Federal contract, grant, loan, or cooperative agreement.

(2) If any funds other than Federal appropriated funds have been paid or will be paid to any person for making lobbying contacts to an officer or employee of any agency, a Member of Congress, an officer or employee of Congress, or an employee of a Member of Congress in connection with this Federal contract, grant, loan, or cooperative agreement, the undersigned shall complete and submit Standard Form--LLL, "Disclosure Form to Report Lobbying," in accordance with its instructions [as amended by "Government wide Guidance for New Restrictions on Lobbying," 61 Fed. Reg. 1413 (1/19/96).

(3) The undersigned shall require that the language of this certification be included in the award documents for all subawards at all tiers (including subcontracts, subgrants, and contracts under grants, loans, and cooperative agreements) and that shall certify and disclose accordingly.

This certification is a material representation of fact upon which reliance was placed when this transaction was made or entered into. Submission of this certification is a prerequisite for making or entering into this transaction imposed by 31, U.S.C. § 1352 (as amended by the Lobbying Disclosure Act of 1995). Any person who fails to file the required certification shall be subject to a civil penalty of not less than $10,000 and not more than $100,000 for each such failure.

Pursuant to 31 U.S.C. § 1352(c)(1)-(2)(A), any person who makes a prohibited expenditure or fails to file or amend a required certification or disclosure form shall be subject to a civil penalty of not less than $10,000 and not more than $100,000 for each such expenditure or failure.

The Contractor, Triumph Const. Corp. certifies or affirms the truthfulness and accuracy of each statement of its certification and disclosure, if any. In addition, the Contractor understands and agrees that the provisions of 31 U.S.C. A 3801, *et seq., apply* to this certification and disclosure, if any.

[signature] Signature of Contractor's Authorized Official

Carlo Cuzzi Name and Title of Contractor's Authorized Official

7/9/15 Date

All applicants and recipients shall agree to abide by the statements in paragraphs (1) and (2) listed below:

1. "Policy. It is the policy of USDOT that DBE's as defined in 49 CFR Part 26 shall have the maximum opportunity to participate in the performance of contracts financed in whole or in part with Federal funds under this agreement. Consequently, the DBE requirements of 49 CFR Part 26 apply to this agreement."
2. "DBE Obligation. The recipient or its contractor agrees to ensure that DBE's as defined in 49 CFR Part 26 have the maximum opportunity to participate in the performance of contracts and subcontracts financed in whole or in part with Federal funds provided under this agreement. In this regard, all recipients or contractors shall take all necessary and reasonable steps in accordance with 49 CFR Part 26 to ensure that DBE's have the maximum opportunity to compete for and perform contracts. Recipients and their contractors shall no discriminate on the basis of race, color national origin, or sex in the award and performance of US DOT assisted contracts.

   Because this is a federally funded project with its own DBE requirement (noted above) no separate NYC M/WBE program condition will apply to this contract. Further information or questions can be directed to:

New York City Department of Design and Construction
Internal Audit Division
Contract Compliance Unit
30-30 Thomson Avenue
L.I.C., New York 10001
Telephone: (718) 391-1716
Email: LibonatTh@ddc.nyc.gov
Attention: Thomas Libonati, Federal Contracts Compliance Officer

Appendix A2

CERTIFICATION OF A CONTRACTOR REGARDING DEBARMENT, SUSPENSION AND OTHER RESPONSIBILITY MATTERS

The Contractor Triumph Const. Corp; certifies to the best of its knowledge and belief, that it and its principals:

1. Are not presently debarred, suspended, proposed for debarment, declared ineligible, or voluntarily excluded from covered transactions by any Federal department or agency;

2. Have not within a three-year period preceding this proposal been convicted of or had a civil judgment rendered against them for commission of fraud or a criminal offense in connection with obtaining, attempting to obtain, or performing a public (Federal, State or Local) transaction or contract under a public transaction; violation of Federal or State antitrust statutes or commission of embezzlement, theft, forgery, bribery, falsification or destruction of records, making false statements, or receiving stolen property;

3. Are not presently indicted for or otherwise criminally or civilly charged by a governmental entity (Federal, State or Local) with commission of any of the offenses enumerated in paragraph (2) of this certification; and

4. Have not within a three-year period preceding this proposal or bid had one or more public transactions (Federal, State or Local) terminated for cause or default.

5. The Contractor agrees to provide the City with immediate written notice if, at any time, it learns that its certification was erroneous when submitted or has become erroneous by reason of changed circumstances. Each Subcontractor or Vendor for the Contractor shall provide the same updated notice to the Contractor and the Contractor shall be solely responsible for collecting, updating and submitting updated information to the City.

NOTE: If for any reason the Contractor is unable to certify to any of the statements in this certification, the Contractor shall attach an explanation to this certification.

THE CONTRACTOR, Triumph Const. Corp CERTIFIES OR AFFIRMS THE TRUTHFULNESS AND ACCURACY OF THE CONTENTS OF THE STATEMENTS SUBMITTED ON OR WITH THIS CERTIFICATION AND UNDERSTANDS THAT THE PROVISIONS OF 31 U.S.C. SECTIONS 3801 ET SEQ. ARE APPLICABLE THERETO.

President

Signature and Title of Authorized Official

9/15/15

Date

DISADVANTAGED BUSINESS ENTERPRISE UTILIZATION GOALS
For
Federal Transit Administration Projects

New York City Department of Transportation

The New York City Department of Transportation has established the following Disadvantaged Business Enterprise (DBE) utilization goal for this contract. The goal is expressed as a percentage of the total federal share of the contract. It is the Contractor's responsibility to secure DBE participation in the contract work to satisfy this goal, and to document acceptable good-faith efforts taken to fulfill the goal. Utilization is measured as the amount actually paid to DBE's, not the contract bid price for the work.

Disadvantaged Business Enterprise Utilization Goal 5 %

A list of currently certified Disadvantage Business Enterprises can be obtained by contacting the Unified Certification program for NYS on the web:
http://biznet.nysucp.net/

Disadvantaged Business Enterprise Officer

The Bidder shall designate and enter below the name of a Disadvantaged Business Enterprise Officer who have the responsibility for effectively administering and promoting an active Disadvantaged Business Enterprise Program and who must be assigned adequate authority and responsibility to do so.

Bidder-Designated DBE Officer: _____
(Name, Title)

Telephone: _____
Fax Number: _____
E-Mail Address _____

RETURN THIS PAGE WITH BID

All applicants and recipients shall agree to abide by the statements in paragraphs (1) and (2) listed below:

1. "Policy. It is the policy of USDOT that DBE's as defined in 49 CFR Part 26 shall have the maximum opportunity to participate in the performance of contracts financed in whole or in part with Federal funds under this agreement. Consequently, the DBE requirements of 49 CFR Part 26 apply to this agreement."
2. "DBE Obligation. The recipient or its contractor agrees to ensure that DBE's as defined in 49 CFR Part 26 have the maximum opportunity to participate in the performance of contracts and subcontracts financed in whole or in part with Federal funds provided under this agreement. In this regard, all recipients or contractors shall take all necessary and reasonable steps in accordance with 49 CFR Part 26 to ensure that DBE's have the maximum opportunity to compete for and perform contracts. Recipients and their contractors shall no discriminate on the basis of race, color national origin, or sex in the award and performance of US DOT assisted contracts.

   Because this is a federally funded project with its own DBE requirement (noted above) no separate NYC M/WBE program condition will apply to this contract. Further information or questions can be directed to:

New York City Department of Design and Construction
Internal Audit Division
Contract Compliance Unit
30-30 Thomson Avenue
L.I.C., New York 10001
Telephone: (718) 391-1716
Email: LibonatTh@ddc.nyc.gov
Attention: Thomas Libonati, Federal Contracts Compliance Officer

BID SCHEDULE

NOTICE TO BIDDERS

Items listed in this Bid Schedule which have one (1) digit followed by a decimal (e.g. 4.02 CB), shall comply with the requirements of the corresponding numerical Sections of the NYCDOT Standard Highway Specifications, dated November 1, 2010, as amended by Addendum No. 1, herein Volume 3 of 3.

Items listed in this Bid Schedule which have two (2) digits beginning with the numbers "5", "6" and "7" followed by a decimal (e.g. 52.11D12, 60.12D06, and 70.61RE) shall comply with the requirements of the New York City Department of Environmental Protection (NYCDEP) STANDARD SEWER AND WATER MAIN SPECIFICATIONS dated July 1, 2014, as amended by Addendum No. 2 herein Volume 3 of 3.

Items listed in this Bid Schedule which have three (3) digits followed by a decimal (e.g. 670.2002) shall comply with the requirements of the corresponding numerical Sections of the New York State Department of Transportation (NYSDOT) STANDARD SPECIFICATIONS of May 1, 2008, as amended to May 7, 2015. However, these items neither imply the State's involvement in any testing and approval of materials, nor in the supervision of construction. All references therein to the "Department", "Materials Bureau", "Regional Engineer", etc., shall be deemed to mean the "Engineer". Where any reference is made on the plans or specifications to the "State" or any of its officials, the Contractor shall substitute the City of New York, Department of Design and Construction, or any of its appropriate officials.

Items listed in this Bid Schedule beginning with the prefix "HW-" (e.g. HW-914, etc.) shall comply with the requirements of the corresponding alphanumeric Section incorporated in Addendum No. 1, herein Volume 3 of 3.

Items listed in this Bid Schedule with the prefix "PK-" (e.g. PK-473) are modified version of NYCDPR Items and shall comply with the requirements of the corresponding alphanumeric Sections incorporated in Addendum No. 1, herein Volume 3 of 3.

Items listed in this Bid Schedule beginning with the prefix "SL-" (e.g. SL-20.08.01) are Street Lighting Items, less the prefix, which shall be done in accordance with the requirements of Subsection 1.06.23.(D) and Section 1.06.49 in the Standard Highway Specifications.

Items listed in this Bid Schedule beginning with the prefix "T-" (e.g. T-1.20) are Traffic Items, less the prefix, which shall be done in accordance with the requirements of Subsection 1.06.23.(D) and Section 1.06.49 in the Standard Highway Specifications.

Items listed in this Bid Schedule beginning with the prefix "UTL-" (e.g. UTL-6.01.9) are Gas Cost Sharing (EP-7) Items which shall be done in accordance with the requirements of the corresponding numeric Sections incorporated in Addendum No. 3, herein Volume 3 of 3.

BID SCHEDULE

NOTE: (1) The Agency may reject a bid if it contains unbalanced bid prices. An unbalanced bid is considered to be one containing lump sum or unit items which do not reflect reasonable actual costs plus a reasonable proportionate share of the Bidder's anticipated profit, overhead costs, and other indirect costs, anticipated for the performance of the items in question.

(2) The following bid prices on Unit Price Contracts are to be paid for the actual quantities of the item numbers in the completed work or structure, and they cover the cost of all work, labor, material, tools, plant and appliances of every description necessary to complete the entire work, as specified, and the removal of all debris, temporary work and appliances.

(3) PLEASE BE SURE A LEGIBLE BID IS ENTERED, IN INK, FOR EACH ITEM.
Alterations must be initialed in ink by the bidder.

(4) The Extended Amount entered in Column 6 shall be the product of the Estimated Quantity in Column 3 times the Unit Price Bid in Column 5.

(5) Prospective bidders must examine the Bid Schedule carefully and, before bidding, must advise the Commissioner, in writing, if any pages are missing, and must request that such missing pages be furnished them. The pages of this Bid Schedule are numbered consecutively, as follows:
B - 3 Through B - 44

PLEASE BE SURE A LEGIBLE BID IS ENTERED FOR EACH ITEM.
THE BIDDER SHALL INSERT THE TOTAL BID PRICE IN
THE BID FORM ON PAGE C-4 OF THIS BID BOOKLET.

NEW YORK CITY DEPARTMENT OF DESIGN AND CONSTRUCTION
DIVISION OF INFRASTRUCTURE - BUREAU OF DESIGN

PROJECT ID: HWMM008
CONTRACT PIN: 8502013HW0020C

BID SCHEDULE FORM

COL. 1 SEQ. NO	COL. 2 ITEM NUMBER and DESCRIPTION	COL. 3 ENGINEER'S ESTIMATE OF QUANTITY	COL. 4 UNIT	COL. 5 UNIT PRICE (IN FIGURES) DOLLARS	CTS	COL. 6 EXTENDED AMOUNT (IN FIGURES) DOLLARS	CTS
001	**4.02 AG** ASPHALTIC CONCRETE WEARING COURSE, 3" THICK	4,789.00	S.Y.	40	00	191,560	00
002	**4.02 CB** ASPHALTIC CONCRETE MIXTURE	1,249.00	TONS	150	00	187,350	00
003	**4.04 H** CONCRETE BASE FOR PAVEMENT, VARIABLE THICKNESS FOR TRENCH RESTORATION, (HIGH-EARLY STRENGTH)	1,091.00	C.Y.	125	00	136,375	00
004	**4.05 AX** HIGH-EARLY STRENGTH REINFORCED CONCRETE PAVEMENT (BUS STOPS)	286.00	C.Y.	400	00	114,400	00
005	**4.06** CONCRETE IN STRUCTURES, CLASS A-40	48.00	C.Y.	1,500	00	72,000	00
006	**4.07 CB** NEW GRANITE CURB, STRAIGHT	492.00	L.F.	200	00	98,400	00

NEW YORK CITY DEPARTMENT OF DESIGN AND CONSTRUCTION
DIVISION OF INFRASTRUCTURE - BUREAU OF DESIGN

PROJECT ID: HWMM008
CONTRACT PIN: 8502013HW0020C

BID SCHEDULE FORM

COL 1 SEQ. NO.	COL 2 ITEM NUMBER and DESCRIPTION	COL 3 ENGINEER'S ESTIMATE QUANTITY	COL 4 UNIT	COL 5 UNIT PRICE AND IN FIGURES DOLLARS	CTS	COL 6 EXTENDED AMOUNT IN FIGURES DOLLARS	CTS
007	**4.07 CC** NEW GRANITE CURB, CORNER	**182.00**	**L.F.**	350	00	63,700	00
008	**4.08 AA** CONCRETE CURB (18" DEEP)	**385.00**	**L.F.**	25	00	9,625	00
009	**4.09 AF** STRAIGHT STEEL FACED CONCRETE CURB (27" DEEP)	**2,791.00**	**L.F.**	200	00	558,200	00
010	**4.09 BF** DEPRESSED STEEL FACED CONCRETE CURB (27" DEEP)	**66.00**	**L.F.**	200	00	13,200	00
011	**4.09 CF** CORNER STEEL FACED CONCRETE CURB (27" DEEP)	**299.00**	**L.F.**	300	00	89,700	00
012	**4.09 SBSAJ** STRAIGHT STEEL FACED CONCRETE CURB FOR SBS STATIONS (30.5" DEEP)	**550.00**	**L.F.**	350	00	192,500	00

NEW YORK CITY DEPARTMENT OF DESIGN AND CONSTRUCTION
DIVISION OF INFRASTRUCTURE - BUREAU OF DESIGN

PROJECT ID: HWMM008
CONTRACT PIN: 8502013HW0020C

BID SCHEDULE FORM

COL. 1 SEQ. NO.	COL. 2 ITEM NUMBER and DESCRIPTION	COL. 3 ENGINEER'S ESTIMATE OF QUANTITY	COL. 4 UNIT	COL. 5 UNIT PRICE (IN FIGURES) DOLLARS	CTS	COL. 6 EXTENDED AMOUNT (IN FIGURES) DOLLARS	CTS
013	**4.09 SBSCJ** CORNER STEEL FACED CONCRETE CURB FOR SBS STATIONS (30.5" DEEP)	58.00	L.F.	800	00	46,400	00
014	**4.11 CA** FILL, PLACE MEASUREMENT	385.00	C.Y.	0	10	38	50
015	**4.13 AAS** 4" CONCRETE SIDEWALK (UNPIGMENTED)	30,876.00	S.F.	18	00	555,768	00
016	**4.13 BAS** 7" CONCRETE SIDEWALK (UNPIGMENTED)	5,011.00	S.F.	25	00	125,275	00
017	**4.13 DE** EMBEDDED PREFORMED DETECTABLE WARNING UNITS	352.00	S.F.	5	00	1,760	00
018	**4.13 DSBS** EMBEDDED PRECAST CONCRETE DETECTABLE WARNING PAVERS FOR SBS STATIONS	1,395.00	S.F.	75	00	104,625	00

NEW YORK CITY DEPARTMENT OF DESIGN AND CONSTRUCTION
DIVISION OF INFRASTRUCTURE - BUREAU OF DESIGN

PROJECT ID: HWMM008
CONTRACT PIN: 8502013HW0020C

BID SCHEDULE FORM

COL. 1 SEQ. NO	COL. 2 ITEM NUMBER and DESCRIPTION	COL. 3 ENGINEER'S ESTIMATE OF QUANTITY	COL. 4 UNIT	COL. 5 UNIT PRICE (IN FIGURES) DOLLARS	CTS	COL. 6 EXTENDED AMOUNT (IN FIGURES) DOLLARS	CTS
019	**4.14** STEEL REINFORCEMENT BARS	1,320.00	LBS.	1	00	1,320	00
020	**4.15 SS** STRUCTURAL SOIL FOUNDATION MATERIAL	247.00	C.Y.	200	00	49,400	00
021	**4.16 AA** TREES REMOVED (4" TO UNDER 12" CALIPER)	3.00	EACH	450	00	1,350	00
022	**4.16 BA405** TREES PLANTED, 2-1/2" TO 3" CALIPER, ALL TYPES, IN 4' X 5' TREE PITS	2.00	EACH	950	00	1,900	00
023	**4.16 BA510** TREES PLANTED, 2-1/2" TO 3" CALIPER, ALL TYPES, IN 5' X 10' TREE PITS	5.00	EACH	950	00	4,750	00
024	**4.16 BA515** TREES PLANTED, 2-1/2" TO 3" CALIPER, ALL TYPES, IN 5' X 15' TREE PITS	8.00	EACH	950	00	7,600	00

NEW YORK CITY DEPARTMENT OF DESIGN AND CONSTRUCTION
DIVISION OF INFRASTRUCTURE - BUREAU OF DESIGN

PROJECT ID: HWMM008
CONTRACT PIN: 8502013HW0020C

BID SCHEDULE FORM

COL. 1 SEQ. NO	COL. 2 ITEM NUMBER and DESCRIPTION	COL. 3 ENGINEER'S ESTIMATE OF QUANTITY	COL. 4 UNIT	COL. 5 UNIT PRICE (IN FIGURES) DOLLARS	CTS	COL. 6 EXTENDED AMOUNT (IN FIGURES) DOLLARS	CTS
025	**4.16 BA520** TREES PLANTED, 2-1/2" TO 3" CALIPER, ALL TYPES, IN 5' X 20' TREE PITS	1.00	EACH	950	00	950	00
026	**4.16 BA525** TREES PLANTED, 2-1/2" TO 3" CALIPER, ALL TYPES, IN 5' X 25' TREE PITS	1.00	EACH	950	00	950	00
027	**4.17 AC** SHRUBS PLANTED, 18" TO 24" HIGH, ALL TYPES	304.00	EACH	175	00	53,200	00
028	**4.17 FB** FLOWERING BULB, PLANTED, ALL TYPES	2,759.00	EACH	2	50	6,897	50
029	**4.17 IG** SHRUBS PLANTED, 2-1/2 TO 3 FEET HIGH, ILEX GLABRA	37.00	EACH	300	00	11,100	00
030	**4.17 OG3G** ORNAMENTAL GRASS PLANTED, 3 GALLON	301.00	EACH	100	00	30,100	00

NEW YORK CITY DEPARTMENT OF DESIGN AND CONSTRUCTION
DIVISION OF INFRASTRUCTURE - BUREAU OF DESIGN

PROJECT ID: HWMM008
CONTRACT PIN: 8502013HW0020C

BID SCHEDULE FORM

COL. 1 SEC. NO	COL. 2 ITEM NUMBER and DESCRIPTION	COL. 3 ENGINEER'S ESTIMATE QUANTITY	COL. 4 UNIT	COL. 5 UNIT PRICE (IN FIGURES) DOLLARS	CTS	COL. 6 EXTENDED AMOUNT (IN FIGURES) DOLLARS	CTS
031	**4.17 PG1G** PERENNIALS OR GROUNDCOVERS, PLANTED, 1 GALLON, ALL TYPES	204.00	EACH	65	00	13,260	00
032	**4.17 RAGL** SHRUBS PLANTED, RHUS AROMATICA "GLO-LOW"	33.00	EACH	125	00	4,125	00
033	**4.18 A** MAINTENANCE TREE PRUNING (UNDER 12" CAL.)	26.00	EACH	125	00	3,250	00
034	**4.18 RP** ROOT PRUNING	3.00	EACH	200	00	600	00
035	**4.21** TREE CONSULTANT	154.00	P/HR	75	00	11,550	00
036	**51.23RF** REPLACEMENT OF EXISTING MANHOLE FRAME AND COVER	4.00	EACH	1,000	00	4,000	00

NEW YORK CITY DEPARTMENT OF DESIGN AND CONSTRUCTION
DIVISION OF INFRASTRUCTURE - BUREAU OF DESIGN

PROJECT ID: HWMM008
CONTRACT PIN: 8502013HW0020C

BID SCHEDULE FORM

COL 1 SEQ. NO	COL 2 ITEM NUMBER and DESCRIPTION	COL 3 ENGINEER'S ESTIMATE QUANTITY	COL 4 UNIT	COL 5 UNIT PRICE (IN FIGURES) DOLLARS	CTS	COL 6 EXTENDED AMOUNT (IN FIGURES) DOLLARS	CTS
037	**51.41S001** STANDARD CATCH BASIN, TYPE 1	7.00	EACH	4,000	00	28,000	00
038	**51.41S002** STANDARD CATCH BASIN, TYPE 2	2.00	EACH	4,000	00	8,000	00
039	**51.42S1SO** INCREMENTAL COST OF STANDARD CATCH BASIN TYPE 3 WITH CURB PIECE IN LIEU OF STANDARD CATCH BASIN TYPE 1	1.00	EACH	4,000	00	4,000	00
040	**52.11D12** 12" DUCTILE IRON PIPE BASIN CONNECTION	426.00	L.F.	250	00	106,500	00
041	**55.11AB** ABANDONING BASINS AND INLETS	5.00	EACH	100	00	500	00
042	**6.02 AAN** UNCLASSIFIED EXCAVATION	3,370.00	C.Y.	2	00	6,740	00

NEW YORK CITY DEPARTMENT OF DESIGN AND CONSTRUCTION
DIVISION OF INFRASTRUCTURE - BUREAU OF DESIGN

PROJECT ID: HWMM008
CONTRACT PIN: 8502013HW0020C

BID SCHEDULE FORM

COL 1 SEQ. NO	COL 2 ITEM NUMBER and DESCRIPTION	COL 3 ENGINEER'S ESTIMATE OF QUANTITY	COL 4 UNIT	COL 5 UNIT PRICE (IN FIGURES) DOLLARS	CTS	COL 6 EXTENDED AMOUNT (IN FIGURES) DOLLARS	CTS
043	**6.02 PA** PNEUMATIC EXCAVATION AROUND TREES	205.00	C.Y.	7	00	1,435	00
044	**6.02 XHEC** INCREMENTAL COST FOR MODIFYING WORK METHODS NEAR (WITHIN 3 FEET OF) TRANSIT FACILITIES AND BUILDING VAULTS	48.00	C.Y.	25	00	1,200	00
045	**6.02 XSCW** INCREMENTAL COST FOR USING SPECIAL CARE WORK METHODS NEAR (FROM 3 FEET TO 50 FEET) TRANSIT FACILITIES	83.00	C.Y.	35	00	2,905	00
046	**6.06 AC** GRANITE BLOCK SIDEWALK (SAND AND GROUTED JOINTS)(FURNISH BLOCK)	215.00	S.Y.	300	00	64,500	00
047	**6.11 CA** MANHOLES, MODIFIED (GRADE CHANGE)	2.00	EACH	1,500	00	3,000	00
048	**6.23 AB** REMOVE EXISTING FIRE ALARM POST	2.00	EACH	440	00	880	00

NEW YORK CITY DEPARTMENT OF DESIGN AND CONSTRUCTION
DIVISION OF INFRASTRUCTURE - BUREAU OF DESIGN

PROJECT ID: HWMM008
CONTRACT PIN: 8502013HW0020C

BID SCHEDULE FORM

COL. 1 SEC. NO	COL. 2 ITEM NUMBER and DESCRIPTION	COL. 3 ENGINEER'S ESTIMATE OF QUANTITY	COL. 4 UNIT	COL. 5 UNIT PRICE (IN FIGURES) DOLLARS	CTS	COL. 6 EXTENDED AMOUNT (IN FIGURES) DOLLARS	CTS
049	**6.23 BA** FURNISH AND INSTALL FIRE ALARM POST AND SUBBASE IN ACCORDANCE WITH F.D. STD. DWG. #141	2.00	EACH	1,700	00	3,400	00
050	**6.23 BD** FURNISH AND INSTALL 4-PAIR FIRE ALARM CABLE	250.00	L.F.	8	00	2,000	00
051	**6.23 BFC** FURNISH AND INSTALL FIRE DEPARTMENT 12 WIRE TERMINAL BOX AND TERMINATE FIRE ALARM CABLES	2.00	EACH	1,300	00	2,600	00
052	**6.23 BGSE** FURNISH AND INSTALL 4" P.V.C. CONDUIT, SCHEDULE 40, U.L. 651 (WITH PAVEMENT EXCAVATION)	60.00	L.F.	15	00	900	00
053	**6.23 BHE** FURNISH AND INSTALL 4" 90-DEGREE P.V.C. WIDE BEND, SCHEDULE 40, U.L. 651 (WITH PAVEMENT EXCAVATION) IN ACCORDANCE WITH F.D. STD. DWG. #141 OR #145AA	2.00	EACH	260	00	520	00
054	**6.23 BP** FURNISH AND INSTALL FIRE ALARM PEDESTAL BUMPERS (2 REQUIRED PER SET) IN ACCORDANCE WITH F.D. STD. DWG. #168	2.00	SETS	200	00	400	00

NEW YORK CITY DEPARTMENT OF DESIGN AND CONSTRUCTION
DIVISION OF INFRASTRUCTURE - BUREAU OF DESIGN

PROJECT ID: HWMM008
CONTRACT PIN: 8502013HW0020C

BID SCHEDULE FORM

COL. 1 SEQ. NO	COL. 2 ITEM NUMBER and DESCRIPTION	COL. 3 ENGINEER'S ESTIMATE OF QUANTITY	COL. 4 UNIT	COL. 5 UNIT PRICE (IN FIGURES) DOLLARS	CTS	COL. 6 EXTENDED AMOUNT (IN FIGURES) DOLLARS	CTS
055	**6.25 RS** TEMPORARY SIGNS	233.00	S.F.	5	00	1,165	00
056	**6.26** TIMBER CURB	10,697.00	L.F.	1	20	12,836	40
057	**6.27 DBI** DEMOLITION, REMOVAL AND DISPOSAL OF BICYCLE RACK	11.00	EACH	50	00	550	00
058	**6.36 DR** STRUCTURAL REPAIR AND ADJUSTMENT OF UTILITY STRUCTURES	3.00	C.Y.	100	00	300	00
059	**6.40 C** ENGINEER'S FIELD OFFICE (TYPE C)	18.00	MONTH	20,000	00	360,000	00
060	**6.43** PHOTOGRAPHS	792.00	SETS	20	00	15,840	00

NEW YORK CITY DEPARTMENT OF DESIGN AND CONSTRUCTION
DIVISION OF INFRASTRUCTURE - BUREAU OF DESIGN

PROJECT ID: HWMM008
CONTRACT PIN: 8502013HW0020C

BID SCHEDULE FORM

COL. 1 SEQ. NO	COL. 2 ITEM NUMBER and DESCRIPTION	COL. 3 ENGINEER'S ESTIMATE OF QUANTITY	COL. 4 UNIT	COL. 5 UNIT PRICE (IN FIGURES) DOLLARS	CTS.	COL. 6 EXTENDED AMOUNT (IN FIGURES) DOLLARS	CTS.
061	6.44 THERMOPLASTIC REFLECTORIZED PAVEMENT MARKINGS (4" WIDE)	41,082.00	L.F.	1	00	41,082	00
062	6.49 TEMPORARY PAVEMENT MARKINGS (4" WIDE)	2,200.00	L.F.	0	85	1,870	00
063	6.50 CLEANING OF DRAINAGE STRUCTURES	14.00	EACH	200	00	2,800	00
064	6.52 FED UNIFORMED FLAGPERSON PRICE BID SHALL BE FOR THE FIXED SUM OF $ 157,890.00	1.00	F.S.	157,890	00	157,890	00
065	6.53 REMOVE EXISTING LANE MARKINGS (4" WIDE)	12,358.00	L.F.	0	60	7,414	80

NEW YORK CITY DEPARTMENT OF DESIGN AND CONSTRUCTION
DIVISION OF INFRASTRUCTURE - BUREAU OF DESIGN

PROJECT ID: HWMM008
CONTRACT PIN: 8502013HW0020C

BID SCHEDULE FORM

COL. 1 SEQ. NO	COL. 2 ITEM NUMBER and DESCRIPTION	COL. 3 ENGINEER'S ESTIMATE OF QUANTITY	COL. 4 UNIT	COL. 5 UNIT PRICE (IN FIGURES) DOLLARS	CTS	COL. 6 EXTENDED AMOUNT (IN FIGURES) DOLLARS	CTS
066	6.55 SAWCUTTING EXISTING PAVEMENT	5,084.00	L.F.	0	35	1,779	40
067	6.67 SUBBASE COURSE, SELECT GRANULAR MATERIAL	21.00	C.Y.	100	00	2,100	00
068	6.68 PLASTIC FILTER FABRIC	124.00	S.Y.	10	00	1,240	00
069	6.75 GRINDING EXISTING ASPHALTIC CONCRETE WEARING COURSE	49.00	C.Y.	150	00	7,350	00
070	6.77 R METAL TRASH RECEPTACLE	11.00	EACH	1,500	00	16,500	00
071	6.82 A REMOVING EXISTING TRAFFIC AND STREET NAME SIGNS	369.00	S.F.	1	00	369	00

NEW YORK CITY DEPARTMENT OF DESIGN AND CONSTRUCTION
DIVISION OF INFRASTRUCTURE - BUREAU OF DESIGN

PROJECT ID: HWMM008
CONTRACT PIN: 8502013HW0020C

BID SCHEDULE FORM

COL. 1 SEQ. NO	COL. 2 ITEM NUMBER and DESCRIPTION	COL. 3 ENGINEER'S ESTIMATE OF QUANTITY	COL. 4 UNIT	COL. 5 UNIT PRICE (IN FIGURES) DOLLARS	CTS	COL. 6 EXTENDED AMOUNT (IN FIGURES) DOLLARS	CTS
072	**6.82 B** REMOVING EXISTING TRAFFIC AND STREET NAME SIGN POSTS	396.00	L.F.	1	00	396	00
073	**6.83 AA** FURNISHING NEW NON-REFLECTORIZED TRAFFIC SIGNS	132.00	S.F.	5	00	660	00
074	**6.83 AB** FURNISHING NEW TRAFFIC SIGN POSTS	396.00	L.F.	10	00	3,960	00
075	**6.83 AR** FURNISHING NEW REFLECTORIZED TRAFFIC SIGNS	163.00	S.F.	15	00	2,445	00
076	**6.83 BA** INSTALLING TRAFFIC SIGNS	295.00	S.F.	5	00	1,475	00
077	**6.83 BB** INSTALLING TRAFFIC SIGN POSTS	396.00	L.F.	10	00	3,960	00

NEW YORK CITY DEPARTMENT OF DESIGN AND CONSTRUCTION
DIVISION OF INFRASTRUCTURE - BUREAU OF DESIGN

PROJECT ID: HWMM008
CONTRACT PIN: 8502013HW0020C

BID SCHEDULE FORM

COL. 1 SEQ. NO	COL. 2 ITEM NUMBER and DESCRIPTION	COL. 3 ENGINEER'S ESTIMATE OF QUANTITY	COL. 4 UNIT	COL. 5 UNIT PRICE (IN FIGURES) DOLLARS	CTS	COL. 6 EXTENDED AMOUNT (IN FIGURES) DOLLARS	CTS
078	6.84 B LOLLIPOP TYPE BUS STOP SIGNS PRICE BID SHALL BE FOR THE FIXED SUM OF $ 8,000.00	1.00	F.S.	8,000	00	8,000	00
079	6.85 A TRAFFIC ENFORCEMENT AGENTS PRICE BID SHALL BE FOR THE FIXED SUM OF $ 1,949,882.06	1.00	F.S.	1,949,882	06	1,949,882	06
080	6.86 AA FURNISHING NEW STREET NAME SIGNS	75.00	S.F.	15	00	1,125	00
081	6.86 BA INSTALLING STREET NAME SIGNS	75.00	S.F.	15	00	1,125	00
082	6.87 PLASTIC BARRELS	5,317.00	EACH	0	75	3,987	75

NEW YORK CITY DEPARTMENT OF DESIGN AND CONSTRUCTION
DIVISION OF INFRASTRUCTURE - BUREAU OF DESIGN

PROJECT ID: HWMM008
CONTRACT PIN: 8502013HW0020C

BID SCHEDULE FORM

COL 1 SEQ. NO	COL 2 ITEM NUMBER and DESCRIPTION	COL 3 ENGINEER'S ESTIMATE OF QUANTITY	COL 4 UNIT	COL 5 UNIT PRICE (IN FIGURES) DOLLARS	CTS	COL 6 EXTENDED AMOUNT (IN FIGURES) DOLLARS	CTS
083	6.91 REFLECTIVE CRACKING MEMBRANE (18" WIDE)	5,084.00	L.F.	2	00	10,168	00
084	6.94 TFD THRU-FLOW TRENCH DRAIN	104.00	L.F.	300	00	31,200	00
085	6.99 AUDIO AND VIDEO DOCUMENTATION SURVEY	1.00	L.S.	20,000	00	20,000	00
086	60.11R606 FURNISHING AND DELIVERING 6-INCH DUCTILE IRON RESTRAINED JOINT PIPE (CLASS 56)	385.00	L.F.	40	00	15,400	00
087	60.11R612 FURNISHING AND DELIVERING 12-INCH DUCTILE IRON RESTRAINED JOINT PIPE (CLASS 56)	5,280.00	L.F.	85	00	448,800	00
088	60.12D06 LAYING 6-INCH DUCTILE IRON PIPE AND FITTINGS	435.00	L.F.	200	00	87,000	00

NEW YORK CITY DEPARTMENT OF DESIGN AND CONSTRUCTION
DIVISION OF INFRASTRUCTURE - BUREAU OF DESIGN

PROJECT ID: HWMM008
CONTRACT PIN: 8502013HW0020C

BID SCHEDULE FORM

COL. 1 SEQ. NO	COL. 2 ITEM NUMBER and DESCRIPTION	COL. 3 ENGINEER'S ESTIMATE OF QUANTITY	COL. 4 UNIT	COL. 5 UNIT PRICE (IN FIGURES) DOLLARS	CTS	COL. 6 EXTENDED AMOUNT (IN FIGURES) DOLLARS	CTS
089	**60.12D12** LAYING 12-INCH DUCTILE IRON PIPE AND FITTINGS	5,379.00	L.F.	250	00	1,344,750	00
090	**60.13M0A24** FURNISHING AND DELIVERING DUCTILE IRON MECHANICAL JOINT 24 -INCH DIAMETER AND SMALLER FITTINGS, INCLUDING WEDGE TYPE RETAINER GLANDS	4.00	TONS	8,000	00	32,000	00
091	**61.11DMM06** FURNISHING AND DELIVERING 6-INCH MECHANICAL JOINT DUCTILE IRON GATE VALVE COMPLETE WITH WEDGE TYPE RETAINER GLANDS	18.00	EACH	1,200	00	21,600	00
092	**61.11DMM12** FURNISHING AND DELIVERING 12-INCH MECHANICAL JOINT DUCTILE IRON GATE VALVE COMPLETE WITH WEDGE TYPE RETAINER GLANDS	32.00	EACH	3,000	00	96,000	00
093	**61.11TWC03** FURNISHING AND DELIVERING 3-INCH WET CONNECTION TAPPING VALVE COMPLETE WITH WEDGE TYPE RETAINER GLANDS	40.00	EACH	1,000	00	40,000	00

NEW YORK CITY DEPARTMENT OF DESIGN AND CONSTRUCTION
DIVISION OF INFRASTRUCTURE - BUREAU OF DESIGN

PROJECT ID: HWMM008
CONTRACT PIN: 8502013HW0020C

BID SCHEDULE FORM

COL. 1 SEQ. NO	COL. 2 ITEM NUMBER and DESCRIPTION	COL. 3 ENGINEER'S ESTIMATE OF QUANTITY	COL. 4 UNIT	COL. 5 UNIT PRICE (IN FIGURES) DOLLARS	CTS	COL. 6 EXTENDED AMOUNT (IN FIGURES) DOLLARS	CTS
094	**61.11TWC12** FURNISHING AND DELIVERING 12-INCH WET CONNECTION TAPPING VALVE COMPLETE WITH WEDGE TYPE RETAINER GLANDS	12.00	EACH	2,500	00	30,000	00
095	**61.12DMM06** SETTING 6-INCH MECHANICAL JOINT DUCTILE IRON GATE VALVE COMPLETE WITH WEDGE TYPE RETAINER GLANDS	18.00	EACH	100	00	1,800	00
096	**61.12DMM12** SETTING 12-INCH MECHANICAL JOINT DUCTILE IRON GATE VALVE COMPLETE WITH WEDGE TYPE RETAINER GLANDS	32.00	EACH	100	00	3,200	00
097	**61.12TWC03** SETTING 3-INCH WET CONNECTION TAPPING VALVE COMPLETE WITH WEDGE TYPE RETAINER GLANDS	40.00	EACH	300	00	12,000	00
098	**61.12TWC12** SETTING 12-INCH WET CONNECTION TAPPING VALVE COMPLETE WITH WEDGE TYPE RETAINER GLANDS	12.00	EACH	1,000	00	12,000	00
099	**62.11SD** FURNISHING AND DELIVERING HYDRANTS	13.00	EACH	3,000	00	39,000	00

NEW YORK CITY DEPARTMENT OF DESIGN AND CONSTRUCTION
DIVISION OF INFRASTRUCTURE - BUREAU OF DESIGN

PROJECT ID: HWMM008
CONTRACT PIN: 8502013HW0020C

BID SCHEDULE FORM

COL. 1 SEQ. NO	COL. 2 ITEM NUMBER and DESCRIPTION	COL. 3 ENGINEER'S ESTIMATE OF QUANTITY	COL. 4 UNIT	COL. 5 UNIT PRICE (IN FIGURES) DOLLARS	CTS	COL. 6 EXTENDED AMOUNT (IN FIGURES) DOLLARS	CTS
100	**62.11SS** FURNISHING AND DELIVERING HYDRANTS - SMITH TYPE (S-2-LP)	5.00	EACH	3,000	00	15,000	00
101	**62.12SG** SETTING HYDRANTS COMPLETE WITH WEDGE TYPE RETAINER GLANDS	18.00	EACH	1,500	00	27,000	00
102	**62.13RH** REMOVING HYDRANTS	19.00	EACH	100	00	1,900	00
103	**62.14FD** FURNISHING, DELIVERING AND INSTALLING HYDRANT FENDERS WITH DECORATIVE CAPS (BLACK)	10.00	EACH	400	00	4,000	00
104	**62.14FS** FURNISHING, DELIVERING AND INSTALLING HYDRANT FENDERS	26.00	EACH	200	00	5,200	00
105	**63.11VC** FURNISHING AND DELIVERING VARIOUS CASTINGS	5.00	TONS	100	00	500	00

NEW YORK CITY DEPARTMENT OF DESIGN AND CONSTRUCTION
DIVISION OF INFRASTRUCTURE - BUREAU OF DESIGN

PROJECT ID: HWMM008
CONTRACT PIN: 8502013HW0020C

BID SCHEDULE FORM

COL. 1 SEQ. NO.	COL. 2 ITEM NUMBER and DESCRIPTION	COL. 3 ENGINEER'S ESTIMATE OF QUANTITY	COL. 4 UNIT	COL. 5 UNIT PRICE (IN FIGURES) DOLLARS	CTS	COL. 6 EXTENDED AMOUNT (IN FIGURES) DOLLARS	CTS
106	**64.12COEG** CUTTING AND OFFSETTING HOUSE SERVICE WATER CONNECTIONS (EQUAL TO OR GREATER THAN 3-INCH DIAMETER)	699.00	L.F.	40	00	27,960	00
107	**64.12ESEG** EXTENDING HOUSE SERVICE WATER CONNECTIONS (EQUAL TO OR GREATER THAN 3-INCH DIAMETER)	605.00	L.F.	45	00	27,225	00
108	**64.13WC12** FURNISHING, DELIVERING AND INSTALLING WET CONNECTION SLEEVE ON 12-INCH WATER MAIN PIPE WITH VARIOUS OUTLETS	16.00	EACH	1,000	00	16,000	00
109	**65.11BR** FURNISHING, DELIVERING AND INSTALLING BANDS, RODS, WASHERS, ETC., COMPLETE, FOR RESTRAINING JOINTS	1,100.00	LBS.	8	00	8,800	00
110	**65.21PS** FURNISHING AND PLACING POLYETHYLENE SLEEVE **Unit price bid shall not be less than: $ 0.50**	5,280.00	L.F.	0	50	2,640	00
111	**65.31FF** FURNISHING, DELIVERING AND PLACING FILTER FABRIC **Unit price bid shall not be less than: $ 0.10**	45,100.00	S.F.	0	10	4,510	00

NEW YORK CITY DEPARTMENT OF DESIGN AND CONSTRUCTION
DIVISION OF INFRASTRUCTURE - BUREAU OF DESIGN

PROJECT ID: HWMM008
CONTRACT PIN: 8502013HW0020C

BID SCHEDULE FORM

COL. 1 SEQ. NO	COL. 2 ITEM NUMBER and DESCRIPTION	COL. 3 ENGINEER'S ESTIMATE OF QUANTITY	COL. 4 UNIT	COL. 5 UNIT PRICE (IN FIGURES) DOLLARS	CTS	COL. 6 EXTENDED AMOUNT (IN FIGURES) DOLLARS	CTS
112	**65.71SG** FURNISHING, DELIVERING AND PLACING SCREENED GRAVEL OR SCREENED BROKEN STONE BEDDING	363.00	C.Y.	15	00	5,445	00
113	**670.2002** GALVANIZED STEEL CONDUIT, 1"	402.00	L.F.	40	00	16,080	00
114	**7.12 A** PROCTOR ANALYSIS	36.00	EACH	300	00	10,800	00
115	**7.12 B** IN-PLACE SOIL DENSITY TEST	108.00	EACH	300	00	32,400	00
116	**7.13 B** MAINTENANCE OF SITE **Unit price bid shall not be less than: $ 8,600.00**	12.00	MONTH	15,000	00	180,000	00
117	**7.19** LOAD TRANSFER JOINT	312.00	L.F.	3	00	936	00

NEW YORK CITY DEPARTMENT OF DESIGN AND CONSTRUCTION
DIVISION OF INFRASTRUCTURE - BUREAU OF DESIGN

PROJECT ID: HWMM008
CONTRACT PIN: 8502013HW0020C

BID SCHEDULE FORM

COL. 1 SEQ. NO	COL. 2 ITEM NUMBER and DESCRIPTION	COL. 3 ENGINEER'S ESTIMATE OF QUANTITY	COL. 4 UNIT	COL. 5 UNIT PRICE (IN FIGURES) DOLLARS	CTS	COL. 6 EXTENDED AMOUNT (IN FIGURES) DOLLARS	CTS
118	**7.36** PEDESTRIAN STEEL BARRICADES	8,228.00	L.F.	0	35	2,879	80
119	**7.49 A** STEEL TREE PIT GUARD TYPE A	1,340.00	L.F.	145	00	194,300	00
120	**7.50 CB** CITY BENCH WITH BACK	10.00	EACH	4,000	00	40,000	00
121	**7.50 TLB** TRANSIT LEANING BAR	7.00	EACH	6,000	00	42,000	00
122	**7.54 R** REMOVAL OF EXISTING TREE GRATES AND FRAMES	57.00	EACH	50	00	2.850	00
123	**7.54 RS** RESETTING OF EXISTING TREE GRATES AND FRAMES	1.00	EACH	300	00	300	00

NEW YORK CITY DEPARTMENT OF DESIGN AND CONSTRUCTION
DIVISION OF INFRASTRUCTURE - BUREAU OF DESIGN

PROJECT ID: HWMM008
CONTRACT PIN: 8502013HW0020C

BID SCHEDULE FORM

COL 1 SEQ. NO	COL 2 ITEM NUMBER and DESCRIPTION	COL 3 ENGINEER'S ESTIMATE OF QUANTITY	COL 4 UNIT	COL 5 UNIT PRICE (IN FIGURES) DOLLARS	CTS	COL 6 EXTENDED AMOUNT (IN FIGURES) DOLLARS	CTS
124	**7.88 AA** RODENT INFESTATION SURVEY AND MONITORING **Unit price bid shall not be less than: $ 1,000.00**	1.00	L.S.	25,000	00	25,000	00
125	**7.88 AB** RODENT BAIT STATIONS **Unit price bid shall not be less than: $ 60.00**	36.00	EACH	100	00	3,600	00
126	**7.88 AC** BAITING OF RODENT BAIT STATIONS **Unit price bid shall not be less than: $ 9.25**	36.00	EACH	25	00	900	00
127	**7.88 AD** WATERBUG BAIT APPLICATIONS **Unit price bid shall not be less than: $ 65.00**	53.00	BLOCK	100	00	5,300	00
128	**70.61RE** ROCK EXCAVATION	50.00	C.Y.	800	00	40,000	00
129	**70.71SB** STONE BALLAST **Unit price bid shall not be less than: $ 15.00**	99.00	C.Y.	15	00	1,485	00

NEW YORK CITY DEPARTMENT OF DESIGN AND CONSTRUCTION
DIVISION OF INFRASTRUCTURE - BUREAU OF DESIGN

PROJECT ID: HWMM008
CONTRACT PIN: 8502013HW0020C

BID SCHEDULE FORM

COL. 1 SEQ. NO.	COL. 2 ITEM NUMBER and DESCRIPTION	COL. 3 ENGINEER'S ESTIMATE OF QUANTITIY	COL. 4 UNIT	COL. 5 UNIT PRICE (IN FIGURES) DOLLARS	CTS	COL. 6 EXTENDED AMOUNT (IN FIGURES) DOLLARS	CTS
130	**70.81CB** CLEAN BACKFILL **Unit price bid shall not be less than: $ 15.00**	1,430.00	C.Y.	15	00	21,450	00
131	**70.91SW12** FURNISHING AND PLACING SHEETING AND BRACING IN TRENCH FOR WATER MAIN PIPE 12-INCH IN DIAMETER AND LESS	5,500.00	S.F.	0	35	1,925	00
132	**72.11HF** HYDRAULIC FILL FOR ABANDONED SEWERS AND WATER MAINS	77.00	C.Y.	35	00	2,695	00
133	**73.11AB** ADDITIONAL BRICK MASONRY **Unit price bid shall not be less than: $ 62.50**	30.00	C.Y.	62	50	1,875	00
134	**73.21AC** ADDITIONAL CONCRETE **Unit price bid shall not be less than: $ 62.50**	30.00	C.Y.	62	50	1,875	00
135	**73.31AE0** ADDITIONAL EARTH EXCAVATION INCLUDING TEST PITS (ALL DEPTHS) **Unit price bid shall not be less than: $ 20.00**	627.00	C.Y.	20	00	12,540	00

NEW YORK CITY DEPARTMENT OF DESIGN AND CONSTRUCTION
DIVISION OF INFRASTRUCTURE - BUREAU OF DESIGN

PROJECT ID: HWMM008
CONTRACT PIN: 8502013HW0020C

BID SCHEDULE FORM

COL. 1 SEC. NO.	COL. 2 ITEM NUMBER and DESCRIPTION	COL. 3 ENGINEER'S ESTIMATE QUANTITY	COL. 4 UNIT	COL. 5 UNIT PRICE (IN FIGURES) DOLLARS	COL. 5 CTS	COL. 6 EXTENDED AMOUNT (IN FIGURES) DOLLARS	COL. 6 CTS
136	**73.41AG** ADDITIONAL SELECT GRANULAR BACKFILL **Unit price bid shall not be less than: $ 15.00**	50.00	C.Y.	15	00	750	00
137	**73.51AS** ADDITIONAL STEEL REINFORCING BARS **Unit price bid shall not be less than: $ 1.00**	990.00	LBS.	1	00	990	00
138	**8.02 A** SPECIAL CARE EXCAVATION AND RESTORATION FOR SIDEWALK WORK	20,213.00	S.F.	0	35	7,074	55
139	**8.02 B** SPECIAL CARE EXCAVATION AND RESTORATION FOR CURB WORK	3,072.00	L.F.	0	35	1,075	20
140	**8.08** VARIABLE MESSAGE BOARD	2.00	EACH	15,000	00	30,000	00
141	**8.52 FP** STEEL FOUNDATION PLATE	1,304.00	LBS.	15	00	19,560	00

NEW YORK CITY DEPARTMENT OF DESIGN AND CONSTRUCTION
DIVISION OF INFRASTRUCTURE - BUREAU OF DESIGN

PROJECT ID: HWMM008
CONTRACT PIN: 8502013HW0020C

BID SCHEDULE FORM

COL 1 SEQ. NO	COL 2 ITEM NUMBER and DESCRIPTION	COL 3 ENGINEER'S ESTIMATE OF QUANTITIY	COL 4 UNIT	COL 5 UNIT PRICE (IN FIGURES) DOLLARS	COL 5 CTS	COL 6 EXTENDED AMOUNT (IN FIGURES) DOLLARS	COL 6 CTS
142	8.52 PT-B PAVING TRAY (AREA TOTEM)	4.00	EACH	1,500	00	6,000	00
143	8.52 PT-C PAVING TRAY (NEIGHBOURHOOD TOTEM)	4.00	EACH	2,000	00	8,000	00
144	9.04 HW ALLOWANCE FOR ANTI-FREEZE ADDITIVE IN CONCRETE PRICE BID SHALL BE FOR THE FIXED SUM OF $ 50,000.00	1.00	F.S.	50,000	00	50,000	00
145	9.99 FLASHING ARROW BOARD	3.00	EACH	4,000	00	12,000	00
146	HW-914 ALLOWANCE FOR WAYFINDING TOTEMS PRICE BID SHALL BE FOR THE FIXED SUM OF $ 88,000.00	1.00	F.S.	88,000	00	88,000	00

NEW YORK CITY DEPARTMENT OF DESIGN AND CONSTRUCTION
DIVISION OF INFRASTRUCTURE - BUREAU OF DESIGN

PROJECT ID: HWMM008
CONTRACT PIN: 8502013HW0020C

BID SCHEDULE FORM

COL. 1 SEQ. NO	COL. 2 ITEM NUMBER and DESCRIPTION	COL. 3 ENGINEER'S ESTIMATE OF QUANTITY	COL. 4 UNIT	COL. 5 UNIT PRICE (IN FIGURES) DOLLARS	CTS	COL. 6 EXTENDED AMOUNT (IN FIGURES) DOLLARS	CTS
147	**PK-473** DECOMPACT EXISTING TREE	62.00	EACH	50	00	3,100	00
148	**SL-20.02.02** FURNISH AND INSTALL STANDARD TYPE ANCHOR BOLT FOUNDATION, AS PER DRAWING E-3788	25.00	EACH	1,000	00	25,000	00
149	**SL-20.08.01** REMOVE STANDARD TYPE ANCHOR BOLT CONCRETE FOUNDATION	4.00	EACH	100	00	400	00
150	**SL-20.08.02** REMOVE FOUNDATION OTHER THAN STANDARD TYPE.	21.00	EACH	500	00	10,500	00
151	**SL-21.03.02** FURNISH AND INSTALL TYPE 2S, 4S, 6S, 8S OR 12S LAMPPOST WITH TRANSFORMER BASE	2.00	EACH	3,000	00	6,000	00
152	**SL-21.03.03** FURNISH AND INSTALL TYPE 2T, 6T, 8T OR 12T LAMPPOST WITH TRANSFORMER BASE	2.00	EACH	3,500	00	7,000	00

NEW YORK CITY DEPARTMENT OF DESIGN AND CONSTRUCTION
DIVISION OF INFRASTRUCTURE - BUREAU OF DESIGN

PROJECT ID: HWMM008
CONTRACT PIN: 8502013HW0020C

BID SCHEDULE FORM

COL. 1 SEQ. NO	COL. 2 ITEM NUMBER and DESCRIPTION	COL. 3 ENGINEER'S ESTIMATE OF QUANTITY	COL. 4 UNITS	COL. 5 UNIT PRICE (IN FIGURES) DOLLARS	CTS	COL. 6 EXTENDED AMOUNT (IN FIGURES) DOLLARS	CTS
153	SL-21.04.02 FURNISH AND INSTALL TYPE "BC" LAMPPOST WITH PHOTOELECTRIC CONTROL RECEPTACLE	21.00	EACH	11,000	00	231,000	00
154	SL-21.09.05 REMOVE FABRICATED STEEL, ALUMINUM NO. 10, ETC. LAMPPOST, WITH ARM(S), LUMINAIRE(S), ETC., WITH ALL ATTACHMENTS, IF ANY.	4.00	EACH	800	00	3,200	00
155	SL-21.09.06 REMOVE ORNAMENTAL LAMPPOST (TYPE "BC", "M", "F", "5TH AVENUE", "LYRE" GRAND CENTRAL) ON FOUNDATION, WITH ALL ATTACHMENTS, IF ANY. REMOVE PORTION OF FOUNDATION.	21.00	EACH	900	00	18,900	00
156	SL-21.09.08 REMOVE ALL STREET LIGHTING EQUIPMENT FROM TYPE "M-2" TRAFFIC POST (ARM(S), PHOTOELECTRIC CONTROLLER, LUMINAIRE (S), SHAFT EXTENSION, WIRING, ETC.)	9.00	EACH	700	00	6,300	00
157	SL-22.16.05 FURNISH AND INSTALL ROADWAY TYPE LED FIXTURE AS PER SPECIFICATION 466 WITH PEC RECEPTACLE AND PEC	12.00	EACH	800	00	9,600	00

BID SCHEDULE FORM

COL. 1 SEQ. NO.	COL. 2 ITEM NUMBER and DESCRIPTION	COL. 3 ENGINEER'S ESTIMATE OF QUANTITY	COL. 4 UNIT	COL. 5 UNIT PRICE (IN FIGURES) DOLLARS	CTS.	COL. 6 EXTENDED AMOUNT (IN FIGURES) DOLLARS	CTS.
158	**SL-22.16.07** FURNISH AND INSTALL PENDANT TYPE (TEAR DROP) LED FIXTURE	25.00	EACH	2,000	00	50,000	00
159	**SL-24.02.02** FURNISH AND INSTALL FABRICATED STEEL 8 Ft. ARM ON LAMPPOST OR "M-2" TRAFFIC POLE SHAFT EXTENSION.	9.00	EACH	600	00	5,400	00
160	**SL-24.02.03** FURNISH AND INSTALL FABRICATED STEEL 6 Ft. EXTENSION ARM ON LAMPPOST OR "M-2" POLE SHAFT EXTENSION, AS PER DRAWING J-3951.	1.00	EACH	600	00	600	00
161	**SL-24.02.16** FURNISH AND INSTALL FABRICATED STEEL 6 FT. SHAFT EXTENSION (SINGLE ARM) FOR "M-2" TRAFFIC POST AS PER DWGs H-5159 OR H-5255.	3.00	EACH	1,000	00	3,000	00
162	**SL-24.02.33** FURNISH AND INSTALL FABRICATED STEEL 6Ft. SHAFT EXTENSION (TWIN ARMS) FOR "M-2" TRAFFIC POST AS PER DWGs H-5159, OR H-5255.	2.00	EACH	1,500	00	3,000	00

NEW YORK CITY DEPARTMENT OF DESIGN AND CONSTRUCTION
DIVISION OF INFRASTRUCTURE - BUREAU OF DESIGN

PROJECT ID: HWMM008
CONTRACT PIN: 8502013HW0020C

BID SCHEDULE FORM

COL. 1 SEQ. NO.	COL. 2 ITEM NUMBER and DESCRIPTION	COL. 3 ENGINEER'S ESTIMATE OF QUANTITY	COL. 4 UNIT	COL. 5 UNIT PRICE (IN FIGURES) DOLLARS	CTS	COL. 6 EXTENDED AMOUNT (IN FIGURES) DOLLARS	CTS
163	**SL-24.04.01** FURNISH AND INSTALL TYPE "BC" SHAFT EXTENSION AND ARM ASSEMBLY WITH PHOTOELECTRIC CONTROL RECEPTACLE FOR "M-2" TRAFFIC POST, AS PER DRAWING H-5264. M-2 ORNAMENTAL CASTINGS FURNISHED AND INSTALLED BY OTHERS.	4.00	EACH	6,500	00	26,000	00
164	**SL-26.01.01** FURNISH AND INSTALL, OR FURNISH AND REPLACE A PLUG-IN SOLID STATE PHOTOELECTRIC CONTROL	34.00	EACH	100	00	3,400	00
165	**SL-26.06.02** FURNISH AND INSTALL LED FIRE ALARM LUMINAIRES.	1.00	EACH	500	00	500	00
166	**T-1.1** INSTALL TYPE "S" OR "T" FOUNDATION	1.00	EACH	1,200	00	1,200	00
167	**T-1.18** REMOVE TYPE "A", "B", "S" OR "T" SERIES FOUNDATION	1.00	EACH	500	00	500	00

BID SCHEDULE FORM

COL. 1 SEQ. NO	COL. 2 ITEM NUMBER and DESCRIPTION	COL. 3 ENGINEER'S ESTIMATE OF QUANTITY	COL. 4 UNIT	COL. 5 UNIT PRICE (IN FIGURES) DOLLARS	CTS	COL. 6 EXTENDED AMOUNT (IN FIGURES) DOLLARS	CTS
168	T-1.2 INSTALL TYPE "F-1" FOUNDATION	1.00	EACH	1,200	00	1,200	00
169	T-1.20 REMOVE TYPE "M" SERIES FOUNDATION	11.00	EACH	500	00	5,500	00
170	T-1.29 RAISE OR LOWER FOUNDATION TO GRADE	1.00	EACH	1,000	00	1,000	00
171	T-1.3 INSTALL TYPE "M2-5S" FOUNDATION	7.00	EACH	1,500	00	10,500	00
172	T-1.4 INSTALL TYPE "M2-3S" FOUNDATION	2.00	EACH	1,500	00	3,000	00
173	T-1.6 INSTALL TYPE "M2-5T" FOUNDATION	2.00	EACH	1,500	00	3,000	00

NEW YORK CITY DEPARTMENT OF DESIGN AND CONSTRUCTION
DIVISION OF INFRASTRUCTURE - BUREAU OF DESIGN

PROJECT ID: HWMM008
CONTRACT PIN: 8502013HW0020C

BID SCHEDULE FORM

COL. 1 SEQ. NO	COL. 2 ITEM NUMBER and DESCRIPTION	COL. 3 ENGINEER'S ESTIMATE OF QUANTITIY	COL. 4 UNIT	COL. 5 UNIT PRICE (IN FIGURES) DOLLARS	CTS	COL. 6 EXTENDED AMOUNT (IN FIGURES) DOLLARS	CTS
174	T-2.1 INSTALL TYPE "S-1" OR "T-1" SERIES POST	1.00	EACH	300	00	300	00
175	T-2.16 FURNISH, INSTALL, MAINTAIN AND REMOVE TEMPORARY POST OR PYLON WITH SIGNALS	1.00	EACH	1,500	00	1,500	00
176	T-2.2 INSTALL TYPE "S-14" POST	1.00	EACH	500	00	500	00
177	T-2.22 REMOVE TYPE "S-1" OR "T-1" SERIES POST	1.00	EACH	500	00	500	00
178	T-2.24 REMOVE TYPE "M" SERIES POST	11.00	EACH	1,000	00	11,000	00
179	T-2.28 REMOVE MAST ARM FROM ANY POST	10.00	EACH	600	00	6,000	00

NEW YORK CITY DEPARTMENT OF DESIGN AND CONSTRUCTION
DIVISION OF INFRASTRUCTURE - BUREAU OF DESIGN

PROJECT ID: HWMM008
CONTRACT PIN: 8502013HW0020C

BID SCHEDULE FORM

COL. 1 SEQ. NO.	COL. 2 ITEM NUMBER and DESCRIPTION	COL. 3 ENGINEER'S ESTIMATE OF QUANTITY	COL. 4 UNIT	COL. 5 UNIT PRICE (IN FIGURES) DOLLARS	CTS	COL. 6 EXTENDED AMOUNT (IN FIGURES) DOLLARS	CTS
180	**T-2.4** INSTALL TYPE "M-2" POST	11.00	EACH	1,700	00	18,700	00
181	**T-20000** FURNISH TEN FOOT ALUMINUM SIGNAL POST TYPE "S-1"	1.00	EACH	600	00	600	00
182	**T-20020** a) FURNISH 3/4" ANCHOR BOLT ASSEMBLIES FOR S-1 (EACH) (3 REQUIRED PER POST)	3.00	EACH	30	00	90	00
183	**T-20021** b) FURNISH 1" ANCHOR BOLT ASSEMBLIES FOR F-1 (EACH) (4 REQUIRED PER POST)	4.00	EACH	40	00	160	00
184	**T-20160** FURNISH 20 FOOT SIGNAL MAST ARM POLE ASSEMBLY TYPE "M-2"	11.00	EACH	5,200	00	57,200	00
185	**T-20184** a) FURNISH 5' EXTENSION ARM ASSEMBLY WITH FITTINGS	7.00	EACH	450	00	3,150	00

NEW YORK CITY DEPARTMENT OF DESIGN AND CONSTRUCTION
DIVISION OF INFRASTRUCTURE - BUREAU OF DESIGN

PROJECT ID: HWMM008
CONTRACT PIN: 8502013HW0020C

BID SCHEDULE FORM

COL. 1 SEQ. NO	COL. 2 ITEM NUMBER and DESCRIPTION	COL. 3 ENGINEER'S ESTIMATE OF QUANTITIY	COL. 4 UNIT	COL. 5 UNIT PRICE (IN FIGURES) DOLLARS	CTS	COL. 6 EXTENDED AMOUNT (IN FIGURES) DOLLARS	CTS
186	T-20220 c) FURNISH 1-1/4" ANCHOR BOLT ASSEMBLIES FOR M-2 (EACH) (4 REQUIRED PER POST)	44.00	EACH	50	00	2,200	00
187	T-20640 FURNISH ALUMINUM TRAFFIC SIGNAL POST TYPE "S-14"	1.00	EACH	1,100	00	1,100	00
188	T-3.1 INSTALL "ONE-WAY" SIGNAL UNIT ON MAST ARM OR TOP OF TRAFFIC POST	23.00	EACH	220	00	5,060	00
189	T-3.18 REMOVE SIGNAL HEAD FROM ANY TYPE POST	15.00	EACH	220	00	3,300	00
190	T-3.2 INSTALL "ONE-WAY" SIGNAL UNIT ON THE SHAFT OF ANY POST	4.00	EACH	330	00	1,320	00
191	T-3.21 REMOVE PEDESTRIAN SIGNAL OR SIGN UNIT OR OTHER ILLUMINATED SIGNS FROM ANY POST	30.00	EACH	220	00	6,600	00

NEW YORK CITY DEPARTMENT OF DESIGN AND CONSTRUCTION
DIVISION OF INFRASTRUCTURE - BUREAU OF DESIGN

PROJECT ID: HWMM008
CONTRACT PIN: 8502013HW0020C

BID SCHEDULE FORM

COL. 1 SEQ. NO.	COL. 2 ITEM NUMBER and DESCRIPTION	COL. 3 ENGINEER'S ESTIMATE OF QUANTITY	COL. 4 UNIT	COL. 5 UNIT PRICE (IN FIGURES) DOLLARS	CTS	COL. 6 EXTENDED AMOUNT (IN FIGURES) DOLLARS	CTS
192	**T-3.26** REMOVE STREET LIGHT LUMINAIRE AND PHOTO ELECTRIC CONTROL FROM STREET LIGHT ARM	2.00	EACH	110	00	220	00
193	**T-3.27** INSTALL STREET LIGHT LUMINAIRE AND PHOTO ELECTRIC CONTROL ON STREET LIGHT MAST	2.00	EACH	130	00	260	00
194	**T-3.6** INSTALL PEDESTRIAN SIGNAL ON ANY TYPE POST	34.00	EACH	300	00	10,200	00
195	**T-30013L** FURNISH ADJST 3 SCTN 1-WAY TRAFFIC SIGNAL, 8" - W/LED LENS	27.00	EACH	450	00	12,150	00
196	**T-31150** FURNISH "1SA" ALUMINUM DIE CASTINGS AND ASSEMBLY FOR POST SIGNAL MOUNTING	1.00	EACH	100	00	100	00
197	**T-31200** e) "VB" ASSEMBLY *ASSEMBLY IS EQUAL TO ONE PAIR	4.00	EACH	100	00	400	00

NEW YORK CITY DEPARTMENT OF DESIGN AND CONSTRUCTION
DIVISION OF INFRASTRUCTURE - BUREAU OF DESIGN

PROJECT ID: HWMM008
CONTRACT PIN: 8502013HW0020C

BID SCHEDULE FORM

COL. 1 SEQ. NO	COL. 2 ITEM NUMBER and DESCRIPTION	COL. 3 ENGINEER'S ESTIMATE OF QUANTITY	COL. 4 UNIT	COL. 5 UNIT PRICE (IN FIGURES) DOLLARS	CTS	COL. 6 EXTENDED AMOUNT (IN FIGURES) DOLLARS	CTS
198	**T-31205** FURNISH MAST ARM SIGNAL MOUNTING ASSEMBLY - a) "1MS"	3.00	EACH	35	00	105	00
199	**T-31210** h) "HUB" ASSEMBLY *ASSEMBLY IS EQUAL TO ONE PAIR	22.00	EACH	36	00	792	00
200	**T-31215** b) "2MS"	5.00	EACH	250	00	1,250	00
201	**T-31225** c) "3MS"	3.00	EACH	270	00	810	00
202	**T-31340** f) "VB-P" ASSEMBLY *ASSEMBLY IS EQUAL TO ONE PAIR	4.00	EACH	100	00	400	00
203	**T-31351** g) "VB-2P" ASSEMBLY *ASSEMBLY IS EQUAL TO ONE PAIR	16.00	EACH	250	00	4,000	00

NEW YORK CITY DEPARTMENT OF DESIGN AND CONSTRUCTION
DIVISION OF INFRASTRUCTURE - BUREAU OF DESIGN

PROJECT ID: HWMM008
CONTRACT PIN: 8502013HW0020C

BID SCHEDULE FORM

COL 1 SEQ. NO	COL 2 ITEM NUMBER and DESCRIPTION	COL 3 ENGINEER'S ESTIMATE OF QUANTITY	COL 4 UNIT	COL 5 UNIT PRICE (IN FIGURES) DOLLARS	COL 5 CTS	COL 6 EXTENDED AMOUNT (IN FIGURES) DOLLARS	COL 6 CTS
204	**T-33000L** FURNISH POLYCARBONATE INCANDESCENT PED SIGNAL W/LED LENS	3.00	EACH	350	00	1,050	00
205	**T-33001-L** FURNISH POLYCARBONATE PEDESTRIAN SIGNAL (16 X 16) W/LED COUNT LENS (SPECIFICATION A-L)	31.00	EACH	450	00	13,950	00
206	**T-4.22** INSTALL ANY TYPE OF ADVANCED SOLID STATE TRAFFIC SIGNAL CONTROLLER AND CABINET ON METAL POLE	3.00	EACH	1,500	00	4,500	00
207	**T-4.8** REMOVE ONE CONTROL BOX AND CONTROLLER FROM ANY POST OR SUPPORT	3.00	EACH	900	00	2,700	00
208	**T-5.1** FURNISH AND INSTALL 2" RIGID UNDERGROUND CONDUIT IN UNPAVED ROADWAY	62.00	L.F.	50	00	3,100	00
209	**T-5.2** FURNISH AND INSTALL 2" RIGID UNDERGROUND CONDUIT IN PAVED ROADWAY	1,113.00	L.F.	175	00	194,775	00

NEW YORK CITY DEPARTMENT OF DESIGN AND CONSTRUCTION
DIVISION OF INFRASTRUCTURE - BUREAU OF DESIGN

PROJECT ID: HWMM008
CONTRACT PIN: 8502013HW0020C

BID SCHEDULE FORM

COL. 1 SEQ. NO.	COL. 2 ITEM NUMBER and DESCRIPTION	COL. 3 ENGINEER'S ESTIMATE OF QUANTITY	COL. 4 UNIT	COL. 5 UNIT PRICE (IN FIGURES) DOLLARS	CTS	COL. 6 EXTENDED AMOUNT (IN FIGURES) DOLLARS	CTS
210	**T-5.3** FURNISH AND INSTALL 2" RIGID UNDERGROUND CONDUIT IN PAVED SIDEWALK	50.00	L.F.	50	00	2,500	00
211	**T-5.32** RESTORING PERMANENT ROADWAY (INCLUDING SAWCUT)	900.00	L.F.	2	00	1,800	00
212	**T-5.34** RESTORING PERMANENT SIDEWALK	50.00	S.F.	3	00	150	00
213	**T-5.7** FURNISH AND INSTALL ADDITIONAL 2" RIGID UNDERGROUND CONDUIT	50.00	L.F.	100	00	5,000	00
214	**T-6.1** INSTALL CABLE (INCLUDES OVERHEAD)	1,000.00	L.F.	6	00	6,000	00
215	**T-6.10** REMOVE CABLE (INCLUDES OVERHEAD)	2,700.00	L.F.	5	00	13,500	00

NEW YORK CITY DEPARTMENT OF DESIGN AND CONSTRUCTION
DIVISION OF INFRASTRUCTURE - BUREAU OF DESIGN

PROJECT ID: HWMM008
CONTRACT PIN: 8502013HW0020C

BID SCHEDULE FORM

COL. 1 SEQ. NO	COL. 2 ITEM NUMBER and DESCRIPTION	COL. 3 ENGINEER'S ESTIMATE OF QUANTITY	COL. 4 UNIT	COL. 5 UNIT PRICE (IN FIGURES) DOLLARS	CTS	COL. 6 EXTENDED AMOUNT (IN FIGURES) DOLLARS	CTS
216	**T-6.2** INSTALL MULTIPLE CABLE (INCLUDES OVERHEAD)	2,700.00	L.F.	6	00	16,200	00
217	**T-60000B** FURNISH 2 c # 10B (SEE SPEC) (BREAKDOWN = 2#10 WITH 3RD WIRE FOR GROUNDING).	3,000.00	L.F.	4	00	12,000	00
218	**T-60040** c) 7 CONDUCTOR, 14 A.W.G.	1,000.00	L.F.	4	00	4,000	00
219	**T-60190** e) 13 CONDUCTOR, 14 A.W.G.	3,500.00	L.F.	4	00	14,000	00
220	**T-7.53** REMOVE (2418) HAND BOX OR PULL BOX IN PAVED SIDEWALK	1.00	EACH	500	00	500	00
221	**T-8.10** RELOCATE CONCRETE PYLON WITH POST	8.00	EACH	1,200	00	9,600	00

NEW YORK CITY DEPARTMENT OF DESIGN AND CONSTRUCTION
DIVISION OF INFRASTRUCTURE - BUREAU OF DESIGN

PROJECT ID: HWMM008
CONTRACT PIN: 8502013HW0020C

BID SCHEDULE FORM

COL. 1 SEQ. NO	COL. 2 ITEM NUMBER AND DESCRIPTION	COL. 3 ENGINEER'S ESTIMATE OF QUANTITIY	COL. 4 UNIT	COL. 5 UNIT PRICE (IN FIGURES) DOLLARS	CTS	COL. 6 EXTENDED AMOUNT (IN FIGURES) DOLLARS	CTS
222	**T-8.8** INSTALL CONCRETE PYLON	8.00	EACH	1,000	00	8,000	00
223	**T-8.9** REMOVE CONCRETE PYLON	8.00	EACH	500	00	4,000	00
224	**T-81000** FURNISH CONCRETE PYLON	8.00	EACH	700	00	5,600	00
225	**UTL-6.01.8** GAS SERVICES CROSSING TRENCHES AND/OR EXCAVATIONS (S6.01) **Unit price bid shall not be less than: $ 465.00**	20.00	EACH	465	00	9,300	00
226	**UTL-6.01.9** GAS MAIN CROSSING WATER MAIN UP TO 20" IN DIAMETER (S6.01) **Unit price bid shall not be less than: $ 485.00**	23.00	EACH	1,000	00	23,000	00
227	**UTL-6.03** REMOVAL OF ABANDONED GAS FACILITIES. ALL SIZES. (S6.03) **Unit price bid shall not be less than: $ 15.00**	800.00	L.F.	15	00	12,000	00

NEW YORK CITY DEPARTMENT OF DESIGN AND CONSTRUCTION
DIVISION OF INFRASTRUCTURE - BUREAU OF DESIGN

PROJECT ID: HWMM008
CONTRACT PIN: 8502013HW0020C

BID SCHEDULE FORM

COL. 1 SEQ. NO	COL. 2 ITEM NUMBER and DESCRIPTION	COL. 3 ENGINEER'S ESTIMATE OF QUANTITIY	COL. 4 UNIT	COL. 5 UNIT PRICE (IN FIGURES) DOLLARS	CTS	COL. 6 EXTENDED AMOUNT (IN FIGURES) DOLLARS	CTS
228	**UTL-6.04** ADJUST HARDWARE TO GRADE USING SPACER RINGS/ADAPTORS. (STREET REPAVING.) (S6.04) **Unit price bid shall not be less than: $ 35.00**	70.00	EACH	35	00	2,450	00
229	**UTL-6.05** ADJUST HARDWARE TO GRADE BY RESETTING. (ROAD RECONSTRUCTION.) (S6.05) **Unit price bid shall not be less than: $ 65.00**	50.00	EACH	65	00	3,250	00
230	**UTL-6.06** SPECIAL CARE EXCAVATION AND BACKFILLING (S6.06) **Unit price bid shall not be less than: $ 180.00**	800.00	C.Y.	250	00	200,000	00
231	**UTL-6.07** TEST PITS FOR GAS FACILITIES (S6.07) **Unit price bid shall not be less than: $ 100.00**	300.00	C.Y.	200	00	60,000	00
232	**UTL-GCS-2WS** GAS INTERFERENCES AND ACCOMMODATIONS PRICE BID SHALL BE FOR THE FIXED SUM OF $ 60,000.00	1.00	F.S.	60,000	00	60,000	00

NEW YORK CITY DEPARTMENT OF DESIGN AND CONSTRUCTION
DIVISION OF INFRASTRUCTURE - BUREAU OF DESIGN

PROJECT ID: HWMM008
CONTRACT PIN: 8502013HW0020C

BID SCHEDULE FORM

COL. 1 SEQ. NO.	COL. 2 ITEM NUMBER and DESCRIPTION	COL. 3 ENGINEER'S ESTIMATE OF QUANTITIY	COL. 4 UNIT	COL. 5 UNIT PRICE (IN FIGURES) DOLLARS	CTS	COL. EXTENDED AMOUNT (IN FIGURES) DOLLARS	CTS

SUB-TOTAL: $ 10,150,191.96

233	6.39 A MOBILIZATION BID PRICE OF MOBILIZATION SHALL NOT EXCEED 4% OF THE ABOVE SUB-TOTAL PRICE.	1.00	L.S.		406,007	68

TOTAL BID PRICE: $ 10,556,199.64

PLEASE BE SURE A LEGIBLE BID IS ENTERED FOR EACH ITEM.
THE BIDDER SHALL INSERT THE TOTAL BID PRICE IN
THE BID FORM ON PAGE C-4 OF THIS BID BOOKLET.

BID SCHEDULE

NOTE: (1) The Agency may reject a bid if it contains unbalanced bid prices. An unbalanced bid is considered to be one containing lump sum or unit items which do not reflect reasonable actual costs plus a reasonable proportionate share of the Bidder's anticipated profit, overhead costs, and other indirect costs, anticipated for the performance of the items in question.

(2) The following bid prices on Unit Price Contracts are to be paid for the actual quantities of the item numbers in the completed work or structure, and they cover the cost of all work, labor, material, tools, plant and appliances of every description necessary to complete the entire work, as specified, and the removal of all debris, temporary work and appliances.

(3) PLEASE BE SURE A LEGIBLE BID IS ENTERED, IN INK, FOR EACH ITEM.
Alterations must be initialed in ink by the bidder.

(4) The Extended Amount entered in Column 6 shall be the product of the Estimated Quantity in Column 3 times the Unit Price Bid in Column 5.

(5) Prospective bidders must examine the Bid Schedule carefully and, before bidding, must advise the Commissioner, in writing, if any pages are missing, and must request that such missing pages be furnished them. The pages of this Bid Schedule are numbered consecutively, as follows:
B - 3 Through B - 44

PLEASE BE SURE A LEGIBLE BID IS ENTERED FOR EACH ITEM.
THE BIDDER SHALL INSERT THE TOTAL BID PRICE IN
THE BID FORM ON PAGE C-4 OF THIS BID BOOKLET.

NEW YORK CITY DEPARTMENT OF DESIGN AND CONSTRUCTION
DIVISION OF INFRASTRUCTURE - BUREAU OF DESIGN

PROJECT ID: HWMM008
CONTRACT PIN: 8502013HW0020C

BID SCHEDULE FORM

COL. 1 SEQ. NO	COL. 2 ITEM NUMBER and DESCRIPTION	COL. 3 ENGINEER'S ESTIMATE OF QUANTITIY	COL. 4 UNIT	COL. 5 UNIT PRICE (IN FIGURES) DOLLARS	CTS	COL. 6 EXTENDED AMOUNT (IN FIGURES) DOLLARS	CTS
001	**4.02 AG** ASPHALTIC CONCRETE WEARING COURSE, 3" THICK	4,789.00	S.Y.				
002	**4.02 CB** ASPHALTIC CONCRETE MIXTURE	1,249.00	TONS				
003	**4.04 H** CONCRETE BASE FOR PAVEMENT, VARIABLE THICKNESS FOR TRENCH RESTORATION, (HIGH-EARLY STRENGTH)	1,091.00	C.Y.				
004	**4.05 AX** HIGH-EARLY STRENGTH REINFORCED CONCRETE PAVEMENT (BUS STOPS)	286.00	C.Y.				
005	**4.06** CONCRETE IN STRUCTURES, CLASS A-40	48.00	C.Y.				
006	**4.07 CB** NEW GRANITE CURB, STRAIGHT	492.00	L.F.				

NEW YORK CITY DEPARTMENT OF DESIGN AND CONSTRUCTION
DIVISION OF INFRASTRUCTURE - BUREAU OF DESIGN

PROJECT ID: HWMM008
CONTRACT PIN: 8502013HW0020C

BID SCHEDULE FORM

COL. 1 SEQ. NO	COL. 2 ITEM NUMBER and DESCRIPTION	COL. 3 ENGINEER'S ESTIMATE OF QUANTITIY	COL. 4 UNIT	COL. 5 UNIT PRICE (IN FIGURES) DOLLARS	CTS	COL. 6 EXTENDED AMOUNT (IN FIGURES) DOLLARS	CTS
007	**4.07 CC** NEW GRANITE CURB, CORNER	182.00	L.F.				
008	**4.08 AA** CONCRETE CURB (18" DEEP)	385.00	L.F.				
009	**4.09 AF** STRAIGHT STEEL FACED CONCRETE CURB (27" DEEP)	2,791.00	L.F.				
010	**4.09 BF** DEPRESSED STEEL FACED CONCRETE CURB (27" DEEP)	66.00	L.F.				
011	**4.09 CF** CORNER STEEL FACED CONCRETE CURB (27" DEEP)	299.00	L.F.				
012	**4.09 SBSAJ** STRAIGHT STEEL FACED CONCRETE CURB FOR SBS STATIONS (30.5" DEEP)	550.00	L.F.				

NEW YORK CITY DEPARTMENT OF DESIGN AND CONSTRUCTION
DIVISION OF INFRASTRUCTURE - BUREAU OF DESIGN

PROJECT ID: HWMM008
CONTRACT PIN: 8502013HW0020C

BID SCHEDULE FORM

COL. 1 SEQ. NO	COL. 2 ITEM NUMBER and DESCRIPTION	COL. 3 ENGINEER'S ESTIMATE OF QUANTITIY	COL. 4 UNIT	COL. 5 UNIT PRICE (IN FIGURES) DOLLARS	CTS	COL. 6 EXTENDED AMOUNT (IN FIGURES) DOLLARS	CTS
013	**4.09 SBSCJ** CORNER STEEL FACED CONCRETE CURB FOR SBS STATIONS (30.5" DEEP)	58.00	L.F.				
014	**4.11 CA** FILL, PLACE MEASUREMENT	385.00	C.Y.				
015	**4.13 AAS** 4" CONCRETE SIDEWALK (UNPIGMENTED)	30,876.00	S.F.				
016	**4.13 BAS** 7" CONCRETE SIDEWALK (UNPIGMENTED)	5,011.00	S.F.				
017	**4.13 DE** EMBEDDED PREFORMED DETECTABLE WARNING UNITS	352.00	S.F.				
018	**4.13 DSBS** EMBEDDED PRECAST CONCRETE DETECTABLE WARNING PAVERS FOR SBS STATIONS	1,395.00	S.F.				

NEW YORK CITY DEPARTMENT OF DESIGN AND CONSTRUCTION
DIVISION OF INFRASTRUCTURE - BUREAU OF DESIGN

PROJECT ID: HWMM008
CONTRACT PIN: 8502013HW0020C

BID SCHEDULE FORM

COL. 1 SEQ. NO	COL. 2 ITEM NUMBER and DESCRIPTION	COL. 3 ENGINEER'S ESTIMATE OF QUANTITIY	COL. 4 UNIT	COL. 5 UNIT PRICE (IN FIGURES) DOLLARS	CTS	COL. 6 EXTENDED AMOUNT (IN FIGURES) DOLLARS	CTS
019	**4.14** STEEL REINFORCEMENT BARS	1,320.00	LBS.				
020	**4.15 SS** STRUCTURAL SOIL FOUNDATION MATERIAL	247.00	C.Y.				
021	**4.16 AA** TREES REMOVED (4" TO UNDER 12" CALIPER)	3.00	EACH				
022	**4.16 BA405** TREES PLANTED, 2-1/2" TO 3" CALIPER, ALL TYPES, IN 4' X 5' TREE PITS	2.00	EACH				
023	**4.16 BA510** TREES PLANTED, 2-1/2" TO 3" CALIPER, ALL TYPES, IN 5' X 10' TREE PITS	5.00	EACH				
024	**4.16 BA515** TREES PLANTED, 2-1/2" TO 3" CALIPER, ALL TYPES, IN 5' X 15' TREE PITS	8.00	EACH				

NEW YORK CITY DEPARTMENT OF DESIGN AND CONSTRUCTION
DIVISION OF INFRASTRUCTURE - BUREAU OF DESIGN

PROJECT ID: HWMM008
CONTRACT PIN: 8502013HW0020C

BID SCHEDULE FORM

COL. 1 SEQ. NO	COL. 2 ITEM NUMBER and DESCRIPTION	COL. 3 ENGINEER'S ESTIMATE OF QUANTITIY	COL. 4 UNIT	COL. 5 UNIT PRICE (IN FIGURES) DOLLARS	CTS	COL. 6 EXTENDED AMOUNT (IN FIGURES) DOLLARS	CTS
025	**4.16 BA520** TREES PLANTED, 2-1/2" TO 3" CALIPER, ALL TYPES, IN 5' X 20' TREE PITS	1.00	EACH				
026	**4.16 BA525** TREES PLANTED, 2-1/2" TO 3" CALIPER, ALL TYPES, IN 5' X 25' TREE PITS	1.00	EACH				
027	**4.17 AC** SHRUBS PLANTED, 18" TO 24" HIGH, ALL TYPES	304.00	EACH				
028	**4.17 FB** FLOWERING BULB, PLANTED, ALL TYPES	2,759.00	EACH				
029	**4.17 IG** SHRUBS PLANTED, 2-1/2 TO 3 FEET HIGH, ILEX GLABRA	37.00	EACH				
030	**4.17 OG3G** ORNAMENTAL GRASS PLANTED, 3 GALLON	301.00	EACH				

NEW YORK CITY DEPARTMENT OF DESIGN AND CONSTRUCTION
DIVISION OF INFRASTRUCTURE - BUREAU OF DESIGN

PROJECT ID: HWMM008
CONTRACT PIN: 8502013HW0020C

BID SCHEDULE FORM

COL. 1 SEQ. NO	COL. 2 ITEM NUMBER and DESCRIPTION	COL. 3 ENGINEER'S ESTIMATE OF QUANTITIY	COL. 4 UNIT	COL. 5 UNIT PRICE (IN FIGURES) DOLLARS	CTS	COL. 6 EXTENDED AMOUNT (IN FIGURES) DOLLARS	CTS
031	**4.17 PG1G** PERENNIALS OR GROUNDCOVERS, PLANTED, 1 GALLON, ALL TYPES	204.00	EACH				
032	**4.17 RAGL** SHRUBS PLANTED, RHUS AROMATICA "GLO-LOW"	33.00	EACH				
033	**4.18 A** MAINTENANCE TREE PRUNING (UNDER 12" CAL.)	26.00	EACH				
034	**4.18 RP** ROOT PRUNING	3.00	EACH				
035	**4.21** TREE CONSULTANT	154.00	P/HR				
036	**51.23RF** REPLACEMENT OF EXISTING MANHOLE FRAME AND COVER	4.00	EACH				

NEW YORK CITY DEPARTMENT OF DESIGN AND CONSTRUCTION
DIVISION OF INFRASTRUCTURE - BUREAU OF DESIGN

PROJECT ID: HWMM008
CONTRACT PIN: 8502013HW0020C

BID SCHEDULE FORM

COL. 1 SEQ. NO	COL. 2 ITEM NUMBER and DESCRIPTION	COL. 3 ENGINEER'S ESTIMATE OF QUANTITIY	COL. 4 UNIT	COL. 5 UNIT PRICE (IN FIGURES) DOLLARS	CTS	COL. 6 EXTENDED AMOUNT (IN FIGURES) DOLLARS	CTS
037	**51.41S001** STANDARD CATCH BASIN, TYPE 1	7.00	EACH				
038	**51.41S002** STANDARD CATCH BASIN, TYPE 2	2.00	EACH				
039	**51.42S1SO** INCREMENTAL COST OF STANDARD CATCH BASIN TYPE 3 WITH CURB PIECE IN LIEU OF STANDARD CATCH BASIN TYPE 1	1.00	EACH				
040	**52.11D12** 12" DUCTILE IRON PIPE BASIN CONNECTION	426.00	L.F.				
041	**55.11AB** ABANDONING BASINS AND INLETS	5.00	EACH				
042	**6.02 AAN** UNCLASSIFIED EXCAVATION	3,370.00	C.Y.				

NEW YORK CITY DEPARTMENT OF DESIGN AND CONSTRUCTION
DIVISION OF INFRASTRUCTURE - BUREAU OF DESIGN

PROJECT ID: HWMM008
CONTRACT PIN: 8502013HW0020C

BID SCHEDULE FORM

COL. 1 SEQ. NO	COL. 2 ITEM NUMBER and DESCRIPTION	COL. 3 ENGINEER'S ESTIMATE OF QUANTITIY	COL. 4 UNIT	COL. 5 UNIT PRICE (IN FIGURES) DOLLARS	CTS	COL. 6 EXTENDED AMOUNT (IN FIGURES) DOLLARS	CTS
049	**6.23 BA** FURNISH AND INSTALL FIRE ALARM POST AND SUBBASE IN ACCORDANCE WITH F.D. STD. DWG. #141	2.00	EACH				
050	**6.23 BD** FURNISH AND INSTALL 4-PAIR FIRE ALARM CABLE	250.00	L.F.				
051	**6.23 BFC** FURNISH AND INSTALL FIRE DEPARTMENT 12 WIRE TERMINAL BOX AND TERMINATE FIRE ALARM CABLES	2.00	EACH				
052	**6.23 BGSE** FURNISH AND INSTALL 4" P.V.C. CONDUIT, SCHEDULE 40, U.L. 651 (WITH PAVEMENT EXCAVATION)	60.00	L.F.				
053	**6.23 BHE** FURNISH AND INSTALL 4" 90-DEGREE P.V.C. WIDE BEND, SCHEDULE 40, U.L. 651 (WITH PAVEMENT EXCAVATION) IN ACCORDANCE WITH F.D. STD. DWG. #141 OR #145AA	2.00	EACH				
054	**6.23 BP** FURNISH AND INSTALL FIRE ALARM PEDESTAL BUMPERS (2 REQUIRED PER SET) IN ACCORDANCE WITH F.D. STD. DWG. #168	2.00	SETS				

NEW YORK CITY DEPARTMENT OF DESIGN AND CONSTRUCTION
DIVISION OF INFRASTRUCTURE - BUREAU OF DESIGN

PROJECT ID: HWMM008
CONTRACT PIN: 8502013HW0020C

BID SCHEDULE FORM

COL. 1 SEQ. NO	COL. 2 ITEM NUMBER and DESCRIPTION	COL. 3 ENGINEER'S ESTIMATE OF QUANTITIY	COL. 4 UNIT	COL. 5 UNIT PRICE (IN FIGURES) DOLLARS	CTS	COL. 6 EXTENDED AMOUNT (IN FIGURES) DOLLARS	CTS
043	**6.02 PA** PNEUMATIC EXCAVATION AROUND TREES	205.00	C.Y.				
044	**6.02 XHEC** INCREMENTAL COST FOR MODIFYING WORK METHODS NEAR (WITHIN 3 FEET OF) TRANSIT FACILITIES AND BUILDING VAULTS	48.00	C.Y.				
045	**6.02 XSCW** INCREMENTAL COST FOR USING SPECIAL CARE WORK METHODS NEAR (FROM 3 FEET TO 50 FEET) TRANSIT FACILITIES	83.00	C.Y.				
046	**6.06 AC** GRANITE BLOCK SIDEWALK (SAND AND GROUTED JOINTS)(FURNISH BLOCK)	215.00	S.Y.				
047	**6.11 CA** MANHOLES, MODIFIED (GRADE CHANGE)	2.00	EACH				
048	**6.23 AB** REMOVE EXISTING FIRE ALARM POST	2.00	EACH				

NEW YORK CITY DEPARTMENT OF DESIGN AND CONSTRUCTION
DIVISION OF INFRASTRUCTURE - BUREAU OF DESIGN

PROJECT ID: HWMM008
CONTRACT PIN: 8502013HW0020C

BID SCHEDULE FORM

COL. 1 SEQ. NO	COL. 2 ITEM NUMBER and DESCRIPTION	COL. 3 ENGINEER'S ESTIMATE OF QUANTITIY	COL. 4 UNIT	COL. 5 UNIT PRICE (IN FIGURES) DOLLARS	CTS	COL. 6 EXTENDED AMOUNT (IN FIGURES) DOLLARS	CTS
055	**6.25 RS** TEMPORARY SIGNS	233.00	S.F.				
056	**6.26** TIMBER CURB	10,697.00	L.F.				
057	**6.27 DBI** DEMOLITION, REMOVAL AND DISPOSAL OF BICYCLE RACK	11.00	EACH				
058	**6.36 DR** STRUCTURAL REPAIR AND ADJUSTMENT OF UTILITY STRUCTURES	3.00	C.Y.				
059	**6.40 C** ENGINEER'S FIELD OFFICE (TYPE C)	18.00	MONTH				
060	**6.43** PHOTOGRAPHS	792.00	SETS				

NEW YORK CITY DEPARTMENT OF DESIGN AND CONSTRUCTION
DIVISION OF INFRASTRUCTURE - BUREAU OF DESIGN

PROJECT ID: HWMM008
CONTRACT PIN: 8502013HW0020C

BID SCHEDULE FORM

COL. 1 SEQ. NO	COL. 2 ITEM NUMBER and DESCRIPTION	COL. 3 ENGINEER'S ESTIMATE OF QUANTITIY	COL. 4 UNIT	COL. 5 UNIT PRICE (IN FIGURES) DOLLARS	CTS	COL. 6 EXTENDED AMOUNT (IN FIGURES) DOLLARS	CTS
061	6.44 THERMOPLASTIC REFLECTORIZED PAVEMENT MARKINGS (4" WIDE)	41,082.00	L.F.				
062	6.49 TEMPORARY PAVEMENT MARKINGS (4" WIDE)	2,200.00	L.F.				
063	6.50 CLEANING OF DRAINAGE STRUCTURES	14.00	EACH				
064	6.52 FED UNIFORMED FLAGPERSON PRICE BID SHALL BE FOR THE FIXED SUM OF $ 157,890.00	1.00	F.S.	157,890	00	157,890	00
065	6.53 REMOVE EXISTING LANE MARKINGS (4" WIDE)	12,358.00	L.F.				

NEW YORK CITY DEPARTMENT OF DESIGN AND CONSTRUCTION
DIVISION OF INFRASTRUCTURE - BUREAU OF DESIGN

PROJECT ID: HWMM008
CONTRACT PIN: 8502013HW0020C

BID SCHEDULE FORM

COL. 1 SEQ. NO	COL. 2 ITEM NUMBER and DESCRIPTION	COL. 3 ENGINEER'S ESTIMATE OF QUANTITIY	COL. 4 UNIT	COL. 5 UNIT PRICE (IN FIGURES) DOLLARS	CTS	COL. 6 EXTENDED AMOUNT (IN FIGURES) DOLLARS	CTS
066	6.55 SAWCUTTING EXISTING PAVEMENT	5,084.00	L.F.				
067	6.67 SUBBASE COURSE, SELECT GRANULAR MATERIAL	21.00	C.Y.				
068	6.68 PLASTIC FILTER FABRIC	124.00	S.Y.				
069	6.75 GRINDING EXISTING ASPHALTIC CONCRETE WEARING COURSE	49.00	C.Y.				
070	6.77 R METAL TRASH RECEPTACLE	11.00	EACH				
071	6.82 A REMOVING EXISTING TRAFFIC AND STREET NAME SIGNS	369.00	S.F.				

NEW YORK CITY DEPARTMENT OF DESIGN AND CONSTRUCTION
DIVISION OF INFRASTRUCTURE - BUREAU OF DESIGN

PROJECT ID: HWMM008
CONTRACT PIN: 8502013HW0020C

BID SCHEDULE FORM

COL. 1 SEQ. NO	COL. 2 ITEM NUMBER and DESCRIPTION	COL. 3 ENGINEER'S ESTIMATE OF QUANTITIY	COL. 4 UNIT	COL. 5 UNIT PRICE (IN FIGURES) DOLLARS	CTS	COL. 6 EXTENDED AMOUNT (IN FIGURES) DOLLARS	CTS
072	**6.82 B** REMOVING EXISTING TRAFFIC AND STREET NAME SIGN POSTS	396.00	L.F.				
073	**6.83 AA** FURNISHING NEW NON-REFLECTORIZED TRAFFIC SIGNS	132.00	S.F.				
074	**6.83 AB** FURNISHING NEW TRAFFIC SIGN POSTS	396.00	L.F.				
075	**6.83 AR** FURNISHING NEW REFLECTORIZED TRAFFIC SIGNS	163.00	S.F.				
076	**6.83 BA** INSTALLING TRAFFIC SIGNS	295.00	S.F.				
077	**6.83 BB** INSTALLING TRAFFIC SIGN POSTS	396.00	L.F.				

NEW YORK CITY DEPARTMENT OF DESIGN AND CONSTRUCTION
DIVISION OF INFRASTRUCTURE - BUREAU OF DESIGN

PROJECT ID: HWMM008
CONTRACT PIN: 8502013HW0020C

BID SCHEDULE FORM

COL. 1 SEQ. NO	COL. 2 ITEM NUMBER and DESCRIPTION	COL. 3 ENGINEER'S ESTIMATE OF QUANTITTY	COL. 4 UNIT	COL. 5 UNIT PRICE (IN FIGURES) DOLLARS	CTS	COL. 6 EXTENDED AMOUNT (IN FIGURES) DOLLARS	CTS
078	6.84 B LOLLIPOP TYPE BUS STOP SIGNS PRICE BID SHALL BE FOR THE FIXED SUM OF $ 8,000.00	1.00	F.S.	8,000	00	8,000	00
079	6.85 A TRAFFIC ENFORCEMENT AGENTS PRICE BID SHALL BE FOR THE FIXED SUM OF $ 1,949,882.06	1.00	F.S.	1,949,882	06	1,949,882	06
080	6.86 AA FURNISHING NEW STREET NAME SIGNS	75.00	S.F.				
081	6.86 BA INSTALLING STREET NAME SIGNS	75.00	S.F.				
082	6.87 PLASTIC BARRELS	5,317.00	EACH				

NEW YORK CITY DEPARTMENT OF DESIGN AND CONSTRUCTION
DIVISION OF INFRASTRUCTURE - BUREAU OF DESIGN

PROJECT ID: HWMM008
CONTRACT PIN: 8502013HW0020C

BID SCHEDULE FORM

COL. 1 SEQ. NO	COL. 2 ITEM NUMBER and DESCRIPTION	COL. 3 ENGINEER'S ESTIMATE OF QUANTITIY	COL. 4 UNIT	COL. 5 UNIT PRICE (IN FIGURES) DOLLARS	CTS	COL. 6 EXTENDED AMOUNT (IN FIGURES) DOLLARS	CTS
083	6.91 REFLECTIVE CRACKING MEMBRANE (18" WIDE)	5,084.00	L.F.				
084	6.94 TFD THRU-FLOW TRENCH DRAIN	104.00	L.F.				
085	6.99 AUDIO AND VIDEO DOCUMENTATION SURVEY	1.00	L.S.				
086	60.11R606 FURNISHING AND DELIVERING 6-INCH DUCTILE IRON RESTRAINED JOINT PIPE (CLASS 56)	385.00	L.F.				
087	60.11R612 FURNISHING AND DELIVERING 12-INCH DUCTILE IRON RESTRAINED JOINT PIPE (CLASS 56)	5,280.00	L.F.				
088	60.12D06 LAYING 6-INCH DUCTILE IRON PIPE AND FITTINGS	435.00	L.F.				

BID SCHEDULE FORM

COL. 1 SEQ. NO	COL. 2 ITEM NUMBER and DESCRIPTION	COL. 3 ENGINEER'S ESTIMATE OF QUANTITIY	COL. 4 UNIT	COL. 5 UNIT PRICE (IN FIGURES) DOLLARS	CTS	COL. 6 EXTENDED AMOUNT (IN FIGURES) DOLLARS	CTS
089	60.12D12 LAYING 12-INCH DUCTILE IRON PIPE AND FITTINGS	5,379.00	L.F.				
090	60.13M0A24 FURNISHING AND DELIVERING DUCTILE IRON MECHANICAL JOINT 24 -INCH DIAMETER AND SMALLER FITTINGS, INCLUDING WEDGE TYPE RETAINER GLANDS	4.00	TONS				
091	61.11DMM06 FURNISHING AND DELIVERING 6-INCH MECHANICAL JOINT DUCTILE IRON GATE VALVE COMPLETE WITH WEDGE TYPE RETAINER GLANDS	18.00	EACH				
092	61.11DMM12 FURNISHING AND DELIVERING 12-INCH MECHANICAL JOINT DUCTILE IRON GATE VALVE COMPLETE WITH WEDGE TYPE RETAINER GLANDS	32.00	EACH				
093	61.11TWC03 FURNISHING AND DELIVERING 3-INCH WET CONNECTION TAPPING VALVE COMPLETE WITH WEDGE TYPE RETAINER GLANDS	40.00	EACH				

NEW YORK CITY DEPARTMENT OF DESIGN AND CONSTRUCTION
DIVISION OF INFRASTRUCTURE - BUREAU OF DESIGN

PROJECT ID: HWMM008
CONTRACT PIN: 8502013HW0020C

BID SCHEDULE FORM

COL. 1 SEQ. NO	COL. 2 ITEM NUMBER and DESCRIPTION	COL. 3 ENGINEER'S ESTIMATE OF QUANTITIY	COL. 4 UNIT	COL. 5 UNIT PRICE (IN FIGURES) DOLLARS . CTS	COL. 6 EXTENDED AMOUNT (IN FIGURES) DOLLARS . CTS
094	**61.11TWC12** FURNISHING AND DELIVERING 12-INCH WET CONNECTION TAPPING VALVE COMPLETE WITH WEDGE TYPE RETAINER GLANDS	12.00	EACH		
095	**61.12DMM06** SETTING 6-INCH MECHANICAL JOINT DUCTILE IRON GATE VALVE COMPLETE WITH WEDGE TYPE RETAINER GLANDS	18.00	EACH		
096	**61.12DMM12** SETTING 12-INCH MECHANICAL JOINT DUCTILE IRON GATE VALVE COMPLETE WITH WEDGE TYPE RETAINER GLANDS	32.00	EACH		
097	**61.12TWC03** SETTING 3-INCH WET CONNECTION TAPPING VALVE COMPLETE WITH WEDGE TYPE RETAINER GLANDS	40.00	EACH		
098	**61.12TWC12** SETTING 12-INCH WET CONNECTION TAPPING VALVE COMPLETE WITH WEDGE TYPE RETAINER GLANDS	12.00	EACH		
099	**62.11SD** FURNISHING AND DELIVERING HYDRANTS	13.00	EACH		

NEW YORK CITY DEPARTMENT OF DESIGN AND CONSTRUCTION
DIVISION OF INFRASTRUCTURE - BUREAU OF DESIGN

PROJECT ID: HWMM008
CONTRACT PIN: 8502013HW0020C

BID SCHEDULE FORM

COL. 1 SEQ. NO	COL. 2 ITEM NUMBER and DESCRIPTION	COL. 3 ENGINEER'S ESTIMATE OF QUANTITIY	COL. 4 UNIT	COL. 5 UNIT PRICE (IN FIGURES) DOLLARS	CTS	COL. 6 EXTENDED AMOUNT (IN FIGURES) DOLLARS	CTS
100	62.11SS FURNISHING AND DELIVERING HYDRANTS - SMITH TYPE (S-2-LP)	5.00	EACH				
101	62.12SG SETTING HYDRANTS COMPLETE WITH WEDGE TYPE RETAINER GLANDS	18.00	EACH				
102	62.13RH REMOVING HYDRANTS	19.00	EACH				
103	62.14FD FURNISHING, DELIVERING AND INSTALLING HYDRANT FENDERS WITH DECORATIVE CAPS (BLACK)	10.00	EACH				
104	62.14FS FURNISHING, DELIVERING AND INSTALLING HYDRANT FENDERS	26.00	EACH				
105	63.11VC FURNISHING AND DELIVERING VARIOUS CASTINGS	5.00	TONS				

NEW YORK CITY DEPARTMENT OF DESIGN AND CONSTRUCTION
DIVISION OF INFRASTRUCTURE - BUREAU OF DESIGN

PROJECT ID: HWMM008
CONTRACT PIN: 8502013HW0020C

BID SCHEDULE FORM

COL. 1 SEQ. NO	COL. 2 ITEM NUMBER and DESCRIPTION	COL. 3 ENGINEER'S ESTIMATE OF QUANTITIY	COL. 4 UNIT	COL. 5 UNIT PRICE (IN FIGURES) DOLLARS	CTS	COL. 6 EXTENDED AMOUNT (IN FIGURES) DOLLARS	CTS
106	**64.12COEG** CUTTING AND OFFSETTING HOUSE SERVICE WATER CONNECTIONS (EQUAL TO OR GREATER THAN 3-INCH DIAMETER)	699.00	L.F.				
107	**64.12ESEG** EXTENDING HOUSE SERVICE WATER CONNECTIONS (EQUAL TO OR GREATER THAN 3-INCH DIAMETER)	605.00	L.F.				
108	**64.13WC12** FURNISHING, DELIVERING AND INSTALLING WET CONNECTION SLEEVE ON 12-INCH WATER MAIN PIPE WITH VARIOUS OUTLETS	16.00	EACH				
109	**65.11BR** FURNISHING, DELIVERING AND INSTALLING BANDS, RODS, WASHERS, ETC., COMPLETE, FOR RESTRAINING JOINTS	1,100.00	LBS.				
110	**65.21PS** FURNISHING AND PLACING POLYETHYLENE SLEEVE **Unit price bid shall not be less than: $ 0.50**	5,280.00	L.F.				
111	**65.31FF** FURNISHING, DELIVERING AND PLACING FILTER FABRIC **Unit price bid shall not be less than: $ 0.10**	45,100.00	S.F.				

NEW YORK CITY DEPARTMENT OF DESIGN AND CONSTRUCTION
DIVISION OF INFRASTRUCTURE - BUREAU OF DESIGN

PROJECT ID: HWMM008
CONTRACT PIN: 8502013HW0020C

BID SCHEDULE FORM

COL. 1 SEQ. NO	COL. 2 ITEM NUMBER and DESCRIPTION	COL. 3 ENGINEER'S ESTIMATE OF QUANTITIY	COL. 4 UNIT	COL. 5 UNIT PRICE (IN FIGURES) DOLLARS	CTS	COL. 6 EXTENDED AMOUNT (IN FIGURES) DOLLARS	CTS
112	**65.71SG** FURNISHING, DELIVERING AND PLACING SCREENED GRAVEL OR SCREENED BROKEN STONE BEDDING	363.00	C.Y.				
113	**670.2002** GALVANIZED STEEL CONDUIT, 1"	402.00	L.F.				
114	**7.12 A** PROCTOR ANALYSIS	36.00	EACH				
115	**7.12 B** IN-PLACE SOIL DENSITY TEST	108.00	EACH				
116	**7.13 B** MAINTENANCE OF SITE **Unit price bid shall not be less than: $ 8,600.00**	12.00	MONTH				
117	**7.19** LOAD TRANSFER JOINT	312.00	L.F.				

NEW YORK CITY DEPARTMENT OF DESIGN AND CONSTRUCTION
DIVISION OF INFRASTRUCTURE - BUREAU OF DESIGN

PROJECT ID: HWMM008
CONTRACT PIN: 8502013HW0020C

BID SCHEDULE FORM

COL. 1 SEQ. NO	COL. 2 ITEM NUMBER and DESCRIPTION	COL. 3 ENGINEER'S ESTIMATE OF QUANTITIY	COL. 4 UNIT	COL. 5 UNIT PRICE (IN FIGURES) DOLLARS	CTS	COL. 6 EXTENDED AMOUNT (IN FIGURES) DOLLARS	CTS
118	**7.36** PEDESTRIAN STEEL BARRICADES	8,228.00	L.F.				
119	**7.49 A** STEEL TREE PIT GUARD TYPE A	1,340.00	L.F.				
120	**7.50 CB** CITY BENCH WITH BACK	10.00	EACH				
121	**7.50 TLB** TRANSIT LEANING BAR	7.00	EACH				
122	**7.54 R** REMOVAL OF EXISTING TREE GRATES AND FRAMES	57.00	EACH				
123	**7.54 RS** RESETTING OF EXISTING TREE GRATES AND FRAMES	1.00	EACH				

NEW YORK CITY DEPARTMENT OF DESIGN AND CONSTRUCTION
DIVISION OF INFRASTRUCTURE - BUREAU OF DESIGN

PROJECT ID: HWMM008
CONTRACT PIN: 8502013HW0020C

BID SCHEDULE FORM

COL. 1 SEQ. NO	COL. 2 ITEM NUMBER and DESCRIPTION	COL. 3 ENGINEER'S ESTIMATE OF QUANTITTIY	COL. 4 UNIT	COL. 5 UNIT PRICE (IN FIGURES) DOLLARS	CTS	COL. 6 EXTENDED AMOUNT (IN FIGURES) DOLLARS	CTS
124	**7.88 AA** RODENT INFESTATION SURVEY AND MONITORING **Unit price bid shall not be less than: $ 1,000.00**	1.00	L.S.				
125	**7.88 AB** RODENT BAIT STATIONS **Unit price bid shall not be less than: $ 60.00**	36.00	EACH				
126	**7.88 AC** BAITING OF RODENT BAIT STATIONS **Unit price bid shall not be less than: $ 9.25**	36.00	EACH				
127	**7.88 AD** WATERBUG BAIT APPLICATIONS **Unit price bid shall not be less than: $ 65.00**	53.00	BLOCK				
128	**70.61RE** ROCK EXCAVATION	50.00	C.Y.				
129	**70.71SB** STONE BALLAST **Unit price bid shall not be less than: $ 15.00**	99.00	C.Y.				

NEW YORK CITY DEPARTMENT OF DESIGN AND CONSTRUCTION
DIVISION OF INFRASTRUCTURE - BUREAU OF DESIGN

PROJECT ID: HWMM008
CONTRACT PIN: 8502013HW0020C

BID SCHEDULE FORM

COL. 1 SEQ. NO	COL. 2 ITEM NUMBER and DESCRIPTION	COL. 3 ENGINEER'S ESTIMATE OF QUANTITIY	COL. 4 UNIT	COL. 5 UNIT PRICE (IN FIGURES) DOLLARS . CTS	COL. 6 EXTENDED AMOUNT (IN FIGURES) DOLLARS . CTS
130	**70.81CB** CLEAN BACKFILL **Unit price bid shall not be less than: $ 15.00**	1,430.00	C.Y.		
131	**70.91SW12** FURNISHING AND PLACING SHEETING AND BRACING IN TRENCH FOR WATER MAIN PIPE 12-INCH IN DIAMETER AND LESS	5,500.00	S.F.		
132	**72.11HF** HYDRAULIC FILL FOR ABANDONED SEWERS AND WATER MAINS	77.00	C.Y.		
133	**73.11AB** ADDITIONAL BRICK MASONRY **Unit price bid shall not be less than: $ 62.50**	30.00	C.Y.		
134	**73.21AC** ADDITIONAL CONCRETE **Unit price bid shall not be less than: $ 62.50**	30.00	C.Y.		
135	**73.31AE0** ADDITIONAL EARTH EXCAVATION INCLUDING TEST PITS (ALL DEPTHS) **Unit price bid shall not be less than: $ 20.00**	627.00	C.Y.		

NEW YORK CITY DEPARTMENT OF DESIGN AND CONSTRUCTION
DIVISION OF INFRASTRUCTURE - BUREAU OF DESIGN

PROJECT ID: HWMM008
CONTRACT PIN: 8502013HW0020C

BID SCHEDULE FORM

COL. 1 SEQ. NO	COL. 2 ITEM NUMBER and DESCRIPTION	COL. 3 ENGINEER'S ESTIMATE OF QUANTITIY	COL. 4 UNIT	COL. 5 UNIT PRICE (IN FIGURES) DOLLARS	CTS	COL. 6 EXTENDED AMOUNT (IN FIGURES) DOLLARS	CTS
136	**73.41AG** ADDITIONAL SELECT GRANULAR BACKFILL **Unit price bid shall not be less than: $ 15.00**	50.00	C.Y.				
137	**73.51AS** ADDITIONAL STEEL REINFORCING BARS **Unit price bid shall not be less than: $ 1.00**	990.00	LBS.				
138	**8.02 A** SPECIAL CARE EXCAVATION AND RESTORATION FOR SIDEWALK WORK	20,213.00	S.F.				
139	**8.02 B** SPECIAL CARE EXCAVATION AND RESTORATION FOR CURB WORK	3,072.00	L.F.				
140	**8.08** VARIABLE MESSAGE BOARD	2.00	EACH				
141	**8.52 FP** STEEL FOUNDATION PLATE	1,304.00	LBS.				

NEW YORK CITY DEPARTMENT OF DESIGN AND CONSTRUCTION
DIVISION OF INFRASTRUCTURE - BUREAU OF DESIGN

PROJECT ID: HWMM008
CONTRACT PIN: 8502013HW0020C

BID SCHEDULE FORM

COL. 1 SEQ. NO	COL. 2 ITEM NUMBER and DESCRIPTION	COL. 3 ENGINEER'S ESTIMATE OF QUANTITIY	COL. 4 UNIT	COL. 5 UNIT PRICE (IN FIGURES) DOLLARS	CTS	COL. 6 EXTENDED AMOUNT (IN FIGURES) DOLLARS	CTS
142	**8.52 PT-B** PAVING TRAY (AREA TOTEM)	4.00	EACH				
143	**8.52 PT-C** PAVING TRAY (NEIGHBOURHOOD TOTEM)	4.00	EACH				
144	**9.04 HW** ALLOWANCE FOR ANTI-FREEZE ADDITIVE IN CONCRETE **PRICE BID SHALL BE FOR THE FIXED SUM OF $ 50,000.00**	1.00	F.S.	50,000	00	50,000	00
145	**9.99** FLASHING ARROW BOARD	3.00	EACH				
146	**HW-914** ALLOWANCE FOR WAYFINDING TOTEMS **PRICE BID SHALL BE FOR THE FIXED SUM OF $ 88,000.00**	1.00	F.S.	88,000	00	88,000	00

NEW YORK CITY DEPARTMENT OF DESIGN AND CONSTRUCTION
DIVISION OF INFRASTRUCTURE - BUREAU OF DESIGN

PROJECT ID: HWMM008
CONTRACT PIN: 8502013HW0020C

BID SCHEDULE FORM

COL. 1	COL. 2	COL. 3	COL. 4	COL. 5		COL. 6	
		ENGINEER'S ESTIMATE		UNIT PRICE (IN FIGURES)		EXTENDED AMOUNT (IN FIGURES)	
SEQ. NO	ITEM NUMBER and DESCRIPTION	OF QUANTITTY	UNIT	DOLLARS	CTS	DOLLARS	CTS
147	**PK-473** DECOMPACT EXISTING TREE	62.00	EACH				
148	**SL-20.02.02** FURNISH AND INSTALL STANDARD TYPE ANCHOR BOLT FOUNDATION, AS PER DRAWING E-3788	25.00	EACH				
149	**SL-20.08.01** REMOVE STANDARD TYPE ANCHOR BOLT CONCRETE FOUNDATION	4.00	EACH				
150	**SL-20.08.02** REMOVE FOUNDATION OTHER THAN STANDARD TYPE.	21.00	EACH				
151	**SL-21.03.02** FURNISH AND INSTALL TYPE 2S, 4S, 6S, 8S OR 12S LAMPPOST WITH TRANSFORMER BASE	2.00	EACH				
152	**SL-21.03.03** FURNISH AND INSTALL TYPE 2T, 6T, 8T OR 12T LAMPPOST WITH TRANSFORMER BASE	2.00	EACH				

NEW YORK CITY DEPARTMENT OF DESIGN AND CONSTRUCTION
DIVISION OF INFRASTRUCTURE - BUREAU OF DESIGN

PROJECT ID: HWMM008
CONTRACT PIN: 8502013HW0020C

BID SCHEDULE FORM

COL. 1 SEQ. NO	COL. 2 ITEM NUMBER and DESCRIPTION	COL. 3 ENGINEER'S ESTIMATE OF QUANTITIY	COL. 4 UNIT	COL. 5 UNIT PRICE (IN FIGURES) DOLLARS	CTS	COL. 6 EXTENDED AMOUNT (IN FIGURES) DOLLARS	CTS
153	**SL-21.04.02** FURNISH AND INSTALL TYPE "BC" LAMPPOST WITH PHOTOELECTRIC CONTROL RECEPTACLE	21.00	EACH				
154	**SL-21.09.05** REMOVE FABRICATED STEEL, ALUMINUM NO. 10, ETC. LAMPPOST, WITH ARM(S), LUMINAIRE(S), ETC., WITH ALL ATTACHMENTS, IF ANY.	4.00	EACH				
155	**SL-21.09.06** REMOVE ORNAMENTAL LAMPPOST (TYPE "BC", "M", "F", "5TH AVENUE", "LYRE" GRAND CENTRAL) ON FOUNDATION, WITH ALL ATTACHMENTS, IF ANY. REMOVE PORTION OF FOUNDATION.	21.00	EACH				
156	**SL-21.09.08** REMOVE ALL STREET LIGHTING EQUIPMENT FROM TYPE "M-2" TRAFFIC POST (ARM(S), PHOTOELECTRIC CONTROLLER, LUMINAIRE (S), SHAFT EXTENSION, WIRING, ETC.)	9.00	EACH				
157	**SL-22.16.05** FURNISH AND INSTALL ROADWAY TYPE LED FIXTURE AS PER SPECIFICATION 466 WITH PEC RECEPTACLE AND PEC	12.00	EACH				

BID SCHEDULE FORM

COL. 1 SEQ. NO	COL. 2 ITEM NUMBER and DESCRIPTION	COL. 3 ENGINEER'S ESTIMATE OF QUANTITIY	COL. 4 UNIT	COL. 5 UNIT PRICE (IN FIGURES) DOLLARS	CTS	COL. 6 EXTENDED AMOUNT (IN FIGURES) DOLLARS	CTS
158	SL-22.16.07 FURNISH AND INSTALL PENDANT TYPE (TEAR DROP) LED FIXTURE	25.00	EACH				
159	SL-24.02.02 FURNISH AND INSTALL FABRICATED STEEL 8 Ft. ARM ON LAMPPOST OR "M-2" TRAFFIC POLE SHAFT EXTENSION.	9.00	EACH				
160	SL-24.02.03 FURNISH AND INSTALL FABRICATED STEEL 6 Ft. EXTENSION ARM ON LAMPPOST OR "M-2" POLE SHAFT EXTENSION, AS PER DRAWING J-3951.	1.00	EACH				
161	SL-24.02.16 FURNISH AND INSTALL FABRICATED STEEL 6 FT. SHAFT EXTENSION (SINGLE ARM) FOR "M-2" TRAFFIC POST AS PER DWGs H-5159 OR H-5255.	3.00	EACH				
162	SL-24.02.33 FURNISH AND INSTALL FABRICATED STEEL 6Ft. SHAFT EXTENSION (TWIN ARMS) FOR "M-2" TRAFFIC POST AS PER DWGs H-5159, OR H-5255.	2.00	EACH				

NEW YORK CITY DEPARTMENT OF DESIGN AND CONSTRUCTION
DIVISION OF INFRASTRUCTURE - BUREAU OF DESIGN

PROJECT ID: HWMM008
CONTRACT PIN: 8502013HW0020C

BID SCHEDULE FORM

COL. 1 SEQ. NO	COL. 2 ITEM NUMBER and DESCRIPTION	COL. 3 ENGINEER'S ESTIMATE OF QUANTITIY	COL. 4 UNIT	COL. 5 UNIT PRICE (IN FIGURES) DOLLARS	CTS	COL. 6 EXTENDED AMOUNT (IN FIGURES) DOLLARS	CTS
163	**SL-24.04.01** FURNISH AND INSTALL TYPE "BC" SHAFT EXTENSION AND ARM ASSEMBLY WITH PHOTOELECTRIC CONTROL RECEPTACLE FOR "M-2" TRAFFIC POST, AS PER DRAWING H-5264. M-2 ORNAMENTAL CASTINGS FURNISHED AND INSTALLED BY OTHERS.	4.00	EACH				
164	**SL-26.01.01** FURNISH AND INSTALL, OR FURNISH AND REPLACE A PLUG-IN SOLID STATE PHOTOELECTRIC CONTROL	34.00	EACH				
165	**SL-26.06.02** FURNISH AND INSTALL LED FIRE ALARM LUMINAIRES.	1.00	EACH				
166	**T-1.1** INSTALL TYPE "S" OR "T" FOUNDATION	1.00	EACH				
167	**T-1.18** REMOVE TYPE "A", "B", "S" OR "T" SERIES FOUNDATION	1.00	EACH				

NEW YORK CITY DEPARTMENT OF DESIGN AND CONSTRUCTION
DIVISION OF INFRASTRUCTURE - BUREAU OF DESIGN

PROJECT ID: HWMM008
CONTRACT PIN: 8502013HW0020C

BID SCHEDULE FORM

COL. 1 SEQ. NO	COL. 2 ITEM NUMBER and DESCRIPTION	COL. 3 ENGINEER'S ESTIMATE OF QUANTITTY	COL. 4 UNIT	COL. 5 UNIT PRICE (IN FIGURES) DOLLARS	CTS	COL. 6 EXTENDED AMOUNT (IN FIGURES) DOLLARS	CTS
168	T-1.2 INSTALL TYPE "F-1" FOUNDATION	1.00	EACH				
169	T-1.20 REMOVE TYPE "M" SERIES FOUNDATION	11.00	EACH				
170	T-1.29 RAISE OR LOWER FOUNDATION TO GRADE	1.00	EACH				
171	T-1.3 INSTALL TYPE "M2-5S" FOUNDATION	7.00	EACH				
172	T-1.4 INSTALL TYPE "M2-3S" FOUNDATION	2.00	EACH				
173	T-1.6 INSTALL TYPE "M2-5T" FOUNDATION	2.00	EACH				

NEW YORK CITY DEPARTMENT OF DESIGN AND CONSTRUCTION
DIVISION OF INFRASTRUCTURE - BUREAU OF DESIGN

PROJECT ID: HWMM008
CONTRACT PIN: 8502013HW0020C

BID SCHEDULE FORM

COL. 1 SEQ. NO	COL. 2 ITEM NUMBER and DESCRIPTION	COL. 3 ENGINEER'S ESTIMATE OF QUANTITIY	COL. 4 UNIT	COL. 5 UNIT PRICE (IN FIGURES) DOLLARS	CTS	COL. 6 EXTENDED AMOUNT (IN FIGURES) DOLLARS	CTS
174	T-2.1 INSTALL TYPE "S-1" OR "T-1" SERIES POST	1.00	EACH				
175	T-2.16 FURNISH, INSTALL, MAINTAIN AND REMOVE TEMPORARY POST OR PYLON WITH SIGNALS	1.00	EACH				
176	T-2.2 INSTALL TYPE "S-14" POST	1.00	EACH				
177	T-2.22 REMOVE TYPE "S-1" OR "T-1" SERIES POST	1.00	EACH				
178	T-2.24 REMOVE TYPE "M" SERIES POST	11.00	EACH				
179	T-2.28 REMOVE MAST ARM FROM ANY POST	10.00	EACH				

NEW YORK CITY DEPARTMENT OF DESIGN AND CONSTRUCTION
DIVISION OF INFRASTRUCTURE - BUREAU OF DESIGN

PROJECT ID: HWMM008
CONTRACT PIN: 8502013HW0020C

BID SCHEDULE FORM

COL. 1 SEQ. NO	COL. 2 ITEM NUMBER and DESCRIPTION	COL. 3 ENGINEER'S ESTIMATE OF QUANTITIY	COL. 4 UNIT	COL. 5 UNIT PRICE (IN FIGURES) DOLLARS	CTS	COL. 6 EXTENDED AMOUNT (IN FIGURES) DOLLARS	CTS
180	T-2.4 INSTALL TYPE "M-2" POST	11.00	EACH				
181	T-20000 FURNISH TEN FOOT ALUMINUM SIGNAL POST TYPE "S-1"	1.00	EACH				
182	T-20020 a) FURNISH 3/4" ANCHOR BOLT ASSEMBLIES FOR S-1 (EACH) (3 REQUIRED PER POST)	3.00	EACH				
183	T-20021 b) FURNISH 1" ANCHOR BOLT ASSEMBLIES FOR F-1 (EACH) (4 REQUIRED PER POST)	4.00	EACH				
184	T-20160 FURNISH 20 FOOT SIGNAL MAST ARM POLE ASSEMBLY TYPE "M-2"	11.00	EACH				
185	T-20184 a) FURNISH 5' EXTENSION ARM ASSEMBLY WITH FITTINGS	7.00	EACH				

NEW YORK CITY DEPARTMENT OF DESIGN AND CONSTRUCTION
DIVISION OF INFRASTRUCTURE - BUREAU OF DESIGN

PROJECT ID: HWMM008
CONTRACT PIN: 8502013HW0020C

BID SCHEDULE FORM

COL. 1 SEQ. NO	COL. 2 ITEM NUMBER and DESCRIPTION	COL. 3 ENGINEER'S ESTIMATE OF QUANTITIY	COL. 4 UNIT	COL. 5 UNIT PRICE (IN FIGURES) DOLLARS	CTS	COL. 6 EXTENDED AMOUNT (IN FIGURES) DOLLARS	CTS
186	T-20220 c) FURNISH 1-1/4" ANCHOR BOLT ASSEMBLIES FOR M-2 (EACH) (4 REQUIRED PER POST)	44.00	EACH				
187	T-20640 FURNISH ALUMINUM TRAFFIC SIGNAL POST TYPE "S-14"	1.00	EACH				
188	T-3.1 INSTALL "ONE-WAY" SIGNAL UNIT ON MAST ARM OR TOP OF TRAFFIC POST	23.00	EACH				
189	T-3.18 REMOVE SIGNAL HEAD FROM ANY TYPE POST	15.00	EACH				
190	T-3.2 INSTALL "ONE-WAY" SIGNAL UNIT ON THE SHAFT OF ANY POST	4.00	EACH				
191	T-3.21 REMOVE PEDESTRIAN SIGNAL OR SIGN UNIT OR OTHER ILLUMINATED SIGNS FROM ANY POST	30.00	EACH				

NEW YORK CITY DEPARTMENT OF DESIGN AND CONSTRUCTION
DIVISION OF INFRASTRUCTURE - BUREAU OF DESIGN

PROJECT ID: HWMM008
CONTRACT PIN: 8502013HW0020C

BID SCHEDULE FORM

COL. 1	COL. 2	COL. 3	COL. 4	COL. 5		COL. 6	
		ENGINEER'S ESTIMATE		UNIT PRICE (IN FIGURES)		EXTENDED AMOUNT (IN FIGURES)	
SEQ. NO	ITEM NUMBER and DESCRIPTION	OF QUANTITIY	UNIT	DOLLARS	CTS	DOLLARS	CTS
192	T-3.26 REMOVE STREET LIGHT LUMINAIRE AND PHOTO ELECTRIC CONTROL FROM STREET LIGHT ARM	2.00	EACH				
193	T-3.27 INSTALL STREET LIGHT LUMINAIRE AND PHOTO ELECTRIC CONTROL ON STREET LIGHT MAST	2.00	EACH				
194	T-3.6 INSTALL PEDESTRIAN SIGNAL ON ANY TYPE POST	34.00	EACH				
195	T-30013L FURNISH ADJST 3 SCTN 1-WAY TRAFFIC SIGNAL, 8" - W/LED LENS	27.00	EACH				
196	T-31150 FURNISH "1SA" ALUMINUM DIE CASTINGS AND ASSEMBLY FOR POST SIGNAL MOUNTING	1.00	EACH				
197	T-31200 e) "VB" ASSEMBLY *ASSEMBLY IS EQUAL TO ONE PAIR	4.00	EACH				

NEW YORK CITY DEPARTMENT OF DESIGN AND CONSTRUCTION
DIVISION OF INFRASTRUCTURE - BUREAU OF DESIGN

PROJECT ID: HWMM008
CONTRACT PIN: 8502013HW0020C

BID SCHEDULE FORM

COL. 1 SEQ. NO	COL. 2 ITEM NUMBER and DESCRIPTION	COL. 3 ENGINEER'S ESTIMATE OF QUANTITIY	COL. 4 UNIT	COL. 5 UNIT PRICE (IN FIGURES) DOLLARS	CTS	COL. 6 EXTENDED AMOUNT (IN FIGURES) DOLLARS	CTS
198	T-31205 FURNISH MAST ARM SIGNAL MOUNTING ASSEMBLY - a) "1MS"	3.00	EACH				
199	T-31210 h) "HUB" ASSEMBLY *ASSEMBLY IS EQUAL TO ONE PAIR	22.00	EACH				
200	T-31215 b) "2MS"	5.00	EACH				
201	T-31225 c) "3MS"	3.00	EACH				
202	T-31340 f) "VB-P" ASSEMBLY *ASSEMBLY IS EQUAL TO ONE PAIR	4.00	EACH				
203	T-31351 g) "VB-2P" ASSEMBLY *ASSEMBLY IS EQUAL TO ONE PAIR	16.00	EACH				

NEW YORK CITY DEPARTMENT OF DESIGN AND CONSTRUCTION
DIVISION OF INFRASTRUCTURE - BUREAU OF DESIGN

PROJECT ID: HWMM008
CONTRACT PIN: 8502013HW0020C

BID SCHEDULE FORM

COL. 1 SEQ. NO	COL. 2 ITEM NUMBER and DESCRIPTION	COL. 3 ENGINEER'S ESTIMATE OF QUANTITIY	COL. 4 UNIT	COL. 5 UNIT PRICE (IN FIGURES) DOLLARS	CTS	COL. 6 EXTENDED AMOUNT (IN FIGURES) DOLLARS	CTS
204	**T-33000L** FURNISH POLYCARBONATE INCANDESCENT PED SIGNAL W/LED LENS	3.00	EACH				
205	**T-33001-L** FURNISH POLYCARBONATE PEDESTRIAN SIGNAL (16 X 16) W/LED COUNT LENS (SPECIFICATION A-L)	31.00	EACH				
206	**T-4.22** INSTALL ANY TYPE OF ADVANCED SOLID STATE TRAFFIC SIGNAL CONTROLLER AND CABINET ON METAL POLE	3.00	EACH				
207	**T-4.8** REMOVE ONE CONTROL BOX AND CONTROLLER FROM ANY POST OR SUPPORT	3.00	EACH				
208	**T-5.1** FURNISH AND INSTALL 2" RIGID UNDERGROUND CONDUIT IN UNPAVED ROADWAY	62.00	L.F.				
209	**T-5.2** FURNISH AND INSTALL 2" RIGID UNDERGROUND CONDUIT IN PAVED ROADWAY	1,113.00	L.F.				

NEW YORK CITY DEPARTMENT OF DESIGN AND CONSTRUCTION
DIVISION OF INFRASTRUCTURE - BUREAU OF DESIGN

PROJECT ID: HWMM008
CONTRACT PIN: 8502013HW0020C

BID SCHEDULE FORM

COL. 1	COL. 2	COL. 3	COL. 4	COL. 5 UNIT PRICE (IN FIGURES)		COL. 6 EXTENDED AMOUNT (IN FIGURES)	
SEQ. NO	ITEM NUMBER and DESCRIPTION	ENGINEER'S ESTIMATE OF QUANTITIY	UNIT	DOLLARS	CTS	DOLLARS	CTS
210	**T-5.3** FURNISH AND INSTALL 2" RIGID UNDERGROUND CONDUIT IN PAVED SIDEWALK	50.00	L.F.				
211	**T-5.32** RESTORING PERMANENT ROADWAY (INCLUDING SAWCUT)	900.00	L.F.				
212	**T-5.34** RESTORING PERMANENT SIDEWALK	50.00	S.F.				
213	**T-5.7** FURNISH AND INSTALL ADDITIONAL 2" RIGID UNDERGROUND CONDUIT	50.00	L.F.				
214	**T-6.1** INSTALL CABLE (INCLUDES OVERHEAD)	1,000.00	L.F.				
215	**T-6.10** REMOVE CABLE (INCLUDES OVERHEAD)	2,700.00	L.F.				

NEW YORK CITY DEPARTMENT OF DESIGN AND CONSTRUCTION
DIVISION OF INFRASTRUCTURE - BUREAU OF DESIGN

PROJECT ID: HWMM008
CONTRACT PIN: 8502013HW0020C

BID SCHEDULE FORM

COL. 1 SEQ. NO	COL. 2 ITEM NUMBER and DESCRIPTION	COL. 3 ENGINEER'S ESTIMATE OF QUANTITIY	COL. 4 UNIT	COL. 5 UNIT PRICE (IN FIGURES) DOLLARS	CTS	COL. 6 EXTENDED AMOUNT (IN FIGURES) DOLLARS	CTS
216	**T-6.2** INSTALL MULTIPLE CABLE (INCLUDES OVERHEAD)	2,700.00	L.F.				
217	**T-60000B** FURNISH 2 c # 10B (SEE SPEC) (BREAKDOWN = 2#10 WITH 3RD WIRE FOR GROUNDING).	3,000.00	L.F.				
218	**T-60040** c) 7 CONDUCTOR, 14 A.W.G.	1,000.00	L.F.				
219	**T-60190** e) 13 CONDUCTOR, 14 A.W.G.	3,500.00	L.F.				
220	**T-7.53** REMOVE (2418) HAND BOX OR PULL BOX IN PAVED SIDEWALK	1.00	EACH				
221	**T-8.10** RELOCATE CONCRETE PYLON WITH POST	8.00	EACH				

NEW YORK CITY DEPARTMENT OF DESIGN AND CONSTRUCTION
DIVISION OF INFRASTRUCTURE - BUREAU OF DESIGN

PROJECT ID: HWMM008
CONTRACT PIN: 8502013HW0020C

BID SCHEDULE FORM

COL. 1 SEQ. NO	COL. 2 ITEM NUMBER and DESCRIPTION	COL. 3 ENGINEER'S ESTIMATE OF QUANTITIY	COL. 4 UNIT	COL. 5 UNIT PRICE (IN FIGURES) DOLLARS	CTS	COL. 6 EXTENDED AMOUNT (IN FIGURES) DOLLARS	CTS
222	**T-8.8** INSTALL CONCRETE PYLON	8.00	EACH				
223	**T-8.9** REMOVE CONCRETE PYLON	8.00	EACH				
224	**T-81000** FURNISH CONCRETE PYLON	8.00	EACH				
225	**UTL-6.01.8** GAS SERVICES CROSSING TRENCHES AND/OR EXCAVATIONS (S6.01) **Unit price bid shall not be less than: $ 465.00**	20.00	EACH				
226	**UTL-6.01.9** GAS MAIN CROSSING WATER MAIN UP TO 20" IN DIAMETER (S6.01) **Unit price bid shall not be less than: $ 485.00**	23.00	EACH				
227	**UTL-6.03** REMOVAL OF ABANDONED GAS FACILITIES. ALL SIZES. (S6.03) **Unit price bid shall not be less than: $ 15.00**	800.00	L.F.				

NEW YORK CITY DEPARTMENT OF DESIGN AND CONSTRUCTION
DIVISION OF INFRASTRUCTURE - BUREAU OF DESIGN

PROJECT ID: HWMM008
CONTRACT PIN: 8502013HW0020C

BID SCHEDULE FORM

COL. 1 SEQ. NO	COL. 2 ITEM NUMBER and DESCRIPTION	COL. 3 ENGINEER'S ESTIMATE OF QUANTITIY	COL. 4 UNIT	COL. 5 UNIT PRICE (IN FIGURES) DOLLARS	CTS	COL. 6 EXTENDED AMOUNT (IN FIGURES) DOLLARS	CTS
228	**UTL-6.04** ADJUST HARDWARE TO GRADE USING SPACER RINGS/ADAPTORS. (STREET REPAVING.) (S6.04) **Unit price bid shall not be less than: $ 35.00**	70.00	EACH				
229	**UTL-6.05** ADJUST HARDWARE TO GRADE BY RESETTING. (ROAD RECONSTRUCTION.) (S6.05) **Unit price bid shall not be less than: $ 65.00**	50.00	EACH				
230	**UTL-6.06** SPECIAL CARE EXCAVATION AND BACKFILLING (S6.06) **Unit price bid shall not be less than: $ 180.00**	800.00	C.Y.				
231	**UTL-6.07** TEST PITS FOR GAS FACILITIES (S6.07) **Unit price bid shall not be less than: $ 100.00**	300.00	C.Y.				
232	**UTL-GCS-2WS** GAS INTERFERENCES AND ACCOMMODATIONS **PRICE BID SHALL BE FOR THE FIXED SUM OF $ 60,000.00**	1.00	F.S.	60,000	00	60,000	00

NEW YORK CITY DEPARTMENT OF DESIGN AND CONSTRUCTION
DIVISION OF INFRASTRUCTURE - BUREAU OF DESIGN

PROJECT ID: HWMM008
CONTRACT PIN: 8502013HW0020C

BID SCHEDULE FORM

COL. 1 SEQ. NO	COL. 2 ITEM NUMBER and DESCRIPTION	COL. 3 ENGINEER'S ESTIMATE OF QUANTITIY	COL. 4 UNIT	COL. 5 UNIT PRICE (IN FIGURES) DOLLARS . CTS	COL. 6 EXTENDED AMOUNT (IN FIGURES) DOLLARS . CTS

SUB-TOTAL: $ _____

233	6.39 A MOBILIZATION BID PRICE OF MOBILIZATION SHALL NOT EXCEED 4% OF THE ABOVE SUB-TOTAL PRICE.	1.00	L.S.		

TOTAL BID PRICE: $ _____

PLEASE BE SURE A LEGIBLE BID IS ENTERED FOR EACH ITEM.
THE BIDDER SHALL INSERT THE TOTAL BID PRICE IN
THE BID FORM ON PAGE C-4 OF THIS BID BOOKLET.

BID FORM
THE CITY OF NEW YORK
DEPARTMENT OF DESIGN AND CONSTRUCTION
DIVISION OF INFRASTRUCTURE

BID FOR FURNISHING ALL LABOR AND MATERIAL NECESSARY AND REQUIRED FOR:

PROJECT ID: HWMM008

SAFETY AND STREETSCAPE IMPROVEMENTS
EAST 86TH STREET BETWEEN PARK AVENUE AND SECOND AVENUE

SCHOOL SAFETY NECKDOWNS
MADISON AVENUE BETWEEN EAST 84TH STREET AND EAST 85TH STREET

INCLUDING WATER MAIN, STREET LIGHTING, AND TRAFFIC SIGNAL WORK

Together With All Work Incidental Thereto

BOROUGH OF MANHATTAN
CITY OF NEW YORK

Name of Bidder: Triumph Construction Corp

Date of Bid Opening: 7/9/15

Bidder is: (Check one, whichever applies) Individual ( ) Partnership ( ) Corporation (✓)

Place of Business of Bidder: 1354 Seneca ave Bronx NY 10474

Bidder's Telephone Number: 718-861-6060 Fax Number: 718-861-6060

Bidder's E-Mail Address: DCuzzi@TriumphConstCorp.Com

Residence of Bidder (If Individual): _____

If Bidder is a Partnership, fill in the following blanks:

Names of Partners	Residence of Partners

If Bidder is a Corporation, fill in the following blanks:
Organized under the laws of the State of New York

Name and Home Address of President: 45 Winchester oval
New Rochelle NY 10805

Name and Home Address of Secretary: _____

Name and Home Address of Treasurer: _____

BID FORM

Triumph Const. Corp

The above-named Bidder affirms and declares:

1. The said bidder is of lawful age and the only one interested in this bid; and no person, firm or corporation other than hereinbefore named has any interest in this bid, or in the Contract proposed to be taken.

2. By submission of this bid, each bidder and each person signing on behalf of any bidder certifies, and in the case of a joint bid each party thereto certifies as to its own organization, under penalty of perjury, that to the best of its knowledge and belief: (1) the prices in this bid have been arrived at independently without collusion, consultation, communication or agreement, for the purpose of restricting competition, as to any matter relating to such prices with any other bidder or with any competitor; (2) unless otherwise required by law, the prices quoted in this bid have not been knowingly disclosed by the bidder and will not knowingly be disclosed by the bidder prior to opening, directly or indirectly, to any other bidder or to any competitor; and (3) No attempt has been made or will be made by the bidder to induce any other person, partnership or corporation to submit or not to submit a bid for the purpose of restricting competition.

3. No councilman or other officer or employee or person whose salary is payable in whole or in part from the City Treasury is directly or indirectly interested in this bid, or in the supplies, materials, equipment, work or labor to which it relates, or in any of the profits thereof.

4. The bidder is not in arrears to the City of New York upon debt or contract or taxes, and is not a defaulter, as surety or otherwise, upon any obligation of the City of New York, and has not been declared not responsible, or disqualified, by any agency of the City of New York or State of New York, nor is there any proceeding pending relating to the responsibility or qualification of the bidder to receive public contracts except as set forth on the Affirmation included as page C-6 of this Bid Booklet.

The bidder hereby affirms that it has paid all applicable City income, excise and other taxes for all years it has conducted business activities in New York City.

5. The bidder, as an individual, or as a member, partner, director or officer of the bidder, if the same be a firm, partnership or corporation, executes this document expressly warranting and representing that should this bid be accepted by the City and the Contract awarded to him, he and his subcontractors engaged in the performance: (1) will comply with the provisions of Section 6-108 of the Administrative Code of the City of New York and the non-discrimination provisions of Section 220a of the New York State Labor Law, as more expressly and in detail set forth in the Agreement; (2) will comply with Section 6-109 of the Administrative Code of the City of New York in relation to minimum wages and other stipulations as more expressly and in detail set forth in the Agreement; (3) have complied with the provisions of the aforesaid laws since their respective effective dates, and (4) will post notices to be furnished by the City, setting forth the requirements of the aforesaid laws in prominent and conspicuous places in each and every plant, factory, building and structure where employees engaged in the performance of the Contract can readily view it, and will continue to keep such notices posted until the supplies, materials and equipment, or work labor and services required to be furnished or rendered by the Contractor have been finally accepted by the City. In the event of any breach or violation of the foregoing, the Contractor may be subject to damages, liquidated or otherwise, cancellation of the Contract and suspension as a bidder for a period of three years. (The words, "the bidder", "he", "his", and "him" where used herein shall mean the individual bidder, firm, partnership or corporation executing this bid).

6. Compliance Report

The bidder, as an individual, or as a member, partner, director, or officer of the bidder, if the same be a firm, partnership, or corporation, (1) represents that his attention has been specifically drawn to Executive Order No. 50, dated, April 25, 1980, on Equal Employment Compliance of the contract, and (2) warrants that he will comply with the provisions of Executive Order No. 50. The Employment Report must be submitted as part of the bid.

The bidder, as an individual, or as a member, partner, director, or officer of the bidder, if the same be a firm, partnership, or corporation, executes this document expressly warranting that he will comply with: (1) the provision of the contract on providing records, Chapter 8.

7. By submission of this bid, the bidder certifies that it now has and will continue to have the financial capability to fully perform the work required for this contract. Any award of this contract will be made in reliance upon such certification. Upon request therefor, the bidder will submit written verification of such financial capability in a form that is acceptable to the department.

8. In accordance with Section 165 of the State Finance Law, the bidder agrees that tropical hardwoods, as defined in Section 165 of the State Finance Law, shall not be utilized in the performance of this Contract, except as the same are permitted by the foregoing provision of law.

9. The bidder has visited and examined the site of the work and has carefully examined the Contract in the form approved by the Corporation Counsel, and will execute the Contract and perform all its items, covenants and conditions, and will provide, furnish and deliver all the work, materials, supplies, tools and appliances for all labor and materials necessary or required for the hereinafter named work, all in strict conformity with the Contract, for the prices set forth in the Bid Schedule:

BID FORM

PROJECT ID. HWMM008

TOTAL BID PRICE: In the space provided below, the Bidder shall indicate its Total Bid Price in figures. Such Total Bid Price is set forth on the final page of the Bid Schedule.

TOTAL BID PRICE:
(a/k/a BID PROPOSAL)

$ 10,556,199.64
BB 7/9/15

BIDDER'S SIGNATURE AND AFFIDAVIT

Bidder: Triumph Const Corp.

By: _____
(Signature of Partner or corporate officer)

_____

Attest:
(Corporate Seal)

Secretary of Corporate Bidder

Affidavit on the following page should be subscribed
and sworn to before a Notary Public

BID FORM (TO BE NOTARIZED)

AFFIDAVIT WHERE BIDDER IS AN INDIVIDUAL

STATE OF NEW YORK, COUNTY OF_____ ss:

_____ being duly sworn says:

I am the person described in and who executed the foregoing bid, and the several matters therein stated are in all respects true.

_____

(Signature of the person who signed the Bid)

Subscribed and sworn to before me this

_____ day of_____, _____

_____

Notary Public

AFFIDAVIT WHERE BIDDER IS A PARTNERSHIP

STATE OF NEW YORK, COUNTY OF_____ ss:

_____ being duly sworn says:

I am a member of _____ the firm described in and which executed the foregoing bid. I subscribed the name of the firm thereto on behalf of the firm, and the several matters therein stated are in all respects true.

_____

(Signature of Partner who signed the Bid)

Subscribed and sworn to before me this

_____ day of_____, _____

_____

Notary Public

AFFIDAVIT WHERE BIDDER IS A CORPORATION

STATE OF NEW YORK, COUNTY OF Bronx ss:

Carlo Cutri being duly sworn says:

I am the President of the above named corporation whose name is subscribed to and which executed the foregoing bid. I reside at 45 Winchester Road New Rochelle NY 10805

I have knowledge of the several matters therein stated, and they are in all respects true.

_____

(Signature of Corporate Officer who signed the Bid)

Subscribed and sworn to before me this

9th day of July, 2015

SHIRLEY JACOBS
NOTARY PUBLIC-STATE OF NEW YORK
No. 01JA6078625
Qualified in Westchester County
My Commission Expires August 05, 2018

_____

Notary Public

AFFIRMATION

PROJECT ID: HWMM008

The undersigned bidder affirms and declares that said bidder is not in arrears to the City of New York upon debt, contract or taxes and is not a defaulter, as surety or otherwise, upon obligation to the City of New York, and has not been declared not responsible, or disqualified, by any agency of the City of New York, nor is there any proceeding pending relating to the responsibility or qualification of the bidder to receive public contracts except: None

(If none, the bidder shall insert the word "None" in the space provided above.)

Full Name of Bidder: Triumph Const. Corp.
Address: 1354 Seneca Ave
City Bronx State NY Zip Code 10474

CHECK ONE BOX AND INCLUDE APPROPRIATE NUMBER:

/__/ A - Individual or Sole Proprietorship*
SOCIAL SECURITY NUMBER

/__/ B - Partnership, Joint Venture or other unincorporated organization
EMPLOYER IDENTIFICATION NUMBER

/✓/ C- Corporation
EMPLOYER IDENTIFICATION NUMBER
134050635

By: _____
Signature

Title: President

If a corporation, place seal here

This affirmation must be signed by an officer or duly authorized representative.

*Under the Federal Privacy Act the furnishing of Social Security Numbers by bidders on City contracts is voluntary. Failure to provide a Social Security Number will not result in a bidder's disqualification. Social Security Numbers will be used to identify bidders, proposers or vendors to ensure their compliance with laws, to assist the City in enforcement of laws, as well as to provide the City a means of identifying of businesses which seek City contracts.

BID FORM
THE CITY OF NEW YORK
DEPARTMENT OF DESIGN AND CONSTRUCTION
DIVISION OF INFRASTRUCTURE

BID FOR FURNISHING ALL LABOR AND MATERIAL NECESSARY AND REQUIRED FOR:

PROJECT ID: HWMM008

SAFETY AND STREETSCAPE IMPROVEMENTS
EAST 86TH STREET BETWEEN PARK AVENUE AND SECOND AVENUE

SCHOOL SAFETY NECKDOWNS
MADISON AVENUE BETWEEN EAST 84TH STREET AND EAST 85TH STREET

INCLUDING WATER MAIN, STREET LIGHTING, AND TRAFFIC SIGNAL WORK

Together With All Work Incidental Thereto

BOROUGH OF MANHATTAN
CITY OF NEW YORK

Name of Bidder: _____

Date of Bid Opening: _____

Bidder is: (Check one, whichever applies) Individual ( ) Partnership ( ) Corporation ( )

Place of Business of Bidder: _____

Bidder's Telephone Number: _____ Fax Number: _____

Bidder's E-Mail Address: _____

Residence of Bidder (If Individual): _____

If Bidder is a Partnership, fill in the following blanks:

Names of Partners	Residence of Partners
_____	_____
_____	_____
_____	_____

If Bidder is a Corporation, fill in the following blanks:
Organized under the laws of the State of _____

Name and Home Address of President: _____

_____

Name and Home Address of Secretary: _____

_____

Name and Home Address of Treasurer: _____

_____

BID FORM

The above-named Bidder affirms and declares:

1. The said bidder is of lawful age and the only one interested in this bid; and no person, firm or corporation other than hereinbefore named has any interest in this bid, or in the Contract proposed to be taken.

2. By submission of this bid, each bidder and each person signing on behalf of any bidder certifies, and in the case of a joint bid each party thereto certifies as to its own organization, under penalty of perjury, that to the best of its knowledge and belief: (1) the prices in this bid have been arrived at independently without collusion, consultation, communication or agreement, for the purpose of restricting competition, as to any matter relating to such prices with any other bidder or with any competitor; (2) unless otherwise required by law, the prices quoted in this bid have not been knowingly disclosed by the bidder and will not knowingly be disclosed by the bidder prior to opening, directly or indirectly, to any other bidder or to any competitor; and (3) No attempt has been made or will be made by the bidder to induce any other person, partnership or corporation to submit or not to submit a bid for the purpose of restricting competition.

3. No councilman or other officer or employee or person whose salary is payable in whole or in part from the City Treasury is directly or indirectly interested in this bid, or in the supplies, materials, equipment, work or labor to which it relates, or in any of the profits thereof.

4. The bidder is not in arrears to the City of New York upon debt or contract or taxes, and is not a defaulter, as surety or otherwise, upon any obligation of the City of New York, and has not been declared not responsible, or disqualified, by any agency of the City of New York or State of New York, nor is there any proceeding pending relating to the responsibility or qualification of the bidder to receive public contracts except as set forth on the Affirmation included as page C-6 of this Bid Booklet.

The bidder hereby affirms that it has paid all applicable City income, excise and other taxes for all years it has conducted business activities in New York City.

5. The bidder, as an individual, or as a member, partner, director or officer of the bidder, if the same be a firm, partnership or corporation, executes this document expressly warranting and representing that should this bid be accepted by the City and the Contract awarded to him, he and his subcontractors engaged in the performance: (1) will comply with the provisions of Section 6-108 of the Administrative Code of the City of New York and the non-discrimination provisions of Section 220a of the New York State Labor Law, as more expressly and in detail set forth in the Agreement; (2) will comply with Section 6-109 of the Administrative Code of the City of New York in relation to minimum wages and other stipulations as more expressly and in detail set forth in the Agreement; (3) have complied with the provisions of the aforesaid laws since their respective effective dates, and (4) will post notices to be furnished by the City, setting forth the requirements of the aforesaid laws in prominent and conspicuous places in each and every plant, factory, building and structure where employees engaged in the performance of the Contract can readily view it, and will continue to keep such notices posted until the supplies, materials and equipment, or work labor and services required to be furnished or rendered by the Contractor have been finally accepted by the City. In the event of any breach or violation of the foregoing, the Contractor may be subject to damages, liquidated or otherwise, cancellation of the Contract and suspension as a bidder for a period of three years. (The words, "the bidder", "he", "his", and "him" where used herein shall mean the individual bidder, firm, partnership or corporation executing this bid).

6. Compliance Report

The bidder, as an individual, or as a member, partner, director, or officer of the bidder, if the same be a firm, partnership, or corporation, (1) represents that his attention has been specifically drawn to Executive Order No. 50, dated, April 25, 1980, on Equal Employment Compliance of the contract, and (2) warrants that he will comply with the provisions of Executive Order No. 50. The Employment Report must be submitted as part of the bid.

The bidder, as an individual, or as a member, partner, director, or officer of the bidder, if the same be a firm, partnership, or corporation, executes this document expressly warranting that he will comply with: (1) the provision of the contract on providing records, Chapter 8.

7. By submission of this bid, the bidder certifies that it now has and will continue to have the financial capability to fully perform the work required for this contract. Any award of this contract will be made in reliance upon such certification. Upon request therefor, the bidder will submit written verification of such financial capability in a form that is acceptable to the department.

8. In accordance with Section 165 of the State Finance Law, the bidder agrees that tropical hardwoods, as defined in Section 165 of the State Finance Law, shall not be utilized in the performance of this Contract, except as the same are permitted by the foregoing provision of law.

9. The bidder has visited and examined the site of the work and has carefully examined the Contract in the form approved by the Corporation Counsel, and will execute the Contract and perform all its items, covenants and conditions, and will provide, furnish and deliver all the work, materials, supplies, tools and appliances for all labor and materials necessary or required for the hereinafter named work, all in strict conformity with the Contract, for the prices set forth in the Bid Schedule:

(NO TEXT ON THIS PAGE)

BID FORM

PROJECT ID. HWMM008

TOTAL BID PRICE: In the space provided below, the Bidder shall indicate its Total Bid Price in figures. Such Total Bid Price is set forth on the final page of the Bid Schedule.

TOTAL BID PRICE:
(a/k/a BID PROPOSAL) $_____

BIDDER'S SIGNATURE AND AFFIDAVIT

Bidder:_____

By: _____
(Signature of Partner or corporate officer)

_____

Attest: Secretary of Corporate Bidder
(Corporate Seal)

Affidavit on the following page should be subscribed
and sworn to before a Notary Public

BID FORM (TO BE NOTARIZED)

AFFIDAVIT WHERE BIDDER IS AN INDIVIDUAL

STATE OF NEW YORK, COUNTY OF_____ ss:

_____ being duly sworn says:

I am the person described in and who executed the foregoing bid, and the several matters therein stated are in all respects true.

_____

(Signature of the person who signed the Bid)

Subscribed and sworn to before me this

_____ day of_____, _____

_____

Notary Public

AFFIDAVIT WHERE BIDDER IS A PARTNERSHIP

STATE OF NEW YORK, COUNTY OF_____ ss:

_____ being duly sworn says:

I am a member of _____ the firm described in and which executed the foregoing bid. I subscribed the name of the firm thereto on behalf of the firm, and the several matters therein stated are in all respects true.

_____

(Signature of Partner who signed the Bid)

Subscribed and sworn to before me this

_____ day of_____, _____

_____

Notary Public

AFFIDAVIT WHERE BIDDER IS A CORPORATION

STATE OF NEW YORK, COUNTY OF_____ ss:

_____ being duly sworn says:

I am the _____ of the above named corporation whose name is subscribed to and which executed the foregoing bid. I reside at _____.

I have knowledge of the several matters therein stated, and they are in all respects true.

_____

(Signature of Corporate Officer who signed the Bid)

Subscribed and sworn to before me this

_____ day of_____, _____

_____

Notary Public

AFFIRMATION

PROJECT ID: HWMM008

The undersigned bidder affirms and declares that said bidder is not in arrears to the City of New York upon debt, contract or taxes and is not a defaulter, as surety or otherwise, upon obligation to the City of New York, and has not been declared not responsible, or disqualified, by any agency of the City of New York, nor is there any proceeding pending relating to the responsibility or qualification of the bidder to receive public contracts except: _____

_____

(If none, the bidder shall insert the word "None" in the space provided above.)

Full Name of Bidder: _____

Address: _____

City _____ State _____ Zip Code _____

CHECK ONE BOX AND INCLUDE APPROPRIATE NUMBER:

/__/ A - Individual or Sole Proprietorship*
SOCIAL SECURITY NUMBER

- - - - - - - - - - - -

B - Partnership, Joint Venture or other unincorporated organization
/__/ EMPLOYER IDENTIFICATION NUMBER

- - - - - - - - - - - -

C- Corporation
/__/ EMPLOYER IDENTIFICATION NUMBER

- - - - - - - - - - - -

By: _____
Signature

Title: _____

If a corporation, place seal here

This affirmation must be signed by an officer or duly authorized representative.

*Under the Federal Privacy Act the furnishing of Social Security Numbers by bidders on City contracts is voluntary. Failure to provide a Social Security Number will not result in a bidder's disqualification. Social Security Numbers will be used to identify bidders, proposers or vendors to ensure their compliance with laws, to assist the City in enforcement of laws, as well as to provide the City a means of identifying of businesses which seek City contracts.

(NO TEXT ON THIS PAGE)

BID BOND 1
FORM OF BID BOND

KNOW ALL MEN BY THESE PRESENTS. That we, Triumph Construction Corp.

hereinafter referred to as the "Principal", and Liberty Mutual Insurance Company

hereinafter referred to as the "Surety" are held and firmly bound to THE CITY OF NEW YORK, hereinafter referred to as the "CITY", or to its successors and assigns in the penal sum of

Ten Percent of the Amount Bid

($ 10%), Dollars lawful money of the United States, for the payment of which said sum of money well and truly to be made, we, and each of us, bind ourselves, our heirs, executors, administrators, successors and assigns, jointly and severally, firmly by these presents.

Whereas, the Principal is about to submit (or has submitted) to the City the accompanying proposal, hereby made a part hereof, to enter into a contract in writing for FMS Project ID# HWMM008

Safety and Streetscape Improvements/School Safety Neckdowns, Borough of Manhattan, City of New York -

PIN# 8502013HW0020C

NOW, THEREFORE, the conditions of this obligation are such that if the Principal shall not withdraw said Proposal without the consent of the City for a period of forty-five (45) days after the opening of bids and in the event of acceptance of the Principal's Proposal by the City, if the Principal shall:

(a) Within ten (10) days after notification by the City, execute in quadruplicate and deliver to the City all the executed counterparts of the Contract in the form set forth in the Contract Documents, in accordance with the proposal as accepted, and

(b) Furnish a performance bond and separate payment bond, as may be required by the City, for the faithful performance and proper fulfillment of such Contract, which bonds shall be satisfactory in all respects to the City and shall be executed by good and sufficient sureties, and

(c) In all respects perform the agreement created by the acceptance of said Proposal as provided in the Information for Bidders, bound herewith and made a part hereof, or if the City shall reject the aforesaid Proposal, then this obligation shall be null and void; otherwise to remain in full force and effect.

BID BOND 2

In the event that the Proposal of the Principal shall be accepted and the Contract be awarded to him the Surety hereunder agrees subject only to the payment by the Principal of the premium therefore, if requested by the City, to write the aforementioned performance and payment bonds in the form set forth in the Contract Documents.

It is expressly understood and agreed that the liability of the Surety for any and all claims hereunder shall in no event exceed the penal amount of this obligation as herein stated.

There shall be no liability under this bond if, in the event of the acceptance of the Principal's Proposal by the City, either a performance bond or payment bond, or both, shall not be required by the City on or before the 30th day after the date on which the City signs the Contract.

The surety, for the value received, hereby stipulates and agrees that the obligations of the Surety and its bond shall in no way be impaired or affected by any postponements of the date upon which the City will receive or open bids, or by any extensions of the time within which the City may accept the Principal's Proposal, or by any waiver by the City of any of the requirements of the Information for Bidders, and the Surety hereby waives notice of any such postponements, extensions, or waivers.

IN WITNESS WHEREOF, the Principal and the Surety have hereunto set their hands and seals and such of them as are corporations have caused their corporate seals to be hereto affixed and these presents to be signed by their proper officers the 9th day of July, 2015.

(Seal) Triumph Construction Corp. (L.S.)

Principal

By: _____

(Seal) Liberty Mutual Insurance Company

Surety

By: Nicole T. Broderick

Nicole T. Broderick, Attorney-in-Fact

Attorney in Fact

BID BOND 3

ACKNOWLEDGMENT OF PRINCIPAL, IF A CORPORATION

State of New York County of Bronx ss:
On this 9th day of July, 2015, before me personally came
[illegible] to me known, who, being by me duly sworn, did depose and say
that he resides at 45 Winchester Blvd New Rochelle, NY
that he is the Pres of Triumph Construction Corp.
the corporation described in and which executed the foregoing instrument; that he knows the seal of said corporation; that one of the seals affixed to said instrument is such seal; that it was so affixed by order of the directors of said corporation, and that he signed his name thereto by like order.

SHIRLEY JACOBS
NOTARY PUBLIC-STATE OF NEW YORK
No. 01JA6078625
Qualified in Westchester County
My Commission Expires August 05, 20[illegible]

Notary Public

ACKNOWLEDGMENT OF PRINCIPAL, IF A PARTNERSHIP

State of _____ County of _____ ss:
On this _____ day of _____, _____, before me personally appeared
_____ to me known and known to me to be one of the members of the
firm of _____ described in and who executed the foregoing instrument, and he acknowledged to me that he executed the same as and for the act and deed of said firm.

_____
Notary Public

ACKNOWLEDGMENT OF PRINCIPAL, IF AN INDIVIDUAL

State of _____ County of _____ ss:
On this _____ day of _____, _____, before me personally appeared
_____ to me known and known to me to be the person described in and who executed the foregoing instrument and acknowledged that he executed the same.

_____
Notary Public

AFFIX ACKNOWLEDGMENTS AND JUSTIFICATION OF SURETIES

SURETY ACKNOWLEDGMENT

State of **New Jersey**

County of **Union**

On this **9th** day of **July**, **2015**, Before me personally came **Nicole T. Broderick** to me known, who being by me duly sworn, did depose and say that he/she is an Attorney-in-Fact of **Liberty Mutual Insurance Company** corporation described in and which executed the within instrument; that he/she knows the corporate seal of said corporation; that the seal affixed to the within instrument is such corporate seal, and that he/she signed the said instrument and affixed the said seal as Attorney-in-Fact by authority of the Board of Directors of said corporation and by authority of this office under the Standing Resolutions thereof.

CHERYL R. COLEMAN
Notary Public, State of New Jersey
No. 01CO2182370
Commission Expires Sept. 27, 2015

My commission expires

Cheryl R. Coleman

THIS POWER OF ATTORNEY IS NOT VALID UNLESS IT IS PRINTED ON RED BACKGROUND.
This Power of Attorney limits the acts of those named herein, and they have no authority to bind the Company except in the manner and to the extent herein stated.

Certificate No. 6999888

American Fire and Casualty Company
The Ohio Casualty Insurance Company
Liberty Mutual Insurance Company
West American Insurance Company

POWER OF ATTORNEY

KNOWN ALL PERSONS BY THESE PRESENTS: That American Fire & Casualty Company and The Ohio Casualty Insurance Company are corporations duly organized under the laws of the State of New Hampshire, that Liberty Mutual Insurance Company is a corporation duly organized under the laws of the State of Massachusetts, and West American Insurance Company is a corporation duly organized under the laws of the State of Indiana (herein collectively called the "Companies"), pursuant to and by authority herein set forth, does hereby name, constitute and appoint, Cheryl R. Coleman; Lisa A. Anderson; Marc J. Michalewsky; Mary J. D'Amato; Nicole T. Broderick; Sandra A. Pace; Thomas M. True

all of the city of Westfield, state of NJ each individually if there be more than one named, its true and lawful attorney-in-fact to make, execute, seal, acknowledge and deliver, for and on its behalf as surety and as its act and deed, any and all undertakings, bonds, recognizances and other surety obligations, in pursuance of these presents and shall be as binding upon the Companies as if they have been duly signed by the president and attested by the secretary of the Companies in their own proper persons.

IN WITNESS WHEREOF, this Power of Attorney has been subscribed by an authorized officer or official of the Companies and the corporate seals of the Companies have been affixed thereto this 28th day of May, 2015.

American Fire and Casualty Company
The Ohio Casualty Insurance Company
Liberty Mutual Insurance Company
West American Insurance Company

By: David M. Carey
David M. Carey, Assistant Secretary

STATE OF PENNSYLVANIA ss
COUNTY OF MONTGOMERY

On this 28th day of May, 2015, before me personally appeared David M. Carey, who acknowledged himself to be the Assistant Secretary of American Fire and Casualty Company, Liberty Mutual Insurance Company, The Ohio Casualty Insurance Company, and West American Insurance Company, and that he, as such, being authorized so to do, execute the foregoing instrument for the purposes therein contained by signing on behalf of the corporations by himself as a duly authorized officer.

IN WITNESS WHEREOF, I have hereunto subscribed my name and affixed my notarial seal at Plymouth Meeting, Pennsylvania, on the day and year first above written.

COMMONWEALTH OF PENNSYLVANIA
Notarial Seal
Teresa Pastella, Notary Public
Plymouth Twp., Montgomery County
My Commission Expires March 28, 2017
Member, Pennsylvania Association of Notaries

By: Teresa Pastella
Teresa Pastella, Notary Public

This Power of Attorney is made and executed pursuant to and by authority of the following By-laws and Authorizations of American Fire and Casualty Company, The Ohio Casualty Insurance Company, Liberty Mutual Insurance Company, and West American Insurance Company which resolutions are now in full force and effect reading as follows:

ARTICLE IV – OFFICERS – Section 12. Power of Attorney. Any officer or other official of the Corporation authorized for that purpose in writing by the Chairman or the President, and subject to such limitation as the Chairman or the President may prescribe, shall appoint such attorneys-in-fact, as may be necessary to act in behalf of the Corporation to make, execute, seal, acknowledge and deliver as surety any and all undertakings, bonds, recognizances and other surety obligations. Such attorneys-in-fact, subject to the limitations set forth in their respective powers of attorney, shall have full power to bind the Corporation by their signature and execution of any such instruments and to attach thereto the seal of the Corporation. When so executed, such instruments shall be as binding as if signed by the President and attested to by the Secretary. Any power or authority granted to any representative or attorney-in-fact under the provisions of this article may be revoked at any time by the Board, the Chairman, the President or by the officer or officers granting such power or authority.

ARTICLE XIII – Execution of Contracts – SECTION 5. Surety Bonds and Undertakings. Any officer of the Company authorized for that purpose in writing by the chairman or the president, and subject to such limitations as the chairman or the president may prescribe, shall appoint such attorneys-in-fact, as may be necessary to act in behalf of the Company to make, execute, seal, acknowledge and deliver as surety any and all undertakings, bonds, recognizances and other surety obligations. Such attorneys-in-fact subject to the limitations set forth in their respective powers of attorney, shall have full power to bind the Company by their signature and execution of any such instruments and to attach thereto the seal of the Company. When so executed such instruments shall be as binding as if signed by the president and attested by the secretary.

Certificate of Designation – The President of the Company, acting pursuant to the Bylaws of the Company, authorizes David M. Carey, Assistant Secretary to appoint such attorneys-in-fact as may be necessary to act on behalf of the Company to make, execute, seal, acknowledge and deliver as surety any and all undertakings, bonds, recognizances and other surety obligations.

Authorization – By unanimous consent of the Company's Board of Directors, the Company consents that facsimile or mechanically reproduced signature of any assistant secretary of the Company, wherever appearing upon a certified copy of any power of attorney issued by the Company in connection with surety bonds, shall be valid and binding upon the Company with the same force and effect as though manually affixed.

I, Gregory W. Davenport, the undersigned, Assistant Secretary, of American Fire and Casualty Company, The Ohio Casualty Insurance Company, Liberty Mutual Insurance Company, and West American Insurance Company do hereby certify that the original power of attorney of which the foregoing is a full, true and correct copy of the Power of Attorney executed by said Companies, is in full force and effect and has not been revoked.

IN TESTIMONY WHEREOF, I have hereunto set my hand and affixed the seals of said Companies this 9th day of July, 2015.

By: Gregory W. Davenport
Gregory W. Davenport, Assistant Secretary

Not valid for mortgage, note, loan, letter of credit, currency rate, interest rate or residual value guarantees.

To confirm the validity of this Power of Attorney call 1-610-832-8240 between 9:00 am and 4:30 pm EST on any business day

LMS_12873_122013

Liberty Mutual SURETY

LIBERTY MUTUAL INSURANCE COMPANY

FINANCIAL STATEMENT — DECEMBER 31, 2014

Assets

Cash and Bank Deposits	$744,221,142
*Bonds — U.S Government	1,718,117,704
*Other Bonds	11,205,872,087
*Stocks	9,533,437,819
Real Estate	277,742,849
Agents' Balances or Uncollected Premiums	4,150,041,316
Accrued Interest and Rents	129,261,358
Other Admitted Assets	14,896,464,393
Total Admitted Assets	**$42,655,158,668**

Liabilities

Unearned Premiums	$6,288,178,795
Reserve for Claims and Claims Expense	16,879,324,618
Funds Held Under Reinsurance Treaties	211,983,009
Reserve for Dividends to Policyholders	1,246,547
Additional Statutory Reserve	40,877,587
Reserve for Commissions, Taxes and Other Liabilities	2,664,248,124
Total	**$26,085,858,680**
Special Surplus Funds	$53,954,363
Capital Stock	10,000,000
Paid in Surplus	8,829,117,542
Unassigned Surplus	7,676,228,083
Surplus to Policyholders	**16,569,299,988**
Total Liabilities and Surplus	**$42,655,158,668**

LIBERTY MUTUAL INSURANCE COMPANY INCORPORATED 1912 MASSACHUSETTS

* Bonds are stated at amortized or investment value; Stocks at Association Market Values.
The foregoing financial information is taken from Liberty Mutual Insurance Company's financial statement filed with the state of Massachusetts Department of Insurance.

I, TIM MIKOLAJEWSKI, Assistant Secretary of Liberty Mutual Insurance Company, do hereby certify that the foregoing is a true, and correct statement of the Assets and Liabilities of said Corporation, as of December 31, 2014, to the best of my knowledge and belief.

IN WITNESS WHEREOF, I have hereunto set my hand and affixed the seal of said Corporation at Seattle, Washington, this 20th day of March, 2015.

T A Mikolajewski

Assistant Secretary

BID BOND 1
FORM OF BID BOND

KNOW ALL MEN BY THESE PRESENTS. That we,_____
_____
_____

hereinafter referred to as the "Principal", and _____
_____
_____

hereinafter referred to as the "Surety" are held and firmly bound to THE CITY OF NEW YORK, hereinafter referred to as the "CITY", or to its successors and assigns in the penal sum of _____

_____

($_____), Dollars lawful money of the United States, for the payment of which said sum of money well and truly to be made, we, and each of us, bind ourselves, our heirs, executors, administrators, successors and assigns, jointly and severally, firmly by these presents.

Whereas, the Principal is about to submit (or has submitted) to the City the accompanying proposal, hereby made a part hereof, to enter into a contract in writing for _____

_____

_____

NOW, THEREFORE, the conditions of this obligation are such that if the Principal shall not withdraw said Proposal without the consent of the City for a period of forty-five (45) days after the opening of bids and in the event of acceptance of the Principal's Proposal by the City, if the Principal shall:

(a) Within ten (10) days after notification by the City, execute in quadruplicate and deliver to the City all the executed counterparts of the Contract in the form set forth in the Contract Documents, in accordance with the proposal as accepted, and

(b) Furnish a performance bond and separate payment bond, as may be required by the City, for the faithful performance and proper fulfillment of such Contract, which bonds shall be satisfactory in all respects to the City and shall be executed by good and sufficient sureties, and

(c) In all respects perform the agreement created by the acceptance of said Proposal as provided in the Information for Bidders, bound herewith and made a part hereof, or if the City shall reject the aforesaid Proposal, then this obligation shall be null and void; otherwise to remain in full force and effect.

BID BOND 2

In the event that the Proposal of the Principal shall be accepted and the Contract be awarded to him the Surety hereunder agrees subject only to the payment by the Principal of the premium therefore, if requested by the City, to write the aforementioned performance and payment bonds in the form set forth in the Contract Documents.

It is expressly understood and agreed that the liability of the Surety for any and all claims hereunder shall in no event exceed the penal amount of this obligation as herein stated.

There shall be no liability under this bond if, in the event of the acceptance of the Principal's Proposal by the City, either a performance bond or payment bond, or both, shall not be required by the City on or before the 30th day after the date on which the City signs the Contract.

The surety, for the value received, hereby stipulates and agrees that the obligations of the Surety and its bond shall in no way be impaired or affected by any postponements of the date upon which the City will receive or open bids, or by any extensions of the time within which the City may accept the Principal's Proposal, or by any waiver by the City of any of the requirements of the Information for Bidders, and the Surety hereby waives notice of any such postponements, extensions, or waivers.

IN WITNESS WHEREOF, the Principal and the Surety have hereunto set their hands and seals and such of them as are corporations have caused their corporate seals to be hereto affixed and these presents to be signed by their proper officers the _____ day of _____, _____.

(Seal) _____(L.S.)
Principal

By: _____

(Seal) _____
Surety

By: _____

BID BOND 3

ACKNOWLEDGMENT OF PRINCIPAL, IF A CORPORATION

State of _____ County of _____ ss:
On this _____ day of _____, _____, before me personally came _____ to me known, who, being by me duly sworn, did depose and say that he resides at _____ that he is the _____ of _____ the corporation described in and which executed the foregoing instrument; that he knows the seal of said corporation; that one of the seals affixed to said instrument is such seal; that it was so affixed by order of the directors of said corporation, and that he signed his name thereto by like order.

_____
Notary Public

ACKNOWLEDGMENT OF PRINCIPAL, IF A PARTNERSHIP

State of _____ County of _____ ss:
On this _____ day of _____, _____, before me personally appeared _____ to me known and known to me to be one of the members of the firm of _____ described in and who executed the foregoing instrument, and he acknowledged to me that he executed the same as and for the act and deed of said firm.

_____
Notary Public

ACKNOWLEDGMENT OF PRINCIPAL, IF AN INDIVIDUAL

State of _____ County of _____ ss:
On this _____ day of _____, _____, before me personally appeared _____ to me known and known to me to be the person described in and who executed the foregoing instrument and acknowledged that he executed the same.

_____
Notary Public

AFFIX ACKNOWLEDGMENTS AND JUSTIFICATION OF SURETIES

(NO TEXT ON THIS PAGE)

M/WBE PROGRAM

M/WBE UTILIZATION PLAN

M/WBE Program Requirements: The requirements for the M/WBE Program are set forth on the following pages of this Bid Booklet, in the section entitled "Notice to All Prospective Contractors".

Schedule B: M/WBE Utilization Plan: Schedule B: M/WBE Utilization Plan for this Contract is set forth in this Bid Booklet on the pages following the section entitled "Notice to All Prospective Contractors". The M/WBE Utilization Plan (Part I) indicates whether Participation Goals have been established for this Contract. If Participation Goals have been established for this Contract, the bidder must submit an M/WBE Utilization Plan (Part II) with its bid.

Waiver: The bidder may seek a full or partial pre-award waiver of the Participation Goals in accordance with the "Notice to All Prospective Contractors" (See Part A, Section 10). The bidder's request for a waiver must be submitted at least seven (7) calendar days prior to the bid date. Waiver requests submitted after the deadline will not be considered. The form for requesting a waiver of the Participation Goals is set forth in the M/WBE Utilization Plan (Part III).

Rejection of the Bid: The bidder must complete Schedule B: M/WBE Utilization Plan (Part II) set forth in this Bid Booklet on the pages following the section entitled "Notice to All Prospective Contractors". A Schedule B submitted by the bidder which does not include the Vendor Certification and Required Affirmations (See Section V of Part II) will be deemed to be non-responsive, unless a full waiver of the Participation Goals is granted (Schedule B, Part III). In the event that the City determines that the bidder has submitted a Schedule B where the Vendor Certification and Required Affirmations are completed but other aspects of the Schedule B are not complete, or contain a copy or computation error that is at odds with the Vendor Certification and Required Affirmations, the bidder will be notified by the Agency and will be given four (4) calendar days from receipt of notification to cure the specified deficiencies and return a completed Schedule B to the Agency. Failure to do so will result in a determination that the Bid is non-responsive. Receipt of notification is defined as the date notice is emailed or faxed (if the bidder has provided an email address or fax number), or no later than five (5) calendar days from the date of mailing or upon delivery, if delivered.

Impact on LBE Requirements: If Participation Goals have been established for the participation of M/WBEs, the contractor is not required to comply with the Locally Based Enterprise Program ("LBE"). The LBE Program is set forth in Article 67 of the Contract.

NOTICE TO ALL PROSPECTIVE CONTRACTORS

PARTICIPATION BY MINORITY-OWNED AND WOMEN-OWNED BUSINESS ENTERPRISES IN CITY PROCUREMENT

ARTICLE I. M/WBE PROGRAM

Local Law No. 129 of 2005 added and Local Law 1 of 2013 amended Section 6-129 of the Administrative Code of the City of New York (hereinafter "Section 6-129"). Section 6-129 establishes the program for participation in City procurement ("M/WBE Program") by minority- owned business enterprises ("MBEs") and women-owned business enterprises ("WBEs"), certified in accordance with Section 1304 of the New York City Charter. As stated in Section 6-129, the intent of the program is to address the impact of discrimination on the City's procurement process, and to promote the public interest in avoiding fraud and favoritism in the procurement process, increasing competition for City business, and lowering contract costs. The contract provisions contained herein are pursuant to Section 6-129, and the rules of the Department of Small Business Services ("DSBS") promulgated thereunder.

If this Contract is subject to the M/WBE Program established by Section 6-129, the specific requirements of MBE and/or WBE participation for this Contract are set forth in Schedule B of the Contract (entitled the "M/WBE Utilization Plan"), and are detailed below. The Contractor must comply with all applicable MBE and WBE requirements for this Contract.

All provisions of Section 6-129 are hereby incorporated in the Contract by reference and all terms used herein that are not defined herein shall have the meanings given such terms in Section 6-129. Article I, Part A, below, sets forth provisions related to the participation goals for construction, standard and professional services contracts. Article I, Part B, below, sets forth miscellaneous provisions related to the M/WBE Program.

PART A

PARTICIPATION GOALS FOR CONSTRUCTION, STANDARD AND PROFESSIONAL SERVICES CONTRACTS OR TASK ORDERS

1. The **MBE and/or WBE Participation Goals** established for this Contract or Task Orders issued pursuant to this Contract, ("**Participation Goals**"), as applicable, are set forth on Schedule B, Part I to this Contract (see Page 1, line 1 Total Participation Goals) or will be set forth on Schedule B, Part I to Task Orders issued pursuant to this Contract, as applicable.

The **Participation Goals** represent a percentage of the total dollar value of the Contract or Task Order, as applicable, that may be achieved by awarding subcontracts to firms certified with New York City Department of Small Business Services as MBEs and/or WBEs, and/or by crediting the participation of prime contractors and/or qualified joint ventures as provided in Section 3 below, unless the goals have been waived or modified by Agency in accordance with Section 6-129 and Part A, Sections 10 and 11 below, respectively.

2. If **Participation Goals** have been established for this Contract or Task Orders issued pursuant to this Contract, Contractor agrees or shall agree as a material term of the Contract that Contractor shall be subject to the **Participation Goals**, unless the goals are waived or modified by Agency in accordance with Section 6-129 and Part A, Sections 10 and 11 below, respectively.

3. If **Participation Goals** have been established for this Contract or Task Order issued pursuant to this Contract, a Contractor that is an MBE and/or WBE shall be permitted to count its own participation toward fulfillment of the relevant **Participation Goal**, provided that in accordance with Section 6-129 the value of Contractor's participation shall be determined by subtracting from the total value of the Contract or Task Order, as applicable, any amounts that the Contractor pays to direct subcontractors (as defined in Section 6-129(c)(13)), and provided further that a Contractor that is certified as both an MBE and a WBE may count its own participation either toward the goal for MBEs or the goal for WBEs, but not both.

A Contractor that is a qualified joint venture (as defined in Section 6-129(c)(30)) shall be permitted to count a percentage of its own participation toward fulfillment of the relevant **Participation Goal**. In accordance with Section 6-129, the value of Contractor's participation shall be determined by subtracting from the total value of the Contract or Task Order, as applicable, any amounts that Contractor pays to direct subcontractors, and then multiplying the remainder by the percentage to be applied to total profit to determine the amount to which an MBE or WBE is entitled pursuant to the joint venture agreement, provided that where a participant in a joint venture is certified as both an MBE and a WBE, such amount shall be counted either toward the goal for MBEs or the goal for WBEs, but not both.

4. A. If **Participation Goals** have been established for this Contract, a prospective contractor shall be required to submit with its bid or proposal, as applicable, a completed Schedule B, M/WBE Utilization Plan, Part II (see Pages 2-4) indicating: (a) whether the contractor is an MBE or WBE, or qualified joint venture; (b) the percentage of work it intends to award to direct subcontractors; and (c) in cases where the contractor intends to award direct subcontracts, a description of the type and dollar value of work designated for participation by MBEs and/or WBEs, and the time frames in which such work is scheduled to begin and end. In the event that this M/WBE Utilization Plan indicates that the bidder or proposer, as applicable, does not intend to meet the **Participation Goals**, the bid or proposal, as applicable, shall be deemed non-responsive, unless Agency has granted the bidder or proposer, as applicable, a pre- award waiver of the Participation Goals in accordance with Section 6-129 and Part A, Section 10 below.

B. (i) If this Contract is for a master services agreement or other requirements type contract that will result in the issuance of Task Orders that will be individually registered ("Master Services Agreement") and is subject to M/WBE **Participation Goals**, a prospective contractor shall be required to submit with its bid or proposal, as applicable, a completed Schedule B, M/WBE Participation Requirements for Master Services Agreements That Will Require Individually Registered Task Orders, Part II (page 2) indicating the prospective contractor's certification and required affirmations to make all reasonable good faith efforts to meet participation goals established on each individual Task Order issued pursuant to this Contract, or if a partial waiver is obtained or such goals are modified by the Agency, to meet the modified **Participation Goals** by soliciting and obtaining the participation of certified MBE and/or WBE firms. In the event that the Schedule B indicates that the bidder or proposer, as applicable, does not intend to meet the **Participation Goals** that may be established on Task Orders issued pursuant to this Contract, the bid or proposal, as applicable, shall be deemed nonresponsive.

(ii) **Participation Goals** on a Master Services Agreement will be established for individual Task Orders issued after the Master Services Agreement is awarded. If **Participation Goals** have been established on a Task Order, a contractor shall be required to submit a Schedule B – M/WBE Utilization Plan For Independently Registered Task Orders That Are Issued Pursuant to Master Services Agreements, Part II (see Pages 2-4) indicating: (a) whether the contractor is an MBE or WBE, or qualified joint venture; (b) the percentage of work it intends to award to direct subcontractors; and (c) in cases where the contractor intends to award direct subcontracts, a description of the type and dollar value of work designated for participation by MBEs and/or WBEs, and the time frames in which such work is scheduled to begin and end. The contractor must engage in good faith efforts to meet the **Participation Goals** as established for the Task Order unless Agency has granted the contractor a pre-award waiver of the Participation Goals in accordance with Section 6-129 and Part A, Section 10 below.

C. THE BIDDER/PROPOSER MUST COMPLETE THE SCHEDULE B INCLUDED HEREIN (SCHEDULE B, PART II). A SCHEDULE B SUBMITTED BY THE BIDDER/PROPOSER WHICH DOES NOT INCLUDE THE VENDOR CERTIFICATION AND REQUIRED AFFIRMATIONS (SEE SECTION V OF PART II) WILL BE DEEMED TO BE NON-RESPONSIVE, UNLESS A FULL WAIVER OF THE PARTICIPATION GOALS IS GRANTED (SCHEDULE B, PART III). IN THE EVENT THAT THE CITY DETERMINES THAT THE BIDDER/PROPOSER HAS SUBMITTED A SCHEDULE B WHERE THE VENDOR CERTIFICATION AND REQUIRED AFFIRMATIONS ARE COMPLETED BUT OTHER ASPECTS OF THE SCHEDULE B ARE NOT COMPLETE, OR CONTAIN A COPY OR COMPUTATION ERROR THAT IS AT ODDS WITH THE VENDOR CERTIFICATION AND AFFIRMATIONS, THE BIDDER/PROPOSER WILL BE NOTIFIED BY THE AGENCY AND WILL BE GIVEN FOUR (4) CALENDAR DAYS FROM RECEIPT OF NOTIFICATION TO CURE THE SPECIFIED DEFICIENCIES AND RETURN A COMPLETED SCHEDULE B TO THE AGENCY. FAILURE TO DO _

SO WILL RESULT IN A DETERMINATION THAT THE BID/PROPOSAL IS NON-RESPONSIVE. RECEIPT OF NOTIFICATION IS DEFINED AS THE DATE NOTICE IS E-MAILED OR FAXED (IF THE BIDDER/PROPOSER HAS PROVIDED AN E-MAIL ADDRESS OR FAX NUMBER), OR NO LATER THAN FIVE (5) CALENDAR DAYS FROM THE DATE OF MAILING OR UPON DELIVERY, IF DELIVERED.

5. Where an **M/WBE** Utilization Plan has been submitted, the Contractor shall, within 30 days of issuance by Agency of a notice to proceed, submit a list of proposed persons or entities to which it intends to award subcontracts within the subsequent 12 months. In the case of multiyear contracts, such list shall also be submitted every year thereafter. The Agency may also require the Contractor to report periodically about the contracts awarded by its direct subcontractors to indirect subcontractors (as defined in Section 6-129(c)(22)). **PLEASE NOTE: If this Contract is a public works project subject to GML §101(5) (i.e., a contract valued at or below $3M for projects in New York City) or if the Contract is subject to a project labor agreement in accordance with Labor Law §222, and the bidder is required to identify at the time of bid submission its intended subcontractors for the Wicks trades (plumbing and gas fitting; steam heating, hot water heating, ventilating and air conditioning (HVAC); and electric wiring), the Contractor must identify all those to which it intends to award construction subcontracts for any portion of the Wicks trade work at the time of bid submission, regardless of what point in the life of the contract such subcontracts will occur. In identifying intended subcontractors in the bid submission, bidders may satisfy any Participation Goals established for this Contract by proposing one or more subcontractors that are MBEs and/or WBEs for any portion of the Wicks trade work.** In the event that the Contractor's selection of a subcontractor is disapproved, the Contractor shall have a reasonable time to propose alternate subcontractors.

6. MBE and WBE firms must be certified by DSBS in order for the Contractor to credit such firms' participation toward the attainment of the **Participation Goals**. Such certification must occur prior to the firms' commencement of work. A list of MBE and WBE firms may be obtained from the DSBS website at www.nyc.gov/buycertified, by emailing DSBS at buyer@sbs.nyc.gov, by calling (212) 513-6356, or by visiting or writing DSBS at 110 William St., New York, New York, 10038, 7th floor. Eligible firms that have not yet been certified may contact DSBS in order to seek certification by visiting www.nyc.gov/getcertified, emailing MWBE@sbs.nyc.gov, or calling the DSBS certification helpline at (212) 513-6311. A firm that is certified as both an MBE and a WBE may be counted either toward the goal for MBEs or the goal for WBEs, but not both. No credit shall be given for participation by a graduate MBE or graduate WBE, as defined in Section 6-129(c)(20).

7. Where an **M/WBE** Utilization Plan has been submitted, the Contractor shall, with each voucher for payment, and/or periodically as Agency may require, submit statements, certified under penalty of perjury, which shall include, but not be limited to,: the total amount the Contractor paid to its direct subcontractors, and, where applicable pursuant to Section 6-129(j), the total amount direct subcontractors paid to indirect subcontractors; the names, addresses and contact numbers of each MBE or WBE hired as a subcontractor by the Contractor, and, where applicable, hired by any of the Contractor's direct subcontractors; and the dates and amounts paid to each MBE or WBE. The Contractor shall also submit, along with its voucher for final payment: the total amount it paid to subcontractors, and, where applicable pursuant to Section 6-129(j), the total amount its direct subcontractors paid directly to their indirect subcontractors; and a final list, certified under penalty of perjury, which shall include the name, address and contact information of each subcontractor that is an MBE or WBE, the work performed by, and the dates and amounts paid to each.

8. If payments made to, or work performed by, MBEs or WBEs are less than the amount specified in the Contractor's **M/WBE** Utilization Plan, Agency shall take appropriate action, in accordance with Section 6-129 and Article II below, unless the Contractor has obtained a modification of its **M/WBE** Utilization Plan in accordance with Section 6-129 and Part A, Section 11 below.

9. Where an **M/WBE** Utilization Plan has been submitted, and the Contractor requests a change order the value of which exceeds the greater of 10 percent of the Contract or Task Order, as applicable, or $500,000, Agency shall review the scope of work for the Contract or Task Order, as applicable, and the scale and types of work involved in the change order, and determine whether the **Participation Goals** should be modified.

10. Pre-award waiver of the **Participation Goals**. (a) A bidder or proposer, or contractor with respect to a Task Order, may seek a pre-award full or partial waiver of the **Participation Goals** in accordance with Section 6-129, which requests that Agency change one or more **Participation Goals** on the grounds that the **Participation Goals** are unreasonable in light of the availability of certified firms to perform the services required, or by demonstrating that it has legitimate business reasons for proposing a lower level of subcontracting in its M/WBE Utilization Plan.

(b) To apply for a full or partial waiver of the **Participation Goals**, a bidder, proposer, or contractor, as applicable, must complete Part III (Page 5) of Schedule B and submit such request no later than seven (7) calendar days prior to the date and time the bids, proposals, or Task Orders are due, in writing to the Agency by email at poped@ddc.nyc.gov or via facsimile at (718) 391-1886. Bidders, proposers, or contractors, as applicable, who have submitted requests will receive an Agency response by no later than two (2) calendar days prior to the due date for bids, proposals, or Task Orders; provided, however, that if that date would fall on a weekend or holiday, an Agency response will be provided by close-of-business on the business day before such weekend or holiday date.

(c) If the Agency determines that the **Participation Goals** are unreasonable in light of the availability of certified firms to perform the services required, it shall revise the solicitation and extend the deadline for bids and proposals, or revise the Task Order, as applicable.

(d) Agency may grant a full or partial waiver of the **Participation Goals** to a bidder, proposer or contractor, as applicable, who demonstrates—before submission of the bid, proposal or Task Order, as applicable—that it has legitimate business reasons for proposing the level of subcontracting in its **M/WBE** Utilization Plan. In making its determination, Agency shall consider factors that shall include, but not be limited to, whether the bidder, proposer or contractor, as applicable, has the capacity and the bona fide intention to perform the Contract without any subcontracting, or to perform the Contract without awarding the amount of subcontracts represented by the **Participation Goals**. In making such determination, Agency may consider whether the **M/WBE** Utilization Plan is consistent with past subcontracting practices of the bidder, proposer or contractor, as applicable, whether the bidder, proposer or contractor, as applicable, has made efforts to form a joint venture with a certified firm, and whether the bidder, proposer, or contractor, as applicable, has made good faith efforts to identify other portions of the Contract that it intends to subcontract.

11. Modification of **M/WBE** Utilization Plan. (a) A Contractor may request a modification of its **M/WBE** Utilization Plan after award of this Contract. **PLEASE NOTE: If this Contract is a public works project subject to GML §101(5) (i.e., a contract valued at or below $3M for projects in New York City) or if the Contract is subject to a project labor agreement in accordance with Labor Law §222, and the bidder is required to identify at the time of bid submission its intended subcontractors for the Wicks trades (plumbing and gas fitting; steam heating, hot water heating, ventilating and air conditioning (HVAC); and electric wiring), the Contractor may request a Modification of its M/WBE Utilization Plan as part of its bid submission**. The Agency may grant a request for Modification of a Contractor's **M/WBE** Utilization Plan if it determines that the Contractor has established, with appropriate documentary and other evidence, that it made reasonable, good faith efforts to meet the **Participation Goals.** In making such determination, Agency shall consider evidence of the following efforts, as applicable, along with any other relevant factors:

(i) The Contractor advertised opportunities to participate in the Contract, where appropriate, in general circulation media, trade and professional association publications and small business media, and publications of minority and women's business organizations;
(ii) The Contractor provided notice of specific opportunities to participate in the Contract, in a timely manner, to minority and women's business organizations;
(iii) The Contractor sent written notices, by certified mail or facsimile, in a timely manner, to advise MBEs or WBEs that their interest in the Contract was solicited;
(iv) The Contractor made efforts to identify portions of the work that could be substituted for portions originally designated for participation by MBEs and/or WBEs in the M/WBE Utilization Plan, and for which the Contractor claims an inability to retain MBEs or WBEs;

(v) The Contractor held meetings with MBEs and/or WBEs prior to the date their bids or proposals were due, for the purpose of explaining in detail the scope and requirements of the work for which their bids or proposals were solicited;
(vi) The Contractor made efforts to negotiate with MBEs and/or WBEs as relevant to perform specific subcontracts, or act as suppliers or service providers;
(vii) Timely written requests for assistance made by the Contractor to Agency's M/WBE liaison officer and to DSBS;
(viii) Description of how recommendations made by DSBS and Agency were acted upon and an explanation of why action upon such recommendations did not lead to the desired level of participation of MBEs and/or WBEs.

Agency's M/WBE officer shall provide written notice to the Contractor of the determination.

(b) The Agency may modify the **Participation Goals** when the scope of the work has been changed by the Agency in a manner that affects the scale and types of work that the Contractor indicated in its **M/WBE** Utilization Plan would be awarded to subcontractors.

12. If this Contract is for an indefinite quantity of construction, standard or professional services or is a requirements type contract and the Contractor has submitted an **M/WBE** Utilization Plan and has committed to subcontract work to MBEs and/or WBEs in order to meet the **Participation Goals**, the Contractor will not be deemed in violation of the M/WBE Program requirements for this Contract with regard to any work which was intended to be subcontracted to an MBE and/or WBE to the extent that the Agency has determined that such work is not needed.

13. If **Participation Goals** have been established for this Contract or a Task Order issued pursuant to this Contract, at least once annually during the term of the Contract or Task Order, as applicable, Agency shall review the Contractor's progress toward attainment of its M/WBE Utilization Plan, including but not limited to, by reviewing the percentage of work the Contractor has actually awarded to MBE and/or WBE subcontractors and the payments the Contractor made to such subcontractors.

14. If **Participation Goals** have been established for this Contract or a Task Order issued pursuant to this Contract, Agency shall evaluate and assess the Contractor's performance in meeting those goals, and such evaluation and assessment shall become part of the Contractor's overall contract performance evaluation.

PART B: MISCELLANEOUS

1. The Contractor shall take notice that, if this solicitation requires the establishment of an **M/WBE** Utilization Plan, the resulting contract may be audited by DSBS to determine compliance with Section 6-129. See §6-129(e)(10). Furthermore, such resulting contract may also be examined by the City's Comptroller to assess compliance with the **M/WBE** Utilization Plan.

2. Pursuant to DSBS rules, construction contracts that include a requirement for an **M/WBE** Utilization Plan shall not be subject to the law governing Locally Based Enterprises set forth in Section 6-108.1 of the Administrative Code of the City of New York.

3. DSBS is available to assist contractors and potential contractors in determining the availability of MBEs and/or WBEs to participate as subcontractors, and in identifying opportunities that are appropriate for participation by MBEs and/or WBEs in contracts.

4. Prospective contractors are encouraged to enter into qualified joint venture agreements with MBEs and/or WBEs as defined by Section 6-129(c)(30).

5. By submitting a bid or proposal the Contractor hereby acknowledges its understanding of the M/WBE Program requirements set forth herein and the pertinent provisions of Section 6-129, and any rules promulgated thereunder, and if awarded this Contract, the Contractor hereby agrees to comply with the M/WBE Program requirements of this Contract and pertinent provisions of Section 6-129, and any rules promulgated thereunder, all of which shall be deemed to be material terms of this Contract. The Contractor hereby agrees to make all reasonable, good faith efforts to solicit and obtain the participation of MBEs and/or WBEs to meet the required **Participation Goals**.

ARTICLE II. ENFORCEMENT

1. If Agency determines that a bidder or proposer, as applicable, has, in relation to this procurement, violated Section 6-129 or the DSBS rules promulgated pursuant to Section 6-129, Agency may disqualify such bidder or proposer, as applicable, from competing for this Contract and the Agency may revoke such bidder's or proposer's prequalification status, if applicable.

2. Whenever Agency believes that the Contractor or a subcontractor is not in compliance with Section 6-129 or the DSBS rules promulgated pursuant to Section 6-129, or any provision of this Contract that implements Section 6-129, including, but not limited to any **M/WBE** Utilization Plan, Agency shall send a written notice to the Contractor describing the alleged noncompliance and offering the Contractor an opportunity to be heard. Agency shall then conduct an investigation to determine whether such Contractor or subcontractor is in compliance.

3. In the event that the Contractor has been found to have violated Section 6-129, the DSBS rules promulgated pursuant to Section 6-129, or any provision of this Contract that implements Section 6-129, including, but not limited to, any **M/WBE** Utilization Plan, Agency may determine that one of the following actions should be taken:

(a) entering into an agreement with the Contractor allowing the Contractor to cure the violation;
(b) revoking the Contractor's pre-qualification to bid or make proposals for future contracts;
(c) making a finding that the Contractor is in default of the Contract;
(d) terminating the Contract;
(e) declaring the Contractor to be in breach of Contract;
(f) withholding payment or reimbursement;
(g) determining not to renew the Contract;
(h) assessing actual and consequential damages;
(i) assessing liquidated damages or reducing fees, provided that liquidated damages may be based on amounts representing costs of delays in carrying out the purposes of the M/WBE Program, or in meeting the purposes of the Contract, the costs of meeting utilization goals through additional procurements, the administrative costs of investigation and enforcement, or other factors set forth in the Contract;
(j) exercising rights under the Contract to procure goods, services or construction from another contractor and charge the cost of such contract to the Contractor that has been found to be in noncompliance; or
(k) taking any other appropriate remedy.

4. If an **M/WBE** Utilization Plan has been submitted, and pursuant to this Article II, Section 3, the Contractor has been found to have failed to fulfill its **Participation Goals** contained in its **M/WBE** Utilization Plan or the **Participation Goals** as modified by Agency pursuant to Article I, Part A, Section 11, Agency may assess liquidated damages in the amount of ten percent (10%) of the difference between the dollar amount of work required to be awarded to MBE and/or WBE firms to meet the **Participation Goals** and the dollar amount the Contractor actually awarded and paid, and/or credited, to MBE and/or WBE firms. In view of the difficulty of accurately ascertaining the loss which the City will suffer by reason of Contractor's failure to meet the **Participation Goals**, the foregoing amount is hereby fixed and agreed as the liquidated damages that the City will suffer by reason of such failure, and not as a penalty. Agency may deduct and retain out of any monies which may become due under this Contract the amount of any such liquidated damages; and in case the amount which may become due under this Contract shall be less than the amount of liquidated damages suffered by the City, the Contractor shall be liable to pay the difference.

5. Whenever Agency has reason to believe that an MBE and/or WBE is not qualified for certification, or is participating in a contract in a manner that does not serve a commercially useful function (as defined in Section 6-129(c)(8)), or has violated any provision of Section 6- 129, Agency shall notify the Commissioner of DSBS who shall determine whether the certification of such business enterprise should be revoked.

6. Statements made in any instrument submitted to Agency pursuant to Section 6-129 shall be submitted under penalty of perjury and any false or misleading statement or omission shall be grounds for the application of any applicable criminal and/or civil penalties for perjury. The making of a false or fraudulent statement by an MBE and/or WBE in any instrument submitted pursuant to Section 6-129 shall, in addition, be grounds for revocation of its certification.

7. The Contractor's record in implementing its **M/WBE** Utilization Plan shall be a factor in the evaluation of its performance. Whenever Agency determines that a Contractor's compliance with an **M/WBE** Utilization Plan has been unsatisfactory, Agency shall, after consultation with the City Chief Procurement Officer, file an advice of caution form for inclusion in VENDEX as caution data.

Tax ID #: _____ APT E-PIN #: 85015B0145

SCHEDULE B – M/WBE Utilization Plan
Part I: M/WBE Participation Goals

Part I to be completed by contracting agency

Contract Overview

APT E- Pin # 85015B0145 **FMS Project ID#:** HWMM008

Project Title/ Agency PIN # SAFETY AND STREETSCAPVE IMPROVEMENTS/8502013HW0020C

Bid/Proposal Response Date

Contracting Agency Department of Design and Construction

Agency Address 30-30 Thomson Ave. **City** Long Island City **State** NY **Zip Code** 11101

Contact Person Jessica Lavides **Title** MWBE Liaison & Compliance Analyst

Telephone # (718) 391-1065 **Email** LavidesJe@ddc.nyc.gov

Project Description *(attach additional pages if necessary)*

SAFETY AND STREETSCAPE IMPROVEMENTS
EAST 86TH STREET BETWEEN PARK AVENUE AND SECOND AVENUE

SCHOOL SAFETY NECKDOWNS
MADISON AVENUE BETWEEN EAST 84TH STREET AND EAST 85TH STREET

INCLUDING WATER MAIN, STREET LIGHTING, AND TRAFFIC SIGNAL WORK

Together With All Work Incidental Thereto

BOROUGH OF MANHATTAN
CITY OF NEW YORK

M/WBE Participation Goals for Services
Enter the percentage amount for each group or for an unspecified goal. Please note that there are no goals for Asian Americans in Professional Services.

Prime Contract Industry: Construction

Group	Percentage
Unspecified*	**EXEMPT %**
or	
Black American	**UNSPECIFIED***
Hispanic American	**UNSPECIFIED***
Asian American	**UNSPECIFIED***
Women	**UNSPECIFIED***
Total Participation Goals	**EXEMPT %** **Line 1**

**Note: For this procurement, individual ethnicity and gender goals are not specified. The Total Participation Goal for construction contracts may be met by using either Black-American, Hispanic-American, Asian American, or Women certified firms or any combination of such firms.*

Tax ID #: _____ APT E- PIN #: _____

SCHEDULE B - Part II: M/WBE Participation Plan

Part II to be completed by the bidder/proposer.

Please note: For Non-M/WBE Prime Contractors who will NOT subcontract any services and will self-perform the entire contract, you must obtain a FULL waiver by completing the Waiver Application on pages 17 and 18 and timely submitting it to the contracting agency pursuant to the Notice to Prospective Contractors. Once a FULL WAIVER is granted, it must be included with your bid or proposal and you do not have to complete or submit this form with your bid or proposal.

Section I: Prime Contractor Contact Information

Tax ID # _____ **FMS Vendor ID #** _____

Business Name _____ **Contact Person** _____

Address _____

Telephone # _____ **Email** _____

Section II: M/WBE Utilization Goal Calculation: Check the applicable box and complete subsection.

PRIME CONTRACTOR ADOPTING AGENCY M/WBE PARTICIPATION GOALS

☐ **For Prime Contractors (including Qualified Joint Ventures and M/WBE firms) adopting Agency M/WBE Participation Goals.**

Calculate the total dollar value of your total bid that you agree will be awarded to M/WBE subcontractors for services and/or credited to an M/WBE prime contractor or Qualified Joint Venture.

Please review the Notice to Prospective Contractors for more information on how to obtain credit for M/WBE participation.

Total Bid/Proposal Value		Agency Total Participation Goals (Line 1, Page 13)		Calculated M/WBE Participation Amount
$	X		=	$ Line 2

PRIME CONTRACTOR OBTAINED PARTIAL WAIVER APPROVAL: ADOPTING MODIFIED M/WBE PARTICIPATION GOALS

☐ **For Prime Contractors (including Qualified Joint Ventures and M/WBE firms) adopting Modified M/WBE Participation Goals.**

Calculate the total dollar value of your total bid that you agree will be awarded to M/WBE subcontractors for services and/or credited to an M/WBE prime contractor or Qualified Joint Venture.

Please review the Notice to Prospective Contractors for more information on how to obtain credit for M/WBE participation.

Total Bid/Proposal Value		Adjusted Participation Goal (From Partial Waiver)		Calculated M/WBE Participation Amount
$	X		=	$ Line 3

Tax ID #: _____ APT E-
PIN #: _____

Section III: M/WBE Utilization Plan: How Proposer/Bidder Will Fulfill M/WBE Participation Goals. Please review the Notice to Prospective Contractors for more information on how to obtain credit for M/WBE participation. Check applicable box. The Proposer or Bidder will fulfill the M/WBE Participation Goals:

☐ As an M/WBE Prime Contractor that will self-perform and/or subcontract to other M/WBE firms a portion of the contract the value of which is at least the amount located on Lines 2 or 3 above, as applicable. The value of any work subcontracted to non-M/WBE firms will not be credited towards fulfillment of M/WBE Participation Goals. Please check all that apply to Prime Contractor:

☐ MBE ☐ WBE

☐ As a Qualified Joint Venture with an M/WBE partner, in which the value of the M/WBE partner's participation and/or the value of any work subcontracted to other M/WBE firms is at least the amount located on Lines 2 or 3 above, as applicable. The value of any work subcontracted to non M/WBE firms will not be credited towards fulfillment of M/WBE Participation Goals.

☐ As a non M/WBE Prime Contractor that will enter into subcontracts with M/WBE firms the value of which is at least the amount located on Lines 2 or 3 above, as applicable.

Section IV: General Contract Information

What is the expected percentage of the total contract dollar value that you expect to award in subcontracts for services, regardless of M/WBE status? % ____

✓ Scopes of Subcontract Work

Enter brief description of the type(s) and dollar value of subcontracts for all/any services you plan on subcontracting if awarded this contract. For each item, indicate whether the work is designated for participation by MBEs and/or WBEs and the time frame in which such work is scheduled to begin and end. Use additional sheets if necessary.

1. _____
2. _____
3. _____
4. _____
5. _____
6. _____
7. _____
8. _____
9. _____
10. _____
11. _____
12. _____
13. _____
14. _____
15. _____
16. _____
17. _____

Tax ID #: _____ APT E-
PIN #: _____

Section V: Vendor Certification and Required Affirmations

I hereby:
1) acknowledge my understanding of the M/WBE participation requirements as set forth herein and the pertinent provisions of Section 6-129 of the Administrative Code of the City of New York ("Section 6-129"), and the rules promulgated thereunder;
2) affirm that the information supplied in support of this M/WBE Utilization Plan is true and correct;
3) agree, if awarded this Contract, to comply with the M/WBE participation requirements of this Contract, the pertinent provisions of Section 6-129, and the rules promulgated thereunder, all of which shall be deemed to be material terms of this Contract;
4) agree and affirm that it is a material term of this Contract that the Vendor will award the total dollar value of the M/WBE Participation Goals to certified MBEs and/or WBEs, unless a full waiver is obtained or such goals are modified by the Agency; and
5) agree and affirm, if awarded this Contract, to make all reasonable, good faith efforts to meet the M/WBE Participation Goals, or If a partial waiver is obtained or such goals are modified by the Agency, to meet the modified Participation Goals by soliciting and obtaining the participation of certified MBE and/or WBE firms.

Signature _____ **Date** _____

Print Name _____ **Title** _____

N.A.D.

SCHEDULE B – PART III – REQUEST FOR WAIVER OF M/WBE PARTICIPATION REQUIREMENT

Contract Overview

Tax ID # _____ **FMS Vendor ID #** _____

Business Name _____

Contact Name _____ **Telephone #** _____ **Email** _____

Type of Procurement ☐ **Competitive Sealed Bids** ☐ **Other** **Bid/Response Due Date** _____

APT E-PIN # (for this procurement): _____ **Contracting Agency:** _____

M/WBE Participation Goals as described in bid/solicitation documents

_____ % **Agency M/WBE Participation Goal**

Proposed M/WBE Participation Goal *as anticipated by vendor seeking waiver*

_____ % **of the total contract value anticipated in good faith by the bidder/proposer to be subcontracted for services and/or credited to an M/WBE Prime Contractor or Qualified Joint Venture.**

Basis for Waiver Request: *Check appropriate box & explain in detail below (attach additional pages if needed)*

☐ **Vendor does not subcontract services, and has the capacity and good faith intention to perform all such work itself with its own employees.**

☐ **Vendor subcontracts *some* of this type of work but at a *lower* % than bid/solicitation describes, and has the capacity and good faith intention to do so on this contract. (Attach subcontracting plan outlining services that the vendor will self-perform and subcontract to other vendors or consultants.)**

☐ **Vendor has other legitimate business reasons for proposing the M/WBE Participation Goal above. Explain under separate cover.**

References

List 3 most recent contracts performed for NYC agencies (if any). Include information for each subcontract awarded in performance of such contracts. Add more pages if necessary.

CONTRACT NO. _____	**AGENCY** _____	**DATE COMPLETED** _____
Total Contract Amount $ _____	**Total Amount Subcontracted** $ _____	
Item of Work Subcontracted and Value of subcontract _____	Item of Work Subcontracted and Value of subcontract _____	Item of Work Subcontracted and Value of subcontract _____
CONTRACT NO. _____	**AGENCY** _____	**DATE COMPLETED** _____
Total Contract Amount $ _____	**Total Amount Subcontracted** $ _____	
Item of Work Subcontracted and Value of subcontract _____	Item of Work Subcontracted and Value of subcontract _____	Item of Work Subcontracted and Value of subcontract _____
CONTRACT NO.	**AGENCY**	**DATE COMPLETED**
Total Contract Amount $	**Total Amount Subcontracted** $	
Item of Work Subcontracted and Value of subcontract _____	Item of Work Subcontracted and Value of subcontract _____	Item of Work Subcontracted and Value of subcontract _____

List 3 most recent contracts performed for other entities. Include information for each subcontract awarded in performance of such contracts. Add more pages if necessary.

(Complete ONLY if vendor has performed fewer than 3 New York City contracts.)

TYPE OF Contract _____ **ENTITY** _____ **DATE COMPLETED** _____

Manager at entity that hired vendor (Name/Phone No./Email) _____

Total Contract Amount $ _____ **Total Amount Subcontracted** $ _____

Type of Work Subcontracted _____

TYPE OF Contract _____ **AGENCY/ENTITY** _____ **DATE COMPLETED** _____

Manager at agency/entity that hired vendor (Name/Phone No./Email) _____

Total Contract Amount $ _____ **Total Amount Subcontracted** $ _____

Item of Work Subcontracted and Value of subcontract _____ Item of Work Subcontracted and Value of subcontract _____ Item of Work Subcontracted and Value of subcontract _____

TYPE OF Contract _____ **AGENCY/ENTITY** _____ **DATE COMPLETED** _____

Manager at entity that hired vendor (Name/Phone No./Email) _____

Total Contract Amount $ _____ **Total Amount Subcontracted** $ _____

Item of Work Subcontracted and Value of subcontract _____ Item of Work Subcontracted and Value of subcontract _____ Item of Work Subcontracted and Value of subcontract _____

VENDOR CERTIFICATION: *I hereby affirm that the information supplied in support of this waiver request is true and correct, and that this request is made in good faith.*

Signature: _____ **Date:** _____

Print Name: _____ **Title:** _____

Shaded area below is for agency completion only

AGENCY CHIEF CONTRACTING OFFICER APPROVAL

Signature: _____ **Date:** _____

CITY CHIEF PROCUREMENT OFFICER APPROVAL

Signature: _____ **Date:** _____

Waiver Determination

Full Waiver Approved ☐

Waiver Denied ☐

Partial Waiver Approved ☐

Revised Participation Goal _____

APPRENTICESHIP PROGRAM QUESTIONNAIRE

PROJECT ID: HWMM008

The bidder must submit a completed and signed Apprenticeship Program Questionnaire.

Name of Bidder: Triumph Const Corp

1. Does the bidder have an Apprenticeship Program appropriate for the type and scope of work to be performed? [Note: Participation may be by either direct sponsorship or through collective bargaining agreement(s).]

   ✓ YES _____ NO

2. Has the bidder's Apprenticeship Program been registered with, and approved by, the New York State Commissioner of Labor?

   ✓ YES _____ NO

3. Has the bidder's Apprenticeship Program had three years of successful experience in providing career opportunities?

   ✓ YES _____ NO

If the answer to Question #3 is "Yes", the bidder shall, in the space below, provide information regarding the experience the Apprenticeship Program has had in providing career opportunities. The bidder may attach additional pages if necessary.

Apprenticeship programs have been effective over the past few years. Helps workers establish themselves & grow positively.

Bidder: Triumph Const Corp

By: _____ Title: President
(Signature of Partner or Corporate Officer)

Date: 7/9/15

Building, Concrete, Excavating & Common Laborers Union Local No. 731, of Greater New York

JOSEPH D'AMATO, Business Manager
DOMINIC J. VALDNER, Secretary-Treasurer

Affiliated with the Laborers' International Union of North America, AFL-CIO

Office: 3411 35th Avenue, Astoria, NY 11106
Telephone No. (718) 706-0720
Fax No. (718) 706-9337

Effective Date: July 1, 2014

TO: ALL EMPLOYERS WITHIN THE JURISDICTION OF EXCAVATORS UNION LOCAL 731

RE: **COLLECTIVE BARGAINING AGREEMENT**
July 1, 2012 through June 30, 2016

Please take notice that Excavators Union Local 731 ("Local 731") and the General Contractors Association of New York, Inc. have agreed upon the following schedule of wages and fringe benefits for the period of July 1, 2012 through June 30, 2016. Although our Collective Bargaining Agreement covers the period of July 1, 2012 through June 30, 2016, the allocation of increases for years commencing July 1, 2012 and thereafter will be determined in advance, by Local 731. The total package increase is 12 ½ %. The breakdown will be 2¾ % for year 1, 3 % for year 2, 3¼ % for year 3. and 3½ % for year 4. The allocation of the package increase for the contract year July 1, 2012 through June 30, 2016 was ratified at the Membership Meeting of Excavators Union Local 731

WAGES:

	PER 40 HOUR WEEK
LABORERS	
7/1/12 to 6/30/13 Increase of $.50 hr. to $ 38.70	$1,548.00
7/1/13 to 6/30/14 Increase of $.55 hr. to $ 39.25	$1,570.00
7/1/14 to 6/30/15 Increase of $.60 hr. to $ 39.85	$1,594.00
7/1/15 to 6/30/16 Increase of $ TBD hr. to $ TBD	$ TBD
LABOR FOREMAN (hired on a weekly basis)	
7/1/12 to 6/30/13 Increase of $.50 hr. to $ 41.20	$1,648.00
7/1/13 to 6/30/14 Increase of $.55 hr. to $ 41.75	$1,670.00
7/1/14 to 6/30/15 Increase of $.60 hr. to $ 42.35	$1,694.00
7/1/15 to 6/30/16 Increase of $ TBD hr. to $ TBD	$ TBD
UTILITY LABORERS	
7/1/12 to 6/30/13 Increase of $.50 hr. to $ 38.55	$1,542.00
7/1/13 to 6/30/14 Increase of $.55 hr. to $ 39.10	$1,564.00
7/1/14 to 6/30/15 Increase of $.60 hr. to $ 39.70	$1,588.00
7/1/15 to 6/30/16 Increase of $ TBD hr. to $ TBD	$ TBD

UTILITY FOREMAN (hired on a weekly basis) $1,642.00
7/1/12 to 6/30/13 Increase of $.50 hr. to $ 41.05 ..... $1,664.00
7/1/13 to 6/30/14 Increase of $.55 hr. to $ 41.60 ..... $1,688.00
7/1/14 to 6/30/15 Increase of $.60 hr. to $ 42.20..... $ TBD
7/1/15 to 6/30/16 Increase of $ TBD hr. to $ TBD.... .....

FRINGE BENEFITS: To be paid on a "per hour" basis for all laborers and labor foremen.

Date	Welfare Fund	Pension Fund	Annuity Fund	731 Training
7/1/12 to 6/30/13	$ 13.50	$ 13.00	$ 4.70	$ .45
7/1/13 to 6/30/14	$ 14.20	$ 13.50	$ 5.00	$ .45
7/1/14 to 6/30/15	$ 15.23	$ 13.50	$ 5.60	$ .45
7/1/15 to 6/30/16	$ TBD	$ TBD	$ TBD	$ TBD

= 34.78/hr.

ADDITIONAL EMPLOYER CONTRIBUTIONS:

LECET (Laborers/Employers Cooperation Education Trust)..... $ .10 per hour

DEDUCTIONS FROM WAGES:

Supplemental Membership Dues	7/1/12 thru 6/30/13	$1.20 per hour
Supplemental Membership Dues	7/1/13 thru 6/30/14	$1.20 per hour
Supplemental Membership Dues	7/1/14 thru 6/30/15	$1.20 per hour
Supplemental Membership Dues	7/1/15 thru 6/30/16	$1.20 per hour
NYS Political Action Committee	(Voluntary Deduction)	$ .10 per hour

LABOR DAY AND THANKSGIVING ARE PAID HOLIDAYS.

The preceding schedules are effective as of July 1, 2014

Sincerely yours,

Joseph D'Amato
Business Manager

JD/jt

EXCAVATORS UNION LOCAL 731 WELFARE FUND
3411 35th AVENUE
ASTORIA, N.Y. 11106
718-472-0820

MEMORANDUM

To: Contributing Employers

From: Fund Administrator
Excavators Union Local 731 Welfare Fund

Date: February 2, 2015

Re: Affordable Care Act's Requirements Applicable to Large Contributing Employers

The Affordable Care Act (ACA) provides that a contributing employer to a multiemployer plan will be treated as having met its obligations to offer health coverage under IRC Section 4980H with respect to a full-time employee if the employer is required by a collective bargaining agreement (or appropriate related participation agreement) to contribute on behalf of that employee to a multiemployer plan that provides coverage to individuals who satisfy the plan's eligibility conditions, meeting the affordability and minimum value requirements and that offers coverage to those individuals' dependents.

This memorandum provides information that will assist contributing employers to understand the Fund's rules under the ACA and IRC Section 4980H. In addition, this will assist employers to complete reporting required to be submitted by large (50 or more full-time employees or equivalents) employers under Internal Revenue Code Section 6056. Specifically, the following information will assist a large contributing employer as it completes Form 1095-C for each of its full-time employees for whom the employer is required to contribute to the Fund.

1. MINIMUM ESSENTIAL COVERAGE

The Fund provides minimum essential coverage, as defined in the ACA.

2. MINIMUM VALUE

The health benefits offered by the Fund meet the 60 percent minimum value standard.

3. DEPENDENT COVERAGE

The Fund offers coverage to eligible participants and to the following dependents:

- Lawful spouse; and
- Child(ren) until the end of the month in which the child(ren) attain age 26; and

Building, Concrete, Excavating & Common Laborers Union Local No. 731, of Greater New York

JOSEPH D'AMATO, Business Manager
DOMINIC J. VALDNER, Secretary-Treasurer

Affiliated with the Laborers' International Union of North America, AFL-CIO

Office: 3411 35th Avenue, Astoria, NY 11106
Telephone No..... (718) 706-0720
Fax No.....(718) 706-9337

Effective Date: July 1, 2014

TO: ALL EMPLOYERS WITHIN THE JURISDICTION
OF EXCAVATORS UNION LOCAL 731

RE: **COLLECTIVE BARGAINING AGREEMENT**
July 1, 2012 through June 30, 2016

Please take notice that Excavators Union Local 731 ("Local 731") and the General Contractors Association of New York, Inc. have agreed upon the following schedule of wages and fringe benefits for the period of July 1, 2012 through June 30, 2016. Although our Collective Bargaining Agreement covers the period of July 1, 2012 through June 30, 2016, the allocation of increases for years commencing July 1, 2012 and thereafter will be determined in advance, by Local 731. The total package increase is 12 ½ %. The breakdown will be 2¾ % for year 1, 3 % for year 2, 3¼ % for year 3, and 3½ % for year 4. The allocation of the package increase for the contract year July 1, 2012 through June 30, 2016 was ratified at the Membership Meeting of Excavators Union Local 731

WAGES:

	PER 40 HOUR WEEK
LABORERS	
7/1/12 to 6/30/13 Increase of $.50 hr. to $ 38.70	$1,548.00
7/1/13 to 6/30/14 Increase of $.55 hr. to $ 39.25	$1,570.00
7/1/14 to 6/30/15 Increase of $.60 hr. to $ 39.85	$1,594.00
7/1/15 to 6/30/16 Increase of $ TBD hr. to $ TBD	$ TBD
LABOR FOREMAN (hired on a weekly basis)	
7/1/12 to 6/30/13 Increase of $.50 hr. to $ 41.20	$1,648.00
7/1/13 to 6/30/14 Increase of $.55 hr. to $ 41.75	$1,670.00
7/1/14 to 6/30/15 Increase of $.60 hr. to $ 42.35	$1,694.00
7/1/15 to 6/30/16 Increase of $ TBD hr. to $ TBD	$ TBD
UTILITY LABORERS	
7/1/12 to 6/30/13 Increase of $.50 hr. to $ 38.55	$1,542.00
7/1/13 to 6/30/14 Increase of $.55 hr. to $ 39.10	$1,564.00
7/1/14 to 6/30/15 Increase of $.60 hr. to $ 39.70	$1,588.00
7/1/15 to 6/30/16 Increase of $ TBD hr. to $ TBD	$ TBD

LIUNA
LOCAL 731 Training Fund

3411 35th Avenue
Astoria, NY 11106

Tel: 718-752-9860 • Fax: 718-752-9880

APPRENTICESHIP PROGRAM

To Whom It May Concern:

Apprentice Rates are as follows: Effective July 1, 2014

1-1000 hrs	= 50% of a Journeyman's rate	$19.93 hr.
1000-2000	= 60% of a Journeyman's rate	$23.91 hr.
2000-3000	= 75% of a Journeyman's rate	$29.89 hr.
3000-4000	= 90% of a Journeyman's rate	$35.87 hr.
4000+	= Full Journeyman's rate	$39.85 hr.

Benefits are paid the same as a Journeyman.

Rates are in effect until June 30, 2015.

EXCAVATORS UNION LOCAL 731 PENSION FUND
REPORT OF SUMMARY PLAN INFORMATION
2013 Plan Year

In accordance with Section 104(d) of the Employee Retirement Income Security Act (ERISA), the Trustees of the Excavators Union Local 731 Pension Fund are providing the following Report of Summary Plan Information to the Union that represents Plan participants and Employers obligated to contribute to the Plan.

Except as otherwise specified, all information in this Report pertains to the Plan Year beginning January 1, 2013 and ending December 31, 2013 (the "2013 Plan Year").

1. Contribution Schedule and Benefit Formula Information

As set forth more fully in the Summary Plan Description, the Pension Fund provides a monthly benefit at Normal Retirement Age, which is at least age 62 or upon later attainment of vested status. The monthly amount is $15.20 multiplied by the number of years of Past Service Credit plus $6.00 for each unit of future service credit earned through December 31, 1993 plus $20.00 for each unit of future service earned thereafter.

The contribution rates in effect during the 2013 plan year were $13.00 per hour for the period January 1, 2013 through June 30, 2013 and $13.50 for the period July 1, 2013 through December 31, 2013.

2. Number of Contributing Employers

For the 2013 plan year, 426 employers were obligated to contribute to the Pension Fund.

3. Employers Contributing More than 5%

During the 2013 plan year, the employer listed below contributed more than 5% of total contributions to the Pension Fund:

SKANSKA USA Civil Northeast

THE HALLEN CONSTRUCTION CO. INC

4. Participants for Whom No Contributions Were Made

As required by the law, the chart below sets out, for the 2013, 2012, and 2011 plan years, the number of participants with respect to whom no employer contributions were made because their employer had withdrawn from the Pension Fund as of the beginning of the year.

APPRENTICESHIP PROGRAM REQUIREMENTS

Bidders are advised that the Apprenticeship Program Requirements set forth below apply to each contract for which a check mark is indicated before the word "Yes". Compliance with these requirements will be determined solely by the City.

__√__ YES _____ NO

(1) Apprenticeship Program Requirements

Notice to Bidders: Please be advised that, pursuant to the authority granted to the City under Labor Law Section 816-b, the Department of Design and Construction hereby requires that the contractor awarded a contract as a result of this Invitation for Bids, and any of its subcontractors with subcontracts worth one million dollars or over, have, prior to entering into such contract or subcontract, apprenticeship agreements appropriate for the type and scope of work to be performed that have been registered with, and approved by, the New York State Commissioner of Labor. In addition, the contractor and its subcontractors will be required to show that such apprenticeship programs have three years of current, successful experience in providing career opportunities.

The failure to prove, upon request, that these requirements have been met shall result in the contract not being awarded to the contractor or the subcontract not being approved.

Please be further advised that, pursuant to Labor Law Section 220, the allowable ratio of apprentices to journeypersons in any craft classification shall not be greater than the ratio permitted to the contractor as to its workforce on any job under the registered apprenticeship program.

(2) Apprenticeship Program Questionnaire

The bidder must submit a completed and signed Apprenticeship Program Questionnaire. The Questionnaire is set forth on the following page of the Bid Booklet.

APPRENTICESHIP PROGRAM QUESTIONNAIRE

PROJECT ID: HWMM008

The bidder must submit a completed and signed Apprenticeship Program Questionnaire.

Name of Bidder: _____

1. Does the bidder have an Apprenticeship Program appropriate for the type and scope of work to be performed? [Note: Participation may be by either direct sponsorship or through collective bargaining agreement(s).]

   _____ YES _____ NO

2. Has the bidder's Apprenticeship Program been registered with, and approved by, the New York State Commissioner of Labor?

   _____ YES _____ NO

3. Has the bidder's Apprenticeship Program had three years of successful experience in providing career opportunities?

   _____ YES _____ NO

If the answer to Question #3 is "Yes", the bidder shall, in the space below, provide information regarding the experience the Apprenticeship Program has had in providing career opportunities. The bidder may attach additional pages if necessary.

_____

_____

_____

_____

_____

_____

_____

_____

_____

_____

_____

Bidder: _____

By: _____ Title: _____

(Signature of Partner or Corporate Officer)

Date: _____

Project ID. _____

SAFETY QUESTIONNAIRE

The bidder must include, with its bid, all information requested on this Safety Questionnaire. Failure to provide a completed and signed Safety Questionnaire at the time of bid opening may result in disqualification of the bid as non-responsive.

1. Bidder Information:

Company Name: Triumph Const Corp

DDC Project Number: HWMM008

Company Size: _____ Ten (10) employees or less

✓ Greater than ten (10) employees

Company has previously worked for DDC ✓ YES _____ NO

2. Type(s) of Construction Work

TYPE OF WORK	LAST 3 YEARS	THIS PROJECT
General Building Construction		
Residential Building Construction		
Nonresidential Building Construction		
Heavy Construction, except building	✓	✓
Highway and Street Construction	✓	
Heavy Construction, except highways	✓	✓
Plumbing, Heating, HVAC		
Painting and Paper Hanging		
Electrical Work		
Masonry, Stonework and Plastering		
Carpentry and Floor Work		
Roofing, Siding, and Sheet Metal		
Concrete Work	✓	✓
Specialty Trade Contracting	✓	✓
Asbestos Abatement		
Other (specify)		
_____		

3. Experience Modification Rate:

The Experience Modification Rate (EMR) is a rating generated by the National Council of Compensation Insurance (NCCI). This rating is used to determine the contractor's premium for worker's compensation insurance. The contractor may obtain its EMR by contacting its insurance broker or the NCCI. If the contractor cannot obtain its EMR, it must submit a written explanation as to why.

Project ID. _____

The Contractor must indicate its Intrastate and Interstate EMR for the past three years. [Note: For contractors with less than three years of experience, the EMR will be considered to be 1.00].

YEAR	INTRASTATE RATE	INTERSTATE RATE
2014	.77	.77
2013	.74	.74
2012	.92	.92

If the Intrastate and/or Interstate EMR for any of the past three years is greater than 1.00, the contractor must attach, to this questionnaire, a written explanation for the rating and identify what corrective action was taken to correct the situation resulting in that rating.

4. OSHA Information:

___ YES ___✓___ NO Contractor has received a willful violation issued by OSHA or New York City Department of Buildings (NYCDOB) within the last three years.

___ YES ___✓___ NO Contractor has had an incident requiring OSHA notification within 8 hours (all work-related fatalities) or an incident requiring OSHA notification within 24 hours (all work-related impatient hospitalizations, all amputations and all losses of an eye).

The Occupational Safety and Health Act (OSHA) of 1970 requires employers with ten or more employees, on a yearly basis to complete and maintain on file the form entitled "Log of Work-related Injuries and Illnesses". This form is commonly referred to as the OSHA 300 Log (OSHA 200 Log for 2001 and earlier).

The OSHA 300 Log must be submitted for the last three years for contractors with more than ten employees.

The Contractor must indicate the total number of hours worked by its employees, as reflected in payroll records for the past three years.

The contractor must submit the Incident Rate for Lost Time Injuries (the Incident Rate) for the past three years. The Incident Rate is calculated in accordance with the formula set forth below. For each given year, the total number of incidents is the total number of non-fatal injuries and illnesses reported on the OSHA 300 Log. The 200,000 hours represents the equivalent of 100 employees working forty hours a week, fifty weeks per year.

$$\text{Incident Rate} = \frac{\text{Total Number of Incidents X 200,000}}{\text{Total Number of Hours Worked by Employees}}$$

YEAR	TOTAL NUMBERS OF HOURS WORKED BY EMPLOYEES	INCIDENT RATE
2012	347,179	1.15
2013	305,832	1.59
2014	423,724	.94

TRIUMPH CONSTRUCTION

1354 Seneca Avenue
Bronx, NY 10474

Phone: 718 861-6060
Fax: 718 861-6660

July 8, 2015

City of New York
Department of Design & Construction
30-30 Thompson Avenue
Long Island City, NY 11101

Re: Written Explanation of Mode Reduction for Triumph Construction Corp.

To Whom It May Concern:

In 2010, Tom Miller from Risk and Safety Advisors was hired as the safety consultant for Triumph Construction to evaluate our safety and health program as well as to monitor safety compliance in the field. He re-wrote the safety program, conducted additional training and prepared on site safety audits for Triumph. In 2011, he was hired as a full time employee at Triumph and began spearheading a comprehensive daily loss control program.

As a result of the aforementioned safety efforts, Triumph's EMR was reduced to .92 for 2012. Furthermore, in 2013 Triumph Construction Corps EMR fell to .74 and in 2014 the rating was 77. Finally, now in 2015 we have implementation of our safe work practices this year and a further reduction in the EMR to .69 in 2015.

Sincerely,

Dominick Cuzzi
Project Manager

Project ID. _____

If the contractor's Incident Rate for any of the past three years is one point higher than the Incident Rate for the type of construction it performs (listed below), the contractor must attach, to this questionnaire, a written explanation for the relatively high rate.

General Building Construction	8.5
Residential Building Construction	7.0
Nonresidential Building Construction	10.2
Heavy Construction, except building	8.7
Highway and Street Construction	9.7
Heavy Construction, except highways	8.3
Plumbing, Heating, HVAC	11.3
Painting and Paper Hanging	6.9
Electrical Work	9.5
Masonry, Stonework and Plastering	10.5
Carpentry and Floor Work	12.2
Roofing, Siding, and Sheet Metal	10.3
Concrete Work	8.6
Specialty Trade Contracting	8.6

5. Safety Performance on Previous DDC Project(s)

___ YES ✓ NO Contractor previously audited by the DDC Office of Site Safety.

DDC Project Number(s): _____, _____, _____

___ YES ✓ NO Accident on previous DDC Project(s).

DDC Project Number(s): _____, _____, _____

___ YES ✓ NO Fatality or Life-altering Injury on DDC Project(s) within the last three years. [Examples of a life-altering injury include loss of limb, loss of a sense (e.g., sight, hearing), or loss of neurological function].

DDC Project Number(s): _____, _____, _____

Date: 7/9/15 By: _____
(Signature of Owner, Partner, Corporate Officer)

Title: President

OSHA's Form 300A (Rev. 01/2004)

Summary of Work-Related Injuries and Illnesses

Year 2014

U.S. Department of Labor
Occupational Safety and Health Administration
Form approved OMB no. 1218-0176

All establishments covered by Part 1904 must complete this Summary page, even if no injuries or illnesses occurred during the year. Remember to review the Log to verify that the entries are complete.

Using the Log, count the individual entries you made for each category. Then write the totals below, making sure you've added the entries from every page of the log. If you had no cases write "0."

Employees, former employees, and their representatives have the right to review the OSHA Form 300 in its entirety. They also have limited access to the OSHA Form 301 or its equivalent. See 29 CFR 1904.35, in OSHA's Recordkeeping rule, for further details on the access provisions for these forms.

Number of Cases

Total number of deaths	Total number of cases with days away from work	Total number of cases with job transfer or restriction	Total number of other recordable cases
0	2	0	0
(G)	(H)	(I)	(J)

Number of Days

Total number of days away from work	Total number of days of job transfer or restriction
90	0
(K)	(L)

Injury and Illness Types

Total number of...	(M)		(M)
(1) Injury	2	(4) Poisoning	0
(2) Skin Disorder	0	(5) Hearing Loss	0
(3) Respiratory Condition	0	(6) All Other Illnesses	0

Post this Summary page from February 1 to April 30 of the year following the year covered by the form

Public reporting burden for this collection of information is estimated to average 50 minutes per response, including time to review the instruction, search and gather the data needed, and complete and review the collection of information. Persons are not required to respond to the collection of information unless it displays a currently valid OMB control number. If you have any comments about these estimates or any aspects of this data collection, contact: US Department of Labor, OSHA Office of Statistics, Room N-3644, 200 Constitution Ave, NW, Washington, DC 20210. Do not send the completed forms to this office.

Establishment information

Your establishment name: Triumph Construction Corp.

Street: 1354 Seneca Avenue

City: Bronx State: New York Zip: 10474

Industry description (e.g., Manufacture of motor truck trailers)
Construction

Standard Industrial Classification (SIC), if known (e.g., SIC 3715)
1 6 2 3

OR North American Industrial Classification (NAICS), if known (e.g., 336212)

Employment information

Annual average number of employees: 170

Total hours worked by all employees last year: 423,724

Sign here: Tom Miller

Knowingly falsifying this document may result in a fine.

I certify that I have examined this document and that to the best of my knowledge the entries are true, accurate, and complete.

Company executive

President
Title

718-861-6060
Phone

1-12-15
Date

OSHA's Form 300A (Rev. 01/2004)

Summary of Work-Related Injuries and Illnesses

Year 2013

U.S. Department of Labor
Occupational Safety and Health Administration
Form approved OMB no. 1218-0176

All establishments covered by Part 1904 must complete this Summary page, even if no injuries or illnesses occurred during the year. Remember to review the Log to verify that the entries are complete

Using the Log, count the individual entries you made for each category. Then write the totals below, making sure you've added the entries from every page of the log. If you had no cases write "0."

Employees, former employees, and their representatives have the right to review the OSHA Form 300 in its entirety. They also have limited access to the OSHA Form 301 or its equivalent. See 29 CFR 1904.35, in OSHA's Recordkeeping rule, for further details on the access provisions for these forms.

Number of Cases

Total number of deaths	Total number of cases with days away from work	Total number of cases with job transfer or restriction	Total number of other recordable cases
0	3	0	0
(G)	(H)	(I)	(J)

Number of Days

Total number of days away from work	Total number of days of job transfer or restriction
22	0
(K)	(L)

Injury and Illness Types

Total number of...	(M)		(M)
(1) Injury	3	(4) Poisoning	0
(2) Skin Disorder	0	(5) Hearing Loss	0
(3) Respiratory Condition	0	(6) All Other Illnesses	0

Post this Summary page from February 1 to April 30 of the year following the year covered by the form

Public reporting burden for this collection of information is estimated to average 50 minutes per response, including time to review the instruction, search and gather the data needed, and complete and review the collection of information. Persons are not required to respond to the collection of information unless it displays a currently valid OMB control number. If you have any comments about these estimates or any aspects of this data collection, contact: US Department of Labor, OSHA Office of Statistics, Room N-3644, 200 Constitution Ave, NW, Washington, DC 20210. Do not send the completed forms to this office.

Establishment information

Your establishment name: Triumph Construction Corp.

Street: 1354 Seneca Avenue

City: Bronx State: New York Zip: 10474

Industry description (e.g., Manufacture of motor truck trailers): Construction

Standard Industrial Classification (SIC), if known (e.g., SIC 3715): 1623

OR North American Industrial Classification (NAICS), if known (e.g., 336212):

Employment information

Annual average number of employees: 150

Total hours worked by all employees last year: 377,299

Sign here: Thomas J Miller

Knowingly falsifying this document may result in a fine.

I certify that I have examined this document and that to the best of my knowledge the entries are true, accurate, and complete.

Company executive

Title: President

Phone: 718-862-6060

Date: 1-29-14

OSHA's Form 300A (Rev. 01/2004)

Summary of Work-Related Injuries and Illnesses

Year 2012

U.S. Department of Labor
Occupational Safety and Health Administration

Form approved OMB no. 1218-0176

All establishments covered by Part 1904 must complete this Summary page, even if no injuries or illnesses occurred during the year. Remember to review the Log to verify that the entries are complete.

Using the Log, count the individual entries you made for each category. Then write the totals below, making sure you've added the entries from every page of the log. If you had no cases write "0."

Employees, former employees, and their representatives have the right to review the OSHA Form 300 in its entirety. They also have limited access to the OSHA Form 301 or its equivalent. See 29 CFR 1904.35, in OSHA's Recordkeeping rule, for further details on the access provisions for these forms.

Number of Cases

Total number of deaths	Total number of cases with days away from work	Total number of cases with job transfer or restriction	Total number of other recordable cases
0	2	0	0
(G)	(H)	(I)	(J)

Number of Days

Total number of days away from work	Total number of days of job transfer or restriction
2	0
(K)	(L)

Injury and Illness Types

Total number of...	(M)		
(1) Injury	2	(4) Poisoning	0
(2) Skin Disorder	0	(5) Hearing Loss	0
(3) Respiratory Condition	0	(6) All Other Illnesses	0

Post this Summary page from February 1 to April 30 of the year following the year covered by the form

Public reporting burden for this collection of information is estimated to average 50 minutes per response, including time to review the instruction, search and gather the data needed, and complete and review the collection of information. Persons are not required to respond to the collection of information unless it displays a currently valid OMB control number. If you have any comments about these estimates or any aspects of this data collection, contact: US Department of Labor, OSHA Office of Statistics, Room N-3644, 200 Constitution Ave. NW, Washington, DC 20210. Do not send the completed forms to this office.

Establishment information

Your establishment name: Triumph Construction Corp.

Street: 1354 Seneca Avenue

City: Bronx State: New York Zip: 10474

Industry description (e.g., Manufacture of motor truck trailers): Construction

Standard Industrial Classification (SIC), if known (e.g., SIC 3715): 1623

OR North American Industrial Classification (NAICS), if known (e.g., 336212):

Employment information

Annual average number of employees: 175

Total hours worked by all employees last year: 347,179

Sign here: Tom Miller

Knowingly falsifying this document may result in a fine.

I certify that I have examined this document and that to the best of my knowledge the entries are true, accurate, and complete.

Company executive

President
Title

718-861-6060
Phone

1-31-13
Date

Project ID. _____

SAFETY QUESTIONNAIRE

The bidder must include, with its bid, all information requested on this Safety Questionnaire. Failure to provide a completed and signed Safety Questionnaire at the time of bid opening may result in disqualification of the bid as non-responsive.

1. Bidder Information:

Company Name: _____

DDC Project Number: _____

Company Size: _____ Ten (10) employees or less

_____ Greater than ten (10) employees

Company has previously worked for DDC _____ YES _____ NO

2. Type(s) of Construction Work

TYPE OF WORK	LAST 3 YEARS	THIS PROJECT
General Building Construction		
Residential Building Construction		
Nonresidential Building Construction		
Heavy Construction, except building		
Highway and Street Construction		
Heavy Construction, except highways		
Plumbing, Heating, HVAC		
Painting and Paper Hanging		
Electrical Work		
Masonry, Stonework and Plastering		
Carpentry and Floor Work		
Roofing, Siding, and Sheet Metal		
Concrete Work		
Specialty Trade Contracting		
Asbestos Abatement		
Other (specify)		
_____		

3. Experience Modification Rate:

The Experience Modification Rate (EMR) is a rating generated by the National Council of Compensation Insurance (NCCI). This rating is used to determine the contractor's premium for worker's compensation insurance. The contractor may obtain its EMR by contacting its insurance broker or the NCCI. If the contractor cannot obtain its EMR, it must submit a written explanation as to why.

Project ID. _____

The Contractor must indicate its Intrastate and Interstate EMR for the past three years. [Note: For contractors with less than three years of experience, the EMR will be considered to be 1.00].

YEAR	INTRASTATE RATE	INTERSTATE RATE
_____	_____	_____
_____	_____	_____
_____	_____	_____

If the Intrastate and/or Interstate EMR for any of the past three years is greater than 1.00, the contractor must attach, to this questionnaire, a written explanation for the rating and identify what corrective action was taken to correct the situation resulting in that rating.

4. OSHA Information:

____ YES ____ NO Contractor has received a willful violation issued by OSHA or New York City Department of Buildings (NYCDOB) within the last three years.

____ YES ____ NO Contractor has had an incident requiring OSHA notification within 8 hours (all work-related fatalities) or an incident requiring OSHA notification within 24 hours (all work-related impatient hospitalizations, all amputations and all losses of an eye).

The Occupational Safety and Health Act (OSHA) of 1970 requires employers with ten or more employees, on a yearly basis to complete and maintain on file the form entitled "Log of Work-related Injuries and Illnesses". This form is commonly referred to as the OSHA 300 Log (OSHA 200 Log for 2001 and earlier).

The OSHA 300 Log must be submitted for the last three years for contractors with more than ten employees.

The Contractor must indicate the total number of hours worked by its employees, as reflected in payroll records for the past three years.

The contractor must submit the Incident Rate for Lost Time Injuries (the Incident Rate) for the past three years. The Incident Rate is calculated in accordance with the formula set forth below. For each given year, the total number of incidents is the total number of non-fatal injuries and illnesses reported on the OSHA 300 Log. The 200,000 hours represents the equivalent of 100 employees working forty hours a week, fifty weeks per year.

$$\text{Incident Rate} = \frac{\text{Total Number of Incidents X 200,000}}{\text{Total Number of Hours Worked by Employees}}$$

YEAR	TOTAL NUMBERS OF HOURS WORKED BY EMPLOYEES	INCIDENT RATE
_____	_____	_____
_____	_____	_____
_____	_____	_____

If the contractor's Incident Rate for any of the past three years is one point higher than the Incident Rate for the type of construction it performs (listed below), the contractor must attach, to this questionnaire, a written explanation for the relatively high rate.

General Building Construction	8.5
Residential Building Construction	7.0
Nonresidential Building Construction	10.2
Heavy Construction, except building	8.7
Highway and Street Construction	9.7
Heavy Construction, except highways	8.3
Plumbing, Heating, HVAC	11.3
Painting and Paper Hanging	6.9
Electrical Work	9.5
Masonry, Stonework and Plastering	10.5
Carpentry and Floor Work	12.2
Roofing, Siding, and Sheet Metal	10.3
Concrete Work	8.6
Specialty Trade Contracting	8.6

5. Safety Performance on Previous DDC Project(s)

___ YES ___ NO Contractor previously audited by the DDC Office of Site Safety.

DDC Project Number(s): _____, _____, _____

___ YES ___ NO Accident on previous DDC Project(s).

DDC Project Number(s): _____, _____, _____

___ YES ___ NO Fatality or Life-altering Injury on DDC Project(s) within the last three years. [Examples of a life-altering injury include loss of limb, loss of a sense (e.g., sight, hearing), or loss of neurological function].

DDC Project Number(s): _____, _____, _____

Date: _____ By: _____

(Signature of Owner, Partner, Corporate Officer)

Title: _____

(NO TEXT ON THIS PAGE)

Pre-Award Process

The bidder is advised that as part of the pre-award review of its bid, it may be required to submit the information described in Sections (A) through (D) below. If required, such information must be submitted by the bidder within five (5) business days following receipt of notification from DDC that it is among the low bidders. Such notification from DDC will be by facsimile or in writing and will specify the types of information must be submitted. The types of information the bidder may be required to submit are described below. In the event the bidder fails to submit the required information within the specified time frame, its bid may be rejected as nonresponsive.

****

(A) **Project Reference Form**: If required, the bidder must complete and submit the Project Reference Form set forth on pages 26 through 28 of this Bid Booklet. The Project Reference Form consists of 3 parts: (1) Similar Contracts Completed by the Bidder, (2) Contracts Currently Under Construction by the Bidder, and (3) Pending Contracts Not Yet Started by the Bidder.

(B) **Copy of License**: If required, the bidder must submit a copy of the license under which the bidder will be performing the work. Such license must clearly show the following: (1) Name of the Licensee, (2) License Number, and (3) Expiration date of the License. A copy of the license will be required from bidders for the following contracts: Plumbing Work, Electrical Work and Asbestos Abatement.

(C) **Financial Information**: If required, the bidder must submit the financial information described below:

(1) Audited Financial Statements: Financial statements (Balance Sheet and Income Statement) of the entity submitting the bid, as audited by an independent auditor licensed to practice as a certified public accountant (CPA). Audited financial statements for the three most recent fiscal years must be submitted. Each such financial statement must include the auditor's standard report.

If the bidder does not have audited financial statements, it must submit an affidavit attesting to the fact that the bidder does not have such statements. In addition, the bidder must submit the following documentation covering the three most recent fiscal years: signed federal tax returns, unaudited financial statements, and a "certified review letter" from a certified public accountant (CPA) verifying the unaudited financial statements.

Unless the most recent audited or unaudited financial statement was issued within ninety (90) days, the bidder must submit interim financial information that includes data on financial position and results of operation (income data) for the current fiscal year. Such information may be summarized on a monthly or quarterly basis or at other intervals.

(2) Schedule of Aged Accounts Receivable, including portion due within ninety (90) days.

(D) **Project Specific Information**: If required, the bidder must submit the project specific information described below:

(1) Statement indicating the number of years of experience the bidder has had and in what type of construction.
(2) Resumes of all key personnel to be involved in the project, including the proposed project superintendent.
(3) List of significant pieces of equipment expected to be used for the contract, and whether such equipment is owned or leased.
(4) Description of work expected to be subcontracted, and to what firms, if known.
(5) List of key material suppliers.
(6) Preliminary bar chart time schedule
(7) Contractor's expected means of financing the project. This should be based on the assumption that the contractor is required to finance 2X average monthly billings throughout the contract period.
(8) Any other issues the contractor sees as impacting his ability to complete the project according to the contract.

In addition to the information described in Sections (A) through (D) above, the bidder shall submit such additional information as the Commissioner may require, including without limitation, an explanation or justification for specific unit price items.

The bidder is further advised that it may be required to attend a pre-award meeting with DDC representatives. If such a meeting is convened, the bidder will be advised as to any additional material to be provided.

A. **PROJECT REFERENCES – SIMILAR CONTRACTS COMPLETED BY THE BIDDER**

List all contracts substantially completed within the last 4 years similar to the contract being awarded, up to a maximum of 10, in descending order of date of substantial completion.

Project & Location	Contract Type	Contract Amount ($000)	Date Completed	Owner Reference & Tel. No.	Architect/Engineer Reference & Tel. No. if different from owner
Reconst. & Catch Basin - Manhattan	Basins, Concrete, Sitework	$ 1,692.685	July 12'	Pierre Lamour 347-203-1360	In house DDC
Recon. & Market St Brooklyn	Watermain, Utilities Sitework	$ 5,094,847	March 12'	Carmine 718-907-5952	Brooklyn Navy Yard. In-house
Queens Plaza Improvements	Sitework Utilities	$ 38,332,205	April 10'	Dan Colaizzi 212-312-5765	NYCEDC In-house
Jackson Ave Streetscape	Sitework Utilities	$ 11,856,220	Sept 11'	Sal Nortano 212-312-3809	NYC EDC In-house

B. **PROJECT REFERENCES – CONTRACTS CURRENTLY UNDER CONSTRUCTION BY THE BIDDER**

List all contracts currently under construction even if they are not similar to the contract being awarded.

Project & Location	Contract Type	Contract Amount ($000)	Subcontracted to Others ($000)	Uncompleted Portion ($000)	Date Scheduled to Complete	Owner Reference & Tel. No.	Architect/Engineer Reference & Tel. No. if different from owner
MED617 Manhattan	Watermain Utilities	$5,586,880	Dawn Trucking $80,000	3,300,000	2015	NYCDDC Anil Patel 212-354-4985	
HWP2010M Bronx/Manhattan	Sidewalk Utilities	$4,195,738	$293,675	1,000,000	2015	NYCDDC ED Scarlino 212-768-0301	
HWPL2004M Manhattan	Trunk main watermain	$10,371,035	$260,000	10,000,000	2016	Danraj Dhani 917-675-6413	
HWMP116 Manhattan	Watermain, utilities	$15,754,866	$2,000,000	$10,000,000	2016	Chris Onyechi 212-442-1892	
HWD10S01A-R Bronx	Reconstruction	$2,697,835	$350,000	$2,000,000	2015	Lambert Monah 917-939-6966	

C. **PROJECT REFERENCES – PENDING CONTRACTS NOT YET STARTED BY THE BIDDER**

List all contracts awarded to or won by the bidder but not yet started.

Project & Location	Contract Type	Contract Amount ($000)	Date Scheduled to Start	Owner Reference & Tel. No.	Architect/Engineer Reference & Tel. No. if different from owner
HWSRT200A	Safe Routes (Curb, Water, S/W)	2,969,671	TBD	NYCDDC	
DC HWPL2008Q	Cooper Sq. Recon & Myrtle Plaza	$3,400,000	"	NYCDDC	
HWD10211	Recon of 185 + Amsterdam	$3,600,000	"	NYCDDC	
HWP2013TA	Complex Corners	$1,800,000	"	NYCDDC	

A. PROJECT REFERENCES – SIMILAR CONTRACTS COMPLETED BY THE BIDDER

List all contracts substantially completed within the last 4 years similar to the contract being awarded, up to a maximum of 10, in descending order of date of substantial completion.

Project & Location	Contract Type	Contract Amount ($000)	Date Completed	Owner Reference & Tel. No.	Architect/Engineer Reference & Tel. No. if different from owner

B. PROJECT REFERENCES – CONTRACTS CURRENTLY UNDER CONSTRUCTION BY THE BIDDER

List all contracts currently under construction even if they are not similar to the contract being awarded.

Project & Location	Contract Type	Contract Amount ($000)	Subcontracted to Others ($000)	Uncompleted Portion ($000)	Date Scheduled to Complete	Owner Reference & Tel. No.	Architect/Engineer Reference & Tel. No. if different from owner

C. PROJECT REFERENCES – PENDING CONTRACTS NOT YET STARTED BY THE BIDDER

List all contracts awarded to or won by the bidder but not yet started.

Project & Location	Contract Type	Contract Amount ($000)	Date Scheduled to Start	Owner Reference & Tel. No.	Architect/Engineer Reference & Tel. No. if different from owner

(NO TEXT ON THIS PAGE)

OFFICE OF THE MAYOR
BUREAU OF LABOR SERVICES
CONTRACT CERTIFICATE

To be completed if the contract is less than $1,000,000

Contractor: _____

Address: _____

_____

Telephone Number: _____

Name and Title of Signatory: _____

_____

Contracting Agency or Owner: _____

Project Number: _____

Proposed Contract Amount: _____

Description and Address of Proposed Contract: _____

Names of Subcontractors in the amount of 750,000 or more on this contract (if not known at this time, so state indicating that trades will be subcontracted):

_____

_____

_____

I, (fill in name of person signing) _____, hereby affirm that I am authorized by the above-named contractor to certify that said contractor's proposed contract with the above-named owner or city agency is less than $1,000,000. This affirmation is made in accordance with Executive Order No. 50 (1980) as amended and its implementing regulations.

_____ _____

Date Signature

WILLFUL OR FRAUDULENT FALSIFICATION OF ANY DATA OR INFORMATION SUBMITTED HEREWITH MAY RESULT IN THE TERMINATION OF ANY CONTRACT BETWEEN THE CITY AND THE BIDDER OR CONTRACTOR AND BAR THE BIDDER OR CONTRACTOR FROM PARTICIPATION IN ANY CITY CONTRACT FOR A PERIOD OF UP TO THREE YEARS. FURTHER,
SUCH FALSIFICATION MAY RESULT IN CRIMINAL PROSECUTION.

(NO TEXT ON THIS PAGE)

VENDEX COMPLIANCE

(A) Vendex Fees: Pursuant to Procurement Policy Board Rule 2-08(f)(2), the contractor will be charged a fee for the administration of the VENDEX system, including the Vendor Name Check process, if a Vendor Name Check review is required to be conducted by the Department of Investigation. The contractor shall also be required to pay the applicable required fees for any of its subcontractors for which Vendor Name Check reviews are required. The fee(s) will be deducted from payments made to the contractor under the contract. For contracts with an estimated value of less than or equal to $1,000,000, the fee will be $175 per Vendor Name Check review. For contracts with an estimated value of greater than $1,000,000, the fee will be $350 per Vendor Name Check review.

(B) Confirmation of Vendex Compliance: The Bidder shall submit this Confirmation of Vendex Compliance to the Department of Design and Construction, Contracts Section, 30-30 Thomson Avenue – First Floor, Long Island City, NY 11101.

Bid Information: The Bidder shall complete the bid information set forth below.

Name of Bidder: Triumph Const Corp
Bidder's Address: 1354 Seneca ave Bronx NY 10474
Bidder's Telephone Number: 718-861-6000
Bidder's Fax Number: 718-861-6660
Date of Bid Opening: 7/9/15
PROJECT ID: HWMM008

Vendex Compliance: To demonstrate compliance with Vendex requirements, the Bidder shall complete either Section (1) or Section (2) below, whichever applies.

(1) **Submission of Vendex Questionnaires to MOCS:** By signing in the space provided below, the Bidder certifies that as of the date specified below, the Bidder has submitted Vendex Questionnaires to the Mayor's Office of Contract Services, Attn: VENDEX, 253 Broadway, 9th Floor, New York, New York 10007.

Date of Submission: 11/21/13

By: _____
(Signature of Partner or corporate officer)

Print Name: Carlo Cuzzi

(2) **Submission of Certification of No Change to DDC:** By signing in the space provided below, the Bidder certifies that it has read the instructions in a "Vendor's Guide to Vendex" and that such instructions do not require the Bidder to submit Vendex Questionnaires. The Bidder has completed **TWO ORIGINALS** of the Certification of No Change set forth on the next page of this Bid Booklet.

By: _____
(Signature of Partner or corporate officer)

Print Name: Carlo Cuzzi

Certificate of No Change Form

Mayor's Office of Contract Services

- Please submit two completed forms. Copies will not be accepted.
- Please send both copies to the agency that requested it, unless you are advised to send it directly to the Mayor's Office of Contract Services (MOCS).
- A materially false statement willfully or fraudulently made in connection with this certification, and/or the failure to conduct appropriate due diligence in verifying the information that is the subject of this certification, may result in rendering the submitting entity non-responsible for the purpose of contract award.
- A materially false statement willfully or fraudulently made in connection with this certification may subject the person making the false statement to criminal charges

I, Carb Curri, being duly sworn, state that I have read
Enter Your Name

and understand all the items contained in the vendor questionnaire and any submission of change as identified on page one of this form and certify that as of this date, these items have not changed. I further certify that, to the best of my knowledge, information and belief, those answers are full, complete, and accurate; and that, to the best of my knowledge, information, and belief, those answers continue to be full, complete, and accurate.

In addition, I further certify on behalf of the submitting vendor that the information contained in the principal questionnaire(s) and any submission of change identified on page two of this form have not changed and have been verified and continue, to the best of my knowledge, to be full, complete and accurate.

I understand that the City of New York will rely on the information supplied in this certification as additional inducement to enter into a contract with the submitting entity.

Vendor Questionnaire *This section is required.*

This refers to the vendor questionnaire(s) submitted for the vendor doing business with the City.

Name of Submitting Entity: Triumph Const Corp.

Vendor's Address: 1354 Seneca ave Bronx NY 10474

Vendor's EIN or TIN: 134052635 Requesting Agency: NYCDDC

Are you submitting this Certification as a parent? (Please circle one) Yes (No)

Signature date on the last full vendor questionnaire signed for the submitting vendor: 11/21/13

Signature date on change submission for the submitting vendor: _____

Mayor's Office of Contract Services
253 Broadway, 9th Floor New York, NY 10007
Phone: 212 788 0018 Fax: 212 788 0049

Principal Questionnaire

This section refers to the most recent principal questionnaire submissions.

NYC Mayor's Office of Contract Services

	Principal Name	Date of signature on last full Principal Questionnaire	Date(s) of signature on submission of change
1	Carlo Cuzzi	11/21/13	
2			
3			
4			
5			
6			

☐ Check if additional changes were submitted and attach a document with the date of additional submissions.

Certification *This section is required.*

This form must be signed and notarized. Please complete this twice. Copies will not be accepted.

Certified By:

Carlo Cuzzi
Name (Print)

President
Title

Triumph Const Corp
Name of Submitting Entity

[signature] 7/9/15
Signature *Date*

Notarized By:

[signature] Westchester ON JA6078625
Notary Public *County License Issued* *License Number*

SHIRLEY JACOBS
NOTARY PUBLIC-STATE OF NEW YORK
No. 01JA6078625
Qualified in Westchester County
My Commission Expires August 05, 2018

Sworn to before me on: 7/9/15
Date

VENDEX COMPLIANCE

(A) Vendex Fees: Pursuant to Procurement Policy Board Rule 2-08(f)(2), the contractor will be charged a fee for the administration of the VENDEX system, including the Vendor Name Check process, if a Vendor Name Check review is required to be conducted by the Department of Investigation. The contractor shall also be required to pay the applicable required fees for any of its subcontractors for which Vendor Name Check reviews are required. The fee(s) will be deducted from payments made to the contractor under the contract. For contracts with an estimated value of less than or equal to $1,000,000, the fee will be $175 per Vendor Name Check review. For contracts with an estimated value of greater than $1,000,000, the fee will be $350 per Vendor Name Check review.

(B) Confirmation of Vendex Compliance: The Bidder shall submit this Confirmation of Vendex Compliance to the Department of Design and Construction, Contracts Section, 30-30 Thomson Avenue – First Floor, Long Island City, NY 11101.

Bid Information: The Bidder shall complete the bid information set forth below.

Name of Bidder: _____
Bidder's Address: _____
Bidder's Telephone Number: _____
Bidder's Fax Number: _____
Date of Bid Opening: _____
PROJECT ID: HWMM008 _____

Vendex Compliance: To demonstrate compliance with Vendex requirements, the Bidder shall complete either Section (1) or Section (2) below, whichever applies.

(1) **Submission of Vendex Questionnaires to MOCS:** By signing in the space provided below, the Bidder certifies that as of the date specified below, the Bidder has submitted Vendex Questionnaires to the Mayor's Office of Contract Services, Attn: VENDEX, 253 Broadway, 9th Floor, New York, New York 10007.

Date of Submission: _____

By: _____
(Signature of Partner or corporate officer)

Print Name: _____

(2) **Submission of Certification of No Change to DDC:** By signing in the space provided below, the Bidder certifies that it has read the instructions in a "Vendor's Guide to Vendex" and that such instructions do not require the Bidder to submit Vendex Questionnaires. The Bidder has completed **TWO ORIGINALS** of the Certification of No Change set forth on the next page of this Bid Booklet.

By: _____
(Signature of Partner or corporate officer)

Print Name: _____

(NO TEXT ON THIS PAGE)

Certificate of No Change Form

Mayor's Office of Contract Services

- Please submit two completed forms. Copies will not be accepted.
- Please send both copies to the agency that requested it, unless you are advised to send it directly to the Mayor's Office of Contract Services (MOCS).
- A materially false statement willfully or fraudulently made in connection with this certification, and/or the failure to conduct appropriate due diligence in verifying the information that is the subject of this certification, may result in rendering the submitting entity non-responsible for the purpose of contract award.
- A materially false statement willfully or fraudulently made in connection with this certification may subject the person making the false statement to criminal charges

I, _____, being duly sworn, state that I have read
Enter Your Name

and understand all the items contained in the vendor questionnaire and any submission of change as identified on page one of this form and certify that as of this date, these items have not changed. I further certify that, to the best of my knowledge, information and belief, those answers are full, complete, and accurate; and that, to the best of my knowledge, information, and belief, those answers continue to be full, complete, and accurate.

In addition, I further certify on behalf of the submitting vendor that the information contained in the principal questionnaire(s) and any submission of change identified on page two of this form have not changed and have been verified and continue, to the best of my knowledge, to be full, complete and accurate.

I understand that the City of New York will rely on the information supplied in this certification as additional inducement to enter into a contract with the submitting entity.

Vendor Questionnaire *This section is required.*

This refers to the vendor questionnaire(s) submitted for the vendor doing business with the City.

Name of Submitting Entity: _____

Vendor's Address: _____

Vendor's EIN or TIN: _____ Requesting Agency: _____

Are you submitting this Certification as a parent? (Please circle one) Yes No

Signature date on the last full vendor questionnaire signed for the submitting vendor: _____

Signature date on change submission for the submitting vendor: _____

Principal Questionnaire

This section refers to the most recent principal questionnaire submissions.

Mayor's Office of Contract Services

	Principal Name	Date of signature on last full Principal Questionnaire	Date(s) of signature on submission of change
1			
2			
3			
4			
5			
6			

☐ Check if additional changes were submitted and attach a document with the date of additional submissions.

Certification *This section is required.*

This form must be signed and notarized. Please complete this twice. Copies will not be accepted.

Certified By:

_____
Name (Print)

_____
Title

_____
Name of Submitting Entity

_____ _____
Signature *Date*

Notarized By:

_____ _____ _____
Notary Public *County License Issued* *License Number*

Sworn to before me on: _____
Date

Certificate of No Change Form

Mayor's Office of Contract Services

- Please submit two completed forms. Copies will not be accepted.
- Please send both copies to the agency that requested it, unless you are advised to send it directly to the Mayor's Office of Contract Services (MOCS).
- A materially false statement willfully or fraudulently made in connection with this certification, and/or the failure to conduct appropriate due diligence in verifying the information that is the subject of this certification, may result in rendering the submitting entity non-responsible for the purpose of contract award.
- A materially false statement willfully or fraudulently made in connection with this certification may subject the person making the false statement to criminal charges

I, _____, being duly sworn, state that I have read
Enter Your Name

and understand all the items contained in the vendor questionnaire and any submission of change as identified on page one of this form and certify that as of this date, these items have not changed. I further certify that, to the best of my knowledge, information and belief, those answers are full, complete, and accurate; and that, to the best of my knowledge, information, and belief, those answers continue to be full, complete, and accurate.

In addition, I further certify on behalf of the submitting vendor that the information contained in the principal questionnaire(s) and any submission of change identified on page two of this form have not changed and have been verified and continue, to the best of my knowledge, to be full, complete and accurate.

I understand that the City of New York will rely on the information supplied in this certification as additional inducement to enter into a contract with the submitting entity.

Vendor Questionnaire *This section is required.*

This refers to the vendor questionnaire(s) submitted for the vendor doing business with the City.

Name of Submitting Entity: _____

Vendor's Address: _____

Vendor's EIN or TIN: _____ Requesting Agency: _____

Are you submitting this Certification as a parent? (Please circle one) Yes No

Signature date on the last full vendor questionnaire signed for the submitting vendor: _____

Signature date on change submission for the submitting vendor: _____

Mayor's Office of Contract Services
253 Broadway, 9th Floor New York, NY 10007
Phone: 212 788 0018 Fax: 212 788 0049

Principal Questionnaire

This section refers to the most recent principal questionnaire submissions.

Mayor's Office of Contract Services

	Principal Name	Date of signature on last full Principal Questionnaire	Date(s) of signature on submission of change
1			
2			
3			
4			
5			
6			

☐ Check if additional changes were submitted and attach a document with the date of additional submissions.

Certification *This section is required.*

This form must be signed and notarized. Please complete this twice. Copies will not be accepted.

Certified By:

_____
Name (Print)

_____
Title

_____
Name of Submitting Entity

_____ _____
Signature *Date*

Notarized By:

_____ _____ _____
Notary Public *County License Issued* *License Number*

Sworn to before me on: _____
Date

IRAN DIVESTMENT ACT COMPLIANCE RIDER

FOR NEW YORK CITY CONTRACTORS

The Iran Divestment Act of 2012, effective as of April 12, 2012, is codified at State Finance Law ("SFL") §165-a and General Municipal Law ("GML") §103-g. The Iran Divestment Act, with certain exceptions, prohibits municipalities, including the City, from entering into contracts with persons engaged in investment activities in the energy sector of Iran. Pursuant to the terms set forth in SFL §165-a and GML §103-g, a person engages in investment activities in the energy sector of Iran if:

(a) The person provides goods or services of twenty million dollars or more in the energy sector of Iran, including a person that provides oil or liquefied natural gas tankers, or products used to construct or maintain pipelines used to transport oil or liquefied natural gas, for the energy sector of Iran; or

(b) The person is a financial institution that extends twenty million dollars or more in credit to another person, for forty-five days or more, if that person will use the credit to provide goods or services in the energy sector in Iran and is identified on a list created pursuant to paragraph (b) of subdivision three of Section 165-a of the State Finance Law and maintained by the Commissioner of the Office of General Services.

A bid or proposal shall not be considered for award nor shall any award be made where the bidder or proposer fails to submit a signed and verified bidder's certification.

Each bidder or proposer must certify that it is not on the list of entities engaged in investment activities in Iran created pursuant to paragraph (b) of subdivision 3 of Section 165-a of the State Finance Law. In any case where the bidder or proposer cannot certify that they are not on such list, the bidder or proposer shall so state and shall furnish with the bid or proposal a signed statement which sets forth in detail the reasons why such statement cannot be made. The City of New York may award a bid to a bidder who cannot make the certification on a case by case basis if:

(1) The investment activities in Iran were made before the effective date of this section (i.e., April 12, 2012), the investment activities in Iran have not been expanded or renewed after the effective date of this section and the person has adopted, publicized and is implementing a formal plan to cease the investment activities in Iran and to refrain from engaging in any new investments in Iran: or

(2) The City makes a determination that the goods or services are necessary for the City to perform its functions and that, absent such an exemption, the City would be unable to obtain the goods or services for which the contract is offered. Such determination shall be made in writing and shall be a public document.

BIDDER'S CERTIFICATION OF COMPLIANCE WITH IRAN DIVESTMENT ACT

Pursuant to General Municipal Law §103-g, which generally prohibits the City from entering into contracts with persons engaged in investment activities in the energy sector of Iran, the bidder/proposer submits the following certification:

[*Please Check One*]

BIDDER'S CERTIFICATION

☐ By submission of this bid or proposal, each bidder/proposer and each person signing on behalf of any bidder/proposer certifies, and in the case of a joint bid each party thereto certifies as to its own organization, under penalty of perjury, that to the best of its knowledge and belief, that each bidder/proposer is not on the list created pursuant to paragraph (b) of subdivision 3 of Section 165-a of the State Finance Law.

☐ I am unable to certify that my name and the name of the bidder/proposer does not appear on the list created pursuant to paragraph (b) of subdivision 3 of Section 165-a of the State Finance Law. I have attached a signed statement setting forth in detail why I cannot so certify.

Dated: _____, New York
_____, 20 __

_____
SIGNATURE

_____
PRINTED NAME

_____
TITLE

Sworn to before me this
_____ day of____, 20____

_____
Notary Public

Dated:

BIDDER'S CERTIFICATION OF COMPLIANCE WITH IRAN DIVESTMENT ACT

Pursuant to General Municipal Law §103-g, which generally prohibits the City from entering into contracts with persons engaged in investment activities in the energy sector of Iran, the bidder/proposer submits the following certification:

[*Please Check One*]

BIDDER'S CERTIFICATION

☑ By submission of this bid or proposal, each bidder/proposer and each person signing on behalf of any bidder/proposer certifies, and in the case of a joint bid each party thereto certifies as to its own organization, under penalty of perjury, that to the best of its knowledge and belief, that each bidder/proposer is not on the list created pursuant to paragraph (b) of subdivision 3 of Section 165-a of the State Finance Law.

☐ I am unable to certify that my name and the name of the bidder/proposer does not appear on the list created pursuant to paragraph (b) of subdivision 3 of Section 165-a of the State Finance Law. I have attached a signed statement setting forth in detail why I cannot so certify.

Dated: Bronx, New York
July 7, 2015

SIGNATURE

Carlo Curti
PRINTED NAME

President
TITLE

Sworn to before me this
7 day of July, 2015

SHIRLEY JACOBS
Notary Public NOTARY PUBLIC-STATE OF NEW YORK
No. 01JA6078625
Dated: Qualified in Westchester County
My Commission Expires August 05, 2018

The City of New York
Department of Small Business Services
Division of Labor Services
Contract Compliance Unit
110 William Street
New York, New York 10038
Phone: (212) 513 – 6323
Fax: (212) 618-8879

CONSTRUCTION EMPLOYMENT REPORT INSTRUCTIONS

WHO MUST FILE A CONSTRUCTION EMPLOYMENT REPORT

A Construction Employment Report (ER) must be filed if you meet the following conditions:

CONTRACT FUNDING SOURCE	CONTRACTOR	CONTRACT VALUE	SUBMISSION REQUIREMENT
Federal/Federally assisted	Prime and subcontractors	$10,000 or greater	Construction Employment Report
City and state funded	Prime contractor	$1,000,000 or greater	
	Subcontractor	$750,000 or greater	
		Less than $750,000	Less than $750,000 Certificate (City/State Only)

Prime Contractor:

- A general contractor or construction manager selected to perform work on a construction project funded (in whole or in part) by the federal government with a proposed contract value of $10,000 or more.
- A general contractor or construction manager selected to perform work on a construction project funded or assisted by the City of New York with a proposed contract value of $1,000,000 or more.

Subcontractor:

- A subcontractor selected to perform work on a construction project funded (in whole or in part) by the federal government with a proposed contract value of $10,000 or more.
- A subcontractor selected to perform work on a construction project funded or assisted by the City of New York with a proposed contract value of $750,000 or more.
- A subcontractor selected to perform work on a construction project funded or assisted by the City of New York with a proposed contract value of less than $750,000 must submit a "Less than $750,000" certificate.

WHERE TO FILE

Employment Reports must be filed with the City agency awarding the contract. If you are a contractor or subcontractor who will be working for a private developer in receipt of funding or assistance from the City, the ER must be filed with the City agency with jurisdiction over the developer's project.

DLS REVIEW PROCESS

In accordance with Executive Order 50 (EO 50), upon receipt by DLS of a completed ER, DLS conducts a review of the contractor's current employment policies, practices and procedures, as well as perform a statistical analysis of the contractor's workforce, if necessary. The process is as follows:

1. Within five (5) business days, DLS will review the ER for completeness and accuracy. If any information is omitted or incorrect, or if necessary documents are not submitted, the submission shall be deemed incomplete and DLS will inform the contractor. The substantive compliance review does not commence until the submission is complete. **An incomplete submission will delay the review process and may preclude or interrupt the contract approval.**

2. If the ER submission is complete, the compliance review will proceed, resulting in one of the following:

   Certificate of Approval
   The contractor is found to be in compliance with all applicable laws and regulations. The approval is valid for 36 months.

   Continued Approval Certificate
   The contractor has been issued a Certificate of Approval in the previous 36 months which is good for the applicable contract.

   Conditional Certificate of Compliance
   The contractor is required to take corrective actions in order to be in compliance with EO 50. The contractor must meet the conditions within one month of the issue of the Conditional Certificate.

   Determination of Nonperformance
   The contractor has failed to take the required corrective actions stipulated in the Conditional Certificate. A determination of nonperformance may prevent a contractor from receiving an award of a contract.

HOW TO COMPLETE THE EMPLOYMENT REPORT

Contents

General Information
Part I: Contractor/Subcontractor Information
Part II: Employment Policies and Practices
Part III: Contract Bid Information and Projected and Current Workforce Forms
Signature Page

PART I: CONTRACTOR/SUBCONTRACTOR INFORMATION

Questions 7 – 11: Please provide the required contact information for your company. All contracts must have a designated Equal Employment Officer.

Question 12: If you are a subcontractor, you must state the name of the contractor for whom you are providing the construction services.

Question 13: Please provide the number of permanent employees in your company.

Question 14a-g: The Project Identification Number (PIN) and the Contract Registration ID Number (CT#) can be obtained from the City agency. Provide a description of the trade work you will perform on this project and the address where the work will be performed. Subcontractors can obtain this information from the contract they have with the prime contractor.

Questions 15 – 18: If your company has received a valid Certificate of Approval within the past 36 months, been audited by the United States Department of Labor, Office of Federal Contract Compliance Programs (OFCCP), or if your company has submitted an ER for a different contract for which you have not yet received a compliance certificate, then you only need to complete and submit the following:

- General Information section
- Part I - Contractor/Subcontractor Information
- Form B - Projected Workforce
- Signature Page

If your company is currently waiting for an approval on another contract previously submitted, be certain to identify the date on which you submitted the completed Employment Report, the name of the City contracting agency with which the contract was made, and the name and telephone number of the person to whom the Employment Report was submitted.

If your company was issued a Conditional Certificate of Approval, all required corrective actions must have been taken or DLS will not issue a Continued Certificate.

Question 18: If the company was audited by the OFCCP, also provide the following:

- Identify the reviewing OFCCP office by its name and address
- If an unconditional certificate of compliance was issued by the OFCCP, attach a copy of the certificate in lieu of completing Parts II and III;
- Include copies of all corrective actions and documentation of OFCCP's performance; and
- Provide a copy of all stated OFCCP findings.

Question 19: Please provide a copy of any Collective Bargaining Agreement(s) which is negotiated through an employer trade association on behalf of your organization or any of its affiliates.

PART II: EMPLOYMENT POLICIES AND PRACTICES

Remember to label all documents with the question number for which they are submitted.

Questions 20a – j: You must respond to the questions as to whether or not your firm has documents reflecting written policies, benefits and procedures. If so, then you must identify by name each document in which the policy(ies), procedure(s) and benefit(s) is located and submit copies of all of the document(s). If your firm follows unwritten practices or procedures, include an explanation of how they operate. Please submit the most current document(s), including all applicable amendments. Label each document and/or unwritten practice according to the question to which it corresponds (e.g. 20a, 20b, etc.)

Questions 21a – h: Inquires about the manner/methods by which you comply with the requirements of the Immigration Reform and Control Act of 1986 (IRCA).

Question 22: Inquires into where and how I-9 forms are maintained and stored.

Questions 23a – e: Inquires into whether or not there is a requirement that an applicant or employee be subjected to a medical examination at any given time. Copes of the medical information questionnaire and instructions must be submitted with the Employment Report.

Question 24: Indicate the existence and location of all statements of your firm's Equal Employment Opportunity policy and attach a copy of each statement.

Question 25: Submit any current Affirmative Action Plan(s) created pursuant to Executive Order 11246.

Question 26: If your firm or collective bargaining agreement has an internal grievance procedure, indicate this and submit a copy of the policy and procedure. If unwritten, explain its nature and operation. Explain how your firm's procedure addresses EEO complaints.

Question 27: If your employees have used the procedure in the last three (3) years, please submit an explanation in the format indicated below:

1. Number of complaint(s)	2. Nature of the complaint(s)	3. Position(s) of the complainant(s)	4. Was an investigation conducted? Y/N	5. Current status of the disposition

Question 28: Indicate whether in the past three (3) years complaints have been filed with a court of law or administrative agency, naming your company as a defendant (or respondent) in a complaint alleging violation of any anti-discrimination or affirmative action laws. If yes, develop and submit a log to show, for each administrative/and or judicial action filed, the following information:

1. Name(s) of complainant(s)	2. Administrative agency or court in which action was filed	3. Nature of the complaint(s)	4. Current status	5. If not pending, the complaint's disposition

Question 29: Identify each job for which a physical qualification exists. Identify and explain the physical qualification(s) for each stated job. Submit job descriptions for each job and the reasons for the qualifications.

Question 30: Identify each job for which there exists any qualification related to age, race, color, national origin, sex, creed, disability, marital status, sexual orientation or citizenship status. Identify and explain the specific related qualification for each job stated. Submit job descriptions for each job and the reasons for the qualifications.

PART III: CONTRACT BID INFORMATION AND PROJECTED AND CURRENT WORKFORCE FORMS

FORM A: CONTRACT BID INFORMATION – USE OF SUBCONTRACTORS/TRADES

Your projections for the utilization of subcontractors on the proposed contract are to be provided in this section. A chart has been provided for the identification of subcontractors. Information is to be provided to the extent known at the time the ER is filed for review by DLS. If the subcontractor's name is unknown, then write "unknown". Under "ownership", enter the appropriate race/ethnic and gender code. If the contract is federally funded or assisted and the subcontractor is being utilized in accordance with applicable federal requirements with respect to Minority Business Enterprise or Woman Business Enterprise requirements, enter the appropriate code. This will also apply to state funded contracts with similar requirements for minority and female owned businesses.

FORM B: PROJECTED WORKFORCE FOR WORK TO BE PERFORMED ON THIS PROJECT

For each trade to be engaged by your company for this project, enter the projected workforce for Males and Females by trade classification in the charts provided.

FORM C: CURRENT WORKFORCE FOR WORK TO BE PERFORMED ON THIS PROJECT

For each trade *currently* engaged by your company for all work performed in NYC, enter the current workforce for Males and Females by trade classification in the charts provided.

SIGNATURE PAGE

The signatory of this Employment Report and all other documents submitted to DLS must be an official authorized to enter into a binding legal agreement. The signature page must be completed in its entirety and notarized. Only original signatures will be accepted.

The City of New York Department of Small Business Services
Division of Labor Services Contract Compliance Unit
110 William Street, New York, New York 10038
Phone: (212) 513 – 6323
Fax: (212) 618-8879

CONSTRUCTION EMPLOYMENT REPORT

GENERAL INFORMATION

1. Your contractual relationship in this contract is: Prime contractor_x_ Subcontractor____

1a. Are M/WBE goals attached to this project? Yes ____ No ____

2. Please check one of the following if your firm would like information on how to certify with the City of New York as a:

___Minority Owned Business Enterprise
___Women Owned Business Enterprise
___Disadvantaged Business Enterprise
___Locally Based Business Enterprise
___Emerging Business Enterprise

2a. If you are certified as an **MBE**, **WBE**, **LBE, EBE** or **DBE**, what city/state agency are you certified with? _____ Are you DBE certified? Yes ____ No ____

3. Please indicate if you would like assistance from SBS in identifying certified M/WBEs for contracting opportunities: Yes___ No___

4. Is this project subject to a project labor agreement? Yes ____ No ____

5. Are you a Union contractor? Yes ____ No ____ If yes, please list which local(s) you affiliated with _____

6. Are you a Veteran owned company? Yes ____ No ____

PART I: CONTRACTOR/SUBCONTRACTOR INFORMATION

7. _____
Employer Identification Number or Federal Tax I.D. Email Address

8. _____
Company Name

9. _____
Company Address and Zip Code

10. _____
Chief Operating Officer Telephone Number

11. _____
Designated Equal Opportunity Compliance Officer Telephone Number
(If same as Item #10, write "same")

12. _____
Name of Prime Contractor and Contact Person
(If same as Item #8, write "same")

13. Number of employees in your company: _____

14. Contract information:

(a) _____ (b) _____
Contracting Agency (City Agency) Contract Amount

(c) _____ (d) _____
Procurement Identification Number (PIN) Contract Registration Number (CT#)

(e) _____ (f) _____
Projected Commencement Date Projected Completion Date

(g) Description and location of proposed contract:

_____

_____

15. Has your firm been reviewed by the Division of Labor Services (DLS) within the past 36 months and issued a Certificate of Approval? Yes___ No___

If yes, attach a copy of certificate.

16. Has DLS within the past month reviewed an Employment Report submission for your company and issued a Conditional Certificate of Approval? Yes___ No___

If yes, attach a copy of certificate.

NOTE: DLS WILL NOT ISSUE A CONTINUED CERTIFICATE OF APPROVAL IN CONNECTION WITH THIS CONTRACT UNLESS THE REQUIRED CORRECTIVE ACTIONS IN PRIOR CONDITIONAL CERTIFICATES OF APPROVAL HAVE BEEN TAKEN.

17. Has an Employment Report already been submitted for a different contract (not covered by this Employment Report) for which you have not yet received compliance certificate?
Yes___ No___ If yes,

Date submitted: _____
Agency to which submitted: _____
Name of Agency Person: _____
Contract No: _____
Telephone: _____

18. Has your company in the past 36 months been audited by the United States Department of Labor, Office of Federal Contract Compliance Programs (OFCCP)? Yes___ No___

If yes,

(a) Name and address of OFCCP office.

_____

_____

(b) Was a Certificate of Equal Employment Compliance issued within the past 36 months? Yes___ No___

If yes, attach a copy of such certificate.

(c) Were any corrective actions required or agreed to? Yes___ No___

If yes, attach a copy of such requirements or agreements.

(d) Were any deficiencies found? Yes___ No___

If yes, attach a copy of such findings.

19. Is your company or its affiliates a member or members of an employers' trade association which is responsible for negotiating collective bargaining agreements (CBA) which affect construction site hiring? Yes___ No___

If yes, attach a list of such associations and all applicable CBA's.

PART II: DOCUMENTS REQUIRED

20. For the following policies or practices, attach the relevant documents (e.g., printed booklets, brochures, manuals, memoranda, etc.). If the policy(ies) are unwritten, attach a full explanation of the practices. See instructions.

___ (a) Health benefit coverage/description(s) for all management, nonunion and union employees (whether company or union administered)

___ (b) Disability, life, other insurance coverage/description

___ (c) Employee Policy/Handbook

___ (d) Personnel Policy/Manual

___ (e) Supervisor's Policy/Manual

___ (f) Pension plan or 401k coverage/description for all management, nonunion and union employees, whether company or union administered

___ (g) Collective bargaining agreement(s).

___ (h) Employment Application(s)

___ (i) Employee evaluation policy/form(s).

___ (j) Does your firm have medical and/or non-medical (i.e. education, military, personal, pregnancy, child care) leave policy?

21. To comply with the Immigration Reform and Control Act of 1986 when and of whom does your firm require the completion of an I-9 Form?

(a) Prior to job offer	Yes___ No___
(b) After a conditional job offer	Yes___ No___
(c) After a job offer	Yes___ No___
(d) Within the first three days on the job	Yes___ No___
(e) To some applicants	Yes___ No___
(f) To all applicants	Yes___ No___
(g) To some employees	Yes___ No___
(h) To all employees	Yes___ No___

22. Explain where and how completed I-9 Forms, with their supportive documentation, are maintained and made accessible.

_____

_____

23. Does your firm or any of its collective bargaining agreements require job applicants to take a medical examination? Yes___ No___

If yes, is the medical examination given:

(a) Prior to a job offer	Yes___ No___
(b) After a conditional job offer	Yes___ No___
(c) After a job offer	Yes___ No___
(d) To all applicants	Yes___ No___
(e) Only to some applicants	Yes___ No___

If yes, list for which applicants below and attach copies of all medical examination or questionnaire forms and instructions utilized for these examinations.

_____

_____

24. Do you have a written equal employment opportunity (EEO) policy? Yes___ No___

If yes, list the document(s) and page number(s) where these written policies are located.

_____

_____

25. Does the company have a current affirmative action plan(s) (AAP)

_____Minorities and Women

_____Individuals with handicaps

_____Other. Please specify _____

26. Does your firm or collective bargaining agreement(s) have an internal grievance procedure with respect to EEO complaints? Yes___ No___

If yes, please attach a copy of this policy.

If no, attach a report detailing your firm's unwritten procedure for handling EEO complaints.

27. Has any employee, within the past three years, filed a complaint pursuant to an internal grievance procedure or with any official of your firm with respect to equal employment opportunity? Yes___ No___

If yes, attach an internal complaint log. See instructions.

28. Has your firm, within the past three years, been named as a defendant (or respondent) in any administrative or judicial action where the complainant (plaintiff) alleged violation of any anti-discrimination or affirmative action laws? Yes___ No___

If yes, attach a log. See instructions.

29. Are there any jobs for which there are physical qualifications? Yes___ No___

If yes, list the job(s), submit a job description and state the reason(s) for the qualification(s).

_____

_____

30. Are there any jobs for which there are age, race, color, national origin, sex, creed, disability, marital status, sexual orientation, or citizenship qualifications? Yes___ No___

If yes, list the job(s), submit a job description and state the reason(s) for the qualification(s).

_____

_____

SIGNATURE PAGE

I, (print name of authorized official signing)_____ hereby certify that the information submitted herewith is true and complete to the best of my knowledge and belief and submitted with the understanding that compliance with New York City's equal employment requirements, as contained in Chapter 56 of the City Charter, Executive Order No. 50 (1980), as amended, and the implementing Rules and Regulations, is a contractual obligation. I also agree on behalf of the company to submit a certified copy of payroll records to the Division of Labor Services on a monthly basis.

_____

Contractor's Name

_____

Name of person who prepared this Employment Report Title

_____

Name of official authorized to sign on behalf of the contractor Title

_____

Telephone Number

_____

Signature of authorized official Date

If contractors are found to be underutilizing minorities and females in any given trade based on Chapter 56 Section 3H, the Division of Labor Services reserves the right to request the contractor's workforce data and to implement an employment program.

Contractors who fail to comply with the above mentioned requirements or are found to be in noncompliance may be subject to the withholding of final payment.

Willful or fraudulent falsifications of any data or information submitted herewith may result in the termination of the contract between the City and the bidder or contractor and in disapproval of future contracts for a period of up to five years. Further, such falsification may result in civil and/and or criminal prosecution.

To the extent permitted by law and consistent with the proper discharge of DLS' responsibilities under Charter Chapter 56 of the City Charter and Executive Order No. 50 (1980) and the implementing Rules and Regulations, all information provided by a contractor to DLS shall be confidential.

Only original signatures accepted.

Sworn to before me this _____ day of _____ 20 _____

_____

Notary Public Authorized Signature Date

FORM A. CONTRACT BID INFORMATION: USE OF SUBCONTRACTORS/TRADES

1. Do you plan to subcontractor work on this contract? Yes___ No___

2. If yes, complete the chart below.

NOTE: All proposed subcontractors with a subcontract in excess of $750,000 must complete an Employment Report for review and approval before the contract may be awarded and work commences.

SUBCONTRACTOR'S NAME*	OWNERSHIP (ENTER APPROPRIATE CODE LETTERS BELOW)	WORK TO BE PERFORMED BY SUBCONTRACTOR	TRADE PROJECTED FOR USE BY SUBCONTRACTOR	PROJECTED DOLLAR VALUE OF SUBCONTRACT

***If subcontractor is presently unknown, please enter the trade (craft name).**

OWNERSHIP CODES
- W: White
- B: Black
- H: Hispanic
- A: Asian
- N: Native American
- F: Female

FORM B: PROJECTED WORKFORCE

TRADE CLASSIFICATION CODES

(J) Journeylevel Workers
(A) Apprentice
(H) Helper
(TRN) Trainee
(TOT) Total by Column

For each trade to be engaged by your company for this project, enter the projected workforce for Males and Females by trade classification on the charts below.

Trade: _____

Union Affiliation, if applicable _____

Total (Col. #1-10): _____

Total Minority, Male & Female (Col. #2,3,4,5,7,8,9, & 10): _____

Total Female (Col. #6 – 10): _____

	MALES					FEMALES				
	(1) White Non Hisp.	(2) Black Non Hisp.	(3) Hisp.	(4) Asian	(5) Native Amer.	(6) White Non Hisp.	(7) Black Non Hisp.	(8) Hisp.	(9) Asian	(10) Native Amer.
J										
H										
A										
TRN										
TOT										

What are the recruitment sources for you projected hires (i.e., unions, government employment office, job tap center, community outreach)?

_____

_____

FOR OFFICE USE ONLY: File No._____

FORM B: PROJECTED WORKFORCE

Trade:

_____

Union Affiliation, if applicable

_____

Total (Col. #1-10):

_____

Total Minority, Male & Female (Col. #2,3,4,5,7,8,9, & 10):

_____

Total Female (Col. #6 – 10):

_____

	MALES					FEMALES				
	(1) White Non Hisp.	(2) Black Non Hisp.	(3) Hisp.	(4) Asian	(5) Native Amer.	(6) White Non Hisp.	(7) Black Non Hisp.	(8) Hisp.	(9) Asian	(10) Native Amer.
J										
H										
A										
TRN										
TOT										

What are the recruitment sources for you projected hires (i.e., unions, government employment office, job tap center, community outreach)?

_____

_____

FORM C: CURRENT WORKFORCE

TRADE CLASSIFICATION CODES

(J) Journeylevel Workers
(A) Apprentice
(H) Helper
(TRN) Trainee
(TOT) Total by Column

For each trade currently engaged by your company for all work performed in New York City, enter the current workforce for Males and Females by trade classification on the charts below.

Trade: _____

Union Affiliation, if applicable _____

Total (Col. #1-10): _____

Total Minority, Male & Female (Col. #2,3,4,5,7,8,9, & 10): _____

Total Female (Col. #6 – 10): _____

	MALES					FEMALES				
	(1) White Non Hisp.	(2) Black Non Hisp.	(3) Hisp.	(4) Asian	(5) Native Amer.	(6) White Non Hisp.	(7) Black Non Hisp.	(8) Hisp.	(9) Asian	(10) Native Amer.
J										
H										
A										
TRN										
TOT										

What are the recruitment sources for you projected hires (i.e., unions, government employment office, job tap center, community outreach)?

_____

_____

FOR OFFICE USE ONLY: File No._____

FORM C: CURRENT WORKFORCE

Trade:

_____

Union Affiliation, if applicable

_____

Total (Col. #1-10):

_____

Total Minority, Male & Female (Col. #2,3,4,5,7,8,9, & 10):

_____

Total Female (Col. #6 – 10):

_____

	MALES					FEMALES				
	(1) White Non Hisp.	(2) Black Non Hisp.	(3) Hisp.	(4) Asian	(5) Native Amer.	(6) White Non Hisp.	(7) Black Non Hisp.	(8) Hisp.	(9) Asian	(10) Native Amer.
J										
H										
A										
TRN										
TOT										

What are the recruitment sources for you projected hires (i.e., unions, government employment office, job tap center, community outreach)?

_____

_____

(NO TEXT ON THIS PAGE)

FOR OFFICE USE ONLY: File No._____

The City of New York Department of Small Business Services
Division of Labor Services Contract Compliance Unit
110 William Street, New York, New York 10038
Phone: (212) 513 – 6323
Fax: (212) 618-8879

CONSTRUCTION EMPLOYMENT REPORT

GENERAL INFORMATION

1. Your contractual relationship in this contract is: Prime contractor____ Subcontractor__x__

1a. Are M/WBE goals attached to this project? Yes ____ No ____

2. Please check one of the following if your firm would like information on how to certify with the City of New York as a:

___Minority Owned Business Enterprise
___Women Owned Business Enterprise
___Disadvantaged Business Enterprise
___Locally Based Business Enterprise
___Emerging Business Enterprise

2a. If you are certified as an **MBE**, **WBE**, **LBE**, **EBE** or **DBE**, what city/state agency are you certified with? _____ Are you DBE certified? Yes ____ No ____

3. Please indicate if you would like assistance from SBS in identifying certified M/WBEs for contracting opportunities: Yes___ No___

4. Is this project subject to a project labor agreement? Yes ____ No ____

5. Are you a Union contractor? Yes ____ No ____ If yes, please list which local(s) you affiliated with _____

6. Are you a Veteran owned company? Yes ____ No ____

PART I: CONTRACTOR/SUBCONTRACTOR INFORMATION

7. _____
Employer Identification Number or Federal Tax I.D. Email Address

8. _____
Company Name

9. _____
Company Address and Zip Code

10. _____
Chief Operating Officer Telephone Number

11. _____
Designated Equal Opportunity Compliance Officer Telephone Number
(If same as Item #10, write "same")

12. _____
Name of Prime Contractor and Contact Person
(If same as Item #8, write "same")

13. Number of employees in your company: _____

14. Contract information:

(a) _____ Contracting Agency (City Agency)

(b) _____ Contract Amount

(c) _____ Procurement Identification Number (PIN)

(d) _____ Contract Registration Number (CT#)

(e) _____ Projected Commencement Date

(f) _____ Projected Completion Date

(g) Description and location of proposed contract:

_____

_____

15. Has your firm been reviewed by the Division of Labor Services (DLS) within the past 36 months and issued a Certificate of Approval? Yes___ No___

If yes, attach a copy of certificate.

16. Has DLS within the past month reviewed an Employment Report submission for your company and issued a Conditional Certificate of Approval? Yes___ No___

If yes, attach a copy of certificate.

NOTE: DLS WILL NOT ISSUE A CONTINUED CERTIFICATE OF APPROVAL IN CONNECTION WITH THIS CONTRACT UNLESS THE REQUIRED CORRECTIVE ACTIONS IN PRIOR CONDITIONAL CERTIFICATES OF APPROVAL HAVE BEEN TAKEN.

17. Has an Employment Report already been submitted for a different contract (not covered by this Employment Report) for which you have not yet received compliance certificate?
Yes___ No___ If yes,

Date submitted: _____
Agency to which submitted: _____
Name of Agency Person: _____
Contract No: _____
Telephone: _____

18. Has your company in the past 36 months been audited by the United States Department of Labor, Office of Federal Contract Compliance Programs (OFCCP)? Yes___ No___

If yes,

(a) Name and address of OFCCP office.

_____

_____

(b) Was a Certificate of Equal Employment Compliance issued within the past 36 months? Yes___ No___

If yes, attach a copy of such certificate.

(c) Were any corrective actions required or agreed to? Yes___ No___

If yes, attach a copy of such requirements or agreements.

(d) Were any deficiencies found? Yes___ No___

If yes, attach a copy of such findings.

19. Is your company or its affiliates a member or members of an employers' trade association which is responsible for negotiating collective bargaining agreements (CBA) which affect construction site hiring? Yes___ No___

If yes, attach a list of such associations and all applicable CBA's.

PART II: DOCUMENTS REQUIRED

20. For the following policies or practices, attach the relevant documents (e.g., printed booklets, brochures, manuals, memoranda, etc.). If the policy(ies) are unwritten, attach a full explanation of the practices. See instructions.

___ (a) Health benefit coverage/description(s) for all management, nonunion and union employees (whether company or union administered)

___ (b) Disability, life, other insurance coverage/description

___ (c) Employee Policy/Handbook

___ (d) Personnel Policy/Manual

___ (e) Supervisor's Policy/Manual

___ (f) Pension plan or 401k coverage/description for all management, nonunion and union employees, whether company or union administered

___ (g) Collective bargaining agreement(s).

___ (h) Employment Application(s)

___ (i) Employee evaluation policy/form(s).

___ (j) Does your firm have medical and/or non-medical (i.e. education, military, personal, pregnancy, child care) leave policy?

21. To comply with the Immigration Reform and Control Act of 1986 when and of whom does your firm require the completion of an I-9 Form?

(a) Prior to job offer	Yes___ No___
(b) After a conditional job offer	Yes___ No___
(c) After a job offer	Yes___ No___
(d) Within the first three days on the job	Yes___ No___
(e) To some applicants	Yes___ No___
(f) To all applicants	Yes___ No___
(g) To some employees	Yes___ No___
(h) To all employees	Yes___ No___

22. Explain where and how completed I-9 Forms, with their supportive documentation, are maintained and made accessible.

_____

_____

23. Does your firm or any of its collective bargaining agreements require job applicants to take a medical examination? Yes___ No___

If yes, is the medical examination given:

(a) Prior to a job offer	Yes___ No___
(b) After a conditional job offer	Yes___ No___
(c) After a job offer	Yes___ No___
(d) To all applicants	Yes___ No___
(e) Only to some applicants	Yes___ No___

If yes, list for which applicants below and attach copies of all medical examination or questionnaire forms and instructions utilized for these examinations.

_____

_____

24. Do you have a written equal employment opportunity (EEO) policy? Yes___ No___

If yes, list the document(s) and page number(s) where these written policies are located.

_____

_____

25. Does the company have a current affirmative action plan(s) (AAP)
_____Minorities and Women
_____Individuals with handicaps
_____Other. Please specify _____

26. Does your firm or collective bargaining agreement(s) have an internal grievance procedure with respect to EEO complaints? Yes___ No___

If yes, please attach a copy of this policy.

If no, attach a report detailing your firm's unwritten procedure for handling EEO complaints.

27. Has any employee, within the past three years, filed a complaint pursuant to an internal grievance procedure or with any official of your firm with respect to equal employment opportunity? Yes___ No___

If yes, attach an internal complaint log. See instructions.

28. Has your firm, within the past three years, been named as a defendant (or respondent) in any administrative or judicial action where the complainant (plaintiff) alleged violation of any anti-discrimination or affirmative action laws? Yes___ No___

If yes, attach a log. See instructions.

29. Are there any jobs for which there are physical qualifications? Yes___ No___

If yes, list the job(s), submit a job description and state the reason(s) for the qualification(s).

_____

_____

30. Are there any jobs for which there are age, race, color, national origin, sex, creed, disability, marital status, sexual orientation, or citizenship qualifications? Yes___ No___

If yes, list the job(s), submit a job description and state the reason(s) for the qualification(s).

_____

_____

SIGNATURE PAGE

I, (print name of authorized official signing)_____ hereby certify that the information submitted herewith is true and complete to the best of my knowledge and belief and submitted with the understanding that compliance with New York City's equal employment requirements, as contained in Chapter 56 of the City Charter, Executive Order No. 50 (1980), as amended, and the implementing Rules and Regulations, is a contractual obligation. I also agree on behalf of the company to submit a certified copy of payroll records to the Division of Labor Services on a monthly basis.

_____
Contractor's Name

_____
Name of person who prepared this Employment Report Title

_____
Name of official authorized to sign on behalf of the contractor Title

_____
Telephone Number

_____
Signature of authorized official Date

If contractors are found to be underutilizing minorities and females in any given trade based on Chapter 56 Section 3H, the Division of Labor Services reserves the right to request the contractor's workforce data and to implement an employment program.

Contractors who fail to comply with the above mentioned requirements or are found to be in noncompliance may be subject to the withholding of final payment.

Willful or fraudulent falsifications of any data or information submitted herewith may result in the termination of the contract between the City and the bidder or contractor and in disapproval of future contracts for a period of up to five years. Further, such falsification may result in civil and/and or criminal prosecution.

To the extent permitted by law and consistent with the proper discharge of DLS' responsibilities under Charter Chapter 56 of the City Charter and Executive Order No. 50 (1980) and the implementing Rules and Regulations, all information provided by a contractor to DLS shall be confidential.

Only original signatures accepted.

Sworn to before me this _____ day of _____ 20 _____

_____
Notary Public Authorized Signature Date

FORM A. CONTRACT BID INFORMATION: USE OF SUBCONTRACTORS/TRADES

1. Do you plan to subcontractor work on this contract? Yes___ No___

2. If yes, complete the chart below.

NOTE: All proposed subcontractors with a subcontract in excess of $750,000 must complete an Employment Report for review and approval before the contract may be awarded and work commences.

SUBCONTRACTOR'S NAME*	OWNERSHIP (ENTER APPROPRIATE CODE LETTERS BELOW)	WORK TO BE PERFORMED BY SUBCONTRACTOR	TRADE PROJECTED FOR USE BY SUBCONTRACTOR	PROJECTED DOLLAR VALUE OF SUBCONTRACT

***If subcontractor is presently unknown, please enter the trade (craft name).**

OWNERSHIP CODES
- W: White
- B: Black
- H: Hispanic
- A: Asian
- N: Native American
- F: Female

FORM B: PROJECTED WORKFORCE

TRADE CLASSIFICATION CODES

(J) Journeylevel Workers
(A) Apprentice
(H) Helper
(TRN) Trainee
(TOT) Total by Column

For each trade to be engaged by your company for this project, enter the projected workforce for Males and Females by trade classification on the charts below.

Trade: _____

Union Affiliation, if applicable _____

Total (Col. #1-10): _____

Total Minority, Male & Female (Col. #2,3,4,5,7,8,9, & 10): _____

Total Female (Col. #6 – 10): _____

	MALES					FEMALES				
	(1) White Non Hisp.	(2) Black Non Hisp.	(3) Hisp.	(4) Asian	(5) Native Amer.	(6) White Non Hisp.	(7) Black Non Hisp.	(8) Hisp.	(9) Asian	(10) Native Amer.
J										
H										
A										
TRN										
TOT										

What are the recruitment sources for you projected hires (i.e., unions, government employment office, job tap center, community outreach)?

_____

_____

FOR OFFICE USE ONLY: File No._____

FORM B: PROJECTED WORKFORCE

Trade:

_____

Union Affiliation, if applicable

_____

Total (Col. #1-10):

_____

Total Minority, Male & Female (Col. #2,3,4,5,7,8,9, & 10):

_____

Total Female (Col. #6 – 10):

_____

	MALES					FEMALES				
	(1) White Non Hisp.	(2) Black Non Hisp.	(3) Hisp.	(4) Asian	(5) Native Amer.	(6) White Non Hisp.	(7) Black Non Hisp.	(8) Hisp.	(9) Asian	(10) Native Amer.
J										
H										
A										
TRN										
TOT										

What are the recruitment sources for you projected hires (i.e., unions, government employment office, job tap center, community outreach)?

_____

_____

FOR OFFICIAL USE ONLY: File No._____

FORM C: CURRENT WORKFORCE

TRADE CLASSIFICATION CODES

(J) Journeylevel Workers
(A) Apprentice
(H) Helper
(TRN) Trainee
(TOT) Total by Column

For each trade currently engaged by your company for all work performed in New York City, enter the current workforce for Males and Females by trade classification on the charts below.

Trade: _____

Union Affiliation, if applicable _____

Total (Col. #1-10): _____

Total Minority, Male & Female (Col. #2,3,4,5,7,8,9, & 10): _____

Total Female (Col. #6 – 10): _____

	MALES					FEMALES				
	(1) White Non Hisp.	(2) Black Non Hisp.	(3) Hisp.	(4) Asian	(5) Native Amer.	(6) White Non Hisp.	(7) Black Non Hisp.	(8) Hisp.	(9) Asian	(10) Native Amer.
J										
H										
A										
TRN										
TOT										

What are the recruitment sources for you projected hires (i.e., unions, government employment office, job tap center, community outreach)?

_____

_____

FOR OFFICE USE ONLY: File No._____

FORM C: CURRENT WORKFORCE

Trade: _____

Union Affiliation, if applicable _____

Total (Col. #1-10): _____

Total Minority, Male & Female (Col. #2,3,4,5,7,8,9, & 10): _____

Total Female (Col. #6 – 10): _____

	MALES					FEMALES				
	(1) White Non Hisp.	(2) Black Non Hisp.	(3) Hisp.	(4) Asian	(5) Native Amer.	(6) White Non Hisp.	(7) Black Non Hisp.	(8) Hisp.	(9) Asian	(10) Native Amer.
J										
H										
A										
TRN										
TOT										

What are the recruitment sources for you projected hires (i.e., unions, government employment office, job tap center, community outreach)?

_____

_____

(NO TEXT ON THIS PAGE)

FOR OFFI USE ONLY: File No._____

The City of New York Department of Small Business Services
Division of Labor Services Contract Compliance Unit
110 William Street, New York, New York 10038
Phone: (212) 513 - 6323 Fax: (212) 618-8879

Date _____ File Number _____

LESS THAN $750,000 SUBCONTRACT CERTIFICATE
(CITY, STATE AND ICIP ONLY)

Are you currently certified as one of the following? Please check yes or no:

MBE Yes ___No ___ WBE Yes ___No ___ LBE Yes ___No ___

DBE Yes___No___ EBE Yes ___ No ___

If you are certified as an MBE, WBE, LBE, EBE or DBE, what city/state agency are you certified with?

_____

Please check one of the following if your firm would like information on how to certify with the City of New York as a:

___Minority Owned Business Enterprise ___Locally based Business Enterprise

___Women Owned Business Enterprise ___Emerging Business Enterprise

___Disadvantaged Business Enterprise

_____
Company Name Employer Identification Number or Federal Tax I.D

_____
Company Address and Zip Code

_____
Contact Person (First Name, Last Name) Telephone Number

_____
Fax Number E-mail Address

Description and location of proposed subcontract:_____
_____
_____

Are you a Union contractor? Yes ____ No ____ If yes, please list which local(s) you affiliated with

_____

Are you a Veteran owned company? Yes ____ No ____

_____ _____
Procurement Identification Number (PIN) Contract Registration Number (CT#)
(City contracts only) (City contracts only)

Revised 8/13
FOR OFFICIAL USE ONLY: File No._____

Block and Lot Number
(ICIP projects only)

Contract Amount

I, (print name of authorized official signing)_____ hereby certify that I am authorized by the above-named subcontractor to certify that said subcontractor's proposed contract with the above named owner or City agency is less than $750,000. This affirmation is made in accordance with NYC Charter Chapter 56, Executive Order No. 50 (1980) and the implementing Rules.

Willful or fraudulent falsifications of any data or information submitted herewith may result in the termination of the contract between the City and the bidder or contractor and in disapproval of future contracts for a period of up to five years. Further, such falsification may result in civil and/and or criminal prosecution.

Signature of authorized official

Date

Only original signatures accepted.

Sworn to before me this _____ day of _____ 20 _____

Notary Public

Authorized Signature

Date

Revised 8/13

FOR OFFICIAL USE ONLY: File No._____

Department of Design and Construction

INFRASTRUCTURE DIVISION
BUREAU OF DESIGN

VOLUME 1 OF 3

PROJECT ID: HWMM008

SAFETY AND STREETSCAPE IMPROVEMENTS
EAST 86TH STREET BETWEEN PARK AVENUE AND SECOND AVENUE

SCHOOL SAFETY NECKDOWNS
MADISON AVENUE BETWEEN EAST 84TH STREET AND EAST 85TH STREET

INCLUDING WATER MAIN, STREET LIGHTING, AND TRAFFIC SIGNAL WORK

Together With All Work Incidental Thereto

BOROUGH OF MANHATTAN
CITY OF NEW YORK

_____

Contractor.

_____

Dated_____, **20**____

_____

Department of Design and Construction

THE CITY OF NEW YORK
DEPARTMENT OF DESIGN AND CONSTRUCTION
DIVISION OF INFRASTRUCTURE

30-30 THOMSON AVENUE
LONG ISLAND CITY, NEW YORK 11101-3045
TELEPHONE (718) 391-1000
WEBSITE www.nyc.gov/buildnyc

VOLUME 2 OF 3

INFORMATION FOR BIDDERS
CONTRACT
PERFORMANCE AND PAYMENT BONDS
PREVAILING WAGE SCHEDULE

FOR FURNISHING ALL LABOR AND MATERIALS NECESSARY AND REQUIRED FOR:

PROJECT ID: HWMM008

SAFETY AND STREETSCAPE IMPROVEMENTS
EAST 86TH STREET BETWEEN PARK AVENUE AND SECOND AVENUE

SCHOOL SAFETY NECKDOWNS
MADISON AVENUE BETWEEN EAST 84TH STREET AND EAST 85TH STREET

INCLUDING WATER MAIN, STREET LIGHTING, AND TRAFFIC SIGNAL WORK

Together With All Work Incidental Thereto

BOROUGH OF MANHATTAN
CITY OF NEW YORK

FOR THE DEPARTMENT OF TRANSPORTATION
PREPARED BY
HDR HENNINGSON DURHAM & RICHARDSON
ARCHITECTURE AND ENGINEERING PC

April 15, 2015

M 5-165

Department of Design and Construction

THE CITY OF NEW YORK
DEPARTMENT OF DESIGN AND CONSTRUCTION
DIVISION OF INFRASTRUCTURE

30-30 THOMSON AVENUE
LONG ISLAND CITY, NEW YORK 11101-3045
TELEPHONE (718) 391-1000
WEBSITE www.nyc.gov/buildnyc

VOLUME 2 OF 3

INFORMATION FOR BIDDERS
CONTRACT
PERFORMANCE AND PAYMENT BONDS
PREVAILING WAGE SCHEDULE

FOR FURNISHING ALL LABOR AND MATERIALS NECESSARY AND REQUIRED FOR:

PROJECT ID:

FOR THE DEPARTMENT OF TRANSPORTATION
PREPARED BY

January 30, 2015

NOTICE TO BIDDERS

Please be advised that the City of New York has issued a new Standard Construction Contract. The new Contract, which is incorporated in this bid, is significantly different from the 2008 version previously used by the City. A listing of some of the significant changes is provided below. This notice is only a partial listing. Please refer to the Contract itself for a full understanding of the changes and the actual text of the changes that were made. The text of the revised Standard Construction Contract is the controlling document should there be any discrepancies between this notice and the Standard Construction Contract.

Significant changes include the following:

ARTICLE 11 DAMAGES CAUSED BY DELAYS

In 2008, the City embarked on a pilot project to test the use of new construction contract language altering the allocation of the risk of project delays, as between the City and the contractor. The City has determined to make the pilot project language the standard language for all City construction contracts. Accordingly, there is now one Standard City Construction Contract that it to be used by all agencies for all bids released after the release of the new contract. The damages for delay language is Article 11. Please note that changes have been made to the damages for delay provisions from the pilot to the adopted version.

ARTICLE 22 INSURANCE

Changes have been made to the insurance provisions, including incorporating requirements that the insurance provided comply with recent NYC Department of Buildings regulations specifying required dollar limits for CGL insurance for certain projects and requiring proof of builder's risk insurance prior to Work commencing rather than within 10 days of award.

ARTICLE 26 EXTRA WORK

The percentage paid for overhead for Extra Work pursuant to Section 26.1.11 is increased from 10% to 12% and the calculation of Worker's Compensation insurance costs reimbursed for Extra Work has been clarified.

ARTICLE 37 LABOR LAW REQUIREMENTS
ARTICLE 38 PAYROLL REPORTS

The provisions governing Labor Law provisions have been tightened, including requirements the employee identification cards include a photo (unless the requirement is waived), a prohibition on cash payments to employees and subcontractors, and clear enforcement authority requirements.

ARTICLE 70 ELECTRONIC FILING

A provision is added to make mandatory the electronic filing of certain alteration permits with the Department of Buildings.

Other significant changes include the following:

ARTICLE 7 INDEMNIFICATION

Changes have been made to the indemnification provisions.

ARTICLE14 FINAL ACCEPTANCE OF WORK
ARTICLE 44 SUBSTANTIAL COMPLETION PAYMENT

The Commissioner is no longer required to issue a substantial completion determination in addition to the already existing requirement that the Engineer issue a substantial completion determination and reach an agreement on a punch list of remaining work. Now, the Engineer, when issuing the punch list to the Contractor, must also include a proposed schedule for the completion of the punch list. The Contractor may propose an alternative schedule that is subject to the approval of the Engineer. If the Contractor fails to respond to the Engineer's proposed schedule, the Engineer's schedule is deemed accepted.

ARTICLE 15 LIQUIDATED DAMAGES

The contract is revised to match Schedule A to provide that liquidated damages are available only until substantial completion.

ARTICLE 17 SUBCONTRACTS

The requirements for prior approval of subcontractors, and for contractors to be responsible for the actions of their subcontractors, have been tightened. The requirement that the Contractor list subcontractors in the City's Payee Information Portal has been added; the provision was previously attached as a rider.

ARTICLE 19 SECURITY DEPOSIT

The provisions governing the return of bid deposits are clarified.

ARTICLE 20 PAYMENT GUARANTEE

The Payment Guaranty provisions, which apply when the City does not require the Contractor to obtain payment bonds, has been significantly revised to track the requirements of State Finance law 137.

ARTICLE 28 RECORDKEEPING FOR EXTRA OR DISPUTED WORK

The recordkeeping requirement that currently apply to payments for Time & Materials for extra work are expressly made applicable to regular work that is paid for on a T & M basis.

ARTICLE 35 EMPLOYEES

The whistleblower provisions of local law are added to the construction contract. They previously have been attached as a rider.

ARTICLE 38 PAYROLL REPORTS
ARTICLE 77 RECORDS RETENTION

Requirements that records be maintained for six years and directions on how such records must be made available.

ARTICLE 42 PARTIAL PAYMENTS

Increased flexibility has been provided for when contractors may submit invoices.

ARTICLE 62 TAX EXEMPTION

The provisions identifying the State tax exemption for municipalities are revised to more clearly describe State law.

(NO TEXT ON THIS PAGE)

CITY OF NEW YORK

DEPARTMENT OF DESIGN AND CONSTRUCTION DIVISION OF INFRASTRUCTURES

INFORMATION FOR BIDDERS

SEPTEMBER 2008

(NO TEXT ON THIS PAGE)

CITY OF NEW YORK CITY
DEPARTMENT OF DESIGN AND CONSTRUCTION
INFORMATION FOR BIDDERS

TABLE OF CONTENTS

SECTION 1.	DESCRIPTION AND LOCATION OF WORK	1
SECTION 2.	TIME AND PLACE FOR RECEIPT OF BIDS	1
SECTION 3.	DEFINITIONS	1
SECTION 4.	INVITATION FOR BIDS AND CONTRACT DOCUMENTS	1
SECTION 5.	PRE-BID CONFERENCE	2
SECTION 6.	AGENCY CONTACT	2
SECTION 7.	BIDDER'S OATH	2
SECTION 8.	EXAMINATION AND VIEWING OF SITE, CONSIDERATION OF OTHER SOURCES OF INFORMATION AND CHANGED CONDITIONS	2
SECTION 9.	EXAMINATION OF PROPOSED CONTRACT	3
SECTION 10.	FORM OF BID	3
SECTION 11.	IRREVOCABILITY OF BID	3
SECTION 12.	ACKNOWLEDGMENT OF AMENDMENTS	4
SECTION 13.	BID SAMPLES AND DESCRIPTIVE LITERATURE	4
SECTION 14.	PROPRIETARY INFORMATION/TRADE SECRETS	4
SECTION 15.	PRE-OPENING MODIFICATION OR WITHDRAWAL OF BIDS	4
SECTION 16.	BID EVALUATION AND AWARD	4
SECTION 17.	LATE BIDS, LATE WITHDRAWALS AND LATE MODIFICATIONS	5
SECTION 18.	WITHDRAWAL OF BIDS.	5
SECTION 19.	MISTAKE IN BIDS	5
SECTION 20.	LOW TIE BIDS	6
SECTION 21.	REJECTION OF BIDS	6
SECTION 22.	RIGHT TO APPEAL DETERMINATIONS OF NON-RESPONSIVENESS OR NON-RESPONSIBILITY AND RIGHT TO PROTEST SOLICITATIONS AND AWARD	7
SECTION 23.	AFFIRMATIVE ACTION AND EQUAL EMPLOYMENT OPPORTUNITY	7
SECTION 24.	VENDEX QUESTIONNAIRES	7
SECTION 25.	COMPLAINTS ABOUT THE BID PROCESS	8
SECTION 26.	BID, PERFORMANCE AND PAYMENT SECURITY	8
SECTION 27.	FAILURE TO EXECUTE CONTRACT	9
SECTION 28.	BIDDER RESPONSIBILITIES AND QUALIFICATIONS	9
SECTION 29.	EMPLOYMENT REPORT	10
SECTION 30.	LABOR LAW REQUIREMENTS	10
SECTION 31.	INSURANCE	10
SECTION 32.	LUMP SUM CONTRACTS	11
SECTION 33.	UNIT PRICE CONTRACTS	11
SECTION 34.	EXCISE TAX	11
SECTION 35.	LICENSES AND PERMITS	11
SECTION 36.	MULTIPLE PRIME CONTRACTORS	11
SECTION 37.	LOCALLY BASED ENTERPRISE REQUIREMENTS (LBE)	12
SECTION 38.	BID SUBMISSION REQUIREMENTS	13
SECTION 39.	COMPTROLLER'SCERTIFICATE	14
SECTION 40.	PROCUREMENT POLICY BOARD RULES	14
SECTION 41.	DDC SAFETY REQUIREMENTS	14

(NO TEXT ON THIS PAGE)

INFORMATION FOR BIDDERS

1. Description and Location of Work

The description and location of the work for which bids are requested are specified in Attachment 1, "Bid Information". Attachment 1 is included as page A-1 of the Bid Booklet.

2. Time and Place for Receipt of Bids

Sealed bids shall be received on or before the date and hour specified in Attachment 1, at which time they will be publicly opened and read aloud in the presence of the Commissioner or his or her representative, and any bidders who may desire to be present.

3. Definitions

The definitions set forth in the Procurement Policy Board Rules shall apply to this Invitation For Bids.

4. Invitation For Bids and Contract Documents

(A) Except for titles, sub-titles, headings, running headlines, tables of contents and indices (all of which are printed herein merely for convenience) the following, except for such portions thereof as may be specifically excluded, shall be deemed to be part of the Contract and the Invitation for Bids.

(1) All provisions required by law to be inserted in this Contract, whether actually inserted or not
(2) The Contract Drawings and Specifications
(3) The General Conditions, the General Requirements and the Special Conditions, if any
(4) The Contract
(5) The Information for Bidders; Request for Proposals; Notice of Solicitation and Proposal For Bids; Bid or Proposal, and, if used, the Bid Booklet
(6) The Budget Director's Certificate; all Addenda issued prior to the receipt of the bids; the Notice of Award; Performance and Payment Bonds, if required; and the Notice to Proceed with the Work.

(B) For particulars as to this procurement, including quantity and quality of the purchase, extent of the work or labor to be performed, delivery and performance schedule, and any other special instructions, prospective bidders are referred to the Invitation For Bids Documents. A copy of such documents can be obtained at the location set forth in Attachment 1.

(C) Deposit for Copy of Invitation For Bids Documents: Prospective bidders may obtain a copy of the Invitation For Bids Documents by complying with the conditions set forth in the Notice of Solicitation. The deposit must be in the form of a check or money order made payable to the City of New York, and drawn upon a state or national bank or trust company, or a check of such bank or trust company signed by a duly authorized officer thereof.

(D) Return of Invitation For Bids Documents: All Invitation For Bids Documents must be returned to the Department upon request. If the bidder elects not to submit a bid thereunder, the

Invitation For Bids Documents shall be returned to the Department, along with a statement that no bid will be submitted.

(E) Return of Deposit: Such deposit will be returned within 30 days after the award of the contract or the rejection of all bids as set forth in the advertisement, provided the Invitation For Bids Documents are returned to the location specified in Attachment 1, in physical condition satisfactory to the Commissioner.

(F) Additional Copies: Additional copies of the Invitation For Bids Documents may be obtained, subject to the conditions set forth in the advertisement for bids.

5. Pre-Bid Conference

A pre-bid conference shall be held as set forth in Attachment 1. Nothing stated at the pre-bid conference shall change the terms or conditions of the Invitation For Bids Documents, unless a change is made by written amendment as provided in Section 9 below. Failure to attend a mandatory pre-bid conference shall constitute grounds for the rejection of the bid.

6. Agency Contact

Any questions or correspondence relating to this bid solicitation shall be addressed to the Agency Contact person specified in Attachment 1.

7. Bidder's Oath

(A) The bid-shall be properly signed by an authorized representative of the bidder and the bid shall be verified by the written oath of the authorized representative who signed the bid, that the several matters stated and information furnished therein are in all aspects true.

(B) A materially false statement willfully or fraudulently made in connection with the bid or any of the forms completed and submitted with the bid may result in the termination of any Contract between the City and the Bidder. As a result, the Bidder may be barred from participating in future City contracts as well as be subject to possible criminal prosecution.

8. Examination and Viewing of Site, Consideration of Other Sources of Information and Changed Conditions

(A) Pre-Bidding (Investigation) Viewing of Site -Bidders must carefully view and examine the site of the proposed work, as well as its adjacent area, and seek other usual sources of information, for they will be conclusively presumed to have full knowledge of any and all conditions on, about or above the site relating to or affecting in any way the performance of the work to be done under the Contract which were or should have been indicated to a reasonably prudent bidder. To arrange a date for visiting the work site, bidders are to contact the Agency Contact person specified in Attachment 1.

(B) Should the contractor encounter during the progress of the work subsurface conditions at the site materially differing from any shown on the Contract Drawings or indicated in the Specifications or such subsurface conditions as could not reasonably have been anticipated by the contractor and were not anticipated by the City, which conditions will materially affect the cost of the work to be done under the

Contract, the attention of the Commissioner must be called immediately to such conditions before they are disturbed. The Commissioner shall thereupon promptly investigate the conditions. If he finds that they do so materially differ, or that they could not have been reasonably anticipated by the contractor and were not anticipated by the City, the Contract may be modified with his written approval.

9. Examination of Proposed Contract

(A) Request for Interpretation or Correction: Prospective bidders must examine the Contract Documents carefully and before bidding must request the Commissioner in writing for an interpretation or correction of every patent ambiguity, inconsistency or error therein which should have been discovered by a reasonably prudent bidder. Such interpretation or correction, as well as any additional contract provisions the Commissioner may decide to include, will be issued in writing by the Commissioner as an addendum to the Contract, which will be transmitted to each person recorded as having received a copy of the Contract Documents from the Department. Transmission of such addendum will be by mail, e-mail, facsimile or hand delivery. Such addendum will also be posted at the place where the Contract Documents are available for the inspection of prospective bidders. Upon transmission as provided for herein, such addendum shall become a part of the Contract Documents, and binding on all bidders, whether or not actual notice of such addendum is shown.

(B) Only Commissioner's Interpretation or Correction Binding: Only the written interpretation or correction so given by the Commissioner shall be binding, and prospective bidders are warned that no other officer, agent or employee of the City is authorized to give information concerning, or to explain or interpret, the Contract.

(C) Documents given to a subcontractor for the purpose of soliciting the subcontractor's bid shall include either a copy of the bid cover sheet or a separate information sheet setting forth the project name, the Contract number (if available), the contracting agency and the Project's location.

10. Form of Bid

Each bid must be submitted upon the prescribed form and must contain: a) the name, residence and place of business of the person or persons making the same; b) the names of all persons interested therein, and if no other person is so interested, such fact must be distinctly stated; c) a statement to the effect that it is made without any connection with any other person making a bid for the same purpose and that it is in all respects fair and without collusion or fraud; d) a statement that no Council member or other officer or employee or person whose salary is payable in whole or part from the City Treasury is directly or indirectly interested therein or in the supplies, materials or equipment and work or labor to which it relates, or in any portion of the profits thereof; e) a statement that the bidder is not in arrears to the City or to any agency upon a debt or contract or taxes, and is not a defaulter as surety or otherwise upon any obligation to the City to any agency thereof, except as set forth in the bid.

THE BID SHALL BE TYPEWRITTEN OR WRITTEN LEGIBLY IN INK. THE BID SHALL BE SIGNED IN INK. ERASURES OR ALTERATIONS SHALL BE INITIALED BY THE SIGNER IN INK. FAILURE TO CONFORM TO THE REQUIREMENTS OF THIS SECTION 10 SHALL RESULT IN THE REJECTION OF THE BID.

11. Irrevocability of Bid

The prices set forth in the bid cannot be revoked and shall be effective until the award of the Contract, unless the bid is withdrawn as provided for in Sections 15 and 18 below.

12. Acknowledgment of Amendments

The receipt of any amendment to the Contract Documents shall be acknowledged by the bidder in its bid submission.

13. Bid Samples and Descriptive Literature

Bid samples and descriptive literature shall not be submitted by the bidder, unless expressly requested elsewhere in the Contract or Contract Documents. Any unsolicited bid samples or descriptive literature which are submitted shall not be examined or tested and shall not be deemed to vary any of the provisions of this Contract.

14. Proprietary Information/Trade Secrets

(A) The bidder shall identify those portions of the bid which it deems to be confidential, proprietary information or trade secrets, and provide justification why such materials shall not be disclosed by the City. All such materials shall be clearly indicated by stamping the pages on which such information appears, at the top and bottom thereof with the word "Confidential". Such materials stamped "Confidential" must be easily separable from the non-confidential sections of the bid.

(B) All such materials so indicated shall be reviewed by the Agency and any decision not to honor a request for confidentiality shall be communicated in writing to the bidder. For those bids which are unsuccessful, all such confidential materials shall be returned to the bidder. Prices, makes and model or catalog numbers of the items offered, deliveries, and terms of payment shall be publicly available after bid opening, regardless of any designation of confidentiality made by the bidder.

15. Pre-Opening Modification or Withdrawal of Bids

Bids may be modified or withdrawn by written notice received in the office designated in Attachment 1, before the time and date set for the bid opening. If a bid is withdrawn in accordance with this Section, the bid security, if any, shall be returned to the bidder.

16. Bid Evaluation and Award

In accordance with the New York City Charter, the Procurement Policy Board Rules and the terms and conditions of this Invitation For Bids, this Contract shall be awarded, if at all, to the responsible bidder whose bid meets the requirements and evaluation criteria set forth in the Invitation For Bids, and whose bid price is either the most favorable bid price or, if the Invitation For Bids so states, the most favorable evaluated bid price. A bid may not be evaluated for any requirement or criterion that is not disclosed in the Invitation For Bids.

Restriction: No negotiations with any bidder shall be allowed to take place except under the circumstances and in the manner set forth in Section 21. Nothing in this Section shall be deemed to permit a contract award to a bidder submitting a higher quality item than that designated in the Invitation For Bids, if that bid is not also the most favorable bid.

17. Late Bids, Late Withdrawals and Late Modifications

Any bid received at the place designated in the solicitation after the time and date set for receipt of bids is late and shall not be considered. Any request for withdrawal or modification received at the place designated in the solicitation after the time and date set for receipt of bids is late and shall not be considered. The exception to this provision is that a late modification of a successful bid that makes the bid terms more favorable to the City shall be considered at any time it is received.

18. Withdrawal of Bids.

Except as provided for in Section 15, above, a bidder may not withdraw its bid before the expiration of forty-five (45) days after the date of the opening of bids; thereafter, a bidder may withdraw its bid only in writing and in advance of an actual award. If within sixty (60) days after the execution of the Contract, the Commissioner fails to fix the date for commencement of work by written notice to the bidder, the bidder, at his option, may ask to be relieved of his obligation to perform the work called for by written notice to the Commissioner. If such notice is given to the Commissioner, and the request to withdraw is granted, the bidder waives all claims in connection with this Contract.

19. Mistake in Bids

(A) Mistake Discovered Before Bid Opening: A bidder may correct mistakes discovered before the time and date set for bid opening by withdrawing or correcting the bid as provided in Section 15 above.

(B) Mistakes Discovered Before Award

(1) In accordance with General Municipal Law (Section 103, subdivision 11), where a unilateral error or mistake is discovered in a bid, such bid may be withdrawn upon written approval of the Agency Chief Contracting Officer if the following conditions are met:

(a) The mistake is known or made known to the agency prior to the awarding of the Contract or within 3 days after the opening of the bid, whichever period is shorter; and
(b) The price bid was based upon an error of such magnitude that enforcement would be unconscionable; and
(c) The bid was submitted in good faith and the bidder submits credible evidence that the mistake was a clerical error as opposed to a judgment error; and
(d) The error in the bid is actually due to an unintentional and substantial arithmetic error or an unintentional omission of a substantial quantity of work, labor, material or services made directly in the compilation of the bid, which unintentional arithmetic error or unintentional omission can be clearly shown by objective evidence drawn from inspection of the original work paper, documents, or materials used in the preparation of the bid sought to be withdrawn; and
(e) It is possible to place the agency in the same position as existed prior to the bid.

(2) Unless otherwise required by law, the sole remedy for a bid mistake in accordance with this Article shall be withdrawal of the bid, and the return of the bid bond, or other security, if any, to the bidder. Thereafter, the agency may, in its discretion, award the Contract to the next lowest bidder or rebid the Contract. Any amendment to or reformation of a bid or a Contract to rectify such an error or mistake

therein is strictly prohibited.

(3) If the mistake and the intended correct bid are clearly evident on the face of the bid document, the bid shall be corrected to the intended correct bid and may not be withdrawn. Examples of mistakes that may be corrected are typographical errors, errors in extending unit prices, transposition errors and arithmetical errors.

20. Low Tie Bids

(A) When two or more low responsive bids from responsible bidders are identical in price, meeting all the requirements and criteria set forth in the Invitation For Bids, the Agency Chief Contracting Officer will break the tie in the following manner and order of priority:

(1) Award to a certified New York City small, minority or woman-owned business entity bidder;
(2) Award to a New York City bidder;
(3) Award to a certified New York State small, minority or woman-owned business bidder;
(4) Award to a New York State bidder.

(B) If two or more bidders still remain equally eligible after application of paragraph (A) above, award shall be made by a drawing by lot limited to those bidders. The bidders involved shall be invited to attend the drawing. A witness shall be present to verify the drawing and shall certify the results on the bid tabulation sheet.

21. Rejection of Bids

(A) Rejection of Individual Bids: The Agency may reject a bid if:

(1) The bidder fails to furnish any of the information required pursuant to Section 24 or 28 hereof; or if
(2) The bidder is determined to be not responsible pursuant to the Procurement Policy Board Rules; or if
(3) The bid is determined to be non-responsive pursuant to the Procurement Policy Board Rules; or if
(4) The bid, in the opinion of the Agency Chief Contracting Officer, contains unbalanced bid prices and is thus non-responsive, unless the bidder can show that the prices are not unbalanced for the probable required quantity of items, or if the imbalance is corrected pursuant to Section 15.

(B) Rejection of All Bids: The Agency, upon written approval by the Agency Chief Contracting Officer, may reject all bids and may elect to resolicit bids if in its sole opinion it shall deem it in the best interest of the City so to do.

(C) Rejection of All Bids and Negotiation With All Responsible Bidders: The Agency Head may determine that it is appropriate to cancel the Invitation For Bids after bid opening and before award and to complete the acquisition by negotiation. This determination shall be based on one of the following reasons:

(1) All otherwise acceptable bids received are at unreasonable prices, or only one bid is received and the Agency Chief Contracting Officer cannot determine the reasonableness of the bid price, or no responsive bid has been received from a responsible bidder; or

(2) In the judgment of the Agency Chief Contracting Officer, the bids were not independently arrived at in open competition, were collusive, or were submitted in bad faith.

(D) When the Agency has determined that the Invitation for Bids is to be canceled and that use of negotiation is appropriate to complete the acquisition, the contracting officer may negotiate and award the Contract without issuing a new solicitation, subject to the following conditions:

(1) prior notice of the intention to negotiate and a reasonable opportunity to negotiate have been given by the contracting officer to each responsible bidder that submitted a bid in response to the Invitation for Bids;

(2) the negotiated price is the lowest negotiated price offered by a responsible bidder; and

(3) the negotiated price is lower than the lowest rejected bid price of a responsible bidder that submitted a bid in response to the Invitation for Bids.

22. Right to Appeal Determinations of Non-Responsiveness or Non-Responsibility and Right to Protest Solicitations and Award

The bidder has the right to appeal a determination of non-responsiveness or non-responsibility and has the right to protest a solicitation and award. For further information concerning these rights, the bidder is directed to the Procurement Policy Board Rules.

23. Affirmative Action and Equal Employment Opportunity

This Invitation For Bids is subject to applicable provisions of Federal, State and Local Laws and executive orders requiring affirmative action and equal employment opportunity.

24. VENDEX Questionnaires

(A) Requirement: Pursuant to Administrative Code Section 6-116.2 and the PPB Rules, bidders may be obligated to complete and submit VENDEX Questionnaires. Generally, if this bid is $100,000 or more, or if this bid when added to the sum total of all contracts, concessions and franchises the bidder has received from the City and any subcontracts received from City contractors over the past twelve months, equals or exceeds $100,000, Vendex Questionnaires must be completed. If required, Vendex Questionnaires must be completed and submitted before any award of contract may be made or before approval is given for a proposed subcontractor. Non-compliance with these submission requirements may result in the disqualification of the bid, disapproval of a subcontractor, subsequent withdrawal of approval for the use of an approved subcontractor, or the cancellation of the contract after its award.

(B) Submission: Vendex Questionnaires must be submitted directly to the Mayor's Office of Contract Services, ATTN: Vendex, 253 Broadway, 9th Floor, New York, New York 10007. In addition, the bidder must submit a Confirmation of Vendex Compliance to the agency. A form for this confirmation is set forth in the Bid Booklet.

(C) Obtaining Forms: Vendex Questionnaires, as well as detailed instructions, may be obtained at www.nyc.gov/vendex. The bidder may also obtain Vendex forms and instructions by contacting the

Agency Chief Contracting Office or the contract person for this contract.

25. Complaints About the Bid Process

The New York City Comptroller is charged with the audit of contracts in New York City. Any vendor who believes that there has been unfairness, favoritism or impropriety in the bid process should inform the Comptroller, Office of Contract Administration, One Centre Street, Room 835, New York, New York; telephone number (212)669-2797.

26. Bid, Performance and Payment Security

(A) Bid Security: Each bid must be accompanied by bid security in an amount and type specified in Attachment 1 (page A-1 of the Bid Booklet). The bid security shall assure the City of New York of the adherence of the bidder to its proposal, the execution of the Contract, and the furnishing of Performance and Payment Bonds by the bidder, if required in Attachment 1. Bid security shall be returned to the bidder as follows:

(1) Within ten (10) days after the bid opening, the Comptroller will be notified to return the deposits of all but the three (3) lowest bidders. Within five (5) days after the award, the Comptroller will be notified to return the deposits of the remaining two unsuccessful bidders.

(2) Within five (5) days after the execution of the Contract and acceptance of the Contractor's bonds, the Comptroller will be notified to return the bid security of the successful bidder or, if performance and payment bonds are not required, only after the sum retained under Article 21 of the Contract equals the amount of the bid security.

(3) Where all bids are rejected, the Comptroller will be notified to return the deposit of the three (3) lowest bidders at the time of rejection.

(B) Performance and Payment Security: Performance and Payment Security must be provided in an amount and type specified in Attachment 1 (page A-1 of the Bid Booklet). The performance and payment security shall be delivered by the contractor prior to or at the time of execution of the Contract. If a contractor fails to deliver the required performance and payment security, its bid security shall be enforced, and an award of Contract may be made to the next lowest responsible and responsive bidder, or the contract may be rebid.

(C) Acceptable Types of Security: Acceptable types of security for bids, performance, and payment shall be limited to the following:

(1) a one-time bond in a form satisfactory to the City;
(2) a bank certified check or money order;
(3) obligations of the City of New York; or
(4) other financial instruments as determined by the Office of Construction in consultation with the Comptroller.

Whenever the successful bidder deposits obligations of the City of New York as performance and payment security, the Comptroller may sell and use the proceeds thereof for any purpose for which the principal or surety on such bond would be liable under the terms of the Contract. If the money is deposited with the Comptroller, the successful bidder shall not be entitled to receive interest on such money from the City.

(D) Form of Bonds: Security provided in the form of bonds must be prepared on the form of bonds authorized by the City of New York. Forms for bid, performance, and payment bonds are included in the Invitation for Bids Documents. Such bonds must have as surety thereunder such surety company or companies as are: (I) approved by the City of New York; (2) authorized to do business in the State of New York, and (3) approved by the Department of the Treasury of the United States. Premiums for any required bonds must be included in the base bid.

The bidder is advised that submission of a bid bond where the surety on such bond fails to meet the criteria set forth herein, shall result in the rejection of the bid as non-responsive.

The Department of the Treasury of the United States advises that information concerning approved surety companies may be obtained as follows: (1) from the Government Printing Office at 202-512-1800; (2) through the Internet at http://www.fms.treas.gov/c570/index.html, and (3) through a computerized public bulletin board, which can be accessed by using your computer modem and dialing 202-874-6887.

(E) Power of Attorney: Attorneys in fact who sign bid, performance, or payment bonds must file with each bond a certified copy of their power of attorney to sign said bonds.

27. Failure to Execute Contract

In the event of failure of the successful bidder to execute the Contract and furnish the required security within ten (10) days after notice of the award of the Contract, the deposit of the successful bidder or so much thereof as shall be applicable to the amount of the award made shall be retained by the City, and the successful bidder shall be liable for and hereby agrees to pay on demand the difference between the price bid and the price for which such Contract shall be subsequently awarded, including the cost of any required reletting and less the amount of such deposit. No plea of mistake in such accepted bid shall be available to the bidder for the recovery of the deposit or as a defense to any action based upon such accepted bid. Further, should the bidder's failure to comply with this Section cause any funding agency, body or group (Federal, State, City, Public, Private, etc.) to terminate, cancel or reduce the funding on this project, the bidder in such event shall be liable also to the City for the amount of actual funding withdrawn by such agency on this project, less the amount of the forfeited deposit.

28. Bidder Responsibilities and Qualifications

(A) Bidders must include with their bids all information necessary for a determination of bidder responsibility, as set forth in the Specifications.

(B) The Agency may require any bidder or prospective bidder to furnish all books of account, records, vouchers, statements or other information concerning the bidder's financial status for examination as may be required by the Agency to ascertain the bidder's responsibility and capability to perform the Contract. If required, a bidder must also submit a sworn statement setting forth such information as the Agency may require concerning present and proposed plant and equipment, the personnel and qualifications of his working organizations, prior experience and performance record.

(C) Oral Examination on Qualifications: In addition thereto, and when directed by the Agency, the bidder, or a responsible officer, agent or employee of the bidder, must submit to an oral examination to be conducted by the Agency in relation to his proposed tentative plan and schedule of

operations, and such other matters as the Agency may deem necessary in order to determine the bidder's ability and responsibility to perform the work in accordance with the Contract. Each person so examined must sign and verify a stenographic transcript of such examination noting thereon such corrections as such person may desire to make.

(D) If the bidder fails or refuses to supply any of the documents or information set forth in paragraph (B) hereof or fails to comply with any of the requirements thereof, the Agency may reject the bid.

29. Employment Report

In accordance with Executive Order No. 50 (1980) as modified by Executive Order 108 (1986), the filing of a completed Employment Report (ER) is a requirement of doing business with the City of New York for construction contractors with contracts of $1,000,000 or more and subcontractors with construction subcontracts of $750,000 or more. The required forms and information are included in the Bid Booklet.

30. Labor Law Requirements

(A) General: The successful bidder will be required to comply strictly with all Federal, State and local labor laws and regulations.

(B) New York State Labor Law: This Contract is subject to New York State Labor Law Section 220, which requires that construction workers on the site be paid prevailing wages and supplements. The Contractor is reminded that all wage provisions of this Contract will be enforced strictly and failure to comply will be considered when evaluating performance. Noncompliance may result in the contractor being debarred by the City from future contracts. Complaints filed with the Comptroller may result in decisions which may debar a contractor from bidding contracts with any state governmental entity and other political subdivisions.

(C) Records: The Contractor is expected to submit accurate payroll reports and other required documents and verify attendance and job classifications being utilized in compliance with the law, Contract provisions and agency procedures.

31. Insurance

(A) Bidders are advised that the insurance requirements contained herein are regarded as material terms of the Contract. As required by Article 22 of the Contract, the contractor must effect and maintain with companies licensed and authorized to do business in the State of New York, the types of insurance set forth therein, when required by and in the amounts set forth in Schedule A of the General Conditions. Such required insurance must be provided from the date the contractor is ordered to commence work and up to the date of final acceptance of all required work.

(B) The contractor must, within ten days of receipt of the notice of award, submit the following insurance documentation: (a) original certificate of insurance for general liability in the amount required by Schedule A of the General Conditions, and (b) original certificates of insurance or other proof of coverage for workers' compensation and disability benefits, as required by Section 57 of the New York State Workers' Compensation Law and Section 220 of the Disability Benefits Law.

32. Lump Sum Contracts

(A) Comparison of Bids: Bids on Lump Sum Contracts will be compared on the basis of the lump sum price bid, adjusted for alternate prices bid, if any.

(B) Lump Sum Bids for "General Construction Work" which include excavation shall include all necessary excavation work defined in the Specifications as being included in the lump sum bid. The bidder shall also bid a unit price for the additional cost of excavating material which is defined in the Specifications as excavation for which additional payment will be made. The total estimated additional cost of removing such material will be taken as the quantity set forth in the Engineer's Estimate multiplied by the unit price bid. This total estimated cost of additional excavation shall be added to the lump sum bid for the General Construction Work for the purpose of comparing bids to determine the low bidder.

(C) Variations from Engineer's Estimate: The Engineer's Estimate of the quantity of excavation for which additional payment will be made is approximate only and is given solely to be used as a uniform basis for the comparison of bids and such estimate is not to be considered as part of this contract. The quantities actually required to complete the contract work may be more or less than the quantities in the Engineer's Estimate and, if so, no action for damages or for loss of profits shall accrue to the contractor by reason thereof.

33. Unit Price Contracts

(A) Comparison of Bids: Bids on Unit Price Contracts will be compared on the basis of a total estimated price, arrived at by taking the sum of the estimated quantities of such items, in accordance with the Engineer's Estimate of Quantities set forth in the Bid Schedule, multiplied by the corresponding unit prices, and including any lump sum bids on individual items.

(B) Variations from Engineer's Estimate: Bidders are warned that the Engineer's Estimate of Quantities on the various items of work and materials is approximate only, given solely to be used as a uniform basis for the comparison of bids, and is not be considered part of this contract. The quantities actually required to complete the contract work may be less or more than so estimated, and if so, no action for damages or for loss of profits shall accrue to the contractor by reason thereof.

(C) Overruns: The terms and conditions applicable to overruns of unit price items are set forth in Article 26 of the Contract.

34. Excise Tax

Bidders are referred to the Specifications for information on Federal Excise Tax exemptions.

35. Licenses and Permits

The successful bidder will be required to obtain all necessary licenses and permits necessary to perform the work.

36. Multiple Prime Contractors

If more than one prime contractor will be involved on this project, all contractors are required to examine the Invitation for Bid packages for all other parts of the project.

37. Locally Based Enterprise Requirements (LBE)

This Contract is subject to the requirements of Administrative Code, Section 6-108.1, and the regulations promulgated thereunder. No construction contract will be awarded unless and until these requirements have been complied with in their entirety. The bidder is advised of the provisions set forth below, as well as the provisions with respect to the Locally Based Enterprise Program contained in Article 67 of the Contract. The contractor is advised that:

(A) If any portion of the Contract is subcontracted, not less than ten percent of the total dollar amount of the contract shall be awarded to locally based enterprises ("LBEs"); except, where less than ten percent of the total dollar amount of the Contract is subcontracted, such lesser percentage shall be so awarded.

(B) No contractor shall require performance and payment bonds from LBE subcontractors.

(C) No Contract shall be awarded unless the contractor first identifies in its bid:

(1) the percentage, dollar amount and type of work to be subcontracted; and
(2) the percentage, dollar amount and type of work to be subcontracted to LBEs.

(D) Within ten calendar days after notification of low bid, the apparent low bidder shall submit an "LBE Participation Schedule" to the contracting agency. If such schedule does not identify sufficient LBE subcontractors to meet the requirements of Administrative Code Section 6-108.1, the apparent low bidder shall submit documentation of its good faith efforts to meet such requirements.

(1) The "LBE Participation Schedule" shall include:

(a) the name and address of each LBE that will be given a subcontract,
(b) the percentage, dollar amount and type of work to be subcontracted to the LBE, and
(c) the dates when the LBE subcontract work will commence and end.

(2) The following documents shall be attached to the "LBE Participation Schedule":

(a) verification letters from each subcontractor listed in the "LBE Participation Schedule" stating that the LBE will enter into a formal agreement for work,
(b) certification documents of any proposed LBE subcontractor which is not on the LBE certified list, and
(c) copies of the certification letter of any proposed subcontractor which is an LBE.

(3) Documentation of good faith efforts to achieve the required LBE percentage shall include as appropriate but not limited to the following:

(a) attendance at prebid meetings, when scheduled by the agency, to advise bidders of contract requirements;

(b) advertisement where appropriate in general circulation media, trade association publications and small business media of the specific subcontracts that would be at least equal to the percentage goal for LBE utilization specified by the contractor;

(c) written notification to association of small, minority and women contractors soliciting specific subcontractors;

(d) written notification by certified mail to LBE firms that their interest in the contract is solicited for specific work items and their estimated values;

(e) demonstration of efforts made to select portions of the work for performance by LBE firms in order to increase the likelihood of achieving the stated goal;

(f) documented efforts to negotiate with LBE firms for specific subcontracts, including at a minimum:
(i) The names, address and telephone numbers of LBE firms that are contacted;
(ii) A description of the information provided to LBE firms regarding the plans and specifications for portions of the work to be performed;
(iii) Documentation showing that no reasonable price can be obtained from LBE firms;
(iv) A statement of why agreements with LBE firms were not reached;

(g) a statement of the reason for rejecting any LBE firm which the contractor deemed to be unqualified; and

(h) documentation of efforts made to assist the LBE firms contacted that needed assistance in obtaining required insurance.

(E) Unless otherwise waived by the Commissioner with the approval of the Office of Economic and Financial Opportunity, failure of a proposed contractor to provide the information required by paragraphs (C) and (D) above may render the bid non-responsive and the Contract may not be awarded to the bidder. If the contractor states that it will subcontract a specific portion of the work, but can demonstrate despite good faith efforts it cannot achieve its required LBE percentage for subcontracted work until after award of Contract, the Contract may be awarded, subject to a letter of compliance from the contractor stating that it will comply with Administrative Code Section 6-108.1 and subject to approval by the Commissioner. If the contractor has not met its required LBE percentage prior to award, the contractor shall demonstrate that a good faith effort has been made subsequent to award to obtain LBEs on each subcontract until its meets the required percentage.

(F) When a bidder indicates prior to award that no work will be subcontracted, no work may be subcontracted without the prior written approval of the Commissioner, which shall be granted only if the contractor in good faith seeks LBE subcontractors at least six weeks prior to the start of work.

(G) The contractor may not substitute or change any LBE which was identified prior to award of the contract without the written permission of the Commissioner. The contractor shall make a written application to the Commissioner for permission to make such substitution or change, explaining why the contractor needs to change its LBE subcontractor and how the contractor will meet its LBE subcontracting requirement. Copies of such application must be served on the originally identified LBE by certified mail return receipt requested, as well as the proposed substitute LBE. The Commissioner shall determine whether or not to grant the contractor's request for substitution.

38. Bid Submission Requirements

The Bid Submission Requirements are set forth on page 2 of the Bid Booklet.

39. Comptroller's Certificate

This Contract shall not be binding or of any force unless it is registered by the Comptroller in accordance with Section 328 of the City Charter and the Procurement Policy Board Rules. This Contract shall continue in force only after annual appropriation of funds by the City of New York and certification as hereinabove set forth.

40. Procurement Policy Board Rules

This Invitation For Bids is subject to the Rules of the Procurement Policy Board of the City of New York. In the event of a conflict between said Rules and a provision of this Invitation For Bids, the Rules shall take precedence.

41. DDC Safety Requirements

The DDC Safety Requirements apply to the work to be performed pursuant to the Contract. The DDC Safety Requirements are set forth on the following pages.

CITY OF NEW YORK

DEPARTMENT OF DESIGN AND CONSTRUCTION

SAFETY REQUIREMENTS

THE DDC SAFETY REQUIREMENTS INCLUDE THE FOLLOWING SECTIONS:

I. POLICY ON SITE SAFETY .....

II. PURPOSE .....

III. DEFINITIONS .....

IV. RESPONSIBILITIES .....

V. SAFETY QUESTIONNAIRE .....

VI. SAFETY PROGRAM AND SITE SAFETY PLAN .....

VII. KICK-OFF/PRE-CONSTRUCTION MEETINGS AND SAFETY REVIEW .....

VIII. EVALUATION DURING WORK IN PROGRESS .....

IX. SAFETY PERFORMANCE EVALUATION .....

I. POLICY ON SITE SAFETY

The City of New York Department of Design and Construction (DDC) is committed to a policy of injury and illness prevention and risk management for construction work that will ensure the safety and health of the workers engaged in the projects and the protection of the general public. Therefore, it is DDC's policy that work carried out by Contractors on DDC jobsites must, at a minimum, comply with applicable federal, state and city laws, rules and regulations, including without limitation:

- U. S. Department of Labor 29 Code of Federal Regulations (CFR) Part 1926 and applicable Sub-parts of Part 1910 – U.S. Occupational Safety and Health Administration (OSHA) including, but not limited to "Respiratory Protection" (29 CFR 1910.134), "Permit-Required Confined Spaces" (29 CFR 1910.146), and "Hazard Communication" (29 CFR 1910.1200);
- New York State Department of Labor Industrial Code Rule 23 – Protection in Construction, Demolition and Excavation;
- New York City Construction Codes, Title 28
- NYC Department of Transportation Title 34 Chapter 2 – Highway Rules
- New York State Department of Labor Industrial Code Rule 753
- NYC Local Law No. 113 (2005) Noise Control Code

In addition, all regulations promulgated by the NYC Department of Transportation, including requirements for Maintenance and Protection of Traffic (MPT), are applicable when contained in contract specifications. While MPT is a significant component of work in our Infrastructure Division, it does not supersede or exempt Contractors from complying with other applicable health and safety standards (for example, excavating and trenching standards, operation of heavy equipment and compliance with City environmental and noise regulations).

II. PURPOSE

The purpose of this policy is to ensure that Contractors perform their work and supervise their employees in accordance with all applicable federal, state and city rules and regulations. Further, Contractors will be expected to minimize or eliminate jobsite and public hazard, through a planning, inspection, auditing and corrective action process. The goal is to control risks so that injuries, illnesses and accidents to contractors' employees, DDC employees and the general public, as well as damage to city-owned and private property, are reduced to the lowest level feasible.

III. DEFINITIONS

Agency Chief Contracting Officer (ACCO): The ACCO shall mean the person delegated authority by the Commissioner to organize and supervise the procurement activity of subordinate Agency staff in conjunction with the CCPO.

Competent Person: As defined by OSHA, an individual who is capable of identifying existing and predictable hazards in the surroundings or working conditions that are unsanitary, hazardous, or dangerous to employees or the general public, and who has authorization to take prompt corrective measures to eliminate them.

Construction Safety Auditor: A representative of the QACS Construction Safety Unit who provides inspection and assessment services to enhance health and safety on all DDC construction projects. The activities of the Construction Safety Auditor include performing site surveys, reviewing health and safety plans, reviewing construction permits, and rendering technical advice and assistance to DDC Resident Engineers and Project Managers.

Construction Safety Unit: A part of QACS within the Division of Technical Support that assesses contractor safety on DDC jobsites and advises responsible parties of needed corrective actions.

Construction Superintendent: A representative of the contractor responsible for overseeing performance of the required construction work. This individual must engage in sound construction practices, and is responsible to maintain a safe work site. In the case of a project involving the demolition, alteration or new construction of buildings, the Construction Superintendent must be licensed by the NYC Department of Buildings.

Contractor: For purposes of these Safety Requirements, the term "Contractor" shall mean any person or entity that enters into a contract for the performance of construction work on a DDC project. The term "Contractor" shall include any person or entity which enters into any of the following types of contracts: (1) a prime construction contract for a specific project, (2) a prime construction contract using the Job Order Contracting System ("JOCS Contract"), and (3) a subcontract with a CM/Builder ("First Tier Subcontract").

Director - Quality Assurance and Construction Safety (QACS): Responsible for the operations of the QACS Construction Safety Unit and the DDC Site Safety management programs.

Job Hazard Assessment (JHA): A process of identifying site-specific hazards that may be present during construction and establishing the means and methods to reduce or eliminate those hazards.

Jobsite Safety Coordinator: A person designated by the Contractor to be onsite during all activities. This individual shall have received, at a minimum, the OSHA 10-hour construction safety program. Other examples of acceptable training are the 30-hour OSHA Safety and Health Standards for the Construction Industry training program (OSHA 510) or a degree/certificate in a safety and health from a college-level curriculum. This person does not necessarily have to be dedicated full-time to site safety, but must have sufficient experience and authority to undertake corrective action and must qualify to be a competent person. For certain projects, as defined in NYC Construction Codes – Title 28, this person may be required to have a Site Safety Manager's License issued by the NYC DOB.

Qualified Person: As defined by OSHA, an individual who, by possession of a recognized degree, certificate, license or professional standing, or who by extensive knowledge, training, and experience, has successfully demonstrated his or her ability to solve problems relating to the subject matter, the work, or the project. Qualified Persons are required under regulation to address issues pertaining, but without limit, to fall protection, scaffold design and trenching and shoring, among others.

Resident Engineer (RE) / Construction Project Manager (CPM): Representative of the Commissioner duly designated by the Commissioner to be his/her representative at the site of the work. (The RE/CPM may be a third-party consultant, including a CM, retained by DDC.)

Safety Program: Established by the Contractor that covers all operations of that Contractor and establishes the Contractor's overall safety policy, regulatory compliance plan and minimum safety standards. The Safety Program must be submitted prior to the commencement of work at the site and is subject to review and acceptance by the Construction Safety Unit.

Safety Questionnaire: Used by DDC to evaluate Contractor's current and past safety performance. It is required to be completed by all Contractors initially when submitting bids for Construction work, or when being pre-qualified and updated annually or as requested by the DDC.

Site Safety Plan: A site-specific safety plan developed by the Contractor for a specific project. The Site Safety Plan must identify hazards associated with the project, and include specific safety precautions and training appropriate and necessary to complete the work. The Site Safety Plan must be submitted prior to the commencement of work at the site and is subject to review and acceptance by the Construction Safety Unit.

Unsafe or Unhealthy Condition: A condition that could be potentially hazardous to the health and safety of personnel or the public, and/or damaging to equipment, machinery, property or the environment.

Weekly Safety Meetings: Weekly documented jobsite safety meetings, given to all jobsite personnel by contractor, with the purpose of discussing general safety topics and job specific requirements encountered at the DDC work site.

IV. RESPONSIBILITIES

All persons who manage, perform, and provide support for construction projects shall conduct operations in compliance with the requirements identified in this Policy and all applicable governing regulatory agency requirements and guidelines pertaining to safety in construction.

A. Resident Engineer / Construction Project Manager / Construction Manager

- Monitors the issuance of safety- related permits, approvals and drawings and maintains copies on site.
- Monitors construction-related work activities to confirm that they are conducted in accordance with DDC policies and all applicable regulations that pertain to construction safety.
- Maintains documentation and periodically attends weekly safety meeting.
- Notifies the Construction Safety Unit and the ACCO's Insurance and Risk Management Unit of project- related accidents and emergencies, as per DDC's Construction Safety Emergency Protocol.
- Gathers facts related to all accidents and prepares DDC Accident Reports.
- Notifies the Construction Safety Unit of outside regulatory agency inspections and forwards a copy of the inspection report within three days of its receipt.
- Monitors the conditions at the site for conformance with the Site Safety Plan and DDC construction documents.
- Notifies the contractor and DDC in the event that any condition or activity exists that is not in compliance with the Site Safety Plan, applicable federal, state or local codes or any condition that presents a potential risk of injury to the public or workers or possible damage to property.
- Notifies DDC of any emergency condition and directs the contractor to provide such labor, materials, equipment and supervision to abate such conditions.
- Reports gross safety violations to the Construction Safety Unit immediately.

B. Contractors

- Complete a Safety Questionnaire and submit with its bid or as part of a pre-qualification package.
- Provide a Written Job Hazard Assessment (JHA) that identifies expected safety issues of the work to be performed. JHA shall be included with the Site Safety Plan submitted by the contractor.
- Submit a Site Safety Plan and Safety Program within 15 days of issuance of the Notice to Proceed, or as otherwise directed. The Site Safety Plan and Safety Program are subject to review and acceptance by the Construction Safety Unit prior to the commencement of work at the site. The Site Safety Plan shall be revised and updated as necessary.
- Ensure that all employees are aware of the hazards associated with the project through formal and informal training and/or other communications. Conduct and document weekly safety meetings for the duration of the project. Documentation to be provided to the RE/CPM/CM on a monthly basis.
- Name a Construction Superintendent, if required.
- Name a Job Site Safety Coordinator. The Contractor will be required to identify the Job Site Safety Coordinator in the Site Safety Plan.
- Comply with all mandated federal, state and local safety and health rules and regulations.
- Comply with all provisions of the Site Safety Plan.
- As part of the Site Safety Plan, prepare a site specific MPT (if not otherwise provided in the contract documents) and comply with all of its provisions.

- Conduct and document site-specific safety orientation for Contractor personnel to review the hazards associated with the project as identified in the Site Safety Plan and the specific safety procedures and controls that will be used to protect workers, the general public and property. The Job Site Safety Coordinator will conduct this training prior to mobilization and provide documentation to the RE/CPM/CM.
- Provide, replace and adequately maintain at or around the project site, suitable and sufficient signage, lights, barricades and enclosures (fences, sidewalk sheds, netting, bracing, etc.).
- Report unsafe conditions or hazards to the DDC RE/CPM/CM as soon as practical, but no more than 24 hours after discovery, and take action to remove or abate such conditions.
- Report any accident involving injuries to workers or the general public, as well as property damage, to the DDC RE/CPM/CM within two (2) hours.
- Notify the DDC RE/CPM/CM within two (2) hours of the start of an inspection by any regulatory agency personnel, including OSHA.
- Maintain all records pertaining to all required compliance documents and accident and injury reports.
- Respond to DDC recommendations on safety, which shall in no way relieve the Contractor of its responsibilities for safety on the project. The Contractor has sole responsibility for safety.

V. SAFETY QUESTIONNAIRE

DDC requires that all Contractors provide information regarding their current and past safety and environmental performance and programs. This will be accomplished by the use of the DDC Safety Questionnaire. As a part of the bid submittal package, the contractor must submit a completed DDC Safety Questionnaire listing their workers' compensation experience modification rating and OSHA Incidence Rates for the three (3) years prior to the date of the bid opening. DDC may request a Contractor to update its Questionnaire at any time or to provide more detailed information. The Contractor must provide the requested update within 30 days.

The following criteria will be used by DDC in reviewing the Contractor's responsibility, which will be based on the information provided on the questionnaire:

Criteria 1: OSHA Injury and Illness Rates (I&IR) are no greater than the average for the industry (based on the most current Bureau of Labor Statistics data for the Contractors SIC code); and
Criteria 2: Insurance workers compensation Experience Modification Rate (EMR) equal to or less than 1.0; and
Criteria 3: Any willful violations issued by OSHA or NYC DOB within the last three years; and
Criteria 4: A fatality (worker or member of public) experienced on or near Contractor's worksite within the last three (3) years; and
Criteria 5: An unacceptable rating by QACS based on past performance on DDC projects; and
Criteria 6: Contractor has in place an acceptable corporate safety program and its employees shall have completed all documented relative safety training; and
Criteria 7: Contractor shall provide OSHA Injury Records (currently OSHA 300 Log) for the last three (3) years.

If the Contractor fails to meet the basic criteria listed above, the Construction Safety Unit may request, through the ACCO, more detail concerning the Contractor's safety experience. DDC may request the Contractor to provide copies of, among other things, OSHA records, OSHA and DOB citations, EPA citations and written Safety Programs.

VI. SAFETY PROGRAM AND SITE SAFETY PLAN

Within fifteen (15) days of issuance of the Notice to Proceed, or as otherwise directed, the Contractor shall submit the following: (1) Safety Program, and (2) Site Safety Plan. The Safety Program shall set forth the Contractor's overall safety policy, regulatory compliance plan and minimum safety standard, and the Site Safety Plan shall identify hazards associated with the project, and include specific safety precautions and training appropriate and necessary to complete the work. The Safety Program and the Site Safety Plan are subject to review and acceptance by the Construction Safety Unit prior to the commencement of work at the site. Failure by the contractor to submit an acceptable Site Safety Plan and Safety Program shall be grounds for default.

The Site Safety Plan shall apply to all Contractor and subcontractor operations, and shall have at a minimum, the following elements. Each element shall be described in a separate section in the written document. It may be necessary to modify the basic format for certain unique or high-risk projects (such as tunnels or high-rise construction). The basic elements are as follows:

1. Responsibility and Organization: Identify the person or persons with authority and responsibility for implementing the Site Safety Plan. Provide an organization chart and define levels of authority and responsibility. Identify the Competent Person, the Construction Superintendent (if required), the Job Safety Coordinator and the Qualified Person required for this project.

2. Communication: Establish a system for communicating with employees and subcontractors on matters relating to worker and public safety and health and environmental protection, including provisions designed to encourage employees to inform the employer of hazards at the worksite without fear of reprisal. An emergency response notification protocol is to be established that also includes after hours contact numbers. The plan must also include provisions for weekly safety meetings held by the Job Site Safety Coordinator.

3. Job Hazard Assessment: A written document submitted by the contractor, used to identify expected job hazards and public safety risks and state the specific means and methods to reduce, control or eliminate those hazards. This part of the Site Safety Plan must also include how on-going evaluations of those risks and hazards will be carried out, including plans for periodic inspections to identify unsafe conditions, work practices and public safety hazards.

4. Accident/Exposure Investigation: Establish a procedure to investigate and report occupational and public injury or illness, property damage, vehicle accidents or other mishaps.

5. Hazard Correction: Establish means, methods and/or procedures for correcting unsafe or unhealthy conditions that might be exposing both the public and workers to hazards. Corrective actions must be taken immediately when observed or discovered. Should an imminent hazard exist which cannot be immediately abated without endangering employees, the public and/or property, remove or restrict all exposed persons from the area except those necessary to correct the existing condition. Employees necessary to correct the hazardous condition shall be provided the necessary safeguards. When corrective actions cannot be taken immediately, temporary measures should be taken until such time permanent measures are taken to eliminate the potential risks or hazards

6. Training: Describe site-specific hazard training programs. In addition to the required safety orientation, additional site specific training, in the form of required weekly safety meetings, will be required. Contractors must also initiate training when: a) new employees are hired; b) employees are given new job assignments for which training has not been previously received; c) new substances, processes, procedures or equipment are introduced that might represent a new public or worker hazard; d) the employee is made aware of a new or previously unrecognized hazard; e) new supervisors are assigned to familiarize themselves with the safety and health hazards to which employees under their immediate direction and control may be exposed; and f) after a jobsite incident or accident has occurred.

7. Recordkeeping: Establish procedures to maintain records of scheduled and periodic inspections, weekly safety meetings, and training records. Updated records shall be maintained at the jobsite, accessible to the Construction Safety Auditors and/or Quality Assurance Auditors/RE/CPM, and retained in accordance with DDC policy.

The most critical component of the Site Safety Plan is the Job Hazard Assessment section. This section must address specific hazards that are anticipated throughout the project. Each Site Safety Plan must address, at a minimum:

- Public and pedestrian safety
- Fall protection
- Electrical hazards
- Scaffolding
- Fire protection
- Emergency notification & response
- Housekeeping / debris removal
- Dust control
- Maintenance and protection of traffic
- Trenching and excavating
- Heavy equipment operations
- Material / equipment storage
- Environmental contamination
- Sheeting and shoring
- Alcohol and Drug Abuse Policy

The following additional hazards must be addressed, if applicable, based on the contract safety specifications and/or the results of the JHA (the list is not all-inclusive):

- Basic Personal Protective Equipment
- Compressed Air
- Compressed Gas Cylinders
- Cranes, Derricks and Hoists
- Demolition
- Electrical safety
- Excavations and Trenching
- Fall Protection – Floor openings/Stairways
- Fall Protection – Guardrails Toe boards etc
- Fall Protection – Leading Edge
- Fall Protection – Personal Fall Protection Devices
- Fire Protection and Fire Prevention
- Hazard Communication (RIGHT TO KNOW)
- Hazardous Energy & Lock Out / Tag Out
- Housekeeping/ Sanitation
- Maintenance and Protection of Traffic (MPT)
- Man Lifts /Aerial Lifts
- Marine Operations
- Motor Vehicle Safety
- Overhead Power lines
- Permit Required Confined Space
- Portable Ladders
- Powered Actuated Tools
- Powered Material Handling Equipment
- Scaffolds – Mobile
- Scaffolds – Stationary
- Scaffolds – Suspended
- Slings
- Steel Erection

- Welding and Cutting (Hot Work)
- Airborne Contaminants – Particulates – General
- Asbestos
- Blood borne Pathogens
- Hearing Protection
- Lead in Construction
- Mercury in Construction
- PCB's
- Respiratory Protection
- Silica
- Thermal Stress
- West Nile Virus
- Rodents and Vermin
- Noise Mitigation Plan

Certain DDC programs, such as Job Order Contracting System (JOCS), may not necessarily require Site Safety Plans. The JOCS contractor will be required to submit a Safety Program. In addition, certain DDC Operating Units may establish program or client-specific safety requirements. The contractor's Site Safety Plan must address such program or client specific safety requirements.

VII. KICK-OFF MEETINGS/PRE-CONSTRUCTION AND SAFETY REVIEW

As part of the construction kick-off meeting, a Site Safety Plan review will be part of the agenda. A QACS representative will participate in this meeting with the contractor prior to the start of the project for the purpose of:

A. Reviewing the safety issues detailed in the contract.
B. Reviewing the Site Safety Plan.
C. Reviewing any new issues or information that was not previously addressed.
D. Discussing planned inspections and audits of the site by DDC personnel.

VIII. EVALUATION DURING WORK IN PROGRESS

The Contractor's adherence to these Safety Requirements will be monitored throughout the project. This will be accomplished by the following:

A. Use of a safety checklist by a representative of the Construction Safety Unit or other designated DDC representative or Consultant during regular, unannounced inspections of the job site. Field Exit Conferences will be held with the RE/CPM, Contractor Superintendents or Safety Representatives.

B. The RE/CPM will continually monitor the safety and environmental performance of the contractor's employees and work methods. Deficiencies shall be brought to the attention of the contractor's representative on site for immediate correction. The DDC representative will maintain a written record of these deficiencies and forward them to the Construction Safety Unit on a weekly basis. Any critical deficiencies shall be immediately reported to QACS phone# (718) 391-1624 or (718) 391-1911.

C. If the Contractor's safety performance during the project is not up to DDC standards (safety performance measure, accident/incident rate, etc.) the Director- QACS, or designee will meet with the Contractor's safety representative, the DDC project manager, the RE/CPM, or the DDC Environmental Specialist (if environmental issues are involved). The purpose of this meeting is to 1) determine the level of non-compliance; 2) explain and clarify the safety/environmental provisions; 3) agree on a future course of action to correct the deficiencies.

D. If the deficiencies continue to occur with inadequate attention by the contractor, this shall, among other remedies available, be grounds for default.

E. The contractor shall inform the Construction Safety Unit and ACCO Insurance and Risk Management Unit of all medical injuries or illnesses that require doctors' treatment resulting from an on-the-job incident within 24 hours of the occurrence. The Construction Safety Unit shall also be immediately informed of all fatalities, catastrophic accidents with more than one employee hospitalized, any injuries to members of the general public and major equipment damage (e.g., property damage, equipment rollovers, loads dropped from crane). QACS shall maintain a record of all contractor injuries and illnesses during the project and provide regular reports to the Agency.

F. The Construction Safety Unit shall be immediately notified at the start of any NYS-DOL/ NYC-COSH/ OSHA/ EPA inspections. The Director of Quality Assurance & Construction Safety shall maintain a log of all contractor OSHA/EPA inspections and citations during the project.

IX. SAFETY PERFORMANCE EVALUATION

The contractor's safety record, including all DDC inspection results, will be considered as part of the Contractor's performance evaluation at the conclusion of the project. Poor safety performance during the course of the project shall be a reason to rate a Contractor unsatisfactory which will be reflected in the City's Vendex system and will be considered for future procurement actions as set forth in the City's Procurement Policy Board Rules.

(NO TEXT ON THIS PAGE)

CITY OF NEW YORK

STANDARD CONSTRUCTION CONTRACT

DECEMBER 2013

(NO TEXT ON THIS PAGE)

CITY OF NEW YORK
STANDARD CONSTRUCTION CONTRACT

TABLE OF CONTENTS

CHAPTER I
THE CONTRACT AND DEFINITIONS

ARTICLE 1.	THE CONTRACT	1
ARTICLE 2.	DEFINITIONS	1

CHAPTER II
THE WORK AND ITS PERFORMANCE

ARTICLE 3.	CHARACTER OF THE WORK	4
ARTICLE 4.	MEANS AND METHODS OF CONSTRUCTION	4
ARTICLE 5.	COMPLIANCE WITH LAWS	5
ARTICLE 6.	INSPECTION	10
ARTICLE 7.	PROTECTION OF WORK AND OF PERSONS AND PROPERTY; NOTICES AND INDEMNIFICATION	11

CHAPTER III
TIME PROVISIONS

ARTICLE 8.	COMMENCEMENT AND PROSECUTION OF THE WORK	12
ARTICLE 9.	PROGRESS SCHEDULES	12
ARTICLE 10.	REQUESTS FOR INFORMATION OR APPROVAL	13
ARTICLE 11.	NOTICE OF CONDITIONS CAUSING DELAY AND DOCUMENTATION OF DAMAGES CAUSED BY DELAY	13
ARTICLE 12.	COORDINATION WITH OTHER CONTRACTORS	17
ARTICLE 13.	EXTENSION OF TIME FOR PERFORMANCE	18
ARTICLE 14.	COMPLETION AND FINAL ACCEPTANCE OF THE WORK	21
ARTICLE 15.	LIQUIDATED DAMAGES	22
ARTICLE 16.	OCCUPATION OR USE PRIOR TO COMPLETION	22

CHAPTER IV
SUBCONTRACTS AND ASSIGNMENTS

ARTICLE 17.	SUBCONTRACTS	23
ARTICLE 18.	ASSIGNMENTS	25

CITY OF NEW YORK
STANDARD CONSTRUCTION CONTRACT

TABLE OF CONTENTS

CHAPTER V
CONTRACTOR'S SECURITY AND GUARANTY

ARTICLE 19.	SECURITY DEPOSIT	26
ARTICLE 20.	PAYMENT GUARANTEE	26
ARTICLE 21.	RETAINED PERCENTAGE	29
ARTICLE 22.	INSURANCE	29
ARTICLE 23.	MONEY RETAINED AGAINST CLAIMS	35
ARTICLE 24.	MAINTENANCE AND GUARANTY	36

CHAPTER VI
CHANGES, EXTRA WORK AND DOCUMENTATION OF CLAIM

ARTICLE 25.	CHANGES	37
ARTICLE 26.	METHODS OF PAYMENT FOR OVERRUNS AND EXTRA WORK	37
ARTICLE 27.	RESOLUTION OF DISPUTES	40
ARTICLE 28.	RECORD KEEPING FOR EXTRA OR DISPUTED WORK OR WORK ON A TIME & MATERIALS BASIS	44
ARTICLE 29.	OMITTED WORK	45
ARTICLE 30.	NOTICE AND DOCUMENTATION OF COSTS AND DAMAGES; PRODUCTION OF FINANCIAL RECORDS	45

CHAPTER VII
POWERS OF THE RESIDENT ENGINEER, THE ENGINEER OR ARCHITECT AND THE COMMISSIONER

ARTICLE 31.	THE RESIDENT ENGINEER	46
ARTICLE 32.	THE ENGINEER OR ARCHITECT OR PROJECT MANAGER	47
ARTICLE 33.	THE COMMISSIONER	47
ARTICLE 34.	NO ESTOPPEL	48

CHAPTER VIII
LABOR PROVISIONS

ARTICLE 35.	EMPLOYEES	48
ARTICLE 36.	NO DISCRIMINATION	50
ARTICLE 37.	LABOR LAW REQUIREMENTS	52
ARTICLE 38.	PAYROLL REPORTS	57
ARTICLE 39.	DUST HAZARDS	58

TABLE OF CONTENTS

CHAPTER IX
PARTIAL AND FINAL PAYMENTS

ARTICLE 40.	CONTRACT PRICE	58
ARTICLE 41.	BID BREAKDOWN ON LUMP SUM	58
ARTICLE 42.	PARTIAL PAYMENTS	58
ARTICLE 43.	PROMPT PAYMENT	59
ARTICLE 44.	SUBSTANTIAL COMPLETION PAYMENT	59
ARTICLE 45.	FINAL PAYMENT	60
ARTICLE 46.	ACCEPTANCE OF FINAL PAYMENT	61
ARTICLE 47.	APPROVAL BY PUBLIC DESIGN COMMISSION	62

CHAPTER X
CONTRACTOR'S DEFAULT

ARTICLE 48.	COMMISSIONER'S RIGHT TO DECLARE CONTRACTOR IN DEFAULT	62
ARTICLE 49.	EXERCISE OF THE RIGHT TO DECLARE DEFAULT	64
ARTICLE 50.	QUITTING THE SITE	64
ARTICLE 51.	COMPLETION OF THE WORK	64
ARTICLE 52.	PARTIAL DEFAULT	64
ARTICLE 53.	PERFORMANCE OF UNCOMPLETED WORK	65
ARTICLE 54.	OTHER REMEDIES	65

CHAPTER XI
MISCELLANEOUS PROVISIONS

ARTICLE 55.	CONTRACTOR'S WARRANTIES	66
ARTICLE 56.	CLAIMS AND ACTIONS THEREON	66
ARTICLE 57.	INFRINGEMENT	66
ARTICLE 58.	NO CLAIM AGAINST OFFICERS, AGENTS OR EMPLOYEES	67
ARTICLE 59.	SERVICE OF NOTICES	67
ARTICLE 60.	UNLAWFUL PROVISIONS DEEMED STRICKEN FROM CONTRACT	67
ARTICLE 61.	ALL LEGAL PROVISIONS DEEMED INCLUDED	67
ARTICLE 62.	TAX EXEMPTION	67
ARTICLE 63.	INVESTIGATION(S) CLAUSE	69
ARTICLE 64.	TERMINATION BY THE CITY	71
ARTICLE 65.	CHOICE OF LAW, CONSENT TO JURISDICTION AND VENUE	73

TABLE OF CONTENTS

CHAPTER XI (CONT'D)
MISCELLANEOUS PROVISIONS

ARTICLE 66.	**PARTICIPATION IN AN INTERNATIONAL BOYCOTT**	**74**
ARTICLE 67.	**LOCALLY BASED ENTERPRISE PROGRAM**	**74**
ARTICLE 68.	**ANTITRUST**	**75**
ARTICLE 69.	**MACBRIDE PRINCIPLES PROVISIONS**	**75**
ARTICLE 70	**ELECTRONIC FILING/NYC DEVELOPMENT HUB**	**77**
ARTICLE 71.	**PROHIBITION OF TROPICAL HARDWOODS**	**77**
ARTICLE 72.	**CONFLICTS OF INTEREST**	**78**
ARTICLE 73.	**MERGER CLAUSE**	**78**
ARTICLE 74.	**STATEMENT OF WORK**	**78**
ARTICLE 75.	**COMPENSATION TO BE PAID TO CONTRACTOR**	**78**
ARTICLE 76:	**ELECTRONIC FUNDS TRANSFER**	**78**
ARTICLE 77:	**RECORDS RETENTION**	**79**
ARTICLE 78:	**PARTICIPATION BY MINORITY-OWNED AND WOMEN-OWNED BUSINESS ENTERPRISES IN CITY PROCUREMENT**	**79**

SIGNATURES	**87**
ACKNOWLEDGMENT BY CORPORATION	**88**
ACKNOWLEDGMENT BY PARTNERSHIP	**88**
ACKNOWLEDGMENT BY INDIVIDUAL	**88**
ACKNOWLEDGMENT BY COMMISSIONER	**89**
AUTHORITY	**90**
COMPTROLLER'S CERTIFICATE	**90**
MAYOR'S CERTIFICATE	**91**
PERFORMANCE BOND #1	**92**
PERFORMANCE BOND #2	**96**
PAYMENT BOND	**100**

WITNESSETH:

The parties, in consideration of the mutual agreements contained herein, agree as follows:

CHAPTER I
THE CONTRACT AND DEFINITIONS

ARTICLE 1. THE CONTRACT

1.1 Except for titles, subtitles, headings, running headlines, tables of contents and indices (all of which are printed herein merely for convenience), the following, except for such portions thereof as may be specifically excluded, shall be deemed to be part of this Contract:

1.1.1 All provisions required by law to be inserted in this Contract, whether actually inserted or not;

1.1.2 The Contract Drawings and Specifications;

1.1.3 The General Conditions and Special Conditions, if any;

1.1.4 The Contract;

1.1.5 The Information for Bidders; Request for Proposals; Notice of Solicitation and Proposal For Bids; Bid or Proposal, and, if used, the Bid Booklet;

1.1.6 All Addenda issued prior to the receipt of the bids; the Notice of Award; Performance and Payment Bonds, if required; and the Notice to Proceed or the Order to Work.

1.2 Should any conflict occur in or between the Drawings and Specifications, the Contractor shall be deemed to have estimated the most expensive way of doing the Work, unless the Contractor shall have asked for and obtained a decision in writing from the Commissioner of the Agency that is entering into this Contract, before the submission of its bid, as to what shall govern.

ARTICLE 2. DEFINITIONS

2.1 The following words and expressions, or pronouns used in their stead, shall, wherever they appear in this Contract, be construed as follows, unless a different meaning is clear from the context:

2.1.1 **"Addendum"** or **"Addenda"** shall mean the additional Contract provisions and/or technical clarifications issued in writing by the Commissioner prior to the receipt of bids.

2.1.2 **"Agency"** shall mean a city, county, borough or other office, position, department, division, bureau, board or commission, or a corporation, institution or agency of government, the expenses of which are paid in whole or in part from the City treasury.

2.1.3 **"Agency Chief Contracting Officer" (ACCO)** shall mean a person delegated authority by the Commissioner to organize and supervise the procurement activity of subordinate Agency staff in conjunction with the CCPO, or his/her duly authorized representative.

2.1.4 **"Allowance"** shall mean a sum of money which the Agency may include in the total amount of the Contract for such specific contingencies as the Agency believes may be necessary to complete the Work, *e.g.*, lead or asbestos remediation, and for which the Contractor will be paid on the basis of stipulated unit prices or a formula set forth in the Contract or negotiated between the parties provided, however, that if the Contractor is not directed to use the Allowance, the Contractor shall have no right to such money and it shall be deducted from the total amount of the Contract.

2.1.5 **"City"** shall mean the City of New York.

2.1.6 **"City Chief Procurement Officer" (CCPO)** shall mean a person delegated authority by the Mayor to coordinate and oversee the procurement activity of Mayoral agency staff, including the ACCO and any offices which have oversight responsibility for the procurement of construction, or his/her duly authorized representative.

2.1.7 **"Commissioner"** shall mean the head of the Agency that has entered into this Contract, or his/her duly authorized representative.

2.1.8 **"Comptroller"** shall mean the Comptroller of the City of New York.

2.1.9 **"Contract"** or **"Contract Documents"** shall mean each of the various parts of the contract referred to in Article 1 hereof, both as a whole and severally.

2.1.10 **"Contract Drawings"** shall mean only those drawings specifically entitled as such and listed in the Specifications or in any Addendum, or any drawings furnished by the Commissioner, pertaining or supplemental thereto.

2.1.11 **"Contract Work"** shall mean everything required to be furnished and done by the Contractor by any one or more of the parts of the Contract referred to in Article 1, except Extra Work as hereinafter defined.

2.1.12 **"Contractor"** shall mean the entity which executed this Contract, whether a corporation, firm, partnership, joint venture, individual, or any combination thereof, and its, their, his/her successors, personal representatives, executors, administrators, and assigns, and any person, firm, partnership, joint venture, individual, or corporation which shall at any time be substituted in the place of the Contractor under this Contract.

2.1.13 **"Days"** shall mean calendar days, except where otherwise specified.

2.1.14 **"Engineer"** or **"Architect"** or **"Project Manager"** shall mean the person so designated in writing by the Commissioner in the Notice to Proceed or the Order to Work to act as such in relation to this Contract, including a private Architect or Engineer or Project Manager, as the case may be. Subject to written approval by the Commissioner, the Engineer, Architect or Project Manager may designate an authorized representative.

2.1.15 **"Engineering Audit Officer" (EAO)** shall mean the person so designated by the Commissioner to perform responsible auditing functions hereunder.

2.1.16 **"Extra Work"** shall mean Work other than that required by the Contract at the time of award which is authorized by the Commissioner pursuant to Chapter VI of this Contract.

2.1.17 **"Federal-Aid Contract"** shall mean a contract in which the United States (federal) Government provides financial funding as so designated in the Information for Bidders.

2.1.18 **"Final Acceptance"** shall mean final written acceptance of all the Work by the Commissioner, a copy of which shall be sent to the Contractor.

2.1.19 **"Final Approved Punch List"** shall mean a list, approved pursuant to Article 14.2.2, specifying those items of Work to be completed by the Contractor after Substantial Completion and dates for the completion of each item of Work.

2.1.20 **"Law"** or **"Laws"** shall mean the Constitution of the State of New York, the New York City Charter, the New York City Administrative Code, a statute of the United States or of the State of New York, a local law of the City of New York, any ordinance, rule or regulation having the force of law, or common law.

2.1.21 **"Materialman"** shall mean any corporation, firm, partnership, joint venture, or individual, other than employees of the Contractor, who or which contracts with the Contractor or any Subcontractor, to fabricate or deliver, or who actually fabricates or delivers, plant, materials or equipment to be incorporated in the Work.

2.1.22 **"Means and Methods of Construction"** shall mean the labor, materials, temporary structures, tools, plant, and construction equipment, and the manner and time of their use, necessary to accomplish the result intended by this Contract.

2.1.23**"Notice to Proceed" or "Order to Work"** shall mean the written notice issued by the Commissioner specifying the time for commencement of the Work and the Engineer, Architect or Project Manager.

2.1.24 **"Other Contractor(s)"** shall mean any contractor (other than the entity which executed this Contract or its Subcontractors) who or which has a contract with the City for work on or adjacent to the building or Site of the Work.

2.1.25 **"Payroll Taxes"** shall mean State Unemployment Insurance (SUI), Federal Unemployment Insurance (FUI), and payments pursuant to the Federal Insurance Contributions Act (FICA).

2.1.26 **"Project"** shall mean the public improvement to which this Contract relates.

2.1.27 **"Procurement Policy Board" (PPB)** shall mean the Agency of the City of New York whose function is to establish comprehensive and consistent procurement policies and rules which shall have broad application throughout the City.

2.1.28 **"Required Quantity"** in a unit price Contract shall mean the actual quantity of any item of Work or materials which is required to be performed or furnished in order to comply with the Contract.

2.1.29 **"Resident Engineer"** shall mean the representative of the Commissioner duly designated by the Commissioner to be his/her representative at the site of the Work.

2.1.30 **"Site"** shall mean the area upon or in which the Contractor's operations are carried on, and such other areas adjacent thereto as may be designated as such by the Engineer.

2.1.31 **"Small Tools"** shall mean items that are ordinarily required for a worker's job function, including but not limited to, equipment that ordinarily has no licensing, insurance

or substantive storage costs associated with it; such as circular and chain saws, impact drills, threaders, benders, wrenches, socket tools, etc.

2.1.32 **"Specifications"** shall mean all of the directions, requirements, and standards of performance applying to the Work as hereinafter detailed and designated under the Specifications.

2.1.33 **"Subcontractor"** shall mean any person, firm or corporation, other than employees of the Contractor, who or which contracts with the Contractor or with its subcontractors to furnish, or actually furnishes labor, or labor and materials, or labor and equipment, or superintendence, supervision and/or management at the Site. Wherever the word Subcontractor appears, it shall also mean sub-Subcontractor.

2.1.34 **"Substantial Completion"** shall mean the written determination by the Engineer that the Work required under this Contract is substantially, but not entirely, complete and the approval of the **Final Approved Punch List.**

2.1.35 **"Work"** shall mean all services required to complete the Project in accordance with the Contract Documents, including without limitation, labor, material, superintendence, management, administration, equipment, and incidentals, and obtaining any and all permits, certifications and licenses as may be necessary and required to complete the Work, and shall include both Contract Work and Extra Work.

CHAPTER II
THE WORK AND ITS PERFORMANCE

ARTICLE 3. CHARACTER OF THE WORK

3.1 Unless otherwise expressly provided in the **Contract Drawings, Specifications,** and **Addenda,** the **Work** shall be performed in accordance with the best modern practice, utilizing, unless otherwise specified in writing, new and unused materials of standard first grade quality and workmanship and design of the highest quality, to the satisfaction of the **Commissioner.**

ARTICLE 4. MEANS AND METHODS OF CONSTRUCTION

4.1 Unless otherwise expressly provided in the **Contract Drawings, Specifications,** and **Addenda,** the **Means and Methods of Construction** shall be such as the **Contractor** may choose; subject, however, to the **Engineer's** right to reject the **Means and Methods of Construction** proposed by the **Contractor** which in the opinion of the **Engineer**:

4.1.1 Will constitute or create a hazard to the **Work**, or to persons or property; or

4.1.2 Will not produce finished **Work** in accordance with the terms of the **Contract**; or

4.1.3 Will be detrimental to the overall progress of the **Project.**

4.2 The **Engineer's** approval of the **Contractor's Means and Methods of Construction,** or his/her failure to exercise his/her right to reject such means or methods, shall not relieve the **Contractor** of its obligation to complete the **Work** as provided in this **Contract**; nor shall the exercise of such right to reject create a cause of action for damages.

ARTICLE 5. COMPLIANCE WITH LAWS

5.1 The **Contractor** shall comply with all **Laws** applicable to this **Contract** and to the **Work** to be done hereunder.

5.2 Procurement Policy Board Rules: This **Contract** is subject to the Rules of the **PPB** ("**PPB** Rules") in effect at the time of the bid opening for this **Contract**. In the event of a conflict between the **PPB** Rules and a provision of this **Contract**, the **PPB** Rules shall take precedence.

5.3 Noise Control Code provisions.

5.3.1 In accordance with the provisions of Section 24-216(b) of the Administrative Code of the **City** ("Administrative Code"), Noise Abatement Contract Compliance, devices and activities which will be operated, conducted, constructed or manufactured pursuant to this **Contract** and which are subject to the provisions of the **City** Noise Control Code shall be operated, conducted, constructed, or manufactured without causing a violation of the Administrative Code. Such devices and activities shall incorporate advances in the art of noise control development for the kind and level of noise emitted or produced by such devices and activities, in accordance with regulations issued by the **Commissioner** of the **City** Department of Environmental Protection.

5.3.2 The **Contractor** agrees to comply with Section 24-219 of the Administrative Code and implementing rules codified at 15 Rules of the City of New York ("RCNY") Section 28-100 *et seq*. In accordance with such provisions, the **Contractor**, if the **Contractor** is the responsible party under such regulations, shall prepare and post a Construction Noise Mitigation Plan at each **Site**, in which the **Contractor** shall certify that all construction tools and equipment have been maintained so that they operate at normal manufacturers operating specifications. If the **Contractor** cannot make this certification, it must have in place an Alternative Noise Mitigation Plan approved by the **City** Department of Environmental Protection. In addition, the **Contractor**'s certified Construction Noise Mitigation Plan is subject inspection by the **City** Department of Environmental Protection in accordance with Section 28-101 of Title 15 of RCNY. No **Contract Work** may take place at a **Site** unless there is a Construction Noise Mitigation Plan or approved Alternative Noise Mitigation Plan in place. In addition, the **Contractor** shall create and implement a noise mitigation training program. Failure to comply with these requirements may result in fines and other penalties pursuant to the applicable provisions of the Administrative Code and RCNY.

5.4 Ultra Low Sulfur Diesel Fuel: In accordance with the provisions of Section 24-163.3 of the Administrative Code, the **Contractor** specifically agrees as follows:

5.4.1 Definitions. For purposes of this Article 5.4, the following definitions apply:

5.4.1(a) "Contractor" means any person or entity that enters into a Public Works Contract with a **City Agency**, or any person or entity that enters into an agreement with such person or entity, to perform work or provide labor or services related to such Public Works Contract.

5.4.1(b) "Motor Vehicle" means any self-propelled vehicle designed for transporting persons or property on a street or highway.

5.4.1(c) "Nonroad Engine" means an internal combustion engine (including the fuel system) that is not used in a Motor Vehicle or a vehicle used solely for competition, or that is not subject to standards promulgated under Section 7411 or Section 7521 of

Title 42 of the United States Code, except that this term shall apply to internal combustion engines used to power generators, compressors or similar equipment used in any construction program or project.

5.4.1(d) "Nonroad Vehicle" means a vehicle that is powered by a Nonroad Engine, fifty (50) horsepower and greater, and that is not a Motor Vehicle or a vehicle used solely for competition, which shall include, but not be limited to, excavators, backhoes, cranes, compressors, generators, bulldozers, and similar equipment, except that this term shall not apply to horticultural maintenance vehicles used for landscaping purposes that are powered by a Nonroad Engine of sixty-five (65) horsepower or less and that are not used in any construction program or project.

5.4.1(e) "Public Works Contract" means a contract with a **City Agency** for a construction program or project involving the construction, demolition, restoration, rehabilitation, repair, renovation, or abatement of any building, structure, tunnel, excavation, roadway, park or bridge; a contract with a **City Agency** for the preparation for any construction program or project involving the construction, demolition, restoration, rehabilitation, repair, renovation, or abatement of any building, structure, tunnel, excavation, roadway, park or bridge; or a contract with a **City Agency** for any final work involved in the completion of any construction program or project involving the construction, demolition, restoration, rehabilitation, repair, renovation, or abatement of any building, structure, tunnel, excavation, roadway, park or bridge.

5.4.1(f) "Ultra Low Sulfur Diesel Fuel" means diesel fuel that has a sulfur content of no more than fifteen parts per million (15 ppm).

5.4.2 Ultra Low Sulfur Diesel Fuel

5.4.2(a) All **Contractors** shall use Ultra Low Sulfur Diesel Fuel in diesel-powered Nonroad Vehicles in the performance of this **Contract.**

5.4.2(b) Notwithstanding the requirements of Article 5.4.2(a), **Contractors** may use diesel fuel that has a sulfur content of no more than thirty parts per million (30 ppm) to fulfill the requirements of this Article 5.4.2, where the Commissioner of the **City** Department of Environmental Protection ("DEP Commissioner") has issued a determination that a sufficient quantity of Ultra Low Sulfur Diesel Fuel is not available to meet the needs of **Agencies** and **Contractors**. Any such determination shall expire after six (6) months unless renewed.

5.4.2(c) **Contractors** shall not be required to comply with this Article 5.4.2 where the **City Agency** letting this **Contract** makes a written finding, which is approved, in writing, by the DEP Commissioner, that a sufficient quantity of Ultra Low Sulfur Diesel Fuel, or diesel fuel that has a sulfur content of no more than thirty parts per million (30 ppm) is not available to meet the requirements of Section 24-163.3 of the Administrative Code, provided that such **Contractor** in its fulfillment of the requirements of this **Contract**, to the extent practicable, shall use whatever quantity of Ultra Low Sulfur Diesel Fuel or diesel fuel that has a sulfur content of no more than thirty parts per million (30 ppm) is available. Any finding made pursuant to this Article 5.4.2(c) shall expire after sixty (60) **Days**, at which time the requirements of this Article 5.4.2 shall be in full force and effect unless the **City Agency** renews the finding in writing and such renewal is approved by the DEP Commissioner.

5.4.2(d) **Contractors** may check on determinations and approvals issued by the DEP Commissioner pursuant to Section 24-163.3 of the Administrative Code, if any, at www.dep.nyc.gov or by contacting the **City Agency** letting this **Contract.**

5.4.2(e) The requirements of this Article 5.4.2 do not apply where they are precluded by federal or State funding requirements or where the **Contract** is an emergency procurement.

5.4.3 Best Available Technology

5.4.3(a) All **Contractors** shall utilize the best available technology for reducing the emission of pollutants for diesel-powered Nonroad Vehicles in the performance of this **Contract.** For determinations of best available technology for each type of diesel-powered Nonroad Vehicle, **Contractors** shall comply with the regulations of the **City** Department of Environmental Protection, as and when adopted, Chapter 14 of Title 15 of the Rules of the City of New York (RCNY). The **Contractor** shall fully document all steps in the best available technology selection process and shall furnish such documentation to the **City Agency** or the DEP Commissioner upon request. The **Contractor** shall retain all documentation generated in the best available technology selection process for as long as the selected best available technology is in use.

5.4.3(b) No **Contractor** shall be required to replace best available technology for reducing the emission of pollutants or other authorized technology utilized for a diesel-powered Nonroad Vehicle in accordance with the provisions of this Article 5.4.3 within three (3) years of having first utilized such technology for such vehicle.

5.4.3(c) This Article 5.4.3 shall not apply to any vehicle used to satisfy the requirements of a specific Public Works Contract for fewer than twenty (20) **Days.**

5.4.3(d) The **Contractor** shall not be required to comply with this Article 5.4.3 with respect to a diesel-powered Nonroad Vehicle under the following circumstances:

5.4.3(d)(i) Where the **City Agency** makes a written finding, which is approved, in writing, by the DEP Commissioner, that the best available technology for reducing the emission of pollutants as required by this Article 5.4.3 is unavailable for such vehicle, the **Contractor** shall use whatever technology for reducing the emission of pollutants, if any, is available and appropriate for such vehicle.

5.4.3(d)(ii) Where the DEP Commissioner has issued a written waiver based upon the **Contractor** having demonstrated to the DEP Commissioner that the use of the best available technology for reducing the emission of pollutants might endanger the operator of such vehicle or those working near such vehicle, due to engine malfunction, the **Contractor** shall use whatever technology for reducing the emission of pollutants, if any, is available and appropriate for such vehicle, which would not endanger the operator of such vehicle or those working near such vehicle.

5.4.3(d)(iii) In determining which technology to use for the purposes of Articles 5.4.3(d)(i) and 5.4.3(d)(ii) above, the **Contractor** shall primarily consider the reduction in emissions of particulate matter and secondarily consider the reduction in emissions of nitrogen oxides associated with the use of such

technology, which shall in no event result in an increase in the emissions of either such pollutant.

5.4.3(d)(iv) The **Contractor** shall submit requests for a finding or a waiver pursuant to this Article 5.4.3(d) in writing to the DEP Commissioner, with a copy to the **ACCO** of the **City Agency** letting this **Contract**. Any finding or waiver made or issued pursuant to Articles 5.4.3(d)(i) and 5.4.3(d)(ii) above shall expire after one hundred eighty (180) **Days**, at which time the requirements of Article 5.4.3(a) shall be in full force and effect unless the **City Agency** renews the finding, in writing, and the DEP Commissioner approves such finding, in writing, or the DEP Commissioner renews the waiver, in writing.

5.4.3(e) The requirements of this Article 5.4.3 do not apply where they are precluded by federal or State funding requirements or where the **Contract** is an emergency procurement.

5.4.4 Section 24-163 of the Administrative Code. The **Contractor** shall comply with Section 24-163 of the Administrative Code related to the idling of the engines of motor vehicles while parking.

5.4.5 Compliance

5.4.5(a) The **Contractor's** compliance with Article 5.4 may be independently monitored. If it is determined that the **Contractor** has failed to comply with any provision of Article 5.4, any costs associated with any independent monitoring incurred by the **City** shall be reimbursed by the **Contractor**.

5.4.5(b) Any **Contractor** who violates any provision of Article 5.4, except as provided in Article 5.4.5(c) below, shall be liable for a civil penalty between the amounts of one thousand ($1,000) and ten thousand ($10,000) dollars, in addition to twice the amount of money saved by such **Contractor** for failure to comply with Article 5.4.

5.4.5(c) No **Contractor** shall make a false claim with respect to the provisions of Article 5.4 to a **City Agency**. Where a **Contractor** has been found to have done so, such **Contractor** shall be liable for a civil penalty of twenty thousand ($20,000) dollars, in addition to twice the amount of money saved by such **Contractor** in association with having made such false claim.

5.4.6 Reporting

5.4.6(a) For all Public Works Contracts covered by this Article 5.4, the **Contractor** shall report to the **City Agency** the following information:

5.4.6(a)(i) The total number of diesel-powered Nonroad Vehicles used to fulfill the requirements of this Public Works Contract;

5.4.6(a)(ii) The number of such Nonroad Vehicles that were powered by Ultra Low Sulfur Diesel Fuel;

5.4.6(a)(iii) The number of such Nonroad Vehicles that utilized the best available technology for reducing the emission of pollutants, including a breakdown by vehicle model and the type of technology;

5.4.6(a)(iv) The number of such Nonroad Vehicles that utilized such other authorized technology in accordance with Article 5.4.3, including a breakdown by vehicle model and the type of technology used for each such vehicle;

5.4.6(a)(v) The locations where such Nonroad Vehicles were used; and

5.4.6(a)(vi) Where a determination is in effect pursuant to Article 5.4.2(b) or 5.4.2(c), detailed information concerning the **Contractor's** efforts to obtain Ultra Low Sulfur Diesel Fuel or diesel fuel that has a sulfur content of no more than thirty parts per million (30 ppm).

5.4.6(b) The **Contractor** shall submit the information required by Article 5.4.6(a) at the completion of **Work** under the Public Works Contract and on a yearly basis no later than August 1 throughout the term of the Public Works Contract. The yearly report shall cover **Work** performed during the preceding fiscal year (July 1 - June 30).

5.5 Ultra Low Sulfur Diesel Fuel. In accordance with the Coordinated Construction Act for Lower Manhattan, as amended:

5.5.1 Definitions. For purposes of this Article 5.5, the following definitions apply:

5.5.1(a) "Lower Manhattan" means the area to the south of and within the following lines: a line beginning at a point where the United States pierhead line in the Hudson River as it exists now or may be extended would intersect with the southerly line of West Houston Street in the Borough of Manhattan extended, thence easterly along the southerly side of West Houston Street to the southerly side of Houston Street, thence easterly along the southerly side of Houston Street to the southerly side of East Houston Street, thence northeasterly along the southerly side of East Houston Street to the point where it would intersect with the United States pierhead line in the East River as it exists now or may be extended, including tax lots within or immediately adjacent thereto.

5.5.1(b) "Lower Manhattan Redevelopment Project" means any project in Lower Manhattan that is funded in whole or in part with federal or State funding, or any project intended to improve transportation between Lower Manhattan and the two air terminals in the **City** known as LaGuardia Airport and John F. Kennedy International Airport, or between Lower Manhattan and the air terminal in Newark known as Newark Liberty International Airport, and that is funded in whole or in part with federal funding.

5.5.1(c) "Nonroad Engine" means an internal combustion engine (including the fuel system) that is not used in a Motor Vehicle or a vehicle used solely for competition, or that is not subject to standards promulgated under Section 7411 or Section 7521 of Title 42 of the United States Code, except that this term shall apply to internal combustion engines used to power generators, compressors or similar equipment used in any construction program or project.

5.5.1(d) "Nonroad Vehicle" means a vehicle that is powered by a Nonroad Engine, fifty (50) horsepower (HP) and greater, and that is not a Motor Vehicle or a vehicle used solely for competition, which shall include, but not be limited to, excavators, backhoes, cranes, compressors, generators, bulldozers, and similar equipment, except

that this terms shall not apply to horticultural maintenance vehicles used for landscaping purposes that are powered by a Nonroad Engine of sixty-five (65) HP or less and that are not used in any construction program or project.

5.5.1(e) "Ultra Low Sulfur Diesel Fuel" means diesel fuel that has a sulfur content of no more than fifteen parts per million (15 ppm).

5.5.2 Requirements. **Contractors** and **Subcontractors** are required to use only Ultra Low Sulfur Diesel Fuel to power the diesel-powered Nonroad Vehicles with engine HP rating of fifty (50) HP and above used on a Lower Manhattan Redevelopment Project and, where practicable, to reduce the emission of pollutants by retrofitting such Nonroad Vehicles with oxidation catalysts, particulate filters, or technology that achieves lowest particulate matter emissions.

5.6 Pesticides. In accordance with Section 17-1209 of the Administrative Code, to the extent that the **Contractor** or any **Subcontractor** applies pesticides to any property owned or leased by the **City**, the **Contractor,** and any **Subcontractor** shall comply with Chapter 12 of the Administrative Code.

5.7 Waste Treatment, Storage, and Disposal Facilities and Transporters. In connection with the **Work**, the **Contractor** and any **Subcontractor** shall use only those waste treatment, storage, and disposal facilities and waste transporters that possess the requisite license, permit or other governmental approval necessary to treat, store, dispose, or transport the waste, materials or hazardous substances.

5.8 Environmentally Preferable Purchasing. The **Contractor** shall ensure that products purchased or leased by the **Contractor** or any **Subcontractor** for the **Work** that are not specified by the **City** or are submitted as equivalents to a product specified by the **City** comply with the requirements of the New York City Environmentally Preferable Purchasing Program contained in Chapter 11 of Title 43 of the RCNY, pursuant to Chapter 3 of Title 6 of the Administrative Code.

ARTICLE 6. INSPECTION

6.1 During the progress of the **Work** and up to the date of **Final Acceptance**, the **Contractor** shall at all times afford the representatives of the **City** every reasonable, safe, and proper facility for inspecting all **Work** done or being done at the **Site** and also for inspecting the manufacture or preparation of materials and equipment at the place of such manufacture or preparation.

6.2 The **Contractor's** obligation hereunder shall include the uncovering or taking down of finished **Work** and its restoration thereafter; provided, however, that the order to uncover, take down and restore shall be in writing, and further provided that if **Work** thus exposed proves satisfactory, and if the **Contractor** has complied with Article 6.1, such uncovering or taking down and restoration shall be considered an item of **Extra Work** to be paid for in accordance with the provisions of Article 26. If the **Work** thus exposed proves unsatisfactory, the **City** has no obligation to compensate the **Contractor** for the uncovering, taking down or restoration.

6.3 Inspection and approval by the **Commissioner**, the **Engineer**, **Project Manager**, or **Resident Engineer**, of finished **Work** or of **Work** being performed, or of materials and equipment at the place of manufacture or preparation, shall not relieve the **Contractor** of its obligation to perform the **Work** in strict accordance with the **Contract**. Finished or unfinished **Work** not found to be in strict accordance with the **Contract** shall be replaced as directed by the **Engineer**, even though such **Work** may have been previously approved and paid for. Such corrective **Work** is **Contract Work** and shall not be deemed **Extra Work**.

6.4 Rejected **Work** and materials shall be promptly taken down and removed from the **Site**, which must at all times be kept in a reasonably clean and neat condition.

ARTICLE 7. PROTECTION OF WORK AND OF PERSONS AND PROPERTY; NOTICES AND INDEMNIFICATION

7.1 During the performance of the **Work** and up to the date of **Final Acceptance**, the **Contractor** shall be under an absolute obligation to protect the finished and unfinished **Work** against any damage, loss, injury, theft and/or vandalism and in the event of such damage, loss, injury, theft and/or vandalism, it shall promptly replace and/or repair such **Work** at the **Contractor's** sole cost and expense, as directed by the **Resident Engineer**. The obligation to deliver finished **Work** in strict accordance with the **Contract** prior to **Final Acceptance** shall be absolute and shall not be affected by the **Resident Engineer's** approval of, or failure to prohibit, the **Means and Methods of Construction** used by the **Contractor**.

7.2 During the performance of the **Work** and up to the date of **Final Acceptance**, the **Contractor** shall take all reasonable precautions to protect all persons and the property of the **City** and of others from damage, loss or injury resulting from the **Contractor's**, and/or its **Subcontractors'** operations under this **Contract.** The **Contractor's** obligation to protect shall include the duty to provide, place or replace, and adequately maintain at or about the **Site** suitable and sufficient protection such as lights, barricades, and enclosures.

7.3 The **Contractor** shall comply with the notification requirements set forth below in the event of any loss, damage or injury to **Work**, persons or property, or any accidents arising out of the operations of the **Contractor** and/or its **Subcontractors** under this **Contract**.

7.3.1 The **Contractor** shall make a full and complete report in writing to the **Resident Engineer** within three (3) **Days** after the occurrence.

7.3.2 The **Contractor** shall also send written notice of any such event to all insurance carriers that issued potentially responsive policies (including commercial general liability insurance carriers for events relating to the **Contractor**'s own employees) no later than twenty (20) days after such event and again no later than twenty (20) days after the initiation of any claim and/or action resulting therefrom. Such notice shall contain the following information: the number of the insurance policy, the name of the Named Insured, the date and location of the incident, and the identity of the persons injured or property damaged. For any policy on which the **City** and/or the **Engineer**, **Architect**, or **Project Manager** are Additional Insureds, such notice shall expressly specify that "this notice is being given on behalf of the City of New York as Additional Insured, such other Additional Insureds, as well as the Named Insured."

7.3.2(a) Whenever such notice is sent under a policy on which the **City** is an Additional Insured, the **Contractor** shall provide copies of the notice to the **Comptroller,** the **Commissioner** and the **City** Corporation Counsel. The copy to the **Comptroller** shall be sent to the Insurance Unit, NYC Comptroller's Office, 1 Centre Street – Room 1222, New York, New York, 10007. The copy to the **Commissioner** shall be sent to the address set forth in Schedule A of the General Conditions. The copy to the **City** Corporation Counsel shall be sent to Insurance Claims Specialist, Affirmative Litigation Division, New York City Law Department, 100 Church Street, New York, New York 10007.

7.3.2(b) If the **Contractor** fails to provide any of the foregoing notices to any appropriate insurance carrier(s) in a timely and complete manner, the **Contractor** shall indemnify the **City** for all losses, judgments, settlements, and expenses, including reasonable attorneys' fees, arising from an insurer's disclaimer of coverage citing late notice by or on behalf of the **City**.

7.4 To the fullest extent permitted by law, the **Contractor** shall defend, indemnify, and hold the **City**, its employees, and officials (the "Indemnitees") harmless against any and all claims (including but not limited to claims asserted by any employee of the **Contractor** and/or its **Subcontractors**) and costs and expenses of whatever kind (including but not limited to payment or reimbursement of attorneys' fees and disbursements) allegedly arising out of or in any way related to the operations of the **Contractor** and/or its **Subcontractors** in the performance of this **Contract** or from the **Contractor's** and/or its **Subcontractors'** failure to comply with any of the provisions of this **Contract** or of the **Law**. Such costs and expenses shall include all those incurred in defending the underlying claim and those incurred in connection with the enforcement of this Article 7.4 by way of cross-claim, third-party claim, declaratory action or otherwise. The parties expressly agree that the indemnification obligation hereunder contemplates (1) full indemnity in the event of liability imposed against the Indemnitees without negligence and solely by reason of statute, operation of **Law** or otherwise; and (2) partial indemnity in the event of any actual negligence on the part of the Indemnitees either causing or contributing to the underlying claim (in which case, indemnification will be limited to any liability imposed over and above that percentage attributable to actual fault whether by statute, by operation of **Law**, or otherwise). Where partial indemnity is provided hereunder, all costs and expenses shall be indemnified on a pro rata basis.

7.4.1 Indemnification under Article 7.4 or any other provision of the **Contract** shall operate whether or not **Contractor** or its **Subcontractors** have placed and maintained the insurance specified under Article 22.

7.5 The provisions of this Article 7 shall not be deemed to create any new right of action in favor of third parties against the **Contractor** or the **City**.

CHAPTER III
TIME PROVISIONS

ARTICLE 8. COMMENCEMENT AND PROSECUTION OF THE WORK

8.1 The **Contractor** shall commence the **Work** on the date specified in the **Notice to Proceed** or the **Order to Work**. The time for performance of the **Work** under the **Contract** shall be computed from the date specified in the **Notice to Proceed** or the **Order to Work**. **TIME BEING OF THE ESSENCE** to the **City**, the **Contractor** shall thereafter prosecute the **Work** diligently, using such **Means and Methods of Construction** as are in accord with Article 4 herein and as will assure its completion not later than the date specified in this Contract, or on the date to which the time for completion may be extended.

ARTICLE 9. PROGRESS SCHEDULES

9.1 To enable the **Work** to be performed in an orderly and expeditious manner, the **Contractor**, within fifteen (15) **Days** after the **Notice to Proceed** or **Order to Work**, unless otherwise directed by the **Engineer**, shall submit to the **Engineer** a proposed progress schedule based on the Critical Path Method in the form of a bar graph or in such other form as specified by the **Engineer**, and monthly cash flow requirements, showing:

9.1.1 The anticipated time of commencement and completion of each of the various operations to be performed under this **Contract**; and

9.1.2 The sequence and interrelation of each of these operations with the others and with those of other related contracts; and

9.1.3 The estimated time required for fabrication or delivery, or both, of all materials and equipment required for the **Work**, including the anticipated time for obtaining required approvals pursuant to Article 10; and

9.1.4 The estimated amount in dollars the **Contractor** will claim on a monthly basis.

9.2 The proposed schedule shall be revised as directed by the **Engineer**, until finally approved by the **Engineer**, and after such approval, subject to the provisions of Article 11, shall be strictly adhered to by the **Contractor**.

9.3 If the **Contractor** shall fail to adhere to the approved progress schedule, or to the schedule as revised pursuant to Article 11, it shall promptly adopt such other or additional **Means and Methods of Construction**, at its sole cost and expense, as will make up for the time lost and will assure completion in accordance with the approved progress schedule. The approval by the **City** of a progress schedule which is shorter than the time allotted under the **Contract** shall not create any liability for the **City** if the approved progress schedule is not met.

9.4 The **Contractor** will not receive any payments until the proposed progress schedule is submitted.

ARTICLE 10. REQUESTS FOR INFORMATION OR APPROVAL

10.1 From time to time as the **Work** progresses and in the sequence indicated by the approved progress schedule, the **Contractor** shall submit to the **Engineer** a specific request in writing for each item of information or approval required by the **Contractor**. These requests shall state the latest date upon which the information or approval is actually required by the **Contractor**, and shall be submitted in a reasonable time in advance thereof to provide the **Engineer** a sufficient time to act upon such submissions, or any necessary re-submissions thereof.

10.2 The **Contractor** shall not have any right to an extension of time on account of delays due to the **Contractor's** failure to submit requests for the required information or the required approval in accordance with the above requirements.

ARTICLE 11. NOTICE OF CONDITIONS CAUSING DELAY AND DOCUMENTATION OF DAMAGES CAUSED BY DELAY

11.1 After the commencement of any condition which is causing or may cause a delay in completion of the **Work**, including conditions for which the **Contractor** may be entitled to an extension of time, the following notifications and submittals are required:

11.1.1 Within seven (7) **Days** after the commencement of such condition, the **Contractor** must notify the **Engineer** in writing of the existence, nature and effect of such condition upon the approved progress schedule and the **Work**, and must state why and in what respects, if any, the condition is causing or may cause a delay.

11.1.2 If the **Contractor** shall claim to be sustaining damages for delay as provided for in this Article 11, within forty-five (45) **Days** from the time such damages are first incurred, and every thirty (30) **Days** thereafter for as long as such damages are being incurred, the **Contractor** shall submit to the **Commissioner** verified written statements of the details and the amounts of such damages, together with documentary evidence of such damages, ("statement of delay damages") as further detailed in Article 11.6. The **Contractor** may submit any of the above statements within such additional time as may be granted by the **Commissioner** in writing upon written request therefor. On failure of the **Contractor** to strictly comply with all of the foregoing provisions, such claims shall be deemed waived and no right to recover on such claims shall exist. Damages that the **Contractor** may claim in any action arising under or by reason of this **Contract** shall not be different from or in excess of the statements made and documentation provided pursuant to this Article 11.

11.1.3Within 60 days of submission of the final verified statement of claims pursuant to Article 44, the **Commissioner** shall make a determination as to whether a compensable delay has occurred and, if so, the amount of compensation due the **Contractor**. Notwithstanding the above, the **Commissioner** may make a determination as to whether a compensable delay has occurred at any time after the **Contractor's** first submission of a statement of delay damages provided, however, that the amount of compensation due to the **Contractor** will not be determined until the **Commissioner** determines that the **Work** is delayed after the date set for substantial completion.

11.2 Failure of the **Contractor** to strictly comply with the requirements of Article 11.1.1 may, in the discretion of the **Commissioner**, be deemed sufficient cause to deny any extension of time on account of delay arising out of such condition. Failure of the **Contractor** to strictly comply with the requirements of Articles 11.1.1 and 11.1.2 shall be deemed a conclusive waiver by the **Contractor** of any and all claims for damages for delay arising from such condition and no right to recover on such claims shall exist.

11.3 When appropriate and directed by the **Engineer**, the progress schedule shall be revised by the **Contractor** until finally approved by the **Engineer**. The revised progress schedule must be strictly adhered to by the **Contractor**.

11.4 Compensable Delays

11.4.1 The **Contractor** agrees to make claim only for additional costs attributable to delay in the performance of this **Contract** necessarily extending the time for completion of the **Work** or resulting from acceleration directed by the **Commissioner** and required to maintain the **Project** schedule, occasioned solely by any act or omission to act of the **City** listed below. The **Contractor** also agrees that delay from any other cause shall be compensated, if at all, solely by an extension of time to complete the performance of the **Work**.

11.4.1.1 The failure of the **City** to take reasonable measures to coordinate and progress the **Work**, except that the City shall not be responsible for the **Contractor's** obligation to coordinate and progress the **Work** of its **Subcontractors**.

11.4.1.2 Extended delays attributable to the **City** in the review or issuance of change orders, in shop drawing reviews and approvals or as a result of the cumulative impact of multiple change orders, which have a verifiable impact on **Project** costs.

11.4.1.3 The unavailability of the **Site** for an extended period of time that significantly affects the scheduled completion of the **Contract**.

11.4.1.4 The issuance by the **Engineer** of a stop work order relative to a substantial portion of the **Work** for a period exceeding thirty (30) **Days**, that was not brought about through any action or omission of the **Contractor.**

11.4.1.5 Differing site conditions that were neither known nor reasonably ascertainable on a pre-bid inspection of the **Site** or review of the bid documents or other publicly available sources, and that are not ordinarily encountered in the **Project's** geographical area or neighborhood or in the type of **Work** to be performed.

11.4.1.6 Delays caused by the **City's** bad faith or its willful, malicious, or grossly negligent conduct;

11.4.1.7 Delays not contemplated by the parties;

11.4.1.8 Delays so unreasonable that they constitute an intentional abandonment of the **Contract** by the **City**; and

11.4.1.9 Delays resulting from the **City's** breach of a fundamental obligation of the **Contract.**

11.4.2 No claim may be made for any alleged delay in **Substantial Completion** of the **Work** by a date earlier than the date of **Substantial Completion** provided for in Schedule A unless there is a provision in the **Contract** providing for additional compensation for early completion. No claim may be made for any alleged delay in **Substantial Completion** of the **Work** if the work is substantially completed by the date of **Substantial Completion** provided for in Schedule A unless acceleration has been directed by the **Commissioner** to meet the date of **Substantial Completion** set forth in Schedule A.

11.4.3 The provisions of this Article 11 apply only to claims for additional costs attributable to delay and do not preclude determinations by the **Commissioner** allowing reimbursements for additional costs for **Extra Work** pursuant to Articles 25 and 26 of this **Contract**. To the extent that any cost attributable to delay is reimbursed as part of a change order, no additional claim for compensation under this Article 11 shall be allowed.

11.5 Non-Compensable Delays. The **Contractor** agrees to make no claim for, and is deemed to have included in its bid prices for the various items of the **Contract**, the extra/additional costs attributable to any delays caused by or attributable to the items set forth below. For such items, the **Contractor** shall be compensated, if at all, solely by an extension of time to complete the performance of the **Work**, in accordance with the provisions of Article 13. Such extensions of time will be granted, if at all, pursuant to the grounds set forth in Article 13.3.

11.5.1 The acts or omissions of any third parties, including but not limited to **Other Contractors**, public/ governmental bodies (other than **City Agencies**), utilities or private enterprises, who are disclosed in the **Contract Documents** or are ordinarily encountered or generally recognized as related to the **Work**;

11.5.2 Any situation which was within the contemplation of the parties at the time of entering into the **Contract**, including any delay indicated or disclosed in the **Contract Documents** or generally recognized as related to the nature of the **Work**, and/or the existence of any facility or appurtenance owned, operated or maintained by any third party, as indicated or disclosed in the **Contract Documents** or ordinarily encountered or generally recognized as related to the nature of the **Work**;

11.5.3 Restraining orders, injunctions or judgments issued by a court which were caused by a Contractor's submission, action or inaction or by a Contractor's **Means and Methods of**

Construction, or by third parties, unless such order, injunction or judgment was the result of an action or omission by the **City**;

11.5.4 Any labor boycott, strike, picketing, lockout or similar situation;

11.5.5 Any shortages of supplies or materials, or unavailability of equipment, required by the **Contract Work**;

11.5.6 Climatic conditions, storms, floods, droughts, tidal waves, fires, hurricanes, earthquakes, landslides or other catastrophes or acts of God, or acts of war or of the public enemy or terrorist acts, including the **City's** reasonable responses thereto; and

11.5.7 **Extra Work** which does not significantly affect the overall completion of the **Contract**, reasonable delays in the review or issuance of change orders or field orders and/or in shop drawing reviews or approvals.

11.6 Required Content of Submission of Statement of Delay Damages

11.6.1 In the verified written statement of delay damages required by Article 11.1.2, the following information shall be provided by the **Contractor**:

11.6.1.1 For each delay, the start and end dates of the claimed periods of delay and, in addition, a description of the operations that were delayed, an explanation of how they were delayed, and the reasons for the delay, including identifying the applicable act or omission of the City listed in Article 11.4.

11.6.1.2 A detailed factual statement of the claim providing all necessary dates, locations and items of **Work** affected by the claim.

11.6.1.3 The amount of additional compensation sought and a breakdown of that amount into categories as described in Article 26.2, subject to the limitations set forth in Article 11.7.

11.6.1.4 Any additional information requested by the **Commissioner**.

11.7 Recoverable Costs

11.7.1 Delay damages may be recoverable for the following costs actually and necessarily incurred in the performance of the **Work**:

11.7.1.1 Direct labor, including payroll taxes (subject to statutory wage caps) and supplemental benefits, based on time and materials records;

11.7.1.2 Necessary materials (including transportation to the **Site**), based on time and material records;

11.7.1.3 Reasonable rental value of necessary plant and equipment other than small tools, plus fuel/energy costs according to the applicable formula set forth in Articles 26.2.4 and/or 26.2.8, based on time and material records;

11.7.1.4 Insurance and bond costs;

11.7.1.5 Extended field office costs;

11.7.1.6 Extended **Site** overhead; and

11.7.1.7 Extended home office overhead.

11.7.2 Recoverable Subcontractor Costs. When the **Work** is performed by a **Subcontractor**, the **Contractor** may be paid the actual and necessary costs of such subcontracted **Work** as outlined above in Articles 11.7.1.1 through 11.7.1.6, and an

additional overhead of five (5%) percent of the costs outlined in Articles 11.7.1.1 through 11.7.1.3.

11.7.3 Non-Recoverable Costs. The parties agree that the **City** will have no liability for the following items and the **Contractor** agrees it shall make no claim for the following items:

11.7.3.1 Profit, or loss of anticipated or unanticipated profit;

11.7.3.2 Consequential damages, including but not limited to interest on monies in dispute, including interest which is paid on such monies, loss of bonding capacity, bidding opportunities, or interest in investment, or any resulting insolvency;

11.7.3.3 Indirect costs or expenses of any nature;

11.7.3.4 Direct or indirect costs attributable to performance of **Work** where the **Contractor**, because of situations or conditions within its control, has not progressed the **Work** in a satisfactory manner; and

11.7.3.5 Attorneys' fees and dispute and claims preparation expenses.

11.8 Determinations under this Article 11 are not subject to the jurisdiction of the Contract Dispute Resolution Board pursuant to the dispute resolution process set forth in Article 27.

11.9 If the parties agree, pursuant to Article 11.1.3 above, that a compensable delay has occurred and agree on the amount of compensation, payment may be made pursuant to a written change order. Payment pursuant to such change order is subject to pre-audit by the **Engineering Audit Officer,** and may be post-audited by the **Comptroller** and/or the **Agency**.

ARTICLE 12. COORDINATION WITH OTHER CONTRACTORS

12.1 During the progress of the **Work**, **Other Contractors** may be engaged in performing other work or may be awarded other contracts for additional work on this **Project**. In that event, the **Contractor** shall coordinate the **Work** to be done hereunder with the work of such **Other Contractors** and the **Contractor** shall fully cooperate with such **Other Contractors** and carefully fit its own **Work** to that provided under other contracts as may be directed by the **Engineer**. The **Contractor** shall not commit or permit any act which will interfere with the performance of work by any **Other Contractors**.

12.2 If the **Engineer** determines that the **Contractor** is failing to coordinate its **Work** with the work of **Other Contractors** as the **Engineer** has directed, then the **Commissioner** shall have the right to withhold any payments otherwise due hereunder until the **Contractor** completely complies with the **Engineer's** directions.

12.3 The **Contractor** shall notify the **Engineer** in writing if any **Other Contractor** on this **Project** is failing to coordinate its work with the **Work** of this **Contract**. If the **Engineer** finds such charges to be true, the **Engineer** shall promptly issue such directions to the **Other Contractor** with respect thereto as the situation may require. The **City** shall not, however, be liable for any damages suffered by any **Other Contractor's** failure to coordinate its work with the **Work** of this **Contract** or by reason of the **Other Contractor's** failure to promptly comply with the directions so issued by the **Engineer**, or by reason of any **Other Contractor's** default in performance, it being understood that the **City** does not guarantee the responsibility or continued efficiency of any contractor. The **Contractor** agrees to make no claim against

the **City** for any damages relating to or arising out of any directions issued by the **Engineer** pursuant to this Article 12 (including but not limited to the failure of any **Other Contractor** to comply or promptly comply with such directions), or the failure of the **Engineer** to issue any directions, or the failure of any **Other Contractor** to coordinate its work, or the default in performance of any **Other Contractor**.

12.4 The **Contractor** shall indemnify and hold the **City** harmless from any and all claims or judgments for damages and from costs and expenses to which the **City** may be subjected or which it may suffer or incur by reason of the **Contractor's** failure to comply with the **Engineer's** directions promptly; and the **Comptroller** shall have the right to exercise the powers reserved in Article 23 with respect to any claims which may be made for damages due to the **Contractor's** failure to comply with the **Engineer's** directions promptly. Insofar as the facts and **Law** relating to any claim would preclude the **City** from being completely indemnified by the **Contractor**, the **City** shall be partially indemnified by the **Contractor** to the fullest extent provided by **Law**.

12.5 Should the **Contractor** sustain any damage through any act or omission of any **Other Contractor** having a contract with the **City** for the performance of work upon the **Site** or of work which may be necessary to be performed for the proper prosecution of the **Work** to be performed hereunder, or through any act or omission of a subcontractor of such **Other Contractor**, the **Contractor** shall have no claim against the **City** for such damage, but shall have a right to recover such damage from the **Other Contractor** under the provision similar to the following provisions which apply to this **Contract** and have been or will be inserted in the contracts with such **Other Contractors**:

> 12.5.1 Should any **Other Contractor** having or who shall hereafter have a contract with the **City** for the performance of work upon the **Site** sustain any damage through any act or omission of the **Contractor** hereunder or through any act or omission of any **Subcontractor** of the **Contractor**, the **Contractor** agrees to reimburse such **Other Contractor** for all such damages and to defend at its own expense any action based upon such claim and if any judgment or claim (even if the allegations of the action are without merit) against the **City** shall be allowed the **Contractor** shall pay or satisfy such judgment or claim and pay all costs and expenses in connection therewith and agrees to indemnify and hold the **City** harmless from all such claims. Insofar as the facts and **Law** relating to any claim would preclude the **City** from being completely indemnified by the **Contractor**, the **City** shall be partially indemnified by the **Contractor** to the fullest extent provided by **Law**.

12.6 The **City's** right to indemnification hereunder shall in no way be diminished, waived or discharged by its recourse to assessment of liquidated damages as provided in Article 15, or by the exercise of any other remedy provided for by **Contract** or by **Law**.

ARTICLE 13. EXTENSION OF TIME FOR PERFORMANCE

13.1 If performance by the **Contractor** is delayed for a reason set forth in Article 13.3, the **Contractor** may be allowed a reasonable extension of time in conformance with this Article 13 and the **PPB** Rules.

13.2 Any extension of time may be granted only by the **ACCO** or by the Board for the Extension of Time (hereafter "Board") (as set forth below) upon written application by the **Contractor**.

13.3 Grounds for Extension: If such application is made, the **Contractor** shall be entitled to an extension of time for delay in completion of the **Work** caused solely:

13.3.1 By the acts or omissions of the **City**, its officials, agents or employees; or

13.3.2 By the act or omissions of **Other Contractors** on this **Project**; or

13.3.3 By supervening conditions entirely beyond the control of either party hereto (such as, but not limited to, acts of God or the public enemy, excessive inclement weather, war or other national emergency making performance temporarily impossible or illegal, or strikes or labor disputes not brought about by any act or omission of the **Contractor**).

13.3.4 The **Contractor** shall, however, be entitled to an extension of time for such causes only for the number of **Days** of delay which the **ACCO** or the Board may determine to be due solely to such causes, and then only if the **Contractor** shall have strictly complied with all of the requirements of Articles 9 and 10.

13.4 The **Contractor** shall not be entitled to receive a separate extension of time for each of several causes of delay operating concurrently, but, if at all, only for the actual period of delay in completion of the **Work** as determined by the **ACCO** or the Board, irrespective of the number of causes contributing to produce such delay. If one of several causes of delay operating concurrently results from any act, fault or omission of the **Contractor** or of its **Subcontractors** or **Materialmen**, and would of itself (irrespective of the concurrent causes) have delayed the **Work**, no extension of time will be allowed for the period of delay resulting from such act, fault or omission.

13.5 The determination made by the **ACCO** or the Board on an application for an extension of time shall be binding and conclusive on the **Contractor**.

13.6 The **ACCO** or the Board acting entirely within their discretion may grant an application for an extension of time for causes of delay other than those herein referred.

13.7 Permitting the **Contractor** to continue with the **Work** after the time fixed for its completion has expired, or after the time to which such completion may have been extended has expired, or the making of any payment to the **Contractor** after such time, shall in no way operate as a waiver on the part of the **City** of any of its rights under this **Contract**.

13.8 Application for Extension of Time:

13.8.1 Before the **Contractor's** time extension request will be considered, the **Contractor** shall notify the **ACCO** of the condition which allegedly has caused or is causing the delay, and shall submit a written application to the **ACCO** identifying:

13.8.1(a) The **Contractor**; the registration number; and **Project** description;

13.8.1(b) Liquidated damage assessment rate, as specified in the **Contract**;

13.8.1(c) Original total bid price;

13.8.1(d) The original **Contract** start date and completion date;

13.8.1(e) Any previous time extensions granted (number and duration); and

13.8.1(f) The extension of time requested.

13.8.2 In addition, the application for extension of time shall set forth in detail:

13.8.2(a) The nature of each alleged cause of delay in completing the **Work**;

13.8.2(b) The date upon which each such cause of delay began and ended and the number of **Days** attributable to each such cause;

13.8.2(c) A statement that the **Contractor** waives all claims except for those delineated in the application, and the particulars of any claims which the **Contractor** does not agree to waive. For time extensions for **Substantial Completion** and final completion payments, the application shall include a detailed statement of the dollar amounts of each element of claim item reserved; and

13.8.2(d) A statement indicating the **Contractor's** understanding that the time extension is granted only for purposes of permitting continuation of **Contract** performance and payment for **Work** performed and that the **City** retains its right to conduct an investigation and assess liquidated damages as appropriate in the future.

13.9 Analysis and Approval of Time Extensions:

13.9.1 For time extensions for partial payments, a written determination shall be made by the **ACCO** who may, for good and sufficient cause, extend the time for the performance of the **Contract** as follows:

13.9.1(a) If the **Work** is to be completed within six (6) months, the time for performance may be extended for sixty (60) **Days**;

13.9.1(b) If the **Work** is to be completed within less than one (1) year but more than six (6) months, an extension of ninety (90) **Days** may be granted;

13.9.1(c) If the **Contract** period exceeds one (1) year, besides the extension granted in Article 13.9.1(b), an additional thirty (30) **Days** may be granted for each multiple of six (6) months involved beyond the one (1) year period; or

13.9.1(d) If exceptional circumstances exist, the **ACCO** may extend the time for performance beyond the extensions in Articles 13.9.1(a), 13.9.1(b), and 13.9.1(c). In that event, the **ACCO** shall file with the Mayor's Office of Contract Services a written explanation of the exceptional circumstances.

13.9.2 For extensions of time for **Substantial Completion** and final completion payments, the **Engineer**, in consultation with the **ACCO**, shall prepare a written analysis of the delay (including a preliminary determination of the causes of delay, the beginning and end dates for each such cause of delay, and whether the delays are excusable under the terms of this **Contract**). The report shall be subject to review by and approval of the Board, which shall have authority to question its analysis and determinations and request additional facts or documentation. The report as reviewed and made final by the Board shall be made a part of the **Agency** contract file. Neither the report itself nor anything contained therein shall operate as a waiver or release of any claim the **City** may have against the **Contractor** for either actual or liquidated damages.

13.9.3 Approval Mechanism for Time Extensions for **Substantial Completion** or Final Completion Payments: An extension shall be granted only with the approval of the Board which is comprised of the **ACCO** of the **Agency**, the **City** Corporation Counsel, and the **Comptroller**, or their authorized representatives.

13.9.4 Neither the granting of any application for an extension of time to the **Contractor** or any **Other Contractor** on this **Project** nor the papers, records or reports related to any application for or grant of an extension of time or determination related thereto shall be referred to or offered in evidence by the **Contractor** or its attorneys in any action or proceeding.

13.10 No Damage for Delay: The **Contractor** agrees to make no claim for damages for delay in the performance of this **Contract** occasioned by any act or omission to act of the **City** or any of its representatives, except as provided for in Article 11.

ARTICLE 14. COMPLETION AND FINAL ACCEPTANCE OF THE WORK

14.1 Date for **Substantial Completion**: The **Contractor** shall substantially complete the **Work** within the time fixed in Schedule A of the General Conditions, or within the time to which such **Substantial Completion** may be extended.

14.2 Determining the Date of **Substantial Completion**: The **Work** will be deemed to be substantially complete when the two conditions set forth below have been met.

14.2.1 Inspection: The **Engineer** has inspected the **Work** and has made a written determination that it is substantially complete.

14.2.2 Approval of **Final Approved Punch List** and Date for **Final Acceptance**: Following inspection of the **Work**, the **Engineer** shall furnish the **Contractor** with a final punch list, specifying all items of **Work** to be completed and proposing dates for the completion of each specified item of **Work**. The **Contractor** shall then submit in writing to the **Engineer** within ten (10) **Days** of the **Engineer** furnishing the final punch list either acceptance of the dates or proposed alternative dates for the completion of each specified item of **Work**. If the **Contractor** proposes alternative dates, then, within a reasonable time after receipt, the **Engineer**, in a written notification to the **Contractor**, shall approve the **Contractor's** completion dates or, if they are unable to agree, the Engineer shall establish dates for the completion of each item of **Work**. If the **Contractor** neither accepts the dates nor proposes alternative dates within ten (10) **Days**, the schedule proposed by the **Engineer** shall be deemed accepted. The latest completion date specified shall be the date for **Final Acceptance** of the **Work**.

14.3 Date of **Substantial Completion**. The date of approval of the **Final Approved Punch List**, shall be the date of **Substantial Completion**. The date of approval of the **Final Approved Punch List** shall be either (a) if the **Contractor** approves the final punch list and proposed dates for completion furnished by the **Engineer**, the date of the **Contractor**'s approval; or (b) if the **Contractor** neither accepts the dates nor proposes alternative dates, ten (10) **Days** after the **Engineer** furnishes the **Contractor** with a final punch list and proposed dates for completion; or (c) if the **Contractor** proposes alternative dates, the date that the **Engineer** sends written notification to the **Contractor** either approving the **Contractor**'s proposed alternative dates or establishing dates for the completion for each item of **Work**.

14.4 Determining the Date of **Final Acceptance**: The **Work** will be accepted as final and complete as of the date of the **Engineer's** inspection if, upon such inspection, the **Engineer** finds that all items on the **Final Approved Punch List** are complete and no further **Work** remains to be done. The **Commissioner** will then issue a written determination of **Final Acceptance**.

14.5 Request for Inspection: Inspection of the **Work** by the **Engineer** for the purpose of **Substantial Completion** or **Final Acceptance** shall be made within ten (10) **Days** after receipt of the **Contractor's** written request therefor.

14.6 Request for Re-inspection: If upon inspection for the purpose of **Substantial Completion** or **Final Acceptance**, the **Engineer** determines that there are items of **Work** still to be performed, the **Contractor** shall promptly perform them and then request a re-inspection. If upon re-inspection, the **Engineer** determines that the **Work** is substantially complete or finally accepted, the date of such re-inspection shall be the date of **Substantial Completion** or **Final Acceptance**. Re-inspection by the **Engineer** shall be made within ten (10) **Days** after receipt of the **Contractor's** written request therefor.

14.7 Initiation of Inspection by the **Engineer**: If the **Contractor** does not request inspection or re-inspection of the **Work** for the purpose of **Substantial Completion** or **Final Acceptance**, the **Engineer** may initiate such inspection or re-inspection.

ARTICLE 15. LIQUIDATED DAMAGES

15.1 In the event the **Contractor** fails to substantially complete the **Work** within the time fixed for such **Substantial Completion** in Schedule A of the General Conditions, plus authorized time extensions, or if the **Contractor**, in the sole determination of the **Commissioner**, has abandoned the **Work**, the **Contractor** shall pay to the **City** the sum fixed in Schedule A of the General Conditions, for each and every **Day** that the time consumed in substantially completing the **Work** exceeds the time allowed therefor; which said sum, in view of the difficulty of accurately ascertaining the loss which the **City** will suffer by reason of delay in the **Substantial Completion** of the **Work** hereunder, is hereby fixed and agreed as the liquidated damages that the **City** will suffer by reason of such delay, and not as a penalty. This Article 15 shall also apply to the **Contractor** whether or not the **Contractor** is defaulted pursuant to Chapter X of this **Contract**. Neither the failure to assess liquidated damages nor the granting of any time extension shall operate as a waiver or release of any claim the **City** may have against the **Contractor** for either actual or liquidated damages.

15.2 Liquidated damages received hereunder are not intended to be nor shall they be treated as either a partial or full waiver or discharge of the **City's** right to indemnification, or the **Contractor's** obligation to indemnify the **City**, or to any other remedy provided for in this **Contract** or by **Law**.

15.3 The **Commissioner** may deduct and retain out of the monies which may become due hereunder, the amount of any such liquidated damages; and in case the amount which may become due hereunder shall be less than the amount of liquidated damages suffered by the **City**, the **Contractor** shall be liable to pay the difference.

ARTICLE 16. OCCUPATION OR USE PRIOR TO COMPLETION

16.1 Unless otherwise provided for in the **Specifications**, the **Commissioner** may take over, use, occupy or operate any part of the **Work** at any time prior to **Final Acceptance**, upon written notification to the **Contractor**. The **Engineer** shall inspect the part of the **Work** to be taken over, used, occupied, or operated, and will furnish the **Contractor** with a written statement of the **Work**, if any, which remains to be performed on such part. The **Contractor** shall not object to, nor interfere with, the **Commissioner's** decision to exercise the rights granted by Article 16. In the event the **Commissioner** takes over, uses, occupies, or operates any part of the **Work:**

16.1.1 the **Engineer** shall issue a written determination of **Substantial Completion** with respect to such part of the **Work**;

16.1.2 the **Contractor** shall be relieved of its absolute obligation to protect such part of the unfinished **Work** in accordance with Article 7;

16.1.3 the **Contractor's** guarantee on such part of the **Work** shall begin on the date of such use by the **City**; and;

16.1.4 the **Contractor** shall be entitled to a return of so much of the amount retained in accordance with Article 21 as it relates to such part of the **Work**, except so much thereof as may be retained under Articles 24 and 44.

CHAPTER IV
SUBCONTRACTS AND ASSIGNMENTS

ARTICLE 17. SUBCONTRACTS

17.1 The **Contractor** shall not make subcontracts totaling an amount more than the percentage of the total **Contract** price fixed in Schedule A of the General Conditions, without prior written permission from the **Commissioner**. All subcontracts made by the **Contractor** shall be in writing. No **Work** may be performed by a **Subcontractor** prior to the **Contractor** entering into a written subcontract with the **Subcontractor** and complying with the provisions of this Article 17.

17.2 Before making any subcontracts, the **Contractor** shall submit a written statement to the **Commissioner** giving the name and address of the proposed **Subcontractor**; the portion of the **Work** and materials which it is to perform and furnish; the cost of the subcontract; the VENDEX questionnaire if required; the proposed subcontract if requested by the **Commissioner**; and any other information tending to prove that the proposed **Subcontractor** has the necessary facilities, skill, integrity, past experience, and financial resources to perform the **Work** in accordance with the terms and conditions of this **Contract**.

17.3 In addition to the requirements in Article 17.2, **Contractor** is required to list the **Subcontractor** in the web based Subcontractor Reporting System through the City's Payee Information Portal (PIP), available at www.nyc.gov/pip.[1] For each **Subcontractor** listed, **Contractor** is required to provide the following information: maximum contract value, description of **Subcontractor's** Work, start and end date of the subcontract and identification of the **Subcontractor**'s industry. Thereafter, **Contractor** will be required to report in the system the payments made to each **Subcontractor** within 30 days of making the payment. If any of the required information changes throughout the Term of the **Contract**, **Contractor** will be required to revise the information in the system.

Failure of the **Contractor** to list a **Subcontractor** and/or to report **Subcontractor** payments in a timely fashion may result in the **Commissioner** declaring the **Contractor** in default of the **Contract** and will subject **Contractor** to liquidated damages in the amount of $100 per day for each day that the **Contractor** fails to identify a **Subcontractor** along with the required information about the **Subcontractor** and/or fails to report payments to a **Subcontractor**, beyond the time frames set forth herein or in the notice from the **City**. Article 15 shall govern the issue of liquidated damages.

[1] In order to use the new system, a PIP account will be required. Detailed instructions on creating a PIP account and using the new system are also available at www.nyc.gov/pip. Additional assistance with PIP may be obtained by emailing the Financial Information Services Agency Help Desk at pip@fisa.nyc.gov.

17.4 If an approved **Subcontractor** elects to subcontract any portion of its subcontract, the proposed sub-subcontract shall be submitted in the same manner as directed above.

17.5 The **Commissioner** will notify the **Contractor** in writing whether the proposed **Subcontractor** is approved. If the proposed **Subcontractor** is not approved, the **Contractor** may submit another proposed **Subcontractor** unless the **Contractor** decides to do the **Work**. No **Subcontractor** shall be permitted to enter or perform any work on the **Site** unless approved.

17.6 Before entering into any subcontract hereunder, the **Contractor** shall provide the proposed **Subcontractor** with a complete copy of this document and inform the proposed **Subcontractor** fully and completely of all provisions and requirements of this **Contract** relating either directly or indirectly to the **Work** to be performed and the materials to be furnished under such subcontract, and every such **Subcontractor** shall expressly stipulate that all labor performed and materials furnished by the **Subcontractor** shall strictly comply with the requirements of this **Contract**.

17.7 Documents given to a prospective **Subcontractor** for the purpose of soliciting the **Subcontractor's** bid shall include either a copy of the bid cover or a separate information sheet setting forth the **Project** name, the **Contract** number (if available), the **Agency** (as noted in Article 2.1.6), and the **Project's** location.

17.8 The **Commissioner's** approval of a **Subcontractor** shall not relieve the **Contractor** of any of its responsibilities, duties, and liabilities hereunder. The **Contractor** shall be solely responsible to the **City** for the acts or defaults of its **Subcontractor** and of such **Subcontractor's** officers, agents, and employees, each of whom shall, for this purpose, be deemed to be the agent or employee of the **Contractor** to the extent of its subcontract.

17.9 If the **Subcontractor** fails to maintain the necessary facilities, skill, integrity, past experience, and financial resources (other than due to the **Contractor's** failure to make payments where required) to perform the **Work** in accordance with the terms and conditions of this **Contract**, the **Contractor** shall promptly notify the **Commissioner** and replace such **Subcontractor** with a newly approved **Subcontractor** in accordance with this Article 17.

17.10 The **Contractor** shall be responsible for ensuring that all **Subcontractors** performing **Work** at the **Site** maintain all insurance required by **Law**.

17.11 The **Contractor** shall promptly, upon request, file with the **Engineer** a conformed copy of the subcontract and its cost. The subcontract shall provide the following:

17.11.1 Payment to **Subcontractors**: The agreement between the **Contractor** and its **Subcontractor** shall contain the same terms and conditions as to method of payment for **Work**, labor, and materials, and as to retained percentages, as are contained in this **Contract**.

17.11.2 Prevailing Rate of Wages: The agreement between the **Contractor** and its **Subcontractor** shall include the prevailing wage rates and supplemental benefits to be paid in accordance with Labor Law Section 220.

17.11.3 Section 6-123 of the Administrative Code: Pursuant to the requirements of Section 6-123 of the Administrative Code, every agreement between the **Contractor** and a **Subcontractor** in excess of fifty thousand ($50,000) dollars shall include a provision that the **Subcontractor** shall not engage in any unlawful discriminatory practice as defined in Title VIII of the Administrative Code (Section 8-101 *et seq.*).

17.11.4 All requirements required pursuant to federal and/or state grant agreement(s), if applicable to the **Work**.

17.12 The **Commissioner** may deduct from the amounts certified under this **Contract** to be due to the **Contractor**, the sum or sums due and owing from the **Contractor** to the **Subcontractors** according to the terms of the said subcontracts, and in case of dispute between the **Contractor** and its **Subcontractor**, or **Subcontractors**, as to the amount due and owing, the **Commissioner** may deduct and withhold from the amounts certified under this **Contract** to be due to the **Contractor** such sum or sums as may be claimed by such **Subcontractor**, or **Subcontractors**, in a sworn affidavit, to be due and owing until such time as such claim or claims shall have been finally resolved.

17.13 On contracts where performance bonds and payment bonds are executed, the **Contractor** shall include on each requisition for payment the following data: **Subcontractor's** name, value of the subcontract, total amount previously paid to **Subcontractor** for **Work** previously requisitioned, and the amount, including retainage, to be paid to the **Subcontractor** for **Work** included in the requisition.

17.14 On **Contracts** where performance bonds and payment bonds are not executed, the **Contractor** shall include with each requisition for payment submitted hereunder, a signed statement from each and every **Subcontractor** and/or **Materialman** for whom payment is requested in such requisition. Such signed statement shall be on the letterhead of the **Subcontractor** and/or **Materialman** for whom payment is requested and shall (i) verify that such **Subcontractor** and/or **Materialman** has been paid in full for all **Work** performed and/or material supplied to date, exclusive of any amount retained and any amount included on the current requisition, and (ii) state the total amount of retainage to date, exclusive of any amount retained on the current requisition.

ARTICLE 18. ASSIGNMENTS

18.1 The **Contractor** shall not assign, transfer, convey or otherwise dispose of this **Contract**, or the right to execute it, or the right, title or interest in or to it or any part thereof, or assign, by power of attorney or otherwise any of the monies due or to become due under this **Contract**, unless the previous written consent of the **Commissioner** shall first be obtained thereto, and the giving of any such consent to a particular assignment shall not dispense with the necessity of such consent to any further or other assignments.

18.2 Such assignment, transfer, conveyance or other disposition of this **Contract** shall not be valid until filed in the office of the **Commissioner** and the **Comptroller**, with the written consent of the **Commissioner** endorsed thereon or attached thereto.

18.3 Failure to obtain the previous written consent of the **Commissioner** to such an assignment, transfer, conveyance or other disposition, may result in the revocation and annulment of this **Contract**. The **City** shall thereupon be relieved and discharged from any further liability to the **Contractor**, its assignees, transferees or sublessees, who shall forfeit and lose all monies therefor earned under the **Contract**, except so much as may be required to pay the **Contractor's** employees.

18.4 The provisions of this clause shall not hinder, prevent, or affect an assignment by the **Contractor** for the benefit of its creditors made pursuant to the **Laws** of the State of New York.

18.5 This **Contract** may be assigned by the **City** to any corporation, agency or instrumentality having authority to accept such assignment.

CHAPTER V
CONTRACTOR'S SECURITY AND GUARANTEE

ARTICLE 19. SECURITY DEPOSIT

19.1 If performance and payment bonds are required, the **City** shall retain the bid security to ensure that the successful bidder executes the **Contract** and furnishes the required payment and performance security within ten (10) **Days** after notice of the award of the **Contract**. If the successful bidder fails to execute the **Contract** and furnish the required payment and performance security, the **City** shall retain such bid security as set forth in the Information for Bidders. If the successful bidder executes the **Contract** and furnishes the required payment and performance security, the **City** shall return the bid security within a reasonable time after the furnishing of such bonds and execution of the **Contract** by the **City**.

19.2 If performance and payment bonds are not required, the bid security shall be retained by the **City** as security for the **Contractor**'s faithful performance of the **Contract**. If partial payments are provided, the bid security will be returned to the **Contractor** after the sum retained under Article 21 equals the amount of the bid security, subject to other provisions of this **Contract**. If partial payments are not provided, the bid security will be released when final payment is certified by the **City** for payment.

19.3 If the **Contractor** is declared in default under Article 48 prior to the return of the deposit, or if any claim is made such as referred to in Article 23, the amount of such deposit, or so much thereof as the **Comptroller** may deem necessary, may be retained and then applied by the **Comptroller**:

19.3.1 To compensate the **City** for any expense, loss or damage suffered or incurred by reason of or resulting from such default, including the cost of re-letting and liquidated damages; or

19.3.2 To indemnify the **City** against any and all claims.

ARTICLE 20. PAYMENT GUARANTEE

20.1 On **Contracts** where one hundred (100%) percent performance bonds and payment bonds are executed, this Article 20 does not apply.

20.2 In the event the terms of this **Contract** do not require the **Contractor** to provide a payment bond or where the **Contract** does not requite a payment bond for one hundred (100%) percent of the **Contract** price, the **City** shall, in accordance with the terms of this Article 20, guarantee payment of all lawful claims for:

20.2.1 Wages and compensation for labor performed and/or services rendered; and

20.2.2 Materials, equipment, and supplies provided, whether incorporated into the **Work** or not, when demands have been filed with the **City** as provided hereinafter by any person, firm, or corporation which furnished labor, material, equipment, supplies, or any combination thereof, in connection with the **Work** performed hereunder (hereinafter referred to as the "beneficiary") at the direction of the **City** or the **Contractor**.

20.3 The provisions of Article 20.2 are subject to the following limitations and conditions:

20.3.1 If the **Contractor** provides a payment bond for a value that is less than one hundred (100%) percent of the value of the **Contract Work**, the payment bond provided by the **Contractor** shall be primary (and non-contributing) to the payment guarantee provided under this Article 20.

20.3.2 The guarantee is made for the benefit of all beneficiaries as defined in Article 20.2 provided that those beneficiaries strictly adhere to the terms and conditions of Article 20.3.4 and 20.3.5.

20.3.3 Nothing in this Article 20 shall prevent a beneficiary providing labor, services or material for the **Work** from suing the **Contractor** for any amounts due and owing the beneficiary by the **Contractor**.

20.3.4 Every person who has furnished labor or material, to the **Contractor** or to a **Subcontractor** of the **Contractor**, in the prosecution of the **Work** and who has not been paid in full therefor before the expiration of a period of ninety (90) **Days** after the date on which the last of the labor was performed or material was furnished by him/her for which the claim is made, shall have the right to sue on this payment guarantee in his/her own name for the amount, or the balance thereof, unpaid at the time of commencement of the action; provided, however, that a person having a direct contractual relationship with a **Subcontractor** of the **Contractor** but no contractual relationship express or implied with the **Contractor** shall not have a right of action upon the guarantee unless he/she shall have given written notice to the **Contractor** within one hundred twenty (120) **Days** from the date on which the last of the labor was performed or the last of the material was furnished, for which his/her claim is made, stating with substantial accuracy the amount claimed and the name of the party to whom the material was furnished or for whom the labor was performed. The notice shall be served by delivering the same personally to the **Contractor** or by mailing the same by registered mail, postage prepaid, in an envelope addressed to the **Contractor** at any place where it maintains an office or conducts its business; provided, however, that where such notice is actually received by the **Contractor** by other means, such notice shall be deemed sufficient.

20.3.5 Except as provided in Labor Law Section 220-g, no action on this payment guarantee shall be commenced after the expiration of the one-year limitations period set forth in Section 137(4)(b) of the State Finance Law.

20.3.6 The **Contractor** shall promptly forward to the **City** any notice or demand received pursuant to Article 20.3.4. The **Contractor** shall inform the **City** of any defenses to the notice or demand and shall forward to the **City** any documents the **City** requests concerning the notice or demand.

20.3.7 All demands made against the **City** by a beneficiary of this payment guarantee shall be presented to the **Engineer** along with all written documentation concerning the demand which the **Engineer** deems reasonably appropriate or necessary, which may include, but shall not be limited to: the subcontract; any invoices presented to the **Contractor** for payment; the notarized statement of the beneficiary that the demand is due and payable, that a request for payment has been made of the **Contractor** and that the demand has not been paid by the **Contractor** within the time allowed for such payment by the subcontract; and copies of any correspondence between the beneficiary and the **Contractor** concerning such demand. The **City** shall notify the **Contractor** that a demand has been made. The **Contractor** shall inform the **City** of any defenses to the demand and shall forward to the **City** any documents the **City** requests concerning the demand.

20.3.8 The **City** shall make payment only if, after considering all defenses presented by the **Contractor**, it determines that the payment is due and owing to the beneficiary making the demand.

20.3.9 No beneficiary shall be entitled to interest from the **City**, or to any other costs, including, but not limited to, attorneys' fees, except to the extent required by State Finance Law Section 137.

20.4 Upon the receipt by the **City** of a demand pursuant to this Article 20, the **City** may withhold from any payment otherwise due and owing to the **Contractor** under this **Contract** an amount sufficient to satisfy the demand.

20.4.1 In the event the **City** determines that the demand is valid, the **City** shall notify the **Contractor** of such determination and the amount thereof and direct the **Contractor** to immediately pay such amount to the beneficiary. In the event the **Contractor**, within seven (7) **Days** of receipt of such notification from the **City**, fails to pay the beneficiary, such failure shall constitute an automatic and irrevocable assignment of payment by the **Contractor** to the beneficiary for the amount of the demand determined by the **City** to be valid. The **Contractor**, without further notification or other process, hereby gives its unconditional consent to such assignment of payment to the beneficiary and authorizes the **City**, on its behalf, to take all necessary actions to implement such assignment of payment, including without limitation the execution of any instrument or documentation necessary to effectuate such assignment.

20.4.2In the event that the amount otherwise due and owing to the **Contractor** by the **City** is insufficient to satisfy such demand, the **City** may, at its option, require payment from the **Contractor** of an amount sufficient to cover such demand and exercise any other right to require or recover payment which the **City** may have under **Law** or **Contract**.

20.4.3 In the event the **City** determines that the demand is invalid, any amount withheld pending the **City**'s review of such demand shall be paid to the **Contractor**; provided, however, no lien has been filed. In the event a claim or an action has been filed, the terms and conditions set forth in Article 23 shall apply. In the event a lien has been filed, the parties will be governed by the provisions of the Lien Law of the State of New York.

20.5 The provisions of this Article 20 shall not prevent the **City** and the **Contractor** from resolving disputes in accordance with the **PPB** Rules, where applicable.

20.6 In the event the **City** determines that the beneficiary is entitled to payment pursuant to this Article 20, such determination and any defenses and counterclaims raised by the **Contractor** shall be taken into account in evaluating the **Contractor's** performance.

20.7 Nothing in this Article 20 shall relieve the **Contractor** of the obligation to pay the claims of all persons with valid and lawful claims against the **Contractor** relating to the **Work**.

20.8 The **Contractor** shall not require any performance, payment or other bonds of any **Subcontractor** if this **Contract** does not require such bonds of the **Contractor**.

20.9 The payment guarantee made pursuant to this Article 20 shall be construed in a manner consistent with Section 137 of the State Finance Law and shall afford to persons furnishing labor or materials to the **Contractor** or its **Subcontractors** in the prosecution of the **Work** under this **Contract** all of the rights and remedies afforded to such persons by such section, including but not limited to, the right

to commence an action against the **City** on the payment guarantee provided by this Article 20 within the one-year limitations period set forth in Section 137(4)(b).

ARTICLE 21. RETAINED PERCENTAGE

21.1 If this **Contract** requires one hundred (100%) percent performance and payment security, then as further security for the faithful performance of this **Contract**, the **Commissioner** shall deduct, and retain until the substantial completion of the **Work**, five (5%) percent of the value of **Work** certified for payment in each partial payment voucher.

21.2 If this **Contract** does not require one hundred (100%) percent performance and payment security and if the price for which this **Contract** was awarded does not exceed one million ($1,000,000) dollars, then as further security for the faithful performance of this **Contract**, the **Commissioner** shall deduct, and retain until the substantial completion of the **Work**, five (5%) percent of the value of **Work** certified for payment in each partial payment voucher.

21.3 If this **Contract** does not require one hundred (100%) percent performance and payment security and if the price for which this **Contract** was awarded exceeds one million ($1,000,000) dollars, then as further security for the faithful performance of this **Contract,** the **Commissioner** shall deduct, and retain until the substantial completion of the **Work**, up to ten (10%) percent of the value of **Work** certified for payment in each partial payment voucher. The percentage to be retained is set forth in Schedule A of the General Conditions.

ARTICLE 22. INSURANCE

22.1 Types of Insurance: The **Contractor** shall procure and maintain the following types of insurance if, and as indicated, in Schedule A of the General Conditions (with the minimum limits and special conditions specified in Schedule A). Such insurance shall be maintained from the date the **Contractor** is required to provide Proof of Insurance pursuant to Article 22.3.1 through the date of completion of all required **Work** (including punch list work as certified in writing by the **Resident Engineer**), except for insurance required pursuant to Article 22.1.4, which may terminate upon **Substantial Completion** of the **Contract**. All insurance shall meet the requirements set forth in this Article 22. Wherever this Article requires that insurance coverage be "at least as broad" as a specified form (including all ISO forms), there is no obligation that the form itself be used, provided that the **Contractor** can demonstrate that the alternative form or endorsement contained in its policy provides coverage at least as broad as the specified form.

22.1.1 Commercial General Liability Insurance: The **Contractor** shall provide Commercial General Liability Insurance covering claims for property damage and/or bodily injury, including death, which may arise from any of the operations under this **Contract**. Coverage under this insurance shall be at least as broad as that provided by the latest edition of Insurance Services Office ("ISO") Form CG 0001. Such insurance shall be "occurrence" based rather than "claims-made" and include, without limitation, the following types of coverage: premises operations; products and completed operations; contractual liability (including the tort liability of another assumed in a contract); broad form property damage; independent contractors; explosion, collapse and underground (XCU); construction means and methods; and incidental malpractice. Such insurance shall contain a "per project" aggregate limit, as specified in Schedule A, that applies separately to operations under this **Contract**.

22.1.1(a) Such Commercial General Liability Insurance shall name the **City** as an Additional Insured. Coverage for the City shall specifically include the **City's** officials and employees, be at least as broad as the latest edition of ISO Form CG 20 10 and provide completed operations coverage at least as broad as the latest edition of ISO Form CG 20 37.

22.1.1(b) Such Commercial General Liability Insurance shall name all other entities designated as additional insureds in Schedule A but only for claims arising from the **Contractor's** operations under this **Contract**, with coverage at least as broad as the latest edition of ISO Form CG 20 26.

22.1.1(c) If the **Work** requires a permit from the Department of Buildings pursuant to 1 RCNY Section 101-08, at http://www.nyc.gov/html/dob/downloads/rules/1_RCNY_101-08.pdf, the **Contractor** shall provide Commercial General Liability Insurance with limits of at least those required by 1 RCNY section 101-08. If the **Work** does not require such a permit, the minimum limits shall be those provided for in Schedule A.

22.1.1(d) If any of the **Work** includes repair of a waterborne vessel owned by or to be delivered to the **City**, such Commercial General Liability shall include, or be endorsed to include, Ship Repairer's Legal Liability Coverage to protect against, without limitation, liability arising from navigation of such vessels prior to delivery to and acceptance by the **City**.

22.1.2 Workers' Compensation Insurance, Employers' Liability Insurance, and Disability Benefits Insurance: The **Contractor** shall provide, and shall cause its **Subcontractors** to provide, Workers Compensation Insurance, Employers' Liability Insurance, and Disability Benefits Insurance in accordance with the **Laws** of the State of New York on behalf of all employees providing services under this **Contract** (except for those employees, if any, for which the **Laws** require insurance only pursuant to Article 22.1.3).

22.1.3 United States Longshoremen's and Harbor Workers Act and/or Jones Act Insurance: If specified in Schedule A of the General Conditions or if required by **Law**, the **Contractor** shall provide insurance in accordance with the United States Longshoremen's and Harbor Workers Act and/or the Jones Act, on behalf of all qualifying employees providing services under this **Contract**.

22.1.4 Builders Risk Insurance: If specified in Schedule A of the General Conditions, the **Contractor** shall provide Builders Risk Insurance on a completed value form for the total value of the **Work** through **Substantial Completion** of the **Work** in its entirety. Such insurance shall be provided on an All Risk basis and include coverage, without limitation, for windstorm (including named windstorm), storm surge, flood and earth movement. Unless waived by the **Commissioner**, it shall include coverage for ordinance and law, demolition and increased costs of construction, debris removal, pollutant clean up and removal, and expediting costs. Such insurance shall cover, without limitation, (a) all buildings and/or structures involved in the **Work**, as well as temporary structures at the **Site**, and (b) any property that is intended to become a permanent part of such building or structure, whether such property is on the **Site**, in transit or in temporary storage. Policies shall name the **Contractor** as Named Insured and list the **City** as both an Additional Insured and a Loss Payee as its interest may appear.

22.1.4(a) Policies of such insurance shall specify that, in the event a loss occurs at an occupied facility, occupancy of such facility is permitted without the consent of the issuing insurance company.

22.1.4(b) Such insurance may be provided through an Installation Floater, at the **Contractor's** option, if it otherwise conforms with the requirements of this Article 22.1.4.

22.1.5 Commercial Automobile Liability Insurance: The **Contractor** shall provide Commercial Automobile Liability Insurance for liability arising out of ownership, maintenance or use of any owned (if any), non-owned and hired vehicles to be used in connection with this **Contract**. Coverage shall be at least as broad as the latest edition of ISO Form CA0001. If vehicles are used for transporting hazardous materials, the Automobile Liability Insurance shall be endorsed to provide pollution liability broadened coverage for covered vehicles (endorsement CA 99 48) as well as proof of MCS 90.

22.1.6 Contractors Pollution Liability Insurance: If specified in Schedule A of the General Conditions, the **Contractor** shall maintain, or cause the **Subcontractor** doing such **Work** to maintain, Contractors Pollution Liability Insurance covering bodily injury and property damage. Such insurance shall provide coverage for actual, alleged or threatened emission, discharge, dispersal, seepage, release or escape of pollutants (including asbestos), including any loss, cost or expense incurred as a result of any cleanup of pollutants (including asbestos) or in the investigation, settlement or defense of any claim, action, or proceedings arising from the operations under this **Contract**. Such insurance shall be in the **Contractor's** name and list the **City** as an Additional Insured and any other entity specified in Schedule A. Coverage shall include, without limitation, (a) loss of use of damaged property or of property that has not been physically injured, (b) transportation, and (c) non-owned disposal sites.

22.1.6(a) Coverage for the **City** as Additional Insured shall specifically include the **City's** officials and employees and be at least as broad as provided to the **Contractor** for this **Project**.

22.1.6(b) If such insurance is written on a claims-made policy, such policy shall have a retroactive date on or before the effective date of this **Contract**, and continuous coverage shall be maintained, or an extended discovery period exercised, for a period of not less than three (3) years from the time the **Work** under this **Contract** is completed.

22.1.7 Marine Insurance:

22.1.7(a) Marine Protection and Indemnity Insurance: If specified in Schedule A of the General Conditions or if the **Contractor** engages in marine operations in the execution of any part of the **Work**, the **Contractor** shall maintain, or cause the **Subcontractor** doing such Work to maintain, Marine Protection and Indemnity Insurance with coverage at least as broad as Form SP-23. The insurance shall provide coverage for the **Contractor** or **Subcontractor** (whichever is doing this **Work**) and for the **City** (together with its officials and employees) and any other entity specified in Schedule A as an Additional Insured for bodily injury and property damage arising from marine operations under this **Contract**. Coverage shall include, without limitation, injury or death of crew members (if not fully provided through other insurance), removal of wreck, damage to piers, wharves and other fixed or floating objects and loss of or damage to any other vessel or craft, or to property on such other vessel or craft.

22.1.7(b) Hull and Machinery Insurance: If specified in Schedule A of the General Conditions or if the **Contractor** engages in marine operations in the execution of any part of the **Work**, the **Contractor** shall maintain, or cause the **Subcontractor** doing such **Work** to maintain, Hull and Machinery Insurance with coverage for the **Contractor** or **Subcontractor** (whichever is doing this Work) and for the **City** (together with its officials and employees) as Additional Insured at least as broad as the latest edition of American Institute Tug Form for all tugs used under this **Contract** and Collision Liability at least as broad as the latest edition of American Institute Hull Clauses.

22.1.7(c) Marine Pollution Liability Insurance: If specified in Schedule A of the General Conditions or if the **Contractor** engages in marine operations in the execution of any part of the **Work**, the **Contractor** shall maintain, or cause the **Subcontractor** doing such Work to maintain, Marine Pollution Liability Insurance covering itself (or the Subcontractor doing such Work) as Named Insured and the **City** (together with its officials and employees) and any other entity specified in Schedule A as an Additional Insured. Coverage shall be at least as broad as that provided by the latest edition of Water Quality Insurance Syndicate Form and include, without limitation, liability arising from the discharge or substantial threat of a discharge of oil, or from the release or threatened release of a hazardous substance including injury to, or economic losses resulting from, the destruction of or damage to real property, personal property or natural resources.

22.1.8 The **Contractor** shall provide such other types of insurance, at such minimum limits and with such conditions, as are specified in Schedule A of the General Conditions.

22.2 General Requirements for Insurance Coverage and Policies:

22.2.1 All required insurance policies shall be maintained with companies that may lawfully issue the required policy and have an A.M. Best rating of at least A-/VII or a Standard and Poor's rating of at least A, unless prior written approval is obtained from the **City** Corporation Counsel.

22.2.2 The **Contractor** shall be solely responsible for the payment of all premiums for all required policies and all deductibles and self-insured retentions to which such policies are subject, whether or not the **City** is an insured under the policy.

22.2.3 In his/her sole discretion, the **Commissioner** may, subject to the approval of the **Comptroller** and the **City** Corporation Counsel, accept Letters of Credit and/or custodial accounts in lieu of required insurance.

22.2.4 The **City's** limits of coverage for all types of insurance required pursuant to Schedule A of the General Conditions shall be the greater of (i) the minimum limits set forth in Schedule A or (ii) the limits provided to the **Contractor** as Named Insured under all primary, excess, and umbrella policies of that type of coverage.

22.2.5 The **Contractor** may satisfy its insurance obligations under this Article 22 through primary policies or a combination of primary and excess/umbrella policies, so long as all policies provide the scope of coverage required herein.

22.2.6 Policies of insurance provided pursuant to this Article 22 shall be primary and non-contributing to any insurance or self-insurance maintained by the **City**.

22.3 Proof of Insurance:

22.3.1 For all types of insurance required by Article 22.1 and Schedule A, except for insurance required by Articles 22.1.4 and 22.1.7, the **Contractor** shall file proof of insurance in accordance with this Article 22.3 within ten (10) **Days** of award. For insurance provided pursuant to Articles 22.1.4 and 22.1.7, proof shall be filed by a date specified by the **Commissioner** or ten (10) **Days** prior to the commencement of the portion of the **Work** covered by such policy, whichever is earlier.

22.3.2 For Workers' Compensation Insurance provided pursuant to Article 22.1.2, the **Contractor** shall submit one of the following forms: C-105.2 Certificate of Workers' Compensation Insurance; U-26.3 - State Insurance Fund Certificate of Workers' Compensation Insurance; Request for WC/DB Exemption (Form CE-200); equivalent or successor forms used by the New York State Workers' Compensation Board; or other proof of insurance in a form acceptable to the **Commissioner**. For Disability Benefits Insurance provided pursuant to Article 22.1.2, the Contractor shall submit DB-120.1 - Certificate Of Insurance Coverage Under The NYS Disability Benefits Law, Request for WC/DB Exemption (Form CE-200); equivalent or successor forms used by the New York State Workers' Compensation Board; or other proof of insurance in a form acceptable to the **Commissioner**. ACORD forms are not acceptable.

22.3.3 For policies provided pursuant to all of Article 22.1 other than Article 22.1.2, the **Contractor** shall submit one or more Certificates of Insurance on forms acceptable to the **Commissioner**. All such Certificates of Insurance shall certify (a) the issuance and effectiveness of such policies of insurance, each with the specified minimum limits (b) for insurance secured pursuant to Article 22.1.1 that the **City** and any other entity specified in Schedule A is an Additional Insured with coverage at least as broad as the most recent edition of ISO Forms CG 20 10, CG 20 37, and CG 20 26, as applicable; (c) in the event insurance is required pursuant to Article 22.1.6 and/or Article 22.1.7, that the City is an Additional Insured thereunder; (d) the company code issued to the insurance company by the National Association of Insurance Commissioners (the NAIC number); and (e) the number assigned to the **Contract** by the **City**. All such Certificates of Insurance shall be accompanied by either a duly executed "Certification by Broker" in the form contained in Part III of Schedule A or copies of all policies referenced in such Certificate of Insurance as certified by an authorized representative of the issuing insurance carrier. If any policy is not available at the time of submission, certified binders may be submitted until such time as the policy is available, at which time a certified copy of the policy shall be submitted.

22.3.4 Documentation confirming renewals of insurance shall be submitted to the **Commissioner** prior to the expiration date of coverage of policies required under this **Contract**. Such proofs of insurance shall comply with the requirements of Articles 22.3.2 and 22.3.3.

22.3.5 The **Contractor** shall be obligated to provide the **City** with a copy of any policy of insurance provided pursuant to this Article 22 upon the demand for such policy by the **Commissioner** or the **City** Corporation Counsel.

22.4 Operations of the **Contractor**:

22.4.1 The **Contractor** shall not commence the **Work** unless and until all required certificates have been submitted to and accepted by the **Commissioner**. Acceptance by the **Commissioner** of a certificate does not excuse the **Contractor** from securing insurance

consistent with all provisions of this Article 22 or of any liability arising from its failure to do so.

22.4.2 The **Contractor** shall be responsible for providing continuous insurance coverage in the manner, form, and limits required by this **Contract** and shall be authorized to perform **Work** only during the effective period of all required coverage.

22.4.3 In the event that any of the required insurance policies lapse, are revoked, suspended or otherwise terminated, for whatever cause, the **Contractor** shall immediately stop all **Work**, and shall not recommence **Work** until authorized in writing to do so by the **Commissioner**. Upon quitting the **Site**, except as otherwise directed by the **Commissioner**, the **Contractor** shall leave all plant, materials, equipment, tools, and supplies on the **Site**. **Contract** time shall continue to run during such periods and no extensions of time will be granted. The **Commissioner** may also declare the **Contractor** in default for failure to maintain required insurance.

22.4.4 In the event the **Contractor** receives notice, from an insurance company or other person, that any insurance policy required under this Article 22 shall be cancelled or terminated (or has been cancelled or terminated) for any reason, the **Contractor** shall immediately forward a copy of such notice to both the **Commissioner** and the New York City Comptroller, attn: Office of Contract Administration, Municipal Building, One Centre Street, room 1005, New York, New York 10007. Notwithstanding the foregoing, the **Contractor** shall ensure that there is no interruption in any of the insurance coverage required under this Article 22.

22.4.5 Where notice of loss, damage, occurrence, accident, claim or suit is required under an insurance policy maintained in accordance with this Article 22, the **Contractor** shall notify in writing all insurance carriers that issued potentially responsive policies of any such event relating to any operations under this **Contract** (including notice to Commercial General Liability insurance carriers for events relating to the **Contractor**'s own employees) no later than 20 days after such event. For any policy where the **City** is an Additional Insured, such notice shall expressly specify that "this notice is being given on behalf of the City of New York as Insured as well as the Named Insured." Such notice shall also contain the following information: the number of the insurance policy, the name of the named insured, the date and location of the damage, occurrence, or accident, and the identity of the persons or things injured, damaged or lost. The **Contractor** shall simultaneously send a copy of such notice to the City of New York c/o Insurance Claims Specialist, Affirmative Litigation Division, New York City Law Department, 100 Church Street, New York, New York 10007.

22.4.6 In the event of any loss, accident, claim, action, or other event that does or can give rise to a claim under any insurance policy required under this Article 22, the **Contractor** shall at all times fully cooperate with the **City** with regard to such potential or actual claim.

22.5 **Subcontractor** Insurance: In the event the **Contractor** requires any **Subcontractor** to procure insurance with regard to any operations under this **Contract** and requires such **Subcontractor** to name the **Contractor** as an **Additional Insured** thereunder, the **Contractor** shall ensure that the **Subcontractor** name the **City**, including its officials and employees, as an Additional Insured with coverage at least as broad as the most recent edition of ISO Form CG 20 26.

22.6 Wherever reference is made in Article 7 or this Article 22 to documents to be sent to the **Commissioner** (e.g., notices, filings, or submissions), such documents shall be sent to the address set forth in Schedule A of the General Conditions. In the event no address is set forth in Schedule A, such documents are to be sent to the **Commissioner's** address as provided elsewhere in this **Contract**.

22.7 Apart from damages or losses covered by insurance provided pursuant to Articles 22.1.2, 22.1.3, or 22.1.5, the **Contractor** waives all rights against the **City**, including its officials and employees, for any damages or losses that are covered under any insurance required under this Article 22 (whether or not such insurance is actually procured or claims are paid thereunder) or any other insurance applicable to the operations of the **Contractor** and/or its employees, agents, or **Subcontractors**.

22.8 In the event the **Contractor** utilizes a self-insurance program to satisfy any of the requirements of this Article 22, the **Contractor** shall ensure that any such self-insurance program provides the **City** with all rights that would be provided by traditional insurance under this Article 22, including but not limited to the defense and indemnification obligations that insurers are required to undertake in liability policies.

22.9 Materiality/Non-Waiver: The **Contractor's** failure to secure policies in complete conformity with this Article 22, or to give an insurance company timely notice of any sort required in this **Contract** or to do anything else required by this Article 22 shall constitute a material breach of this **Contract**. Such breach shall not be waived or otherwise excused by any action or inaction by the **City** at any time.

22.10 Pursuant to General Municipal Law Section 108, this **Contract** shall be void and of no effect unless **Contractor** maintains Workers' Compensation Insurance for the term of this **Contract** to the extent required and in compliance with the New York State Workers' Compensation Law.

22.11 Other Remedies: Insurance coverage provided pursuant to this Article 22 or otherwise shall not relieve the **Contractor** of any liability under this **Contract**, nor shall it preclude the **City** from exercising any rights or taking such other actions available to it under any other provisions of this **Contract** or **Law**.

ARTICLE 23. MONEY RETAINED AGAINST CLAIMS

23.1 If any claim shall be made by any person or entity (including **Other Contractors** with the **City** on this **Project**) against the **City** or against the **Contractor** and the **City** for any of the following:

(a) An alleged loss, damage, injury, theft or vandalism of any of the kinds referred to in Articles 7 and 12, plus the reasonable costs of defending the **City**, which in the opinion of the **Comptroller** may not be paid by an insurance company (for any reason whatsoever); or

(b) An infringement of copyrights, patents or use of patented articles, tools, etc., as referred to in Article 57; or

(c) Damage claimed to have been caused directly or indirectly by the failure of the **Contractor** to perform the **Work** in strict accordance with this **Contract,**

the amount of such claim, or so much thereof as the **Comptroller** may deem necessary, may be withheld by the **Comptroller**, as security against such claim, from any money due hereunder. The **Comptroller**, in his/her discretion, may permit the **Contractor** to substitute other satisfactory security in lieu of the monies so withheld.

23.2 If an action on such claim is timely commenced and the liability of the **City**, or the **Contractor**, or both, shall have been established therein by a final judgment of a court of competent jurisdiction, or if such claim shall have been admitted by the **Contractor** to be valid, the **Comptroller**

shall pay such judgment or admitted claim out of the monies retained by the **Comptroller** under the provisions of this Article 23, and return the balance, if any, without interest, to the **Contractor**.

ARTICLE 24. MAINTENANCE AND GUARANTY

24.1 The **Contractor** shall promptly repair, replace, restore or rebuild, as the **Commissioner** may determine, any finished **Work** in which defects of materials or workmanship may appear or to which damage may occur because of such defects, during the one (1) year period subsequent to the date of **Substantial Completion** (or use and occupancy in accordance with Article 16), except where other periods of maintenance and guaranty are provided for in Schedule A.

24.2 As security for the faithful performance of its obligations hereunder, the **Contractor**, upon filing its requisition for payment on **Substantial Completion**, shall deposit with the **Commissioner** a sum equal to one (1%) percent of the price (or the amount fixed in Schedule A of the General Conditions) in cash or certified check upon a state or national bank and trust company or a check of such bank and trust company signed by a duly authorized officer thereof and drawn to the order of the **Comptroller**, or obligations of the **City**, which the **Comptroller** may approve as of equal value with the sum so required.

24.3 In lieu of the above, the **Contractor** may make such security payment to the **City** by authorizing the **Commissioner** in writing to deduct the amount from the **Substantial Completion** payment which shall be deemed the deposit required above.

24.4 If the **Contractor** has faithfully performed all of its obligations hereunder the **Commissioner** shall so certify to the **Comptroller** within five (5) **Days** after the expiration of one (1) year from the date of **Substantial Completion** and acceptance of the **Work** or within thirty (30) **Days** after the expiration of the guarantee period fixed in the **Specifications**. The security payment shall be repaid to the **Contractor** without interest within thirty (30) **Days** after certification by the **Commissioner** to the **Comptroller** that the **Contractor** has faithfully performed all of its obligations hereunder.

24.5 Notice by the **Commissioner** to the **Contractor** to repair, replace, rebuild or restore such defective or damaged **Work** shall be timely, pursuant to this article, if given not later than ten (10) **Days** subsequent to the expiration of the one (1) year period or other periods provided for herein.

24.6 If the **Contractor** shall fail to repair, replace, rebuild or restore such defective or damaged **Work** promptly after receiving such notice, the **Commissioner** shall have the right to have the **Work** done by others in the same manner as provided for in the completion of a defaulted **Contract**, under Article 51.

24.7 If the security payment so deposited is insufficient to cover the cost of such **Work**, the **Contractor** shall be liable to pay such deficiency on demand by the **Commissioner**.

24.8 The **Engineer's** certificate setting forth the fair and reasonable cost of repairing, replacing, rebuilding or restoring any damaged or defective **Work** when performed by one other than the **Contractor**, shall be binding and conclusive upon the **Contractor** as to the amount thereof.

24.9 The **Contractor** shall obtain all manufacturers' warranties and guaranties of all equipment and materials required by this **Contract** in the name of the **City** and shall deliver same to the **Commissioner**. All of the **City's** rights and title and interest in and to said manufacturers' warranties and guaranties may be assigned by the **City** to any subsequent purchasers of such equipment and materials or lessees of the premises into which the equipment and materials have been installed.

CHAPTER VI
CHANGES, EXTRA WORK, AND DOCUMENTATION OF CLAIM

ARTICLE 25. CHANGES

25.1 Changes may be made to this **Contract** only as duly authorized in writing by the **Commissioner** in accordance with the **Law** and this **Contract**. All such changes, modifications, and amendments will become a part of the **Contract**. **Work** so ordered shall be performed by the **Contractor**.

25.2 **Contract** changes will be made only for **Work** necessary to complete the **Work** included in the original scope of the **Contract** and/or for non-material changes to the scope of the **Contract**. Changes are not permitted for any material alteration in the scope of **Work** in the **Contract**.

25.3 The **Contractor** shall be entitled to a price adjustment for **Extra Work** performed pursuant to a written change order. Adjustments to price shall be computed in one or more of the following ways:

25.3.1 By applicable unit prices specified in the **Contract**; and/or

25.3.2 By agreement of a fixed price; and/or

25.3.3 By time and material records; and/or

25.3.4 In any other manner approved by the **CCPO**.

25.4 All payments for change orders are subject to pre-audit by the **Engineering Audit Officer** and may be post-audited by the **Comptroller** and/or the **Agency**.

ARTICLE 26. METHODS OF PAYMENT FOR OVERRUNS AND EXTRA WORK

26.1 Overrun of Unit Price Item: An overrun is any quantity of a unit price item which the **Contractor** is directed to provide which is in excess of one hundred twenty-five (125%) percent of the estimated quantity for that item set forth in the bid schedule.

26.1.1For any unit price item, the **Contractor** will be paid at the unit price bid for any quantity up to one hundred twenty-five (125%) percent of the estimated quantity for that item set forth in the bid schedule. If during the progress of the **Work**, the actual quantity of any unit price item required to complete the **Work** approaches the estimated quantity for that item, and for any reason it appears that the actual quantity of any unit price item necessary to complete the **Work** will exceed the estimated quantity for that item by twenty-five (25%) percent, the **Contractor** shall immediately notify the **Engineer** of such anticipated overrun. The **Contractor** shall not be compensated for any quantity of a unit price item provided which is in excess of one hundred twenty-five (125%) percent of the estimated quantity for that item set forth in the bid schedule without written authorization from the **Engineer**.

26.1.2If the actual quantity of any unit price item necessary to complete the **Work** will exceed one hundred twenty five (125%) percent of the estimated quantity for that item set forth in the bid schedule, the **City** reserves the right and the **Contractor** agrees to negotiate a new unit price for such item. In no event shall such negotiated new unit price exceed the unit bid price. If the **City** and **Contractor** cannot agree on a new unit price, then the **City** shall order the **Contractor** and the **Contractor** agrees to provide additional quantities of the

item on the basis of time and material records for the actual and reasonable cost as determined under Article 26.2, but in no event at a unit price exceeding the unit price bid.

26.2 **Extra Work:** For **Extra Work** where payment is by agreement on a fixed price in accordance with Article 25.3.2, the price to be paid for such **Extra Work** shall be based on the fair and reasonable estimated cost of the items set forth below. For **Extra Work** where payment is based on time and material records in accordance with Article 25.3.3, the price to be paid for such **Extra Work** shall be the actual and reasonable cost of the items set forth below, calculated in accordance with the formula specified therein, if any.

26.2.1 Necessary materials (including transportation to the **Site**); plus

26.2.2 Necessary direct labor, including payroll taxes (subject to statutory wage caps) and supplemental benefits; plus

26.2.3 Sales and personal property taxes, if any, required to be paid on materials not incorporated into such **Extra Work**; plus

26.2.4 Reasonable rental value of **Contractor**-owned (or **Subcontractor**-owned, as applicable), necessary plant and equipment other than **Small Tools**, plus fuel/energy costs. Except for fuel costs for pick-up trucks which shall be reimbursed based on a consumption of five (5) gallons per shift, fuel costs shall be reimbursed based on actual costs or, in the absence of auditable documentation, the following fuel consumption formula per operating hour: (.035) x (HP rating) x (Fuel cost/gallon). Reasonable rental value is defined as the lower of either seventy-five percent of the monthly prorated rental rates established in "The AED Green Book, Rental Rates and Specifications for Construction Equipment" published by Equipment Watch (the "Green Book"), or seventy-five percent of the monthly prorated rental rates established in the "Rental Rate Blue Book for Construction Equipment" published by Equipment Watch (the "Blue Book") (the applicable Blue Book rate being for rental only without the addition of any operational costs listed in the Blue Book). The reasonable rental value is deemed to be inclusive of all operating costs except for fuel/energy consumption and equipment operator's wages/costs. For multiple shift utilization, reimbursement shall be calculated as follows: first shift shall be seventy-five (75%) percent of such rental rates; second shift shall be sixty (60%) percent of the first shift rate; and third shift shall be forty (40%) percent of the first shift rate. Equipment on standby shall be reimbursed at one-third (1/3) the prorated monthly rental rate. **Contractor**-owned (or **Subcontractor**-owned, as applicable) equipment includes equipment from rental companies affiliated with or controlled by the **Contractor** (or **Subcontractor**, as applicable), as determined by the **Commissioner**. In establishing cost reimbursement for non-operating **Contractor**-owned (or **Subcontractor**-owned, as applicable) equipment (scaffolding, sheeting systems, road plates, etc.), the **City** may restrict reimbursement to a purchase-salvage/life cycle basis if less than the computed rental costs; plus

26.2.5 Necessary installation and dismantling of such plant and equipment, including transportation to and from the **Site**, if any, provided that, in the case of non-**Contractor**-owned (or non-**Subcontractor**-owned, as applicable) equipment rented from a third party, the cost of installation and dismantling are not allowable if such costs are included in the rental rate; plus

26.2.6 Necessary fees charged by governmental entities; plus

26.2.7 Necessary construction-related service fees charged by non-governmental entities, such as landfill tipping fees; plus

26.2.8 Reasonable rental costs of non-**Contractor**-owned (or non-**Subcontractor**-owned, as applicable) necessary plant and equipment other than **Small Tools**, plus fuel/energy costs. Except for fuel costs for pick-up trucks which shall be reimbursed based on a consumption of five (5) gallons per shift, fuel costs shall be reimbursed based on actual costs or, in the absence of auditable documentation, the following fuel consumption formula per hour of operation: (.035) x (HP rating) x (Fuel cost/gallon). In lieu of renting, the **City** reserves the right to direct the purchase of non-operating equipment (scaffolding, sheeting systems, road plates, etc.), with payment on a purchase-salvage/life cycle basis, if less than the projected rental costs; plus

26.2.9 Workers' Compensation Insurance, and any insurance coverage expressly required by the **City** for the performance of the **Extra Work** which is different than the types of insurance required by Article 22 and Schedule A of the General Conditions. The cost of Workers' Compensation Insurance is subject to applicable payroll limitation caps and shall be based upon the carrier's Manual Rate for such insurance derived from the applicable class Loss Cost ("LC") and carrier's Lost Cost Multiplier ("LCM") approved by the New York State Department of Financial Services, and with the exception of experience rating, rate modifiers as promulgated by the New York Compensation Insurance Rating Board ("NYCIRB"); plus

26.2.10 Additional costs incurred as a result of the **Extra Work** for performance and payment bonds; plus

26.2.11 Twelve percent (12%) percent of the total of items in Articles 26.2.1 through 26.2.5 as compensation for overhead, except that no percentage for overhead will be allowed on **Payroll Taxes** or on the premium portion of overtime pay or on sales and personal property taxes. Overhead shall include without limitation, all costs and expenses in connection with administration, management superintendence, small tools, and insurance required by Schedule A of the General Conditions other than Workers' Compensation Insurance; plus

26.2.12 Ten (10%) percent of the total of items in Articles 26.2.1 through 26.2.5, plus the items in Article 26.2.11, as compensation for profit, except that no percentage for profit will be allowed on **Payroll Taxes** or on the premium portion of overtime pay or on sales and personal property taxes; plus

26.2.13 Five (5%) percent of the total of items in Articles 26.2.6 through 26.2.10 as compensation for overhead and profit.

26.3 Where the **Extra Work** is performed in whole or in part by other than the **Contractor's** own forces pursuant to Article 26.2, the **Contractor** shall be paid, subject to pre-audit by the **Engineering Audit Officer**, the cost of such **Work** computed in accordance with Article 26.2 above, plus an additional allowance of five (5%) percent to cover the **Contractor's** overhead and profit.

26.4 Where a change is ordered, involving both **Extra Work** and omitted or reduced **Contract Work,** the **Contract** price shall be adjusted, subject to pre-audit by the **EAO**, in an amount based on the difference between the cost of such **Extra Work** and of the omitted or reduced **Work.**

26.5 Where the **Contractor** and the **Commissioner** can agree upon a fixed price for **Extra Work** in accordance with Article 25.3.2 or another method of payment for **Extra Work** in accordance with Article

25.3.4, or for **Extra Work** ordered in connection with omitted **Work**, such method, subject to pre-audit by the **EAO**, may, at the option of the **Commissioner**, be substituted for the cost plus a percentage method provided in Article 26.2; provided, however, that if the **Extra Work** is performed by a **Subcontractor**, the **Contractor** shall not be entitled to receive more than an additional allowance of five (5%) percent for overhead and profit over the cost of such **Subcontractor's Work** as computed in accordance with Article 26.2.

ARTICLE 27. RESOLUTION OF DISPUTES

27.1 All disputes between the **City** and the **Contractor** of the kind delineated in this Article 27.1 that arise under, or by virtue of, this **Contract** shall be finally resolved in accordance with the provisions of this Article 27 and the **PPB** Rules. This procedure for resolving all disputes of the kind delineated herein shall be the exclusive means of resolving any such disputes.

27.1.1 This Article 27 shall not apply to disputes concerning matters dealt with in other sections of the **PPB** Rules, or to disputes involving patents, copyrights, trademarks, or trade secrets (as interpreted by the courts of New York State) relating to proprietary rights in computer software.

27.1.2 This Article 27 shall apply only to disputes about the scope of **Work** delineated by the **Contract**, the interpretation of **Contract** documents, the amount to be paid for **Extra Work** or disputed work performed in connection with the **Contract**, the conformity of the **Contractor's Work** to the **Contract**, and the acceptability and quality of the **Contractor's Work**; such disputes arise when the **Engineer**, **Resident Engineer**, **Engineering Audit Officer**, or other designee of the **Commissioner** makes a determination with which the **Contractor** disagrees.

27.2 All determinations required by this Article 27 shall be made in writing clearly stated, with a reasoned explanation for the determination based on the information and evidence presented to the party making the determination. Failure to make such determination within the time required by this Article 27 shall be deemed a non-determination without prejudice that will allow application to the next level.

27.3 During such time as any dispute is being presented, heard, and considered pursuant to this Article 27, the **Contract** terms shall remain in force and the **Contractor** shall continue to perform **Work** as directed by the **ACCO** or the **Engineer**. Failure of the **Contractor** to continue **Work** as directed shall constitute a waiver by the **Contractor** of its claim.

27.4 Presentation of Disputes to **Commissioner**.

Notice of Dispute and Agency Response. The **Contractor** shall present its dispute in writing ("Notice of Dispute") to the **Commissioner** within thirty (30) Days of receiving written notice of the determination or action that is the subject of the dispute. This notice requirement shall not be read to replace any other notice requirements contained in the **Contract**. The Notice of Dispute shall include all the facts, evidence, documents, or other basis upon which the **Contractor** relies in support of its position, as well as a detailed computation demonstrating how any amount of money claimed by the **Contractor** in the dispute was arrived at. Within thirty (30) Days after receipt of the detailed written submission comprising the complete Notice of Dispute, the **Engineer**, **Resident Engineer**, **Engineering Audit Officer**, or other designee of the **Commissioner** shall submit to the **Commissioner** all materials he or she deems pertinent to the dispute. Following initial submissions to the **Commissioner**, either party may demand of the other the production of any document or other material the demanding party believes may be relevant to the dispute. The requested party shall produce all relevant materials that are not otherwise

protected by a legal privilege recognized by the courts of New York State. Any question of relevancy shall be determined by the **Commissioner** whose decision shall be final. Willful failure of the **Contractor** to produce any requested material whose relevancy the **Contractor** has not disputed, or whose relevancy has been affirmatively determined, shall constitute a waiver by the **Contractor** of its claim.

27.4.1 **Commissioner** Inquiry. The **Commissioner** shall examine the material and may, in his or her discretion, convene an informal conference with the **Contractor**, the **ACCO**, and the **Engineer**, **Resident Engineer**, **Engineering Audit Officer**, or other designee of the **Commissioner** to resolve the issue by mutual consent prior to reaching a determination. The **Commissioner** may seek such technical or other expertise as he or she shall deem appropriate, including the use of neutral mediators, and require any such additional material from either or both parties as he or she deems fit. The **Commissioner's** ability to render, and the effect of, a decision hereunder shall not be impaired by any negotiations in connection with the dispute presented, whether or not the **Commissioner** participated therein. The **Commissioner** may or, at the request of any party to the dispute, shall compel the participation of any **Other Contractor** with a contract related to the **Work** of this **Contract**, and that **Contractor** shall be bound by the decision of the **Commissioner**. Any **Other Contractor** thus brought into the dispute resolution proceeding shall have the same rights and obligations under this Article 27 as the **Contractor** initiating the dispute.

27.4.2 **Commissioner** Determination. Within thirty (30) **Days** after the receipt of all materials and information, or such longer time as may be agreed to by the parties, the **Commissioner** shall make his or her determination and shall deliver or send a copy of such determination to the **Contractor**, the **ACCO**, and **Engineer**, **Resident Engineer**, **Engineering Audit Officer**, or other designee of the **Commissioner**, as applicable, together with a statement concerning how the decision may be appealed.

27.4.3 Finality of **Commissioner's** Decision. The **Commissioner's** decision shall be final and binding on all parties, unless presented to the Contract Dispute Resolution Board pursuant to this Article 27. The **City** may not take a petition to the Contract Dispute Resolution Board. However, should the **Contractor** take such a petition, the **City** may seek, and the Contract Dispute Resolution Board may render, a determination less favorable to the **Contractor** and more favorable to the **City** than the decision of the **Commissioner**.

27.5 Presentation of Dispute to the **Comptroller**. Before any dispute may be brought by the **Contractor** to the Contract Dispute Resolution Board, the **Contractor** must first present its claim to the **Comptroller** for his or her review, investigation, and possible adjustment.

27.5.1 Time, Form, and Content of Notice. Within thirty (30) **Days** of its receipt of a decision by the **Commissioner,** the **Contractor** shall submit to the **Comptroller** and to the **Commissioner** a Notice of Claim regarding its dispute with the **Agency**. The Notice of Claim shall consist of (i) a brief written statement of the substance of the dispute, the amount of money, if any, claimed and the reason(s) the **Contractor** contends the dispute was wrongly decided by the **Commissioner**; (ii) a copy of the written decision of the **Commissioner**; and (iii) a copy of all materials submitted by the **Contractor** to the **Agency**, including the Notice of Dispute. The **Contractor** may not present to the **Comptroller** any material not presented to the **Commissioner**, except at the request of the **Comptroller**.

27.5.2 Response. Within thirty (30) **Days** of receipt of the Notice of Claim, the **Agency** shall make available to the **Comptroller** a copy of all material submitted by the **Agency** to the **Commissioner** in connection with the dispute. The **Agency** may not present to the

Comptroller any material not presented to the **Commissioner** except at the request of the **Comptroller**.

27.5.3 **Comptroller** Investigation. The **Comptroller** may investigate the claim in dispute and, in the course of such investigation, may exercise all powers provided in Sections 7-201 and 7-203 of the Administrative Code. In addition, the **Comptroller** may demand of either party, and such party shall provide, whatever additional material the **Comptroller** deems pertinent to the claim, including original business records of the **Contractor**. Willful failure of the **Contractor** to produce within fifteen (15) **Days** any material requested by the **Comptroller** shall constitute a waiver by the **Contractor** of its claim. The **Comptroller** may also schedule an informal conference to be attended by the **Contractor**, **Agency** representatives, and any other personnel desired by the **Comptroller**.

27.5.4 Opportunity of **Comptroller** to Compromise or Adjust Claim. The **Comptroller** shall have forty-five (45) **Days** from his or her receipt of all materials referred to in Article 27.5.3 to investigate the disputed claim. The period for investigation and compromise may be further extended by agreement between the **Contractor** and the **Comptroller**, to a maximum of ninety (90) **Days** from the **Comptroller's** receipt of all materials. The **Contractor** may not present its petition to the Contract Dispute Resolution Board until the period for investigation and compromise delineated in this Article 27.5.4 has expired. In compromising or adjusting any claim hereunder, the **Comptroller** may not revise or disregard the terms of the **Contract** between the parties.

27.6 Contract Dispute Resolution Board. There shall be a Contract Dispute Resolution Board composed of:

27.6.1 The chief administrative law judge of the Office of Administrative Trials and Hearings (OATH) or his/her designated OATH administrative law judge, who shall act as chairperson, and may adopt operational procedures and issue such orders consistent with this Article 27 as may be necessary in the execution of the Contract Dispute Resolution Board's functions, including, but not limited to, granting extensions of time to present or respond to submissions;

27.6.2 The **CCPO** or his/her designee; any designee shall have the requisite background to consider and resolve the merits of the dispute and shall not have participated personally and substantially in the particular matter that is the subject of the dispute or report to anyone who so participated; and

27.6.3 A person with appropriate expertise who is not an employee of the **City**. This person shall be selected by the presiding administrative law judge from a prequalified panel of individuals, established and administered by OATH with appropriate background to act as decision-makers in a dispute. Such individual may not have a contract or dispute with the **City** or be an officer or employee of any company or organization that does, or regularly represents persons, companies, or organizations having disputes with the **City**.

27.7 Petition to the Contract Dispute Resolution Board. In the event the claim has not been settled or adjusted by the **Comptroller** within the period provided in this Article 27, the **Contractor**, within thirty (30) **Days** thereafter, may petition the Contract Dispute Resolution Board to review the **Commissioner's** determination.

27.7.1 Form and Content of Petition by **Contractor**. The **Contractor** shall present its dispute to the Contract Dispute Resolution Board in the form of a petition, which shall

include (i) a brief written statement of the substance of the dispute, the amount of money, if any, claimed, and the reason(s) the **Contractor** contends the dispute was wrongly decided by the **Commissioner**; (ii) a copy of the written Decision of the **Commissioner,** (iii) copies of all materials submitted by the **Contractor** to the Agency; (iv) a copy of the written decision of the **Comptroller**, if any, and (v) copies of all correspondence with, or written material submitted by the **Contractor**, to the **Comptroller**. The **Contractor** shall concurrently submit four (4) complete sets of the Petition: one set to the **City** Corporation Counsel (Attn: Commercial and Real Estate Litigation Division) and three (3) sets to the Contract Dispute Resolution Board at OATH's offices with proof of service on the **City** Corporation Counsel. In addition, the **Contractor** shall submit a copy of the written statement of the substance of the dispute, cited in (i) above, to both the **Commissioner** and the **Comptroller**.

27.7.2 **Agency** Response. Within thirty (30) **Days** of its receipt of the Petition by the **City** Corporation Counsel, the **Agency** shall respond to the brief written statement of the **Contractor** and make available to the Contract Dispute Resolution Board all material it submitted to the **Commissioner** and **Comptroller**. Three (3) complete copies of the **Agency** response shall be provided to the Contract Dispute Resolution Board and one to the **Contractor**. Extensions of time for submittal of the **Agency** response shall be given as necessary upon a showing of good cause or, upon consent of the parties, for an initial period of up to thirty (30) Days.

27.7.3 Further Proceedings. The Contract Dispute Resolution Board shall permit the **Contractor** to present its case by submission of memoranda, briefs, and oral argument. The Contract Dispute Resolution Board shall also permit the **Agency** to present its case in response to the **Contractor** by submission of memoranda, briefs, and oral argument. If requested by the **City** Corporation Counsel, the **Comptroller** shall provide reasonable assistance in the preparation of the **Agency's** case. Neither the **Contractor** nor the **Agency** may support its case with any documentation or other material that was not considered by the **Comptroller**, unless requested by the Contract Dispute Resolution Board. The Contract Dispute Resolution Board, in its discretion, may seek such technical or other expert advice as it shall deem appropriate and may seek, on its own or upon application of a party, any such additional material from any party as it deems fit. The Contract Dispute Resolution Board, in its discretion, may combine more than one dispute between the parties for concurrent resolution.

27.7.4 Contract Dispute Resolution Board Determination. Within forty-five (45) **Days** of the conclusion of all written submissions and oral arguments, the Contract Dispute Resolution Board shall render a written decision resolving the dispute. In an unusually complex case, the Contract Dispute Resolution Board may render its decision in a longer period, not to exceed ninety (90) **Days**, and shall so advise the parties at the commencement of this period. The Contract Dispute Resolution Board's decision must be consistent with the terms of the **Contract**. Decisions of the Contract Dispute Resolution Board shall only resolve matters before the Contract Dispute Resolution Board and shall not have precedential effect with respect to matters not before the Contract Dispute Resolution Board.

27.7.5 Notification of Contract Dispute Resolution Board Decision. The Contract Dispute Resolution Board shall send a copy of its decision to the **Contractor**, the **ACCO**, the Engineer, the **Comptroller**, the **City** Corporation Counsel, the CCPO, and the **PPB**. A decision in favor of the **Contractor** shall be subject to the prompt payment provisions of the **PPB** Rules. The Required Payment Date shall be thirty (30) Days after the date the parties are formally notified of the Contract Dispute Resolution Board's decision.

27.7.6 Finality of Contract Dispute Resolution Board Decision. The Contract Dispute Resolution
Board's decision shall be final and binding on all parties. Any party may seek review of the Contract Dispute Resolution Board's decision solely in the form of a challenge, filed within four (4) months of the date of the Contract Dispute Resolution Board's decision, in a court of competent jurisdiction of the State of New York, County of New York pursuant to Article 78 of the Civil Practice Law and Rules. Such review by the court shall be limited to the question of whether or not the Contract Dispute Resolution Board's decision was made in violation of lawful procedure, was affected by an error of **Law**, or was arbitrary and capricious or an abuse of discretion. No evidence or information shall be introduced or relied upon in such proceeding that was not presented to the Contract Dispute Resolution Board in accordance with this Article 27.

27.8 Any termination, cancellation, or alleged breach of the **Contract** prior to or during the pendency of any proceedings pursuant to this Article 27 shall not affect or impair the ability of the **Commissioner** or Contract Dispute Resolution Board to make a binding and final decision pursuant to this Article 27.

ARTICLE 28. RECORD KEEPING FOR EXTRA OR DISPUTED WORK OR WORK ON A TIME & MATERIALS BASIS

28.1 While the **Contractor** or any of its **Subcontractors** is performing **Work** on a time and material basis or **Extra Work** on a time and material basis ordered by the **Commissioner** under Article 25, or where the **Contractor** believes that it or any of its **Subcontractors** is performing **Extra Work** but a final determination by **Agency** has not been made, or the **Contractor** or any of its **Subcontractors** is performing disputed **Work** (whether on or off the **Site**), or complying with a determination or order under protest in accordance with Articles 11, 27, and 30, in each such case the **Contractor** shall furnish the **Resident Engineer** daily with three (3) copies of written statements signed by the **Contractor's** representative at the **Site** showing:

28.1.1 The name, trade, and number of each worker employed on such **Work** or engaged in complying with such determination or order, the number of hours employed, and the character of the **Work** each is doing; and

28.1.2 The nature and quantity of any materials, plant and equipment furnished or used in connection with the performance of such **Work** or compliance with such determination or order, and from whom purchased or rented.

28.2 A copy of such statement will be countersigned by the **Resident Engineer**, noting thereon any items not agreed to or questioned, and will be returned to the **Contractor** within two (2) **Days** after submission.

28.3 The **Contractor** and its **Subcontractors**, when required by the **Commissioner**, or the **Comptroller**, shall also produce for inspection, at the office of the **Contractor** or **Subcontractor**, any and all of its books, bid documents, financial statements, vouchers, records, daily job diaries and reports, and cancelled checks, and any other documents relating to showing the nature and quantity of the labor, materials, plant and equipment actually used in the performance of such **Work**, or in complying with such determination or order, and the amounts expended therefor, and shall permit the **Commissioner** and the **Comptroller** to make such extracts therefrom, or copies thereof, as they or either of them may desire.

28.4 In connection with the examination provided for herein, the **Commissioner**, upon demand therefor, will produce for inspection by the **Contractor** such records as the **Agency** may have with

respect to such **Extra Work** or disputed **Work** performed under protest pursuant to order of the **Commissioner**, except those records and reports which may have been prepared for the purpose of determining the accuracy and validity of the **Contractor's** claim.

28.5 Failure to comply strictly with these requirements shall constitute a waiver of any claim for extra compensation or damages on account of the performance of such **Work** or compliance with such determination or order.

ARTICLE 29. OMITTED WORK

29.1 If any **Contract Work** in a lump sum **Contract**, or if any part of a lump sum item in a unit price, lump sum, or percentage-bid **Contract** is omitted by the **Commissioner** pursuant to Article 33, the **Contract** price, subject to audit by the EAO, shall be reduced by a pro rata portion of the lump sum bid amount based upon the percent of **Work** omitted subject to Article 29.4. For the purpose of determining the pro rata portion of the lump sum bid amount, the bid breakdown submitted in accordance with Article 41 shall be considered, but shall not be the determining factor.

29.2 If the whole of a lump sum item or units of any other item is so omitted by the **Commissioner** in a unit price, lump sum, or percentage-bid **Contract**, then no payment will be made therefor except as provided in Article 29.4.

29.3 For units that have been ordered but are only partially completed, the unit price shall be reduced by a pro rata portion of the unit price bid based upon the percentage of **Work** omitted subject to Article 29.4.

29.4 In the event the **Contractor**, with respect to any omitted **Work**, has purchased any non-cancelable material and/or equipment that is not capable of use except in the performance of this **Contract** and has been specifically fabricated for the sole purpose of this **Contract**, but not yet incorporated into the **Work**, the **Contractor** shall be paid for such material and/or equipment in accordance with Article 64.2.1(b); provided, however, such payment is contingent upon the **Contractor's** delivery of such material and/or equipment in acceptable condition to a location designated by the **City**.

29.5 The **Contractor** agrees to make no claim for damages or for loss of overhead and profit with regard to any omitted **Work**.

ARTICLE 30. NOTICE AND DOCUMENTATION OF COSTS AND DAMAGES; PRODUCTION OF FINANCIAL RECORDS

30.1 If the **Contractor** shall claim to be sustaining damages by reason of any act or omission of the **City** or its agents, it shall submit to the **Commissioner** within forty-five (45) **Days** from the time such damages are first incurred, and every thirty (30) **Days** thereafter for as long as such damages are incurred, verified statements of the details and the amounts of such damages, together with documentary evidence of such damages. The **Contractor** may submit any of the above statements within such additional time as may be granted by the **Commissioner** in writing upon written request therefor. Failure of the **Commissioner** to respond in writing to a written request for additional time within thirty (30) **Days** shall be deemed a denial of the request. On failure of the **Contractor** to strictly comply with the foregoing provisions, such claims shall be deemed waived and no right to recover on such claims shall exist. Damages that the **Contractor** may claim in any action or dispute resolution procedure arising under or by reason of this **Contract** shall not be different from or in excess of the statements and documentation made pursuant to this Article 30.

30.2 In addition to the foregoing statements, the **Contractor** shall, upon notice from the **Commissioner**, produce for examination at the **Contractor's** office, by the **Engineer, Architect** or **Project Manager**, all of its books of account, bills, invoices, payrolls, subcontracts, time books, daily reports, bank deposit books, bank statements, check books, and cancelled checks, showing all of its acts and transactions in connection with or relating to or arising by reason of this **Contract**, and submit itself and persons in its employment, for examination under oath by any person designated by the **Commissioner** or **Comptroller** to investigate claims made or disputes against the **City** under this **Contract**. At such examination, a duly authorized representative of the **Contractor** may be present.

30.3 In addition to the statements required under Article 28 and this Article 30, the **Contractor** and/or its **Subcontractor** shall, within thirty (30) **Days** upon notice from the **Commissioner** or **Comptroller**, produce for examination at the **Contractor's** and/or **Subcontractor's** office, by a representative of either the **Commissioner** or **Comptroller**, all of its books of account, bid documents, financial statements, accountant workpapers, bills, invoices, payrolls, subcontracts, time books, daily reports, bank deposit books, bank statements, check books, and cancelled checks, showing all of its acts and transactions in connection with or relating to or arising by reason of this **Contract**. Further, the **Contractor** and/or its **Subcontractor** shall submit any person in its employment, for examination under oath by any person designated by the **Commissioner** or **Comptroller** to investigate claims made or disputes against the **City** under this **Contract**. At such examination, a duly authorized representative of the **Contractor** may be present.

30.4 Unless the information and examination required under Article 30.3 is provided by the **Contractor** and/or its **Subcontractor** upon thirty (30) **Days'** notice from the **Commissioner** or **Comptroller**, or upon the **Commissioner's** or **Comptroller's** written authorization to extend the time to comply, the **City** shall be released from all claims arising under, relating to or by reason of this **Contract**, except for sums certified by the **Commissioner** to be due under the provisions of this **Contract**. It is further stipulated and agreed that no person has the power to waive any of the foregoing provisions and that in any action or dispute resolution procedure against the **City** to recover any sum in excess of the sums certified by the **Commissioner** to be due under or by reason of this **Contract**, the **Contractor** must allege in its complaint and prove, at trial or during such dispute resolution procedure, compliance with the provisions of this Article 30.

30.5 In addition, after the commencement of any action or dispute resolution procedure by the **Contractor** arising under or by reason of this **Contract**, the **City** shall have the right to require the **Contractor** to produce for examination under oath, up until the trial of the action or hearing before the Contract Dispute Resolution Board, the books and documents described in Article 30.3 and submit itself and all persons in its employ for examination under oath. If this Article 30 is not complied with as required, then the **Contractor** hereby consents to the dismissal of the action or dispute resolution procedure.

CHAPTER VII
POWERS OF THE RESIDENT ENGINEER, THE ENGINEER OR ARCHITECT AND THE COMMISSIONER

ARTICLE 31. THE RESIDENT ENGINEER

31.1 The **Resident Engineer** shall have the power to inspect, supervise, and control the performance of the **Work**, subject to review by the **Commissioner**. The **Resident Engineer** shall not, however, have the power to issue an **Extra Work** order, except as specifically designated in writing by the **Commissioner**.

ARTICLE 32. THE ENGINEER OR ARCHITECT OR PROJECT MANAGER

32.1 The **Engineer** or **Architect** or **Project Manager**, in addition to those matters elsewhere herein delegated to the **Engineer** and expressly made subject to his/her determination, direction or approval, shall have the power, subject to review by the **Commissioner**:

32.1.1 To determine the amount, quality, and location of the **Work** to be paid for hereunder; and

32.1.2 To determine all questions in relation to the **Work**, to interpret the **Contract Drawings**, **Specifications**, and **Addenda**, and to resolve all patent inconsistencies or ambiguities therein; and

32.1.3 To determine how the **Work** of this **Contract** shall be coordinated with **Work** of **Other Contractors** engaged simultaneously on this **Project**, including the power to suspend any part of the **Work**, but not the whole thereof; and

32.1.4 To make minor changes in the **Work** as he/she deems necessary, provided such changes do not result in a net change in the cost to the **City** or to the **Contractor** of the **Work** to be done under the **Contract**; and

32.1.5 To amplify the **Contract Drawings**, add explanatory information and furnish additional **Specifications** and drawings, consistent with this **Contract**.

32.2 The foregoing enumeration shall not imply any limitation upon the power of the **Engineer** or **Architect** or **Project Manager**, for it is the intent of this **Contract** that all of the **Work** shall generally be subject to his/her determination, direction, and approval, except where the determination, direction or approval of someone other than the **Engineer** or **Architect** or **Project Manager** is expressly called for herein.

32.3 The **Engineer** or **Architect** or **Project Manager** shall not, however, have the power to issue an **Extra Work** order, except as specifically designated in writing by the **Commissioner**.

ARTICLE 33. THE COMMISSIONER

33.1 The **Commissioner**, in addition to those matters elsewhere herein expressly made subject to his/her determination, direction or approval, shall have the power:

33.1.1 To review and make determinations on any and all questions in relation to this **Contract**
and its performance; and

33.1.2 To modify or change this **Contract** so as to require the performance of **Extra Work** (subject, however, to the limitations specified in Article 25) or the omission of **Contract Work**; and

33.1.3 To suspend the whole or any part of the **Work** whenever in his/her judgment such suspension is required:

33.1.3(a) In the interest of the **City** generally; or

33.1.3(b) To coordinate the **Work** of the various contractors engaged on this **Project** pursuant to the provisions of Article 12; or

33.1.3(c) To expedite the completion of the entire **Project** even though the completion of this particular **Contract** may thereby be delayed.

ARTICLE 34. NO ESTOPPEL

34.1 Neither the **City** nor any **Agency**, official, agent or employee thereof, shall be bound, precluded or estopped by any determination, decision, approval, order, letter, payment or certificate made or given under or in connection with this **Contract** by the **City**, the **Commissioner**, the **Engineer**, the **Resident Engineer**, or any other official, agent or employee of the **City**, either before or after the final completion and acceptance of the **Work** and payment therefor:

34.1.1 From showing the true and correct classification, amount, quality or character of the **Work** actually done; or that any such determination, decision, order, letter, payment or certificate was untrue, incorrect or improperly made in any particular, or that the **Work**, or any part thereof, does not in fact conform to the requirements of this **Contract**; and

34.1.2 From demanding and recovering from the **Contractor** any overpayment made to it, or such damages as the **City** may sustain by reason of the **Contractor's** failure to perform each and every part of its **Contract**.

CHAPTER VIII
LABOR PROVISIONS

ARTICLE 35. EMPLOYEES

35.1 The **Contractor** and its **Subcontractors** shall not employ on the **Work**:

35.1.1 Anyone who is not competent, faithful and skilled in the **Work** for which he/she shall be employed; and whenever the **Commissioner** shall inform the **Contractor**, in writing, that any employee is, in his/her opinion, incompetent, unfaithful or disobedient, that employee shall be discharged from the **Work** forthwith, and shall not again be employed upon it; or

35.1.2 Any labor, materials or means whose employment, or utilization during the course of this **Contract**, may tend to or in any way cause or result in strikes, work stoppages, delays, suspension of **Work** or similar troubles by workers employed by the **Contractor** or its **Subcontractors**, or by any of the trades working in or about the buildings and premises where **Work** is being performed under this **Contract**, or by **Other Contractors** or their **Subcontractors** pursuant to other contracts, or on any other building or premises owned or operated by the **City**, its **Agencies**, departments, boards or authorities. Any violation by the **Contractor** of this requirement may, upon certification of the **Commissioner**, be considered as proper and sufficient cause for declaring the **Contractor** to be in default, and for the **City** to take action against it as set forth in Chapter X of this **Contract**, or such other article of this **Contract** as the **Commissioner** may deem proper; or

35.1.3 In accordance with Section 220.3-e of the Labor Law of the State of New York (hereinafter "Labor Law"), the **Contractor** and its **Subcontractors** shall not employ on the **Work** any apprentice, unless he/she is a registered individual, under a bona fide program

registered with the New York State Department of Labor. The allowable ratio of apprentices to journey-level workers in any craft classification shall not be greater than the ratio permitted to the **Contractor** as to its work force on any job under the registered program. Any employee listed on a payroll at an apprentice wage rate, who is not registered as above, shall be paid the wage rate determined by the **Comptroller** of the **City** for the classification of **Work** actually performed. The **Contractor** or **Subcontractor** will be required to furnish written evidence of the registration of its program and apprentices as well as all the appropriate ratios and wage rates, for the area of the construction prior to using any apprentices on the **Contract Work.**

35.2 If the total cost of the **Work** under this **Contract** is at least two hundred fifty thousand ($250,000) dollars, all laborers, workers, and mechanics employed in the performance of the **Contract** on the public work site, either by the **Contractor, Subcontractor** or other person doing or contracting to do the whole or a part of the **Work** contemplated by the **Contract**, shall be certified prior to performing any **Work** as having successfully completed a course in construction safety and health approved by the United States Department of Labor's Occupational Safety and Health Administration that is at least ten (10) hours in duration.

35.3 In accordance with Local Law Nos. 30-2012 and 33-2012, codified at sections 6-132 and 12-113 of the Administrative Code, respectively,

35.3.1 The **Contractor** shall not take an adverse personnel action with respect to an officer or employee in retaliation for such officer or employee making a report of information concerning conduct which such officer or employee knows or reasonably believes to involve corruption, criminal activity, conflict of interest, gross mismanagement or abuse of authority by any officer or employee relating to this **Contract** to (a) the Commissioner of the Department of Investigation, (b) a member of the New York City Council, the Public Advocate, or the **Comptroller**, or (c) the **CCPO, ACCO, Agency** head, or **Commissioner.**

35.3.2 If any of the **Contractor**'s officers or employees believes that he or she has been the subject of an adverse personnel action in violation of Article 35.3.1, he or she shall be entitled to bring a cause of action against the **Contractor** to recover all relief necessary to make him or her whole. Such relief may include but is not limited to: (a) an injunction to restrain continued retaliation, (b) reinstatement to the position such employee would have had but for the retaliation or to an equivalent position, (c) reinstatement of full fringe benefits and seniority rights, (d) payment of two times back pay, plus interest, and (e) compensation for any special damages sustained as a result of the retaliation, including litigation costs and reasonable attorney's fees.

35.3.3 The **Contractor** shall post a notice provided by the **City** in a prominent and accessible place on any site where work pursuant to the **Contract** is performed that contains information about:

35.3.3(a) how its employees can report to the New York City Department of Investigation allegations of fraud, false claims, criminality or corruption arising out of or in connection with the **Contract**; and

35.3.3(b) the rights and remedies afforded to its employees under Administrative Code sections 7-805 (the New York City False Claims Act) and 12-113 (the Whistleblower Protection Expansion Act) for lawful acts taken in connection with the reporting of allegations of fraud, false claims, criminality or corruption in connection with the **Contract.**

35.3.4 For the purposes of this Article 35.3, "adverse personnel action" includes dismissal, demotion, suspension, disciplinary action, negative performance evaluation, any action resulting in loss of staff, office space, equipment or other benefit, failure to appoint, failure to promote, or any transfer or assignment or failure to transfer or assign against the wishes of the affected officer or employee.

35.3.5 This Article 35.3 is applicable to all of the **Contractor**'s **Subcontractors** having subcontracts with a value in excess of $100,000; accordingly, the **Contractor** shall include this rider in all subcontracts with a value a value in excess of $100,000.

35.4 Article 35.3 is not applicable to this **Contract** if it is valued at $100,000 or less. Articles 35.3.1, 35.3.2, 35.3.4, and 35.3.5 are not applicable to this **Contract** if it was solicited pursuant to a finding of an emergency.

ARTICLE 36. NO DISCRIMINATION

36.1 The **Contractor** specifically agrees, as required by Labor Law Section 220-e, as amended, that:

36.1.1 In the hiring of employees for the performance of **Work** under this **Contract** or any subcontract hereunder, neither the **Contractor**, **Subcontractor**, nor any person acting on behalf of such **Contractor** or **Subcontractor**, shall by reason of race, creed, color or national origin discriminate against any citizen of the State of New York who is qualified and available to perform the **Work** to which the employment relates;

36.1.2 Neither the **Contractor**, **Subcontractor**, nor any person on its behalf shall, in any manner, discriminate against or intimidate any employee hired for the performance of **Work** under this **Contract** on account of race, creed, color or national origin;

36.1.3 There may be deducted from the amount payable to the **Contractor** by the **City** under this **Contract** a penalty of fifty ($50.00) dollars for each person for each **Day** during which such person was discriminated against or intimidated in violation of the provisions of this **Contract**; and

36.1.4 This **Contract** may be cancelled or terminated by the **City** and all moneys due or to become due hereunder may be forfeited, for a second or any subsequent violation of the terms or conditions of this Article 36.

36.1.5 This Article 36 covers all construction, alteration and repair of any public building or public work occurring in the State of New York and the manufacture, sale, and distribution of materials, equipment, and supplies to the extent that such operations are performed within the State of New York pursuant to this **Contract**.

36.2 The **Contractor** specifically agrees, as required by Section 6-108 of the Administrative Code, as amended, that:

36.2.1 It shall be unlawful for any person engaged in the construction, alteration or repair of buildings or engaged in the construction or repair of streets or highways pursuant to a **Contract** with the **City** or engaged in the manufacture, sale or distribution of materials, equipment or supplies pursuant to a **Contract** with the **City** to refuse to employ or to refuse to continue in any employment any person on account of the race, color or creed of such person.

36.2.2 It shall be unlawful for any person or any servant, agent or employee of any person, described in Article 36.1.2, to ask, indicate or transmit, orally or in writing, directly or indirectly, the race, color or creed or religious affiliation of any person employed or seeking employment from such person, firm or corporation.

36.2.3 Breach of the foregoing provisions shall be deemed a violation of a material provision of this **Contract**.

36.2.4 Any person, or the employee, manager or owner of or officer of such firm or corporation who shall violate any of the provisions of this Article 36.2 shall, upon conviction thereof, be punished by a fine of not more than one hundred ($100.00) dollars or by imprisonment for not more than thirty (30) **Days**, or both.

36.3 This **Contract** is subject to the requirements of Executive Order No. 50 (1980) ("E.O. 50"), as revised, and the rules and regulations promulgated thereunder. No contract will be awarded unless and until these requirements have been complied with in their entirety. By signing this **Contract**, the **Contractor** agrees that it:

36.3.1 Will not engage in any unlawful discrimination against any employee or applicant for employment because of race, creed, color, national origin, sex, age, disability, marital status or sexual orientation with respect to all employment decisions including, but not limited to, recruitment, hiring, upgrading, demotion, downgrading, transfer, training, rates of pay or other forms of compensation, layoff, termination, and all other terms and conditions of employment; and

36.3.2 Will not engage in any unlawful discrimination in the selection of **Subcontractors** on the basis of the owner's race, color, creed, national origin, sex, age, disability, marital status or sexual orientation; and

36.3.3 Will state in all solicitations or advertisements for employees placed by or on behalf of the **Contractor** that all qualified applicants will receive consideration for employment without unlawful discrimination based on race, creed, color, national origin, sex, age, citizens status, disability, marital status, sexual orientation, or that it is an equal employment opportunity employer; and

36.3.4 Will send to each labor organization or representative of workers with which it has a collective bargaining agreement or other contract or memorandum of understanding, written notification of its equal employment opportunity commitments under E.O. 50 and the rules and regulations promulgated thereunder; and

36.3.5 Will furnish, before the award of the **Contract**, all information and reports, including an employment report, that are required by E.O. 50, the rules and regulations promulgated thereunder, and orders of the **City** Department of Business Services, Division of Labor Services (**DLS**) and will permit access to its books, records, and accounts by the **DLS** for the purposes of investigation to ascertain compliance with such rules, regulations, and orders.

36.4 The **Contractor** understands that in the event of its noncompliance with the nondiscrimination clauses of this **Contract** or with any of such rules, regulations, or orders, such noncompliance shall constitute a material breach of this **Contract** and noncompliance with E.O. 50 and the rules and regulations promulgated thereunder. After a hearing held pursuant to the rules of the **DLS**, the Director of the **DLS** may direct the **Commissioner** to impose any or all of the following sanctions:

36.4.1 Disapproval of the **Contractor**; and/or

36.4.2 Suspension or termination of the **Contract**; and/or

36.4.3 Declaring the **Contractor** in default; and/or

36.4.4 In lieu of any of the foregoing sanctions, the Director of the **DLS** may impose an employment program.

In addition to any actions taken under this **Contract**, failure to comply with E.O. 50 and the rules and regulations promulgated thereunder, in one or more instances, may result in a **City Agency** declaring the **Contractor** to be non-responsible in future procurements. The **Contractor** further agrees that it will refrain from entering into any **Contract** or **Contract** modification subject to E.O. 50 and the rules and regulations promulgated thereunder with a **Subcontractor** who is not in compliance with the requirements of E.O. 50 and the rules and regulations promulgated thereunder.

36.5 The **Contractor** specifically agrees, as required by Section 6-123 of the Administrative Code, that:

36.5.1 The **Contractor** will not engage in any unlawful discriminatory practice in violation of Title 8 of the Administrative Code; and

36.5.2 Any failure to comply with this Article 36.5 may subject the **Contractor** to the remedies set forth in Section 6-123 of the Administrative Code, including, where appropriate, sanctions such as withholding of payment, imposition of an employment program, finding the **Contractor** to be in default, cancellation of the **Contract**, or any other sanction or remedy provided by **Law** or **Contract**.

ARTICLE 37. LABOR LAW REQUIREMENTS

37.1 The **Contractor** shall strictly comply with all applicable provisions of the Labor Law, as amended. Such compliance is a material term of this **Contract**.

37.2 The **Contractor** specifically agrees, as required by Labor Law Sections 220 and 220-d, as amended, that:

37.2.1 Hours of **Work**: No laborer, worker, or mechanic in the employ of the **Contractor**, **Subcontractor** or other person doing or contracting to do the whole or a part of the **Work** contemplated by this **Contract** shall be permitted or required to work more than eight (8) hours in any one (1) **Day**, or more than five (5) **Days** in any one (1) week, except as provided in the Labor Law and in cases of extraordinary emergency including fire, flood, or danger to life or property, or in the case of national emergency when so proclaimed by the President of the United States of America.

37.2.2 In situations in which there are not sufficient laborers, workers, and mechanics who may be employed to carry on expeditiously the **Work** contemplated by this **Contract** as a result of such restrictions upon the number of hours and **Days** of labor, and the immediate commencement or prosecution or completion without undue delay of the **Work** is necessary for the preservation of the **Site** and/or for the protection of the life and limb of the persons using the same, such laborers, workers, and mechanics shall be permitted or required to

work more than eight (8) hours in any one (1) **Day**; or five (5) **Days** in any one (1) week; provided, however, that upon application of any **Contractor**, the **Commissioner** shall have first certified to the Commissioner of Labor of the State of New York (hereinafter "Commissioner of Labor") that such public **Work** is of an important nature and that a delay in carrying it to completion would result in serious disadvantage to the public; and provided, further, that such Commissioner of Labor shall have determined that such an emergency does in fact exist as provided in Labor Law Section 220.2.

37.2.3 Failure of the **Commissioner** to make such a certification to the Commissioner of Labor shall not entitle the **Contractor** to damages for delay or for any cause whatsoever.

37.2.4 Prevailing Rate of Wages: The wages to be paid for a legal day's **Work** to laborers, workers, or mechanics employed upon the **Work** contemplated by this **Contract** or upon any materials to be used thereon shall not be less than the "prevailing rate of wage" as defined in Labor Law Section 220, and as fixed by the **Comptroller** in the attached Schedule of Wage Rates and in updated schedules thereof. The prevailing wage rates and supplemental benefits to be paid are those in effect at the time the **Work** is being performed.

37.2.5 Requests for interpretation or correction in the Information for Bidders includes all requests for clarification of the classification of trades to be employed in the performance of the **Work** under this **Contract.** In the event that a trade not listed in the **Contract** is in fact employed during the performance of this **Contract**, the **Contractor** shall be required to obtain from the **Agency** the prevailing wage rates and supplementary benefits for the trades used and to complete the performance of this **Contract** at the price at which the **Contract** was awarded.

37.2.6 Minimum Wages: Except for employees whose wage is required to be fixed pursuant to Labor Law Section 220, all persons employed by the **Contractor** and any **Subcontractor** in the manufacture or furnishing of the supplies, materials, or equipment, or the furnishing of work, labor, or services, used in the performance of this **Contract**, shall be paid, without subsequent deduction or rebate unless expressly authorized by **Law**, not less than the sum mandated by **Law**.

37.3 Working Conditions: No part of the **Work**, labor or services shall be performed or rendered by the **Contractor** in any plants, factories, buildings or surroundings or under working conditions which are unsanitary or hazardous or dangerous to the health and safety of employees engaged in the performance of this **Contract**. Compliance with the safety, sanitary, and factory inspection **Laws** of the state in which the **Work** is to be performed shall be prima facie evidence of compliance with this Article 37.3.

37.4 Prevailing Wage Enforcement: The **Contractor** agrees to pay for all costs incurred by the **City** in enforcing prevailing wage requirements, including the cost of any investigation conducted by or on behalf of the **Agency** or the **Comptroller,** where the **City** discovers a failure to comply with any of the requirements of this Article 37 by the **Contractor** or its **Subcontractor(s)**. The **Contractor** also agrees that, should it fail or refuse to pay for any such investigation, the **Agency** is hereby authorized to deduct from a **Contractor's** account an amount equal to the cost of such investigation.

37.4.1 The Labor Law Section 220 and Section 220-d, as amended, provide that this **Contract** shall be forfeited and no sum paid for any **Work** done hereunder on a second conviction for willfully paying less than:

37.4.1(a) The stipulated prevailing wage scale as provided in Labor Law section 220, as amended, or

37.4.1(b) The stipulated minimum hourly wage scale as provided in Labor Law section 220-d, as amended.

37.4.2 For any breach or violation of either working conditions (Article 37.3) or minimum wages (Article 37.2.6) provisions, the party responsible therefor shall be liable to the **City** for liquidated damages, which may be withheld from any amounts due on any contracts with the **City** of such party responsible, or may be recovered in actions brought by the **City** Corporation Counsel in the name of the **City**, in addition to damages for any other breach of this **Contract**, for a sum equal to the amount of any underpayment of wages due to any employee engaged in the performance of this **Contract**. In addition, the **Commissioner** shall have the right to cancel contracts and enter into other contracts for the completion of the original contract, with or without public letting, and the original **Contractor** shall be liable for any additional cost. All sums withheld or recovered as deductions, rebates, refunds, or underpayment of wages hereunder, shall be held in a special deposit account and shall be paid without interest, on order of the **Comptroller**, directly to the employees who have been paid less than minimum rates of pay as set forth herein and on whose account such sums were withheld or recovered, provided that no claims by employees for such payments shall be entertained unless made within two (2) years from the date of actual notice to the **Contractor** of the withholding or recovery of such sums by the **City**.

37.4.3 A determination by the **Comptroller** that a **Contractor** and/or its **Subcontractor** willfully violated Labor Law Section 220 will be forwarded to the **City's** five District Attorneys for review.

37.4.4 The **Contractor's** or **Subcontractor's** noncompliance with this Article 37.4 and Labor Law Section 220 may result in an unsatisfactory performance evaluation and the **Comptroller** may also find and determine that the **Contractor** or **Subcontractor** willfully violated the New York Labor **Law**.

37.4.4(a) An unsatisfactory performance evaluation for noncompliance with this Article 37.4 may result in a determination that the **Contractor** is a non-responsible bidder on subsequent procurements with the **City** and thus a rejection of a future award of a contract with the **City**, as well as any other sanctions provided for by **Law**.

37.4.4(b) Labor Law Section 220-b, as amended, provides that when two (2) final determinations have been rendered against a **Contractor** or **Subcontractor** within any consecutive six (6) year period determining that such **Contractor** or **Subcontractor** has willfully failed to pay the prevailing rate of wages or to provide supplements in accordance with the Labor Law and this Article 37.4, whether such failures were concurrent or consecutive and whether or not such final determinations concerning separate public works projects are rendered simultaneously, such **Contractor** or **Subcontractor** shall be ineligible to submit a bid on or be awarded any public works contract with the **City** for a period of five (5) years from the second final determination. If the final determination involves the falsification of payroll records or the kickback of wages or supplements, the **Contractor** or **Subcontractor** shall be ineligible to submit a bid on or be awarded any public works contract with the **City** for a period of five (5) years from the first final determination.

37.4.4(c) Labor Law Section 220, as amended, provides that the **Contractor** or **Subcontractor** found to have violated this Article 37.4 may be directed to make payment of wages or supplements including interest found to be due, and the **Contractor** or **Subcontractor** may be directed to make payment of a further sum as

a civil penalty in an amount not exceeding twenty-five (25%) percent of the total amount found to be due.

37.5 The **Contractor** and its **Subcontractors** shall within ten (10) **Days** after mailing of a Notice of Award or written order, post in prominent and conspicuous places in each and every plant, factory, building, and structure where employees of the **Contractor** and its **Subcontractors** engaged in the performance of this **Contract** are employed, notices furnished by the **City**, in relation to prevailing wages and supplements, minimum wages, and other stipulations contained in Sections 220 and 220-h of the Labor Law, and the **Contractor** and its **Subcontractors** shall continue to keep such notices posted in such prominent and conspicuous places until **Final Acceptance** of the supplies, materials, equipment, or **Work**, labor, or services required to be furnished or rendered under this **Contract**.

37.6 The **Contractor** shall strictly comply with all of the provisions of Articles 37.6.1 through 37.6.5, and provide for all workers, laborers or mechanics in its employ, the following:

37.6.1 Notices Posted At **Site**: Post, in a location designated by the **City**, schedules of prevailing wages and supplements for this **Project**, a copy of all re-determinations of such schedules for the **Project**, the Workers' Compensation **Law** Section 51 notice, all other notices required by **Law** to be posted at the **Site**, the **City** notice that this **Project** is a public works project on which each worker is entitled to receive the prevailing wages and supplements for the occupation at which he or she is working, and all other notices which the **City** directs the **Contractor** to post. The **Contractor** shall provide a surface for such notices which is satisfactory to the **City**. The **Contractor** shall maintain and keep current such notices in a legible manner and shall replace any notice or schedule which is damaged, defaced, illegible or removed for any reason. The **Contractor** shall post such notices before commencing any **Work** on the **Site** and shall maintain such notices until all **Work** on the **Site** is complete; and

37.6.2 Daily **Site** Sign-in Sheets: Maintain daily **Site** sign-in sheets, and require that **Subcontractors** maintain daily **Site** sign-in sheets for its employees, which include blank spaces for an employee's name to be both printed and signed, job title, date started and Social Security number, the time the employee began work and the time the employee left work, until **Final Acceptance** of the supplies, materials, equipment, or **Work**, labor, or services to be furnished or rendered under this **Contract** unless exception is granted by the **Comptroller** upon application by the **Agency**. In the alternative, subject to the approval of the **CCPO**, the **Contractor** and **Subcontractor** may maintain an electronic or biometric sign-in system, which provides the information required by this Article 37.6.2; and

37.6.3 Individual Employee Information Notices: Distribute a notice to each worker, laborer or mechanic employed under this **Contract**, in a form provided by the **Agency**, that this **Project** is a public works project on which each worker, laborer or mechanic is entitled to receive the prevailing rate of wages and supplements for the occupation at which he or she is working. If the total cost of the **Work** under this **Contract** is at least two hundred fifty thousand ($250,000) dollars, such notice shall also include a statement that each worker, laborer or mechanic must be certified prior to performing any **Work** as having successfully completed a course in construction safety and health approved by the United States Department of Labor's Occupational Safety and Health Administration that is at least ten (10) hours in duration. Such notice shall be distributed to each worker before he or she starts performing any **Work** of this **Contract** and with the first paycheck after July first of each year. "Worker, laborer or mechanic" includes employees of the **Contractor** and all **Subcontractors** and all employees of suppliers entering the **Site**. At the time of distribution, the **Contractor** shall have each worker, laborer or mechanic sign a statement, in a form provided by the **Agency**, certifying that the worker has received the notice required by this

Article 37.6.3, which signed statement shall be maintained with the payroll records required by this **Contract**; and

37.6.3(a) The **Contractor** and each **Subcontractor** shall notify each worker, laborer or mechanic employed under this **Contract** in writing of the prevailing rate of wages for their particular job classification. Such notification shall be given to every worker, laborer, and mechanic on their first pay stub and with every pay stub thereafter; and

37.6.4 **Site** Laminated Identification Badges: The **Contractor** shall provide laminated identification badges which include a photograph of the worker's, laborer's or mechanic's face and indicate the worker's, laborer's or mechanic's name, trade, employer's name, and employment starting date (month/day/year). Further, the **Contractor** shall require as a condition of employment on the **Site**, that each and every worker, laborer or mechanic wear the laminated identification badge at all times and that it may be seen by any representative of the **City**. The **Commissioner** may grant a written waiver from the requirement that the laminated identification badge include a photograph if the **Contractor** demonstrates that the identity of an individual wearing a laminated identification badge can be easily verified by another method; and

37.6.5 Language Other Than English Used On **Site**: Provide the **ACCO** notice when three (3) or more employees (worker and/or laborer and/or mechanic) on the **Site**, at any time, speak a language other than English. The **ACCO** will then provide the **Contractor** the notices described in Article 37.6.1 in that language or languages as may be required. The **Contractor** is responsible for all distributions under this Article 37; and

37.6.6 Provision of Records: The **Contractor** and **Subcontractor(s)** shall produce within five (5) **Days** on the **Site** of the **Work** and upon a written order of the **Engineer**, the **Commissioner**, the **ACCO**, the **Agency EAO**, or the **Comptroller,** such records as are required to be kept by this Article 37.6; and

37.6.7 The **Contractor** and **Subcontractor(s)** shall pay employees by check or direct deposit. If this **Contract** is for an amount greater than one million ($1,000,000) dollars, checks issued by the **Contractor** to covered employees shall be generated by a payroll service or automated payroll system (an in-house system may be used if approved by the **Agency**). For any subcontract for an amount greater than seven hundred fifty thousand ($750,000) dollars, checks issued by a **Subcontractor** to covered employees shall be generated by a payroll service or automated payroll system (an in-house system may be used if approved by the **Agency**); and

37.6.8 The failure of the **Contractor** or **Subcontractor(s)** to comply with the provisions of Articles 37.6.1 through 37.6.7 may result in the **Commissioner** declaring the **Contractor** in default and/or the withholding of payments otherwise due under the **Contract**.

37.7 The **Contractor** and its **Subcontractors** shall keep such employment and payroll records as are required by Section 220 of the Labor Law. The failure of the **Contractor** or **Subcontractor(s)** to comply with the provisions of this Article 37.7 may result in the **Commissioner** declaring the **Contractor** in default and/or the withholding of payments otherwise due under the **Contract.**

37.8 At the time the **Contractor** makes application for each partial payment and for final payment, the **Contractor** shall submit to the **Commissioner** a written payroll certification, in the form provided by this **Contract**, of compliance with the prevailing wage, minimum wage, and other provisions and stipulations required by Labor Law Section 220 and of compliance with the training requirements of

Labor Law Section 220-h set forth in Article 35.2. This certification of compliance shall be a condition precedent to payment and no payment shall be made to the **Contractor** unless and until each such certification shall have been submitted to and received by the **Commissioner**.

37.9 This **Contract** is executed by the **Contractor** with the express warranty and representation that the **Contractor** is not disqualified under the provisions of Section 220 of the Labor Law from the award of the **Contract**.

37.10 Any breach or violation of any of the foregoing shall be deemed a breach or violation of a material provision of this **Contract**, and grounds for cancellation thereof by the **City**.

ARTICLE 38. PAYROLL REPORTS

38.1 The **Contractor** and its **Subcontractor(s)** shall maintain on the **Site** during the performance of the **Work** the original payrolls or transcripts thereof which the **Contractor** and its **Subcontractor(s)** are required to maintain and shall submit such original payrolls or transcripts, subscribed and affirmed by it as true, within thirty (30) **Days** after issuance of its first payroll, and every thirty (30) **Days** thereafter, pursuant to Labor Law Section 220(3-a)(a)(iii). The **Contractor** and **Subcontractor(s)** shall submit such original payrolls or transcripts along with each and every payment requisition. If payment requisitions are not submitted at least once a month, the **Contractor** and its **Subcontractor(s)** shall submit original payrolls and transcripts both along with its payment requisitions and independently of its payment requisitions.

38.2 The **Contractor** shall maintain payrolls or transcripts thereof for six (6) years from the date of completion of the **Work** on this **Contract**. If such payrolls and transcripts are maintained outside of New York City after the completion of the **Work** and their production is required pursuant to this Article 38, the **Contractor** shall produce such records in New York City upon request by the City.

38.3 The **Contractor** and **Subcontractor(s)** shall comply with any written order, direction, or request made by the **Engineer**, the **Commissioner**, the **ACCO**, the **Agency EAO**, the **Agency Labor Law Investigator(s)**, or the **Comptroller**, to provide to the requesting party any of the following information and/or records within five (5) **Days** of such written order, direction, or request:

38.3.1 Such original payrolls or transcripts thereof subscribed and affirmed by it as true and the statements signed by each worker pursuant to this Chapter VIII; and/or

38.3.2 Attendance sheets for each **Day** on which any employee of the **Contractor** and/or any of the **Subcontractor(s)** performed **Work** on the **Site**, which attendance sheet shall be in a form acceptable to the **Agency** and shall provide information acceptable to the **Agency** to identify each such employee; and/or

38.3.3 Any other information to satisfy the **Engineer**, the **Commissioner**, the **ACCO**, the **Agency EAO**, the **Agency Labor Law Investigator(s)** or the **Comptroller**, that this Chapter VIII and the Labor Law, as to the hours of employment and prevailing rates of wages and/or supplemental benefits, are being observed.

38.4 The failure of the **Contractor** or **Subcontractor(s)** to comply with the provisions of Articles 38.1 and/or 38.2 may result in the **Commissioner** declaring the **Contractor** in default and/or the withholding of payments otherwise due under the **Contract**.

ARTICLE 39. DUST HAZARDS

39.1 Should a harmful dust hazard be created in performing the **Work** of this **Contract**, for the elimination of which appliances or methods have been approved by the Board of Standards and Appeals of the City of New York, such appliances and methods shall be installed, maintained, and effectively operated during the continuance of such harmful dust hazard. Failure to comply with this provision after notice shall make this **Contract** voidable at the sole discretion of the **City**.

CHAPTER IX
PARTIAL AND FINAL PAYMENTS

ARTICLE 40. CONTRACT PRICE

40.1 The **City** shall pay, and the **Contractor** agrees to accept, in full consideration for the **Contractor's** performance of the **Work** subject to the terms and conditions hereof, the lump sum price or unit prices for which this **Contract** was awarded, plus the amount required to be paid for any **Extra Work** ordered by the **Commissioner** under Article 25, less credit for any **Work** omitted pursuant to Article 29.

ARTICLE 41. BID BREAKDOWN ON LUMP SUM

41.1 Within fifteen (15) **Days** after the commencement date specified in the **Notice to Proceed** or **Order to Work**, unless otherwise directed by the **Resident Engineer**, the **Contractor** shall submit to the **Resident Engineer** a breakdown of its bid price, or of lump sums bid for items of the **Contract**, showing the various operations to be performed under the **Contract**, as directed in the progress schedule required under Article 9, and the value of each of such operations, the total of such items to equal the lump sum price bid. Said breakdown must be approved in writing by the **Resident Engineer**.

41.2 No partial payment will be approved until the **Contractor** submits a bid breakdown that is acceptable to the **Resident Engineer**.

41.3 The **Contractor** shall also submit such other information relating to the bid breakdown as directed by the **Resident Engineer**. Thereafter, the breakdown may be used only for checking the **Contractor's** applications for partial payments hereunder, but shall not be binding upon the **City**, the **Commissioner**, or the **Engineer** for any purpose whatsoever.

ARTICLE 42. PARTIAL PAYMENTS

42.1 From time to time as the **Work** progresses satisfactorily, but not more often than once each calendar month (except where the **Commissioner** approves in writing the submission of invoices on a more frequent basis and for invoices relating to **Work** performed pursuant to a change order), the **Contractor** may submit to the **Engineer** a requisition for a partial payment in the prescribed form, which shall contain an estimate of the quantity and the fair value of the **Work** done during the payment period.

42.2 Partial payments may be made for materials, fixtures, and equipment in advance of their actual incorporation in the **Work**, as the **Commissioner** may approve, and upon the terms and conditions set forth in the General Conditions.

such claim the total amount thereof, the various items of labor and materials included therein, and the alleged value of each item; and if the alleged claim be one for delay, the alleged cause of each such delay, the period or periods of time, giving the dates when the **Contractor** claims the performance of the **Work** or a particular part thereof was delayed, and an itemized statement and breakdown of the amount claimed for each such delay.

44.1.1(a) With respect to each such claim, the **Commissioner**, the **Comptroller** and, in the event of litigation, the **City** Corporation Counsel shall have the same right to inspect, and to make extracts or copies of, the **Contractor's** books, vouchers, records, etc., as is referred to in Articles 11, 27, 28, and 30. Nothing contained in this Article 44.1.1(a) is intended to or shall relieve the **Contractor** from the obligation of complying strictly with Articles 11, 27, 28, and 30. The **Contractor** is warned that unless such claims are completely set forth as herein required, the **Contractor** upon acceptance of the **Substantial Completion** payment pursuant to this Article 44, will have waived any such claims.

44.1.2 A **Final Approved Punch List**.

44.1.3 Where required, a request for an extension of time to achieve **Substantial Completion** or final extension of time.

44.2 The **Commissioner** shall issue a voucher calling for payment of any part or all of the balance due for **Work** performed under the **Contract**, including monies retained under Article 21, less any and all deductions authorized to be made by the **Commissioner**, under this **Contract** or by **Law**, and less twice the amount the **Commissioner** considers necessary to ensure the completion of the balance of the **Work** by the **Contractor**. Such a payment shall be considered a partial and not a final payment. No **Substantial Completion** payment shall be made under this Article 44 where the **Contractor** failed to complete the **Work** within the time fixed for such completion in the Schedule A of the General Conditions, or within the time to which completion may have been extended, until an extension or extensions of time for the completion of **Work** have been acted upon pursuant to Article 13.

44.3 No further partial payments shall be made to the **Contractor** after **Substantial Completion**, except the **Substantial Completion** payment and payment pursuant to any **Contractor's** requisition that were properly filed with the **Commissioner** prior to the date of **Substantial Completion**; however, the **Commissioner** may grant a waiver for further partial payments after the date of **Substantial Completion** to permit payments for change order **Work** and/or release of retainage and deposits pursuant to Articles 21 and 24. Such waiver shall be in writing.

44.4 The **Contractor** acknowledges that nothing contained in this Article 44 is intended to or shall in any way diminish the force and effect of Article 13.

ARTICLE 45. FINAL PAYMENT

45.1 After completion and **Final Acceptance** of the **Work**, the **Contractor** shall submit all required certificates and documents, together with a requisition for the balance claimed to be due under the **Contract**, less the amount authorized to be retained for maintenance under Article 24. Such submission shall be within 90 days of the date of the **Commissioner's** written determination of **Final Acceptance**, or within such additional time as may be granted by the **Commissioner** in writing. If the **Contractor** fails to submit all required certificates and documents within the time allowed, no payment of the balance claimed shall be made to the **Contractor** and the **Contractor** shall be deemed to have forfeited its right to

42.3 The **Contractor** shall also submit to the **Commissioner** in connection with every application for partial payment a verified statement in the form prescribed by the **Comptroller** setting forth the information required under Labor Law Section 220-a.

42.4 Within thirty (30) **Days** after receipt of a satisfactory payment application, and within sixty (60) **Days** after receipt of a satisfactory payment application in relation to **Work** performed pursuant to a change order, the **Engineer** will prepare and certify, and the **Commissioner** will approve, a voucher for a partial payment in the amount of such approved estimate, less any and all deductions authorized to be made by the **Commissioner** under the terms of this **Contract** or by **Law**.

ARTICLE 43. PROMPT PAYMENT

43.1 The Prompt Payment provisions of the **PPB** Rules in effect at the time of the bid will be applicable to payments made under this **Contract**. The provisions require the payment to the **Contractor** of interest on payments made after the required payment date, except as set forth in the **PPB** Rules.

43.2 The **Contractor** shall submit a proper invoice to receive payment, except where the **Contract** provides that the **Contractor** will be paid at predetermined intervals without having to submit an invoice for each scheduled payment.

43.3 Determination of interest due will be made in accordance with the **PPB** Rules.

43.4 If the **Contractor** is paid interest, the proportionate share(s) of that interest shall be forwarded by the **Contractor** to its **Subcontractor(s)**.

43.5 The **Contractor** shall pay each **Subcontractor** or **Materialman** not later than seven (7) **Days** after receipt of payment out of amounts paid to the **Contractor** by the **City** for **Work** performed by the **Subcontractor** or **Materialman** under this **Contract**.

> 43.5.1 If **Contractor** fails to make any payment to any **Subcontractor** or **Materialman** within seven (7) **Days** after receipt of payment by the **City** pursuant to this Article 43.5, then the **Contractor** shall pay interest on amounts due to such **Subcontractor** or **Materialman** at the rate of interest in effect on the date such payment is made by the **Contractor** computed in accordance with Section 756-b (1)(b) of the New York General Business Law. Accrual of interest shall commence on the **Day** immediately following the expiration of the seventh **Day** following receipt of payment by the **Contractor** from the **City** and shall end on the date on which payment is made.

43.6 The **Contractor** shall include in each of its subcontracts a provision requiring each **Subcontractor** to make payment to each of its **Subcontractors** or **Materialmen** for **Work** performed under this **Contract** in the same manner and within the same time period set forth above.

ARTICLE 44. SUBSTANTIAL COMPLETION PAYMENT

44.1 The **Contractor** shall submit with the **Substantial Completion** requisition:

> 44.1.1 A final verified statement of any pending Article 27 disputes in accordance with the **PPB** Rules and this **Contract** and any and all alleged claims against the **City**, in any way connected with or arising out of this **Contract** (including those as to which details may have been furnished pursuant to Articles 11, 27, 28, and 30) setting forth with respect to each

payment of any balance claimed. A verified statement similar to that required in connection with applications for partial payments shall also be submitted to the **Commissioner**.

45.2 Amended Verified Statement of Claims: The **Contractor** shall also submit with the final requisition any amendments to the final verified statement of any pending dispute resolution procedures in accordance with the **PPB** Rules and this **Contract** and any and all alleged claims against the **City**, in any way connected with or arising out of this **Contract** (including those as to which details may have been furnished pursuant to Articles 11, 27, 28, and 30) that have occurred subsequent to **Substantial Completion**, setting forth with respect to each such claim the total amount thereof, the various items of labor and materials included therein, and the alleged value of each such item; and if the alleged claim be one for delay, the alleged cause of each such delay, the period or periods of time, giving the dates when the **Contractor** claims the performance of the **Work** or a particular part thereof was delayed, and an itemized statement and breakdown of the amount claimed for each such delay. With reference to each such claim, the **Commissioner**, the **Comptroller** and, in the event of litigation, the **City** Corporation Counsel shall have the same right to inspect, and to make extracts or copies of, the **Contractor's** books, vouchers, records, etc., as is referred to in Articles 11, 27, 28, and 30. Nothing contained in this Article 45.2, is intended to or shall relieve the **Contractor** from the obligation of complying strictly with Articles 11, 27, 28, and 30. The **Contractor** is warned that unless such claims are completely set forth as herein required, the **Contractor**, upon acceptance of the Final Payment pursuant to Article 46, will have waived any such claims.

45.3 Preparation of Final Voucher: Upon determining the balance due hereunder other than on account of claims, the **Engineer** will prepare and certify, for the Commissioner's approval, a voucher for final payment in that amount less any and all deductions authorized to be made by the **Commissioner** under this **Contract** or by **Law**. In the case of a lump sum **Contract**, the **Commissioner** shall certify the voucher for final payment within thirty (30) **Days** from the date of completion and acceptance of the **Work**, provided all requests for extensions of time have been acted upon.

45.3.1 All prior certificates and vouchers upon which partial payments were made, being merely estimates made to enable the **Contractor** to prosecute the **Work** more advantageously, shall be subject to correction in the final voucher, and the certification of the **Engineer** thereon and the approval of the **Commissioner** thereof, shall be conditions precedent to the right of the **Contractor** to receive any money hereunder. Such final voucher shall be binding and conclusive upon the **Contractor**.

45.3.2 Payment pursuant to such final voucher, less any deductions authorized to be made by the **Commissioner** under this **Contract** or by **Law**, shall constitute the final payment, and shall be made by the **Comptroller** within thirty (30) **Days** after the filing of such voucher in his/her office.

45.4 The **Contractor** acknowledges that nothing contained in this Article 45 is intended to or shall in any way diminish the force and effect of Article 13.

ARTICLE 46. ACCEPTANCE OF FINAL PAYMENT

46.1 The acceptance by the **Contractor**, or by anyone claiming by or through it, of the final payment, whether such payment be made pursuant to any judgment of any court, or otherwise, shall constitute and operate as a release of the **City** from any and all claims of and liability to the **Contractor** for anything heretofore done or furnished for the **Contractor** relating to or arising out of this **Contract** and the **Work** done hereunder, and for any prior act, neglect or default on the part of the **City** or any of its officials, agents or employees, excepting only a claim against the **City** for the amounts deducted or retained in accordance with the terms and provisions of this **Contract** or by **Law**, and excepting any

claims, not otherwise waived, or any pending dispute resolution procedures which are contained in the verified statement filed with the **Contractor's** substantial and final requisitions pursuant to Articles 44 and 45.

46.2 The **Contractor** is warned that the execution by it of a release, in connection with the acceptance of the final payment, containing language purporting to reserve claims other than those herein specifically excepted from the operation of this Article 46, or those for amounts deducted by the **Commissioner** from the final requisition or from the final payment as certified by the **Engineer** and approved by the **Commissioner**, shall not be effective to reserve such claims, anything stated to the **Contractor** orally or in writing by any official, agent or employee of the **City** to the contrary notwithstanding.

46.3 Should the **Contractor** refuse to accept the final payment as tendered by the **Comptroller**, it shall constitute a waiver of any right to interest thereon.

46.4 The **Contractor**, however, shall not be barred by this Article 46 from commencing an action for breach of **Contract** to the extent permitted by **Law** and by the terms of the **Contract** for any claims that are contained in the verified statement filed with the **Contractor's** substantial and final requisitions pursuant to Articles 44 and 45 or that arose after submission of the final payment requisition, provided that a detailed and verified statement of claim is served upon the contracting **Agency** and **Comptroller** not later than forty (40) **Days** after the making of such final payment by electronic funds transfer (EFT) or the mailing of such final payment. The statement shall specify the items upon which the claim will be based and any such claim shall be limited to such items.

ARTICLE 47. APPROVAL BY PUBLIC DESIGN COMMISSION

47.1 All works of art, including paintings, mural decorations, stained glass, statues, bas-reliefs, and other sculptures, monuments, fountains, arches, and other structures of a permanent character intended for ornament or commemoration, and every design of the same to be used in the performance of this **Contract**, and the design of all bridges, approaches, buildings, gates, fences, lamps, or structures to be erected, pursuant to the terms of this **Contract**, shall be submitted to the Art Commission, d/b/a the Public Design Commission of the City of New York, and shall be approved by the Public Design Commission prior to the erection or placing in position of the same. The final payment shall not become due or payable under this **Contract** unless and until the Public Design Commission shall certify that the design for the **Work** herein contracted for has been approved by the said Public Design Commission, and that the same has been executed in substantial accordance with the design so approved, pursuant to the provisions of Chapter 37, Section 854 of the **City** Charter, as amended.

CHAPTER X
CONTRACTOR'S DEFAULT

ARTICLE 48. COMMISSIONER'S RIGHT TO DECLARE CONTRACTOR IN DEFAULT

48.1 In addition to those instances specifically referred to in other Articles herein, the **Commissioner** shall have the right to declare the **Contractor** in default of this **Contract** if:

48.1.1 The **Contractor** fails to commence **Work** when notified to do so by the **Commissioner**; or
if

48.1.2 The **Contractor** shall abandon the **Work**; or if

48.1.3 The **Contractor** shall refuse to proceed with the **Work** when and as directed by the **Commissioner**; or if

48.1.4 The **Contractor** shall, without just cause, reduce its working force to a number which, if maintained, would be insufficient, in the opinion of the **Commissioner**, to complete the **Work** in accordance with the progress schedule; or if

48.1.5 The **Contractor** shall fail or refuse to increase sufficiently such working force when ordered to do so by the **Commissioner**; or if

48.1.6 The **Contractor** shall sublet, assign, transfer, convert or otherwise dispose of this **Contract** other than as herein specified; or sell or assign a majority interest in the **Contractor**; or if

48.1.7 The **Contractor** fails to secure and maintain all required insurance; or if

48.1.8 A receiver or receivers are appointed to take charge of the **Contractor's** property or affairs; or if

48.1.9 The **Commissioner** shall be of the opinion that the **Contractor** is or has been unnecessarily or unreasonably or willfully delaying the performance and completion of the **Work**, or the award of necessary subcontracts, or the placing of necessary material and equipment orders; or if

48.1.10 The **Commissioner** shall be of the opinion that the **Contractor** is or has been willfully or in bad faith violating any of the provisions of this **Contract**; or if

48.1.11 The **Commissioner** shall be of the opinion that the **Work** cannot be completed within the time herein provided therefor or within the time to which such completion may have been extended; provided, however, that the impossibility of timely completion is, in the **Commissioner's** opinion, attributable to conditions within the **Contractor's** control; or if

48.1.12 The **Work** is not completed within the time herein provided therefor or within the time to which the **Contractor** may be entitled to have such completion extended; or if

48.1.13 Any statement or representation of the **Contractor** in the **Contract** or in any document submitted by the **Contractor** with respect to the **Work**, the **Project**, or the **Contract** (or for purposes of securing the **Contract**) was untrue or incorrect when made; or if

48.1.14 The **Contractor** or any of its officers, directors, partners, five (5%) percent shareholders, principals, or other persons substantially involved in its activities, commits any of the acts or omissions specified as the grounds for debarment in the **PPB** Rules.

48.2 Before the **Commissioner** shall exercise his/her right to declare the **Contractor** in default, the **Commissioner** shall give the **Contractor** an opportunity to be heard, upon not less than two (2) **Days** notice.

ARTICLE 49. EXERCISE OF THE RIGHT TO DECLARE DEFAULT

49.1 The right to declare the **Contractor** in default for any of the grounds specified or referred to in Article 48 shall be exercised by sending the **Contractor** a notice, signed by the **Commissioner**, setting forth the ground or grounds upon which such default is declared (hereinafter referred to as a "Notice of Default").

49.2 The **Commissioner's** determination that the **Contractor** is in default shall be conclusive, final, and binding on the parties and such a finding shall preclude the **Contractor** from commencing a plenary action for any damages relating to the **Contract**. If the **Contractor** protests the determination of the **Commissioner**, the **Contractor** may commence an action in a court of competent jurisdiction of the State of New York under Article 78 of the New York Civil Practice Law and Rules.

ARTICLE 50. QUITTING THE SITE

50.1 Upon receipt of such notice the **Contractor** shall immediately discontinue all further operations under this **Contract** and shall immediately quit the **Site**, leaving untouched all plant, materials, equipment, tools, and supplies then on the **Site**.

ARTICLE 51. COMPLETION OF THE WORK

51.1 The **Commissioner**, after declaring the **Contractor** in default, may then have the **Work** completed by such means and in such manner, by contract with or without public letting, or otherwise, as he/she may deem advisable, utilizing for such purpose such of the **Contractor's** plant, materials, equipment, tools, and supplies remaining on the **Site**, and also such **Subcontractors**, as he/she may deem advisable.

51.2 After such completion, the **Commissioner** shall make a certificate stating the expense incurred in such completion, which shall include the cost of re-letting and also the total amount of liquidated damages (at the rate provided for in the **Contract**) from the date when the **Work** should have been completed by the **Contractor** in accordance with the terms hereof to the date of actual completion of the **Work**. Such certificate shall be binding and conclusive upon the **Contractor**, its sureties, and any person claiming under the **Contractor**, as to the amount thereof.

51.3 The expense of such completion, including any and all related and incidental costs, as so certified by the **Commissioner**, and any liquidated damages assessed against the **Contractor**, shall be charged against and deducted out of monies which are earned by the **Contractor** prior to the date of default. Should the expense of such completion, as certified by the **Commissioner**, exceed the total sum which would have been payable under the **Contract** if it had been completed by the **Contractor**, any excess shall be paid by the **Contractor**.

ARTICLE 52. PARTIAL DEFAULT

52.1 In case the **Commissioner** shall declare the **Contractor** in default as to a part of the **Work** only, the **Contractor** shall discontinue such part, shall continue performing the remainder of the **Work** in strict conformity with the terms of this **Contract**, and shall in no way hinder or interfere with any **Other**

Contractor(s) or persons whom the **Commissioner** may engage to complete the **Work** as to which the **Contractor** was declared in default.

52.2 The provisions of this Chapter relating to declaring the **Contractor** in default as to the entire **Work** shall be equally applicable to a declaration of partial default, except that the **Commissioner** shall be entitled to utilize for completion of the part of the **Work** as to which the **Contractor** was declared in default only such plant, materials, equipment, tools, and supplies as had been previously used by the **Contractor** on such part.

ARTICLE 53. PERFORMANCE OF UNCOMPLETED WORK

53.1 In completing the whole or any part of the **Work** under the provisions of this Chapter X, the **Commissioner** shall have the power to depart from or change or vary the terms and provisions of this **Contract**, provided, however, that such departure, change or variation is made for the purpose of reducing the time or expense of such completion. Such departure, change or variation, even to the extent of accepting a lesser or different performance, shall not affect the conclusiveness of the **Commissioner's** certificate of the cost of completion referred to in Article 51, nor shall it constitute a defense to an action to recover the amount by which such certificate exceeds the amount which would have been payable to the **Contractor** hereunder but for its default.

ARTICLE 54. OTHER REMEDIES

54.1 In addition to the right to declare the **Contractor** in default pursuant to this Chapter X, the **Commissioner** shall have the absolute right, in his/her sole discretion and without a hearing, to complete or cause to be completed in the same manner as described in Articles 51 and 53, any or all unsatisfactory or uncompleted punch list **Work** that remains after the completion date specified in the **Final Approved Punch List**. A written notice of the exercise of this right shall be sent to the **Contractor** who shall immediately quit the **Site** in accordance with the provisions of Article 50.

54.2 The expense of completion permitted under Article 54.1, including any and all related and incidental costs, as so certified by the **Commissioner**, shall be charged against and deducted out of monies which have been earned by the **Contractor** prior to the date of the exercise of the right set forth in Article 54.1; the balance of such monies, if any, subject to the other provisions of this **Contract**, to be paid to the **Contractor** without interest after such completion. Should the expense of such completion, as certified by the **Commissioner**, exceed the total sum which would have been payable under the **Contract** if it had been completed by the **Contractor**, any excess shall be paid by the **Contractor**.

54.3 The previous provisions of this Chapter X shall be in addition to any and all other remedies available under **Law** or in equity.

54.4 The exercise by the **City** of any remedy set forth herein shall not be deemed a waiver by the **City** of any other legal or equitable remedy contained in this **Contract** or provided under **Law**.

CHAPTER XI
MISCELLANEOUS PROVISIONS

ARTICLE 55. CONTRACTOR'S WARRANTIES

55.1 In consideration of, and to induce, the award of this **Contract** to the **Contractor**, the **Contractor** represents and warrants:

55.1.1 That it is financially solvent, sufficiently experienced and competent to perform the **Work**; and

55.1.2 That the facts stated in its bid and the information given by it pursuant to the Information for Bidders is true and correct in all respects; and

55.1.3 That it has read and complied with all requirements set forth in the **Contract**.

ARTICLE 56. CLAIMS AND ACTIONS THEREON

56.1 Any claim, that is not subject to dispute resolution under the **PPB** Rules or this **Contract**, against the **City** for damages for breach of **Contract** shall not be made or asserted in any action, unless the **Contractor** shall have strictly complied with all requirements relating to the giving of notice and of information with respect to such claims, as herein before provided.

56.2 Nor shall any action be instituted or maintained on any such claims unless such action is commenced within six (6) months after **Substantial Completion**; except that:

56.2.1 Any claims arising out of events occurring after **Substantial Completion** and before **Final Acceptance** of the **Work** shall be asserted within six (6) months of **Final Acceptance** of the **Work**;

56.2.2 Any claims for monies deducted, retained or withheld under the provisions of this **Contract** shall be asserted within six (6) months after the date when such monies otherwise become due and payable hereunder; and

56.2.3 If the **Commissioner** exercises his/her right to terminate the **Contract** pursuant to Article 64, any such action shall be commenced within six (6) months of the date the **Commissioner** exercises said right.

ARTICLE 57. INFRINGEMENT

57.1 The **Contractor** shall be solely responsible for and shall defend, indemnify, and hold the **City** harmless from any and all claims (even if the allegations of the lawsuit are without merit) and judgments for damages and from costs and expenses to which the **City** may be subject to or which it may suffer or incur allegedly arising out of or in connection with any infringement by the **Contractor** of any copyright, trade secrets, trademark or patent rights or any other property or personal right of any third party by the **Contractor** and/or its **Subcontractors** in the performance or completion of the **Work**. Insofar as the facts or **Law** relating to any claim would preclude the **City** from being completely indemnified by the **Contractor**, the **City** shall be partially indemnified by the **Contractor** to the fullest extent permitted by **Law**.

ARTICLE 58. NO CLAIM AGAINST OFFICIALS, AGENTS OR EMPLOYEES

58.1 No claim whatsoever shall be made by the **Contractor** against any official, agent or employee of the **City** for, or on account of, anything done or omitted to be done in connection with this **Contract.**

ARTICLE 59. SERVICE OF NOTICES

59.1 The **Contractor** hereby designates the business address, fax number, and email address specified in its bid, as the place where all notices, directions or other communications to the **Contractor** may be delivered, or to which they may be mailed. Any notice, direction, or communication from either party to the other shall be in writing and shall be deemed to have been given when (i) delivered personally; (ii) sent by certified mail, return receipt requested; (iii) delivered by overnight or same day courier service in a properly addressed envelope with confirmation; or (iv) sent by fax or email and, unless receipt of the fax or e-mail is acknowledged by the recipient by fax or e-mail, deposited in a post office box regularly maintained by the United States Postal Service in a properly addressed, postage pre-paid envelope.

59.2 **Contractor's** notice address, email address, or fax number may be changed at any time by an instrument in writing, executed and acknowledged by the **Contractor**, and delivered to the **Commissioner.**

59.3 Nothing herein contained shall, however, be deemed to preclude or render inoperative the service of any notice, direction or other communication upon the **Contractor** personally, or, if the **Contractor** is a corporation, upon any officer thereof.

ARTICLE 60. UNLAWFUL PROVISIONS DEEMED STRICKEN FROM CONTRACT

60.1 If this **Contract** contains any unlawful provision not an essential part of the **Contract** and which shall not appear to have been a controlling or material inducement to the making thereof, the same shall be deemed of no effect and shall, upon notice by either party, be deemed stricken from the **Contract** without affecting the binding force of the remainder.

ARTICLE 61. ALL LEGAL PROVISIONS DEEMED INCLUDED

61.1 It is the intent and understanding of the parties to this **Contract** that each and every provision of **Law** required to be inserted in this **Contract** shall be and is inserted herein. Furthermore, it is hereby stipulated that every such provision is to be deemed to be inserted herein, and if, through mistake or otherwise, any such provision is not inserted, or is not inserted in correct form, then this **Contract** shall forthwith upon the application of either party be amended by such insertion so as to comply strictly with the **Law** and without prejudice to the rights of either party hereunder.

ARTICLE 62. TAX EXEMPTION

62.1 The **City** is exempt from payment of Federal, State, and local taxes, including sales and compensating use taxes of the State of New York and its cities and counties on all tangible personal property sold to the **City** pursuant to the provisions of this **Contract.** These taxes are not to be included in bids. However, this exemption does not apply to tools, machinery, equipment or other property leased by or to the **Contractor, Subcontractor** or **Materialman** or to tangible personal property which, even

though it is consumed, is not incorporated into the completed **Work** (consumable supplies) and tangible personal property that the **Contractor** is required to remove from the **Site** during or upon completion of the **Work**. The **Contractor** and its **Subcontractors** and **Materialmen** shall be responsible for and pay any and all applicable taxes, including sales and compensating use taxes, on such leased tools, machinery, equipment or other property and upon all such consumable supplies and tangible personal property that the **Contractor** is required to remove from the **Site** during or upon completion of the **Work**.

62.2 The **Contractor** agrees to sell and the **City** agrees to purchase all tangible personal property, other than consumable supplies and other tangible personal property that the **Contractor** is required to remove from the **Site** during or upon completion of the **Work**, that is required, necessary or proper for or incidental to the construction of the **Project** covered by this **Contract**. The sum paid under this **Contract** for such tangible personal property shall be in full payment and consideration for the sale of such tangible personal property.

62.2.1 The **Contractor** agrees to construct the **Project** and to perform all **Work**, labor and services rendered, necessary, proper or incidental thereto for the sum shown in the bid for the performance of such **Work**, labor, and services, and the sum so paid pursuant to this **Contract** for such **Work**, labor, and services, shall be in full consideration for the performance by the **Contractor** of all its duties and obligations under this **Contract** in connection with said **Work**, labor, and services.

62.3 20 NYCRR Section 541.3(d) provides that a **Contractor**'s purchases of tangible personal property that is either incorporated into real property owned by a governmental entity or purchased for and sold to a governmental entity are exempt from sales and use tax. The **City** shall not pay sales tax for any such tangible personal property that it purchases from the **Contractor** pursuant to the **Contract.** With respect to such tangible personal property, the **Contractor**, at the request of the **City**, shall furnish to the **City** such bills of sale and other instruments as may be required by the **City**, properly executed, acknowledged and delivered assuring to the **City** title to such tangible personal property, free of liens and/or encumbrances, and the **Contractor** shall mark or otherwise identify all such tangible personal property as the property of the **City**.

62.4 Title to all tangible personal property to be sold by the **Contractor** to the **City** pursuant to the provisions of the **Contract** shall immediately vest in and become the sole property of the **City** upon delivery of such tangible personal property to the **Site**. Notwithstanding such transfer of title, the **Contractor** shall have the full and continuing responsibility to install such tangible personal property in accordance with the provisions of this **Contract**, protect it, maintain it in a proper condition and forthwith repair, replace and make good any damage thereto, theft or disappearance thereof, and furnish additional tangible personal property in place of any that may be lost, stolen or rendered unusable, without cost to the **City**, until such time as the **Work** covered by the **Contract** is fully accepted by the **City**. Such transfer of title shall in no way affect any of the **Contractor's** obligations hereunder. In the event that, after title has passed to the **City**, any of the tangible personal property is rejected as being defective or otherwise unsatisfactory, title to all such tangible personal property shall be deemed to have been transferred back to the **Contractor**.

62.5 The purchase by **Subcontractors** or **Materialmen** of tangible personal property to be sold hereunder shall be a purchase or procurement for resale to the **Contractor** (either directly or through other **Subcontractors**) and therefore not subject to the aforesaid sales and compensating use taxes, provided that the subcontracts and purchase agreements provide for the resale of such tangible personal property and that such subcontracts and purchase agreements are in a form similar to this **Contract** with respect to the separation of the sale of consumable supplies and tangible personal property that the **Contractor** is required to remove from the **Site** during or upon completion of the **Work** from the **Work** and labor, services, and any other matters to be provided, and provided further that the subcontracts and

purchase agreements provide separate prices for tangible personal property and all other services and matters. Such separation shall actually be followed in practice, including the separation of payments for tangible personal property from the payments for other **Work** and labor and other things to be provided.

62.6 The **Contractor** and its **Subcontractors** and **Materialmen** shall furnish a **Contractor** Exempt Purchase Certificate to all persons, firms or corporations from which they purchase tangible personal property for the performance of the **Work** covered by this **Contract.**

62.7 In the event any of the provisions of this Article 62 shall be deemed to be in conflict with any other provisions of this **Contract** or create any ambiguity, then the provisions of this Article 62 shall control.

ARTICLE 63. INVESTIGATION(S) CLAUSE

63.1 The parties to this **Contract** agree to cooperate fully and faithfully with any investigation, audit or inquiry conducted by a United States, a State of New York (State) or a **City** governmental agency or authority that is empowered directly or by designation to compel the attendance of witnesses and to examine witnesses under oath, or conducted by the Inspector General of a governmental agency that is a party in interest to the transaction, submitted bid, submitted proposal, contract, lease, permit or license that is the subject of the investigation, audit or inquiry.

63.2 If any person who has been advised that his/her statement, and any information from such statement, will not be used against him/her in any subsequent criminal proceeding refuses to testify before a grand jury or other governmental agency or authority empowered directly or by designation to compel the attendance of witnesses and to examine witnesses under oath concerning the award of or performance under any transaction, agreement, lease, permit, contract, or license entered into with the **City**, the State, or any political subdivision or public authority thereof, or the Port Authority of New York and New Jersey, or any local development corporation within the **City**, or any public benefit corporation organized under the **Laws** of the State of New York, or;

63.3 If any person refuses to testify for a reason other than the assertion of his/her privilege against self incrimination in an investigation, audit or inquiry conducted by a **City** or State governmental agency or authority empowered directly or by designation to compel the attendance of witnesses and to take testimony under oath, or by the Inspector General of the governmental agency that is a party in interest in, and is seeking testimony concerning the award of, or performance under any transaction, agreement, lease, permit, contract, or license entered into with the **City**, the State, or any political subdivision thereof or any local development corporation within the **City**, then;

63.4 The **Commissioner** whose **Agency** is a party in interest to the transaction, submitted bid, submitted proposal, contract, lease, permit, or license shall convene a hearing, upon not less than five (5) **Days'** written notice to the parties involved to determine if any penalties should attach for the failure of a person to testify.

63.5 If any non-governmental party to the hearing requests an adjournment, the **Commissioner** who convened the hearing may, upon granting the adjournment, suspend any contract, lease, permit, or license, pending the final determination pursuant to Article 63.7 without the **City** incurring any penalty or damages for delay or otherwise.

63.6 The penalties which may attach after a final determination by the **Commissioner** may include but shall not exceed:

63.6.1 The disqualification for a period not to exceed five (5) years from the date of an adverse determination for any person, or any entity of which such person was a member at the time the testimony was sought, from submitting bids for, or transacting business with, or entering into or obtaining any contract, lease, permit or license with or from the **City**; and/or

63.6.2 The cancellation or termination of any and all such existing **City** contracts, leases, permits or licenses that the refusal to testify concerns and that have not been assigned as permitted under this **Contract**, nor the proceeds of which pledged, to an unaffiliated and unrelated institutional lender for fair value prior to the issuance of the notice scheduling the hearing, without the **City** incurring any penalty or damages on account of such cancellation or termination; monies lawfully due for goods delivered, work done, rentals, or fees accrued prior to the cancellation or termination shall be paid by the **City**.

63.7 The **Commissioner** shall consider and address in reaching his/her determination and in assessing an appropriate penalty the factors in Articles 63.7.1 and 63.7.2. The **Commissioner** may also consider, if relevant and appropriate, the criteria established in Articles 63.7.3 and 63.7.4, in addition to any other information which may be relevant and appropriate:

63.7.1 The party's good faith endeavors or lack thereof to cooperate fully and faithfully with any governmental investigation or audit, including but not limited to the discipline, discharge, or disassociation of any person failing to testify, the production of accurate and complete books and records, and the forthcoming testimony of all other members, agents, assignees or fiduciaries whose testimony is sought.

63.7.2 The relationship of the person who refused to testify to any entity that is a party to the hearing, including but not limited to, whether the person whose testimony is sought has an ownership interest in the entity and/or the degree of authority and responsibility the person has within the entity.

63.7.3 The nexus of the testimony sought to the subject entity and its contracts, leases, permits or licenses with the **City**.

63.7.4 The effect a penalty may have on an unaffiliated and unrelated party or entity that has a significant interest in an entity subject to penalties under Article 63.6, provided that the party or entity has given actual notice to the **Commissioner** upon the acquisition of the interest, or at the hearing called for in Article 63.4, gives notice and proves that such interest was previously acquired. Under either circumstance the party or entity shall present evidence at the hearing demonstrating the potential adverse impact a penalty will have on such person or entity.

63.8 Definitions:

63.8.1 The term "license" or "permit" as used in this Article 63 shall be defined as a license, permit, franchise or concession not granted as a matter of right.

63.8.2 The term "person" as used in this Article 63 shall be defined as any natural person doing business alone or associated with another person or entity as a partner, director, officer, principal or employee.

63.8.3 The term "entity" as used in this Article 63 shall be defined as any firm, partnership, corporation, association, joint venture, or person that receives monies, benefits, licenses, leases, or permits from or through the **City** or otherwise transacts business with the **City**.

63.8.4 The term "member" as used in this Article 63 shall be defined as any person associated with another person or entity as a partner, director, officer, principal or employee.

63.9 In addition to and notwithstanding any other provision of this **Contract**, the **Commissioner** may in his/her sole discretion terminate this **Contract** upon not less than three (3) **Days'** written notice in the event the **Contractor** fails to promptly report in writing to the **Commissioner** of the Department of Investigations ("DOI") of the **City** any solicitation of money, goods, requests for future employment or other benefit or thing of value, by or on behalf of any employee of the **City** or other person, firm, corporation or entity for any purpose which may be related to the procurement or obtaining of this **Contract** by the **Contractor**, or affecting the performance of this **Contract**.

ARTICLE 64. TERMINATION BY THE CITY

64.1 In addition to termination pursuant to any other article of this **Contract**, the **Commissioner** may, at any time, terminate this **Contract** by written notice to the **Contractor**. In the event of termination, the **Contractor** shall, upon receipt of such notice, unless otherwise directed by the **Commissioner**:

64.1.1 Stop **Work** on the date specified in the notice;

64.1.2 Take such action as may be necessary for the protection and preservation of the **City's** materials and property;

64.1.3 Cancel all cancelable orders for material and equipment;

64.1.4 Assign to the **City** and deliver to the **Site** or another location designated by the **Commissioner**, any non-cancelable orders for material and equipment that is not capable of use except in the performance of this **Contract** and has been specifically fabricated for the sole purpose of this **Contract** and not incorporated in the **Work**;

64.1.5 Take no action which will increase the amounts payable by the **City** under this **Contract**.

64.2 In the event of termination by the **City** pursuant to this Article 64, payment to the **Contractor** shall be in accordance with Articles 64.2.1, 64.2.2 or 64.2.3, to the extent that each respective article applies.

64.2.1 Lump Sum Contracts or Items: On all lump sum **Contracts**, or on lump sum items in a **Contract**, the **City** will pay the **Contractor** the sum of the amounts described in Articles 64.2.1(a) and 64.2.1(b), less all payments previously made pursuant to this **Contract**. On lump sum **Contracts** only, the **City** will also pay the **Contractor** an additional sum as provided in Article 64.2.1(c).

64.2.1(a) For **Work** completed prior to the notice of termination, the **Contractor** shall be paid a pro rata portion of the lump sum bid amount, plus approved change orders, based upon the percent completion of the **Work**, as determined by the **Commissioner**. For the purpose of determining the pro rata portion of the lump sum bid amount to which the **Contractor** is entitled, the bid breakdown submitted in accordance with Article 41 shall be considered, but shall not be dispositive. The **Commissioner's** determination hereunder shall be final, binding, and conclusive.

64.2.1(b) For non-cancelable material and equipment that is not capable of use except in the performance of this **Contract** and has been specifically fabricated for the sole purpose of this **Contract**, but not yet incorporated in the **Work**, the **Contractor** shall be paid the lesser of the following, less salvage value:

64.2.1(b)(i) The Direct Cost, as defined in Article 64.2.4; or

64.2.1(b)(ii) The fair and reasonable value, if less than Direct Cost, of such material and equipment, plus necessary and reasonable delivery costs.

64.2.1(b)(iii) In addition, the **Contractor** shall be paid five (5%) percent of the amount described in Article 64.2.1(b)(i) or Article 64.2.1(b)(ii), whichever applies.

64.2.1(c) Except as otherwise provided in Article 64.2.1(d), on all lump sum **Contracts**, the **Contractor** shall be paid the percentage indicated below applied to the difference between the total lump sum bid amount and the total of all payments made prior to the notice of termination plus all payments allowed pursuant to Articles 64.2.1(a) and 64.2.1(b):

64.2.1(c)(i) Five (5%) percent of the first five million ($5,000,000) dollars; and

64.2.1(c)(ii) Three (3%) percent of any amount between five million ($5,000,000) dollars and fifteen million ($15,000,000) dollars; plus

64.2.1(c)(iii) One (1%) percent of any amount over fifteen million ($15,000,000) dollars.

64.2.1(d) In the event the **City** terminates a lump sum **Contract** pursuant to this Article 64 within ninety (90) **Days** after registration of the **Contract** with the **Comptroller**, the **Contractor** shall be paid one (1%) percent of the difference between the lump sum bid amount and the total of all payments made pursuant to this Article 64.2.

64.2.2 Unit Price Contracts or Items: On all unit price **Contracts**, or on unit price items in a **Contract**, the **City** will pay the **Contractor** the sum of the amounts described in Articles 64.2.2(a) and 64.2.2(b), less all payments previously made pursuant to this **Contract**:

64.2.2(a) For all completed units, the unit price stated in the **Contract**, and

64.2.2(b) For units that have been ordered but are only partially completed, the **Contractor** will be paid:

64.2.2(b)(i) A pro rata portion of the unit price stated in the **Contract** based upon the percent completion of the unit and

64.2.2(b)(ii) For non-cancelable material and equipment, payment will be made pursuant to Article 64.2.1(b).

64.2.3 Time and Materials Contracts or Items Based on Time and Material Records: On all **Contracts** or items in a **Contract** where payment for the **Work** is based on time and

material records, the **Contractor** shall be paid in accordance with Article 26, less all payments previously made pursuant to this **Contract**.

64.2.4 Direct Costs: Direct Costs as used in this Article 64.2 shall mean:

64.2.4(a) The actual purchase price of material and equipment, plus necessary and reasonable delivery costs,

64.2.4(b) The actual cost of labor involved in construction and installation at the **Site**, and

64.2.4(c) The actual cost of necessary bonds and insurance purchased pursuant to requirements of this **Contract** less any amounts that have been or should be refunded by the **Contractor's** sureties or insurance carriers.

64.2.4(d) Direct Costs shall not include overhead.

64.3 In no event shall any payments under this Article 64 exceed the **Contract** price for such items.

64.4 All payments pursuant to Article 64 shall be in the nature of liquidated damages and shall be accepted by the **Contractor** in full satisfaction of all claims against the **City**.

64.5 The **City** may deduct or set off against any sums due and payable pursuant to this Article 64, any deductions authorized by this **Contract** or by **Law** (including but not limited to liquidated damages) and any claims it may have against the **Contractor**. The **City's** exercise of the right to terminate the **Contract** pursuant to this Article 64 shall not impair or otherwise effect the **City's** right to assert any claims it may have against the **Contractor** in a plenary action.

64.6 Where the **Work** covered by the **Contract** has been substantially completed, as determined in writing by the **Commissioner**, termination of the **Work** shall be handled as an omission of **Work** pursuant to Articles 29 and 33, in which case a change order will be issued to reflect an appropriate reduction in the **Contract** sum, or if the amount is determined after final payment, such amount shall be paid by the **Contractor**.

ARTICLE 65. CHOICE OF LAW, CONSENT TO JURISDICTION AND VENUE

65.1 This **Contract** shall be deemed to be executed in the **City** regardless of the domicile of the **Contractor**, and shall be governed by and construed in accordance with the **Laws** of the State of New York and the **Laws** of the United States, where applicable.

65.2 The parties agree that any and all claims asserted against the **City** arising under this **Contract** or related thereto shall be heard and determined in the courts of the State of New York ("New York State Courts") located in the **City** and County of New York. To effect this **Contract** and intent, the **Contractor** agrees:

65.2.1 If the **City** initiates any action against the **Contractor** in Federal court or in a New York State Court, service of process may be made on the **Contractor** either in person, wherever such **Contractor** may be found, or by registered mail addressed to the **Contractor** at its address as set forth in this **Contract**, or to such other address as the **Contractor** may provide to the **City** in writing; and

65.2.2 With respect to any action between the **City** and the **Contractor** in a New York State Court, the **Contractor** hereby expressly waives and relinquishes any rights it might otherwise have:

65.2.2(a) To move to dismiss on grounds of forum non conveniens;

65.2.2(b) To remove to Federal Court; and

65.2.2(c) To move for a change of venue to a New York State Court outside New York County.

65.2.3 With respect to any action brought by the **City** against the **Contractor** in a Federal Court located in the **City**, the **Contractor** expressly waives and relinquishes any right it might otherwise have to move to transfer the action to a Federal Court outside the **City**.

65.2.4 If the **Contractor** commences any action against the **City** in a court located other than in the **City** and County of New York, upon request of the **City**, the **Contractor** shall either consent to a transfer of the action to a New York State Court of competent jurisdiction located in the **City** and County of New York or, if the Court where the action is initially brought will not or cannot transfer the action, the **Contractor** shall consent to dismiss such action without prejudice and may thereafter reinstate the action in a New York State Court of competent jurisdiction in New York County.

65.3 If any provision(s) of this Article 65 is held unenforceable for any reason, each and all other provision(s) shall nevertheless remain in full force and effect.

ARTICLE 66. PARTICIPATION IN AN INTERNATIONAL BOYCOTT

66.1 The **Contractor** agrees that neither the **Contractor** nor any substantially owned affiliated company is participating or shall participate in an international boycott in violation of the provisions of the Federal Export Administration Act of 1979, as amended, or the regulations of the United States Department of Commerce (Commerce Department) promulgated thereunder.

66.2 Upon the final determination by the Commerce Department or any other agency of the United States as to, or conviction of the **Contractor** or a substantially-owned affiliated company thereof for participation in an international boycott in violation of the provisions of the Export Administration Act of 1979, as amended, or the regulations promulgated thereunder, the **Comptroller** may, at his/her option, render forfeit and void this **Contract**.

66.3 The **Contractor** shall comply in all respects, with the provisions of Section 6-114 of the Administrative Code and the rules and regulations issued by the **Comptroller** thereunder.

ARTICLE 67. LOCALLY BASED ENTERPRISE PROGRAM

67.1 This **Contract** is subject to the requirements of Section 6-108.1 of the Administrative Code and regulations promulgated thereunder. No construction contract shall be awarded unless and until these requirements have been complied with in their entirety; however, compliance with this Article 67 is not required if the Agency sets Subcontractor Participation Goals for Minority- and Women-Owned Business Enterprises (M/WBEs).

67.2 Unless specifically waived by the **Commissioner** with the approval of the Division of Economic and Financial Opportunity of the **City** Department of Business Services, if any portion of the **Contract** is subcontracted, not less than ten (10%) percent of the total dollar amount of the **Contract** shall be awarded to locally based enterprises (LBEs); except that where less than ten (10%) percent of the total dollar amount of the **Contract** is subcontracted, such lesser percentage shall be so awarded.

67.3 The **Contractor** shall not require performance and payment bonds from LBE **Subcontractors**.

67.4 If the **Contractor** has indicated prior to award that no **Work** will be subcontracted, no **Work** shall be subcontracted without the prior approval of the **Commissioner**, which shall be granted only if the **Contractor** makes a good faith effort beginning at least six (6) weeks before the **Work** is to be performed to obtain LBE **Subcontractors** to perform the **Work**.

67.5 If the **Contractor** has not identified sufficient LBE **Subcontractors** prior to award, it shall sign a letter of compliance stating that it complies with Section 6-108.1 of the Administrative Code, recognizes that achieving the LBE requirement is a condition of its **Contract**, and shall submit documentation demonstrating its good faith efforts to obtain LBEs. After award, the **Contractor** shall begin to solicit LBE's to perform subcontracted **Work** at least six (6) weeks before the date such **Work** is to be performed and shall demonstrate that a good faith effort has been made to obtain LBEs on each subcontract until it meets the required percentage.

67.6 Failure of the **Contractor** to comply with the requirements of Section 6-108.1 of the Administrative Code and the regulations promulgated thereunder shall constitute a material breach of this **Contract**. Remedy for such breach may include the imposition of any or all of the following sanctions:

67.6.1 Reducing the **Contractor's** compensation by an amount equal to the dollar value of the percentage of the LBE subcontracting requirement not complied with;

67.6.2 Declaring the **Contractor** in default;

67.6.3 If the **Contractor** is an LBE, de-certifying and declaring the **Contractor** ineligible to participate in the LBE program for a period of up to three (3) years.

ARTICLE 68. ANTITRUST

68.1 The **Contractor** hereby assigns, sells, and transfers to the **City** all right, title, and interest in and to any claims and causes of action arising under the antitrust **Laws** of New York State or of the United States relating to the particular goods or services purchased or procured by the **City** under this **Contract**.

ARTICLE 69. MacBRIDE PRINCIPLES PROVISIONS

69.1 Notice To All Prospective **Contractors**:

69.1.1 Local Law No. 34 of 1991 became effective on September 10, 1991 and added Section 6-115.1 of the Administrative Code. The local **Law** provides for certain restrictions on **City Contracts** to express the opposition of the people of the **City** to employment discrimination practices in Northern Ireland to promote freedom of work-place opportunity.

69.1.2 Pursuant to Section 6-115.1, prospective **Contractors** for **Contracts** to provide goods or services involving an expenditure of an amount greater than ten thousand

($10,000.) dollars, or for construction involving an amount greater than fifteen thousand ($15,000.) dollars, are asked to sign a rider in which they covenant and represent, as a material condition of their **Contract**, that any business operations in Northern Ireland conducted by the **Contractor** and any individual or legal entity in which the **Contractor** holds a ten (10%) percent or greater ownership interest in the **Contractor** will be conducted in accordance with the MacBride Principles of nondiscrimination in employment.

69.1.3 Prospective **Contractors** are not required to agree to these conditions. However, in the case of **Contracts** let by competitive sealed bidding, whenever the lowest responsible bidder has not agreed to stipulate to the conditions set forth in this notice and another bidder who has agreed to stipulate to such conditions has submitted a bid within five (5%) percent of the lowest responsible bid for a **Contract** to supply goods, services or contraction of comparable quality, the **Agency** shall refer such bids to the Mayor, the Speaker or other officials, as appropriate, who may determine, in accordance with applicable **Law**, that it is in the best interest of the **City** that the **Contract** be awarded to other than the lowest responsible pursuant to Section 313(b)(2) of the **City** Charter.

69.1.4 In the case of **Contracts** let by other than competitive sealed bidding, if a prospective **Contractor** does not agree to these conditions, no **Agency**, elected official or the **City** Council shall award the **Contract** to that bidder unless the **Agency** seeking to use the goods, services or construction certifies in writing that the **Contract** is necessary for the **Agency** to perform its functions and there is no other responsible **Contractor** who will supply goods, services or construction of comparable quality at a comparable price.

69.2 In accordance with Section 6-115.1 of the Administrative Code, the **Contractor** stipulates that such **Contractor** and any individual or legal entity in which the **Contractor** holds a ten (10%) percent or greater ownership interest in the **Contractor** either:

69.2.1 Have no business operations in Northern Ireland, or

69.2.2 Shall take lawful steps in good faith to conduct any business operations they have in Northern Ireland in accordance with the MacBride Principles, and shall permit independent monitoring of their compliance with such principles.

69.3 For purposes of this Article, the following terms shall have the following meanings:

69.3.1 "MacBride Principles" shall mean those principles relating to nondiscrimination in employment and freedom of work-place opportunity which require employers doing business in Northern Ireland to:

69.3.1(a) increase the representation of individuals from under-represented religious groups in the workforce, including managerial, supervisory, administrative, clerical and technical jobs;

69.3.1(b) take steps to promote adequate security for the protection of employees from under-represented religious groups both at the work-place and while traveling to and from **Work**;

69.3.1(c) ban provocative religious or political emblems from the workplace;

69.3.1(d) publicly advertise all job openings and make special recruitment efforts to attract applicants from under-represented religious groups;

69.3.1(e) establish layoff, recall, and termination procedures which do not in practice favor a particular religious group;

69.3.1(f) abolish all job reservations, apprenticeship restrictions and different employment criteria which discriminate on the basis of religion;

69.3.1(g) develop training programs that will prepare substantial numbers of current employees from under-represented religious groups for skilled jobs, including the expansion of existing programs and the creation of new programs to train, upgrade, and improve the skills of workers from under-represented religious groups;

69.3.1(h) establish procedures to asses, identify, and actively recruit employees from under-represented religious groups with potential for further advancement; and

69.3.1(i) appoint a senior management staff member to oversee affirmative action efforts and develop a timetable to ensure their full implementation.

69.4 The **Contractor** agrees that the covenants and representations in Article 69.2 are material conditions to this **Contract**. In the event the **Agency** receives information that the **Contractor** who made the stipulation required by this Article 69 is in violation thereof, the **Agency** shall review such information and give the **Contractor** an opportunity to respond. If the **Agency** finds that a violation has occurred, the **Agency** shall have the right to declare the **Contractor** in default in default and/or terminate this **Contract** for cause and procure supplies, services or **Work** from another source in the manner the **Agency** deems proper. In the event of such termination, the **Contractor** shall pay to the **Agency**, or the **Agency** in its sole discretion may withhold from any amounts otherwise payable to the **Contractor**, the difference between the **Contract** price for the uncompleted portion of this **Contract** and the cost to the **Agency** of completing performance of this **Contract** either itself or by engaging another **Contractor** or **Contractors**. In the case of a requirement **Contract**, the **Contractor** shall be liable for such difference in price for the entire amount of supplies required by the **Agency** for the uncompleted term of **Contractor's Contract**. In the case of a construction **Contract**, the **Agency** shall also have the right to hold the **Contractor** in partial or total default in accordance with the default provisions of this **Contract**, and/or may seek debarment or suspension of the **Contractor**. The rights and remedies of the **Agency** hereunder shall be in addition to, and not in lieu of, any rights and remedies the **Agency** has pursuant to this **Contract** or by operation of **Law**.

ARTICLE 70. ELECTRONIC FILING/NYC DEVELOPMENT HUB

70.1 The **Contractor** shall electronically file all alteration type-2 and alteration type-3 applications via the New York City Development Hub Web site, except applications for the following types of minor alterations: enlargements, curb cuts, legalizations, fire alarms, builders pavement plans, and jobs filed on Landmark Preservation Commission calendared properties. All such filings must be professionally certified. Information about electronic filing via the New York City Development Hub is available on the **City** Department of Buildings Web site at www.nyc.gov/buildings.

ARTICLE 71. PROHIBITION OF TROPICAL HARDWOODS

71.1 Tropical hardwoods, as defined in Section 165 of the New York State Finance Law (Finance Law), shall not be utilized in the performance of this **Contract** except as expressly permitted by Section 165 of the Finance Law.

ARTICLE 72. CONFLICTS OF INTEREST

72.1 Section 2604 of the **City** Charter and other related provisions of the **City** Charter, the Administrative Code, and the Penal Law are applicable under the terms of this **Contract** in relation to conflicts of interest and shall be extended to **Subcontractors** authorized to perform **Work**, labor and services pursuant to this **Contract** and further, it shall be the duty and responsibility of the **Contractor** to so inform its respective **Subcontractors**. Notice is hereby given that, under certain circumstances, penalties may be invoked against the donor as well as the recipient of any form of valuable gift.

ARTICLE 73. MERGER CLAUSE

73.1 The written **Contract** herein, contains all the terms and conditions agreed upon by the parties hereto, and no other agreement, oral or otherwise, regarding the subject matter of this **Contract** shall be deemed to exist or to bind any of the parties hereto, or to vary any of the terms contained herein.

ARTICLE 74. STATEMENT OF WORK

74.1 The **Contractor** shall furnish all labor and materials and perform all **Work** in strict accordance with the **Specifications** and **Addenda** thereto, numbered _____.

ARTICLE 75. COMPENSATION TO BE PAID TO CONTRACTOR

75.1 The **City** will pay and the **Contractor** will accept in full consideration for the performance of the **Contract**, subject to additions and deductions as provided herein, the total sum of: _____ Dollars, ($_____), this said sum being the amount at which the **Contract** was awarded to the **Contractor** at a public letting thereof, based upon the **Contractor's** bid for the **Contract**.

ARTICLE 76. ELECTRONIC FUNDS TRANSFER

76.1 In accordance with Section 6-107.1 of the Administrative Code, the **Contractor** agrees to accept payments under this **Contract** from the **City** by electronic funds transfer (EFT). An EFT is any transfer of funds, other than a transaction originated by check, draft or similar paper instrument, which is initiated through an electronic terminal, telephonic instrument or computer or magnetic tape so as to order, instruct or authorize a financial institution to debit or credit an account. Prior to the first payment made under this **Contract**, the **Contractor** shall designate one financial institution or other authorized payment agent and shall complete the attached "EFT Vendor Payment Enrollment Form" in order to provide the Commissioner of the **City** Department of Finance with information necessary for the **Contractor** to receive electronic funds transfer payments through a designated financial institution or authorized payment agent. The crediting of the amount of a payment to the appropriate account on the books of a financial institution or other authorized payment agent designated by the **Contractor** shall constitute full satisfaction by the **City** for the amount of the payment under this **Contract**. The account information supplied by the **Contractor** to facilitate the electronic funds transfer shall remain confidential to the fullest extent provided by **Law**.

76.2 The **Commissioner** may waive the application of the requirements of this Article 76 to payments on contracts entered into pursuant to Section 315 of the **City** Charter. In addition, the Commissioner of the Department of Finance and the Comptroller may jointly issue standards pursuant to

which the **Agency** may waive the requirements of this Article 76 for payment in the following circumstances: (i) for individuals or classes of individuals for whom compliance imposes a hardship; (ii) for classifications or types of checks; or (iii) in other circumstances as may be necessary in the interest of the **City**.

ARTICLE 77. RECORDS RETENTION

77.1 The **Contractor** agrees to retain all books, records, and other documents relevant to this **Contract** for six years after the final payment or termination of this **Contract**, whichever is later. **City**, state, and federal auditors and any other persons duly authorized by the **City** shall have full access to and the right to examine any such books, records, and other documents during the retention period.

ARTICLE 78. PARTICIPATION BY MINORITY-OWNED AND WOMEN-OWNED BUSINESS ENTERPRISES IN CITY PROCUREMENT

NOTICE TO ALL PROSPECTIVE CONTRACTORS

ARTICLE I. M/WBE PROGRAM

Local Law No. 129 of 2005 added and Local Law 1 of 2013 amended Section 6-129 of the Administrative Code of the City of New York (hereinafter "Section 6-129"). Section 6-129 establishes the program for participation in City procurement ("M/WBE Program") by minority- owned business enterprises ("MBEs") and women-owned business enterprises ("WBEs"), certified in accordance with Section 1304 of the New York City Charter. As stated in Section 6-129, the intent of the program is to address the impact of discrimination on the City's procurement process, and to promote the public interest in avoiding fraud and favoritism in the procurement process, increasing competition for City business, and lowering contract costs. The contract provisions contained herein are pursuant to Section 6-129, and the rules of the Department of Small Business Services ("DSBS") promulgated thereunder.

If this Contract is subject to the M/WBE Program established by Section 6-129, the specific requirements of MBE and/or WBE participation for this Contract are set forth in Schedule B of the Contract (entitled the "M/WBE Utilization Plan"), and are detailed below. The Contractor must comply with all applicable MBE and WBE requirements for this Contract.

All provisions of Section 6-129 are hereby incorporated in the Contract by reference and all terms used herein that are not defined herein shall have the meanings given such terms in Section 6-129. Article I, Part A, below, sets forth provisions related to the participation goals for construction, standard and professional services contracts. Article I, Part B, below, sets forth miscellaneous provisions related to the M/WBE Program.

PART A

PARTICIPATION GOALS FOR CONSTRUCTION, STANDARD AND PROFESSIONAL SERVICES CONTRACTS OR TASK ORDERS

1. The **MBE and/or WBE Participation Goals** established for this Contract or Task Orders issued pursuant to this Contract, ("**Participation Goals**"), as applicable, are set forth on Schedule B, Part I to this Contract (see Page 1, line 1 Total Participation Goals) or will be set forth on Schedule B, Part I to Task Orders issued pursuant to this Contract, as applicable.

The **Participation Goals** represent a percentage of the total dollar value of the Contract or Task Order, as applicable, that may be achieved by awarding subcontracts to firms certified with New York City Department of Small Business Services as MBEs and/or WBEs, and/or by crediting the participation of prime contractors and/or qualified joint ventures as provided in Section 3 below, unless the goals have been waived or modified by Agency in accordance with Section 6-129 and Part A, Sections 10 and 11 below, respectively.

2. If **Participation Goals** have been established for this Contract or Task Orders issued pursuant to this Contract, Contractor agrees or shall agree as a material term of the Contract that Contractor shall be subject to the **Participation Goals**, unless the goals are waived or modified by Agency in accordance with Section 6-129 and Part A, Sections 10 and 11 below, respectively.

3. If **Participation Goals** have been established for this Contract or Task Order issued pursuant to this Contract, a Contractor that is an MBE and/or WBE shall be permitted to count its own participation toward fulfillment of the relevant **Participation Goal**, provided that in accordance with Section 6-129 the value of Contractor's participation shall be determined by subtracting from the total value of the Contract or Task Order, as applicable, any amounts that the Contractor pays to direct subcontractors (as defined in Section 6-129(c)(13)), and provided further that a Contractor that is certified as both an MBE and a WBE may count its own participation either toward the goal for MBEs or the goal for WBEs, but not both.

A Contractor that is a qualified joint venture (as defined in Section 6-129(c)(30)) shall be permitted to count a percentage of its own participation toward fulfillment of the relevant **Participation Goal**. In accordance with Section 6-129, the value of Contractor's participation shall be determined by subtracting from the total value of the Contract or Task Order, as applicable, any amounts that Contractor pays to direct subcontractors, and then multiplying the remainder by the percentage to be applied to total profit to determine the amount to which an MBE or WBE is entitled pursuant to the joint venture agreement, provided that where a participant in a joint venture is certified as both an MBE and a WBE, such amount shall be counted either toward the goal for MBEs or the goal for WBEs, but not both.

4. A. If **Participation Goals** have been established for this Contract, a prospective contractor shall be required to submit with its bid or proposal, as applicable, a completed Schedule B, M/WBE Utilization Plan, Part II (see Pages 2-4) indicating: (a) whether the contractor is an MBE or WBE, or qualified joint venture; (b) the percentage of work it intends to award to direct subcontractors; and (c) in cases where the contractor intends to award direct subcontracts, a description of the type and dollar value of work designated for participation by MBEs and/or WBEs, and the time frames in which such work is scheduled to begin and end. In the event that this M/WBE Utilization Plan indicates that the bidder or proposer, as applicable, does not intend to meet the **Participation Goals**, the bid or proposal, as applicable, shall be deemed non-responsive, unless Agency has granted the bidder or proposer, as applicable, a pre- award waiver of the Participation Goals in accordance with Section 6-129 and Part A, Section 10 below.

B. (i) If this Contract is for a master services agreement or other requirements type contract that will result in the issuance of Task Orders that will be individually registered ("Master Services Agreement") and is subject to M/WBE **Participation Goals**, a prospective contractor shall be required to submit with its bid or proposal, as applicable, a completed Schedule B, M/WBE Participation Requirements for Master Services Agreements That Will Require Individually Registered Task Orders, Part II (page 2) indicating the prospective contractor's certification and required affirmations to make all reasonable good faith efforts to meet participation goals established on each individual Task Order issued pursuant to this Contract, or if a partial waiver is obtained or such goals are modified by the Agency, to meet the modified **Participation Goals** by soliciting and obtaining the participation of certified MBE and/or WBE firms. In the event that the Schedule B indicates that the bidder or proposer, as applicable, does not intend to meet the **Participation Goals** that may be established on Task Orders issued pursuant to this Contract, the bid or proposal, as applicable, shall be deemed nonresponsive.

(ii) **Participation Goals** on a Master Services Agreement will be established for individual Task Orders issued after the Master Services Agreement is awarded. If **Participation Goals** have been established on a Task Order, a contractor shall be required to submit a Schedule B – M/WBE Utilization Plan For Independently Registered Task Orders That Are Issued Pursuant to Master Services Agreements, Part II (see Pages 2-4) indicating: (a) whether the contractor is an MBE or WBE, or qualified joint venture; (b) the percentage of work it intends to award to direct subcontractors; and (c) in cases where the contractor intends to award direct subcontracts, a description of the type and dollar value of work designated for participation by MBEs and/or WBEs, and the time frames in which such work is scheduled to begin and end. The contractor must engage in good faith efforts to meet the **Participation Goals** as established for the Task Order unless Agency has granted the contractor a pre-award waiver of the Participation Goals in accordance with Section 6-129 and Part A, Section 10 below.

C. THE BIDDER/PROPOSER MUST COMPLETE THE SCHEDULE B INCLUDED HEREIN (SCHEDULE B, PART II). A SCHEDULE B SUBMITTED BY THE BIDDER/PROPOSER WHICH DOES NOT INCLUDE THE VENDOR CERTIFICATION AND REQUIRED AFFIRMATIONS (SEE SECTION V OF PART II) WILL BE DEEMED TO BE NON-RESPONSIVE, UNLESS A FULL WAIVER OF THE PARTICIPATION GOALS IS GRANTED (SCHEDULE B, PART III). IN THE EVENT THAT THE CITY DETERMINES THAT THE BIDDER/PROPOSER HAS SUBMITTED A SCHEDULE B WHERE THE VENDOR CERTIFICATION AND REQUIRED AFFIRMATIONS ARE COMPLETED BUT OTHER ASPECTS OF THE SCHEDULE B ARE NOT COMPLETE, OR CONTAIN A COPY OR COMPUTATION ERROR THAT IS AT ODDS WITH THE VENDOR CERTIFICATION AND AFFIRMATIONS, THE BIDDER/PROPOSER WILL BE NOTIFIED BY THE AGENCY AND WILL BE GIVEN FOUR (4) CALENDAR DAYS FROM RECEIPT OF NOTIFICATION TO CURE THE SPECIFIED DEFICIENCIES AND RETURN A COMPLETED SCHEDULE B TO THE AGENCY. FAILURE TO DO SO WILL RESULT IN A DETERMINATION THAT THE BID/PROPOSAL IS NON-RESPONSIVE. RECEIPT OF NOTIFICATION IS DEFINED AS THE DATE NOTICE IS E-MAILED OR FAXED (IF THE BIDDER/PROPOSER HAS PROVIDED AN E-MAIL ADDRESS OR FAX NUMBER), OR NO LATER THAN FIVE (5) CALENDAR DAYS FROM THE DATE OF MAILING OR UPON DELIVERY, IF DELIVERED.

5. Where an **M/WBE** Utilization Plan has been submitted, the Contractor shall, within 30 days of issuance by Agency of a notice to proceed, submit a list of proposed persons or entities to which it intends to award subcontracts within the subsequent 12 months. In the case of multiyear contracts, such list shall also be submitted every year thereafter. The Agency may also require the Contractor to report periodically about the contracts awarded by its direct subcontractors to indirect subcontractors (as defined in Section 6-129(c)(22)). **PLEASE NOTE: If this Contract is a public works project subject to GML §101(5) (i.e., a contract valued at or below $3M for projects in New York City) or if the Contract is subject to a project labor agreement in accordance with Labor Law §222, and the bidder is required to identify at the time of bid submission its intended subcontractors for the Wicks trades (plumbing and gas fitting; steam heating, hot water heating, ventilating and air conditioning (HVAC); and electric wiring), the Contractor must identify all those to which it intends to award construction subcontracts for any portion of the Wicks trade work at the time of bid submission, regardless of what point in the life of the contract such subcontracts will occur. In identifying intended subcontractors in the bid submission, bidders may satisfy any Participation Goals established for this Contract by proposing one or more subcontractors that are MBEs and/or WBEs for any portion of the Wicks trade work.** In the event that the Contractor's selection of a subcontractor is disapproved, the Contractor shall have a reasonable time to propose alternate subcontractors.

6. MBE and WBE firms must be certified by DSBS in order for the Contractor to credit such firms' participation toward the attainment of the **Participation Goals**. Such certification must occur prior to the

firms' commencement of work. A list of MBE and WBE firms may be obtained from the DSBS website at www.nyc.gov/buycertified, by emailing DSBS at buyer@sbs.nyc.gov, by calling (212) 513-6356, or by visiting or writing DSBS at 110 William St., New York, New York, 10038, 7th floor. Eligible firms that have not yet been certified may contact DSBS in order to seek certification by visiting www.nyc.gov/getcertified, emailing MWBE@sbs.nyc.gov, or calling the DSBS certification helpline at (212) 513-6311. A firm that is certified as both an MBE and a WBE may be counted either toward the goal for MBEs or the goal for WBEs, but not both. No credit shall be given for participation by a graduate MBE or graduate WBE, as defined in Section 6-129(c)(20).

7. Where an **M/WBE** Utilization Plan has been submitted, the Contractor shall, with each voucher for payment, and/or periodically as Agency may require, submit statements, certified under penalty of perjury, which shall include, but not be limited to,: the total amount the Contractor paid to its direct subcontractors, and, where applicable pursuant to Section 6-129(j), the total amount direct subcontractors paid to indirect subcontractors; the names, addresses and contact numbers of each MBE or WBE hired as a subcontractor by the Contractor, and, where applicable, hired by any of the Contractor's direct subcontractors; and the dates and amounts paid to each MBE or WBE. The Contractor shall also submit, along with its voucher for final payment: the total amount it paid to subcontractors, and, where applicable pursuant to Section 6-129(j), the total amount its direct subcontractors paid directly to their indirect subcontractors; and a final list, certified under penalty of perjury, which shall include the name, address and contact information of each subcontractor that is an MBE or WBE, the work performed by, and the dates and amounts paid to each.

8. If payments made to, or work performed by, MBEs or WBEs are less than the amount specified in the Contractor's **M/WBE** Utilization Plan, Agency shall take appropriate action, in accordance with Section 6-129 and Article II below, unless the Contractor has obtained a modification of its **M/WBE** Utilization Plan in accordance with Section 6-129 and Part A, Section 11 below.

9. Where an **M/WBE** Utilization Plan has been submitted, and the Contractor requests a change order the value of which exceeds the greater of 10 percent of the Contract or Task Order, as applicable, or $500,000, Agency shall review the scope of work for the Contract or Task Order, as applicable, and the scale and types of work involved in the change order, and determine whether the **Participation Goals** should be modified.

10. Pre-award waiver of the **Participation Goals**. (a) A bidder or proposer, or contractor with respect to a Task Order, may seek a pre-award full or partial waiver of the **Participation Goals** in accordance with Section 6-129, which requests that Agency change one or more **Participation Goals** on the grounds that the **Participation Goals** are unreasonable in light of the availability of certified firms to perform the services required, or by demonstrating that it has legitimate business reasons for proposing a lower level of subcontracting in its M/WBE Utilization Plan.

(b) To apply for a full or partial waiver of the **Participation Goals**, a bidder, proposer, or contractor, as applicable, must complete Part III (Page 5) of Schedule B and submit such request no later than seven (7) calendar days prior to the date and time the bids, proposals, or Task Orders are due, in writing to the Agency by email at poped@ddc.nyc.gov or via facsimile at (718) 391-1886. Bidders, proposers, or contractors, as applicable, who have submitted requests will receive an Agency response by no later than two (2) calendar days prior to the due date for bids, proposals, or Task Orders; provided, however, that if that date would fall on a weekend or holiday, an Agency response will be provided by close-of-business on the business day before such weekend or holiday date.

(c) If the Agency determines that the **Participation Goals** are unreasonable in light of the availability of certified firms to perform the services required, it shall revise the solicitation and extend the deadline for bids and proposals, or revise the Task Order, as applicable.

(d) Agency may grant a full or partial waiver of the **Participation Goals** to a bidder, proposer or contractor, as applicable, who demonstrates—before submission of the bid, proposal or Task Order, as applicable—that it has legitimate business reasons for proposing the level of subcontracting in its **M/WBE** Utilization Plan. In making its determination, Agency shall consider factors that shall include, but not be limited to, whether the bidder, proposer or contractor, as applicable, has the capacity and the bona fide intention to perform the Contract without any subcontracting, or to perform the Contract without awarding the amount of subcontracts represented by the **Participation Goals**. In making such determination, Agency may consider whether the **M/WBE** Utilization Plan is consistent with past subcontracting practices of the bidder, proposer or contractor, as applicable, whether the bidder, proposer or contractor, as applicable, has made efforts to form a joint venture with a certified firm, and whether the bidder, proposer, or contractor, as applicable, has made good faith efforts to identify other portions of the Contract that it intends to subcontract.

11. Modification of **M/WBE** Utilization Plan. (a) A Contractor may request a modification of its **M/WBE** Utilization Plan after award of this Contract. **PLEASE NOTE: If this Contract is a public works project subject to GML §101(5) (i.e., a contract valued at or below $3M for projects in New York City) or if the Contract is subject to a project labor agreement in accordance with Labor Law §222, and the bidder is required to identify at the time of bid submission its intended subcontractors for the Wicks trades (plumbing and gas fitting; steam heating, hot water heating, ventilating and air conditioning (HVAC); and electric wiring), the Contractor may request a Modification of its M/WBE Utilization Plan as part of its bid submission.** The Agency may grant a request for Modification of a Contractor's **M/WBE** Utilization Plan if it determines that the Contractor has established, with appropriate documentary and other evidence, that it made reasonable, good faith efforts to meet the **Participation Goals.** In making such determination, Agency shall consider evidence of the following efforts, as applicable, along with any other relevant factors:

(i) The Contractor advertised opportunities to participate in the Contract, where appropriate, in general circulation media, trade and professional association publications and small business media, and publications of minority and women's business organizations;
(ii) The Contractor provided notice of specific opportunities to participate in the Contract, in a timely manner, to minority and women's business organizations;
(iii) The Contractor sent written notices, by certified mail or facsimile, in a timely manner, to advise MBEs or WBEs that their interest in the Contract was solicited;
(iv) The Contractor made efforts to identify portions of the work that could be substituted for portions originally designated for participation by MBEs and/or WBEs in the M/WBE Utilization Plan, and for which the Contractor claims an inability to retain MBEs or WBEs;
(v) The Contractor held meetings with MBEs and/or WBEs prior to the date their bids or proposals were due, for the purpose of explaining in detail the scope and requirements of the work for which their bids or proposals were solicited;
(vi) The Contractor made efforts to negotiate with MBEs and/or WBEs as relevant to perform specific subcontracts, or act as suppliers or service providers;
(vii) Timely written requests for assistance made by the Contractor to Agency's M/WBE liaison officer and to DSBS;
(viii) Description of how recommendations made by DSBS and Agency were acted upon and an explanation of why action upon such recommendations did not lead to the desired level of participation of MBEs and/or WBEs.

Agency's M/WBE officer shall provide written notice to the Contractor of the determination.

(b) The Agency may modify the **Participation Goals** when the scope of the work has been changed by the Agency in a manner that affects the scale and types of work that the Contractor indicated in its **M/WBE** Utilization Plan would be awarded to subcontractors.

12. If this Contract is for an indefinite quantity of construction, standard or professional services or is a requirements type contract and the Contractor has submitted an **M/WBE** Utilization Plan and has committed to subcontract work to MBEs and/or WBEs in order to meet the **Participation Goals**, the Contractor will not be deemed in violation of the M/WBE Program requirements for this Contract with regard to any work which was intended to be subcontracted to an MBE and/or WBE to the extent that the Agency has determined that such work is not needed.

13. If **Participation Goals** have been established for this Contract or a Task Order issued pursuant to this Contract, at least once annually during the term of the Contract or Task Order, as applicable, Agency shall review the Contractor's progress toward attainment of its M/WBE Utilization Plan, including but not limited to, by reviewing the percentage of work the Contractor has actually awarded to MBE and/or WBE subcontractors and the payments the Contractor made to such subcontractors.

14. If **Participation Goals** have been established for this Contract or a Task Order issued pursuant to this Contract, Agency shall evaluate and assess the Contractor's performance in meeting those goals, and such evaluation and assessment shall become part of the Contractor's overall contract performance evaluation.

PART B: MISCELLANEOUS

1. The Contractor shall take notice that, if this solicitation requires the establishment of an **M/WBE** Utilization Plan, the resulting contract may be audited by DSBS to determine compliance with Section 6-129. See §6-129(e)(10). Furthermore, such resulting contract may also be examined by the City's Comptroller to assess compliance with the **M/WBE** Utilization Plan.

2. Pursuant to DSBS rules, construction contracts that include a requirement for an **M/WBE** Utilization Plan shall not be subject to the law governing Locally Based Enterprises set forth in Section 6-108.1 of the Administrative Code of the City of New York.

3. DSBS is available to assist contractors and potential contractors in determining the availability of MBEs and/or WBEs to participate as subcontractors, and in identifying opportunities that are appropriate for participation by MBEs and/or WBEs in contracts.

4. Prospective contractors are encouraged to enter into qualified joint venture agreements with MBEs and/or WBEs as defined by Section 6-129(c)(30).

5. By submitting a bid or proposal the Contractor hereby acknowledges its understanding of the M/WBE Program requirements set forth herein and the pertinent provisions of Section 6-129, and any rules promulgated thereunder, and if awarded this Contract, the Contractor hereby agrees to comply with the M/WBE Program requirements of this Contract and pertinent provisions of Section 6-129, and any rules promulgated thereunder, all of which shall be deemed to be material terms of this Contract. The Contractor hereby agrees to make all reasonable, good faith efforts to solicit and obtain the participation of MBEs and/or WBEs to meet the required **Participation Goals**.

ARTICLE II. ENFORCEMENT

1. If Agency determines that a bidder or proposer, as applicable, has, in relation to this procurement, violated Section 6-129 or the DSBS rules promulgated pursuant to Section 6-129, Agency may disqualify such bidder or proposer, as applicable, from competing for this Contract and the Agency may revoke such bidder's or proposer's prequalification status, if applicable.

2. Whenever Agency believes that the Contractor or a subcontractor is not in compliance with Section 6-129 or the DSBS rules promulgated pursuant to Section 6-129, or any provision of this Contract that implements Section 6-129, including, but not limited to any **M/WBE** Utilization Plan, Agency shall send a written notice to the Contractor describing the alleged noncompliance and offering the Contractor an opportunity to be heard. Agency shall then conduct an investigation to determine whether such Contractor or subcontractor is in compliance.

3. In the event that the Contractor has been found to have violated Section 6-129, the DSBS rules promulgated pursuant to Section 6-129, or any provision of this Contract that implements Section 6-129, including, but not limited to, any **M/WBE** Utilization Plan, Agency may determine that one of the following actions should be taken:

(a) entering into an agreement with the Contractor allowing the Contractor to cure the violation;
(b) revoking the Contractor's pre-qualification to bid or make proposals for future contracts;
(c) making a finding that the Contractor is in default of the Contract;
(d) terminating the Contract;
(e) declaring the Contractor to be in breach of Contract;
(f) withholding payment or reimbursement;
(g) determining not to renew the Contract;
(h) assessing actual and consequential damages;
(i) assessing liquidated damages or reducing fees, provided that liquidated damages may be based on amounts representing costs of delays in carrying out the purposes of the M/WBE Program, or in meeting the purposes of the Contract, the costs of meeting utilization goals through additional procurements, the administrative costs of investigation and enforcement, or other factors set forth in the Contract;
(j) exercising rights under the Contract to procure goods, services or construction from another contractor and charge the cost of such contract to the Contractor that has been found to be in noncompliance; or
(k) taking any other appropriate remedy.

4. If an **M/WBE** Utilization Plan has been submitted, and pursuant to this Article II, Section 3, the Contractor has been found to have failed to fulfill its **Participation Goals** contained in its **M/WBE** Utilization Plan or the **Participation Goals** as modified by Agency pursuant to Article I, Part A, Section 11, Agency may assess liquidated damages in the amount of ten percent (10%) of the difference between the dollar amount of work required to be awarded to MBE and/or WBE firms to meet the **Participation Goals** and the dollar amount the Contractor actually awarded and paid, and/or credited, to MBE and/or WBE firms. In view of the difficulty of accurately ascertaining the loss which the City will suffer by reason of Contractor's failure to meet the **Participation Goals**, the foregoing amount is hereby fixed and agreed as the liquidated damages that the City will suffer by reason of such failure, and not as a penalty. Agency may deduct and retain out of any monies which may become due under this Contract the amount of any such liquidated damages; and in case the amount which may become due under this Contract shall be less than the amount of liquidated damages suffered by the City, the Contractor shall be liable to pay the difference.

5. Whenever Agency has reason to believe that an MBE and/or WBE is not qualified for certification, or is participating in a contract in a manner that does not serve a commercially useful function (as defined in Section 6-129(c)(8)), or has violated any provision of Section 6- 129, Agency shall notify the Commissioner of DSBS who shall determine whether the certification of such business enterprise should be revoked.

6. Statements made in any instrument submitted to Agency pursuant to Section 6-129 shall be submitted under penalty of perjury and any false or misleading statement or omission shall be grounds for the application of any applicable criminal and/or civil penalties for perjury. The making of a false or fraudulent statement by an MBE and/or WBE in any instrument submitted pursuant to Section 6-129 shall, in addition, be grounds for revocation of its certification.

7. The Contractor's record in implementing its **M/WBE** Utilization Plan shall be a factor in the evaluation of its performance. Whenever Agency determines that a Contractor's compliance with an **M/WBE** Utilization Plan has been unsatisfactory, Agency shall, after consultation with the City Chief Procurement Officer, file an advice of caution form for inclusion in VENDEX as caution data.

IN WITNESS WHEREOF, the Commissioner, on behalf of the City of New York, and the Contractor, have executed this agreement in quadruplicate, two parts of which are to remain with the Commissioner, another to be filed with the Comptroller of the City, and the fourth to be delivered to the Contractor.

THE CITY OF NEW YORK

By: _____
Deputy Commissioner

CONTRACTOR: Triumph Construction Corp.

By: _____
(Member of Firm or Officer of Corporation)

Title: Pres

(Where Contractor is a Corporation, add):
Attest:

_____
Secretary

(Seal)

_____

ACKNOWLEDGEMENT OF PRINCIPAL, IF A CORPORATION

State of New York County of Westchester ss:

On this 8 day of Jan, 2016, before me personally came Carlo Cini to me known who, being by me duly sworn did depose and say that he resides at 45 Winchester Oval New Rochelle NY 10805 that he is the OWNER of the corporation described in and which executed the foregoing instrument; that he knows the seal of said corporation; that one of the seals affixed to said instrument is such seal; that it was so affixed by order of the directors of said corporation, and that he signed his name thereto by like order.

VICTORIA AYO-VAUGHAN
Notary Public, State of New York
Registration #01AY5014042
Qualified in Queens County
Commission Expires July 15, 2019

Notary Public or Commissioner of Deeds

ACKNOWLEDGEMENT OF PRINCIPAL, IF A PARTNERSHIP

State of _____ County of _____ ss:

On this _____ day of _____, _____, before me personally appeared _____ to me known, and known to me to be one of the members of the firm of _____ _____ described in and who executed the foregoing instrument; and he acknowledged to me that he executed the same as and for the act and deed of said firm.

_____
Notary Public or Commissioner of Deeds

ACKNOWLEDGEMENT OF PRINCIPAL, IF AN INDIVIDUAL

State of _____ County of _____ ss:

On this _____ day of _____, _____, before me personally appeared _____ to me known, and known to me to be the person described in and who executed the foregoing instrument; and acknowledged that he executed the same.

_____
Notary Public or Commissioner of Deeds

ACKNOWLEDGEMENT BY COMMISSIONER

State of New York County of Queens ss:

On this 12 day of Jan, 2015, before me personally came Eric MacFarlane to me known, and known to be the Deputy Commissioner of the Department of Design and Construction of The City of New York, the person described as such in and who as such executed the foregoing instrument and acknowledged to me that he executed the same as Deputy Commissioner for the purposes therein mentioned.

Notary Public or Commissioner of Deeds

VICTORIA AYO-VAUGHAN
Notary Public, State of New York
Registration #01AY5014042
Qualified in Queens County
Commission Expires July 15, 2019

AUTHORITY

MAYOR'S CERTIFICATE NO. CBX DATED
BUDGET DIRECTOR'S CERTIFICATE NO. DATED

APPROPRIATION
COMMISSIONER'S CERTIFICATE

In conformity with the provisions of Section 6-101 of the Administrative Code of the City of New York, it is hereby certified that the estimated cost of the work, materials and supplies required by the within Contract, amounting to

Ten million, Five Hundred Fifty six, One Hundred ninety nine and Sixty Four cents 64/100. Dollars ($ 10,556,199.64)

is chargeable to the fund of the Department of Design and Construction entitled Code

HWMM008

Department of Design and Construction

I hereby certify that the specifications contained herein comply with the terms and conditions of the BUDGET.

Deputy Commissioner

COMPTROLLER'S CERTIFICATE

The City of New York

Pursuant to the provisions of Section 6-101 of the Administrative Code of the City of New York, I hereby certify that there remains unapplied and unexpended a balance of the above mentioned fund applicable to this Contract sufficient to pay the estimated expense of executing the same viz:

$

Comptroller

MAYOR'S CERTIFICATE OR CERTIFICATE OF THE DIRECTOR OF THE BUDGET

Performance Bond #1 (Pages 92 to 95): Use if the total contract price is $5 Million Or Less. Performance Bond #1 has been approved by the U.S. Small Business Administration ("SBA") for participation in its Bond Guarantee Program.

PERFORMANCE BOND #1

KNOW ALL PERSONS BY THESE PRESENTS:,
That we, _____

_____

_____

hereinafter referred to as the "Principal,"
and, _____

_____

_____

hereinafter referred to as the "Surety" ("Sureties") are held and firmly bound to THE CITY OF NEW YORK, hereinafter referred to as the "City" or to its successors and assigns in the penal sum
of _____

_____

_____

($_____) Dollars, lawful money of the United States for the payment of which said sum of money well and truly to be made, we, and each of us, bind ourselves, our heirs, executors, administrators, successors and assigns, jointly and severally, firmly by these presents.

WHEREAS, the Principal is about to enter, or has entered, into a Contract in writing with the City for

_____

_____

a copy of which Contract is annexed to and hereby made a part of this bond as though herein set forth in full;

NOW, THEREFORE, the conditions of this obligation are such that if the Principal, his or its representatives or assigns, shall well and faithfully perform the said Contract and all modifications, amendments, additions and alterations thereto that may hereafter be made, according to its terms and its true intent and meaning, including repair and or replacement of defective work and guarantees of maintenance for the periods stated in the Contract, and shall fully indemnify and save harmless the City from all cost and damage which it may suffer by reason of the Principal's default of the Contract, and shall fully reimburse and repay the City for all outlay and expense which the City may incur in making

<u>Performance Bond #1 (Pages 92 to 95)</u>: Use if the total contract price is $5 Million Or Less. Performance Bond #1 has been approved by the U.S. Small Business Administration ("SBA") for participation in its Bond Guarantee Program.

good any such default and shall protect the said City of New York against, and pay any and all amounts, damages, cost and judgments which may or shall be recovered against said City or its officers or agents or which the said City of New York may be called upon to pay any person or corporation by reason of any damages arising or growing out of the Principal's default of the Contract, then this obligation shall be null and void, otherwise to remain in full force and effect.

The Surety (Sureties), for value received, hereby stipulates and agrees, upon written notice from the City that the City has determined that the Principal is in default of the Contract, to (1) pay the City the cost to complete the contract as determined by the City in excess of the balance of the Contract held by the City, plus any damages or costs to which the City is entitled, up to the full amount of the above penal sum, (2) fully perform and complete the Work to be performed under the Contract, pursuant to the terms, conditions, and covenants thereof, or (3) tender a completion Contractor that is acceptable to the City. The Surety (Sureties) further agrees, at its option, either to notify the City that it elects to pay the city the cost of completion plus any applicable damages and costs under option (1) above, or to commence and diligently perform the Work specified in the Contract, including physical site work, within twenty-five (25) business days after written notice thereof from the City and, if the Surety elects to fully perform and complete the Work, then to complete all Work within the time set forth in the Contract or such other time as agreed to between the City and Surety in accordance with the Contract. If the Surety elects to tender payment pursuant to (1) above, then the Surety shall tender such amount within fifteen (15) business days notification from the City of the cost of completion. The Surety and the City reserve all rights and defenses each may have against the other; provided, however, that the Surety expressly agrees that its reservation of rights shall not provide a basis for non-performance of its obligation to pay the City the cost of completion, to commence and complete all Work as provided herein, or to tender a completion contractor.

The Surety (Sureties), for value received, for itself and its successors and assigns, hereby stipulates and agrees that the obligation of said Surety (Sureties) and its bond shall be in no way impaired or affected by any extension of time, modification, omission, addition, or change in or to the said Contract or the Work to be performed thereunder, or by any payment thereunder before the time required therein, or by any waiver of any provisions thereof, or any moneys due or to become due thereunder; and said Surety (Sureties) does hereby waive notice of any and all of such extensions, modifications, omissions, additions, changes, payments, and waivers, and hereby expressly stipulates and agrees that any and all things done and omitted to be done by and in relation to subcontractors shall have the same effect as to said Surety (Sureties) as though done or omitted to be done by or in relation to said Principal. Notwithstanding the above, if the City makes payments to the Principal before the time required by the contract that in the aggregate exceed $100,000 or 10% of the Contract price, whichever is less, and that have not become earned prior to the Principal being found to be in default, then all payments made to the Principal before the time required by the Contract shall be added to the remaining contract value available to be paid for the completion of the Contract as if such sums had not been paid to the Principal, but shall not provide a basis for non-performance of its obligation to pay the City the cost of completion, to commence and to complete all Work as provided herein, or to tender a completion contractor.

Performance Bond #1 (Pages 92 to 95): Use if the total contract price is $5 Million Or Less. Performance Bond #1 has been approved by the U.S. Small Business Administration ("SBA") for participation in its Bond Guarantee Program.

IN WITNESS WHEREOF, The Principal and the Surety (Sureties) have hereunto set their hands and seals, and such of them as are corporations have caused their corporate seals to be hereunto affixed and these presents to be signed by their proper officers, this

_____ day of _____, 20_____.

(Seal)

_____(L.S.)
Principal

By:_____.

(Seal)

Surety

By:_____.
_____.

(Seal)

Surety

By:_____.
_____.

(Seal)

Surety

By:_____.
_____.

(Seal)

Surety

By:_____.

(Seal)

Surety

By:_____.

Bond Premium Rate _____.

Bond Premium Cost _____.

If the Contractor (Principal) is a partnership, the bond should be signed by each of the individuals who are partners.

If the Contractor (Principal) is a corporation, the bond should be signed in its correct corporate name by a duly authorized officer, agent, or attorney-in-fact.

There should be executed an appropriate number of counterparts of the bond corresponding to the number of counterparts of the Contract.

Performance Bond #1 (Pages 92 to 95): Use if the total contract price is $5 Million Or Less. Performance Bond #1 has been approved by the U.S. Small Business Administration ("SBA") for participation in its Bond Guarantee Program.

ACKNOWLEDGMENT OF PRINCIPAL IF A CORPORATION

State of _____ County of _____ ss:

On this _____ day of _____, 20_____ before me personally came _____,
to me known, who, being by me duly sworn did depose and say that he/she resides at _____
_____; that he/she is the _____
of the corporation described in and which executed the foregoing instrument; and that he/she signed his/her name to the foregoing instrument by order of the directors of said corporation as the duly authorized and binding act thereof.

_____
Notary Public or Commissioner of Deeds.

ACKNOWLEDGMENT OF PRINCIPAL IF A PARTNERSHIP

State of _____ County of _____ ss:

On this _____ day of _____, 20 _____ before me personally came _____,
to me known, who, being by me duly sworn did dispose and say that he/she resides at _____
_____; that he/she is _____ partner of _____, a limited/general partnership existing under the laws of the State of _____, the partnership described in and which executed the foregoing instrument; and that he/she signed his/her name to the foregoing instrument as the duly authorized and binding act of said partnership.

_____
Notary Public or Commissioner of Deeds.

ACKNOWLEDGMENT OF PRINCIPAL IF AN INDIVIDUAL

State of _____ County of _____ ss:

On this _____ day of _____, 20_____ before me personally came _____,
to me known, who,.being by me duly sworn did depose and say that he/she resides at _____
_____, and that he/she is the individual whose name is subscribed to the within instrument and acknowledged to me that by his/her signature on the instrument, said individual executed the instrument.

_____
Notary Public or Commissioner of Deeds

Each executed bond should be accompanied by: (a) appropriate acknowledgments of the respective parties; (b) appropriate duly certified copy of Power of Attorney or other certificate of authority where bond is executed by agent, officer or other representative of Principal or Surety; (c) a duly certified extract from By-Laws or resolutions of Surety under which Power of Attorney or other certificate of authority of its agent, officer or representative was issued, and (d) certified copy of latest published financial statement of assets and liabilities of Surety.

* * * * * * * *

Affix Acknowledgments and Justification of Sureties.

Performance Bond #2 (Pages 96 to 99): Use if the total contract price is more than $5 Million.

PERFORMANCE BOND #2

KNOW ALL PERSONS BY THESE PRESENTS:,
That we, _____

_____

_____

hereinafter referred to as the "Principal,"
and, _____

_____

_____

hereinafter referred to as the "Surety" ("Sureties") are held and firmly bound to THE CITY OF NEW YORK, hereinafter referred to as the "City" or to its successors and assigns in the penal sum
of _____

_____

_____

($_____) Dollars, lawful money of the United States for the payment of which said sum of money well and truly to be made, we, and each of us, bind ourselves, our heirs, executors, administrators, successors and assigns, jointly and severally, firmly by these presents.

WHEREAS, the Principal is about to enter, or has entered, into a Contract in writing with the City for

_____

_____

a copy of which Contract is annexed to and hereby made a part of this bond as though herein set forth in full;

NOW, THEREFORE, the conditions of this obligation are such that if the Principal, his or its representatives or assigns, shall well and faithfully perform the said Contract and all modifications, amendments, additions and alterations thereto that may hereafter be made, according to its terms and its true intent and meaning, including repair and or replacement of defective work and guarantees of maintenance for the periods stated in the Contract, and shall fully indemnify and save harmless the City from all cost and damage which it may suffer by reason of the Principal's default of the Contract, and shall fully reimburse and repay the City for all outlay and expense which the City may incur in making

Performance Bond #2 (Pages 96 to 99): Use if the total contract price is more than $5 Million.

PERFORMANCE BOND #2

KNOW ALL PERSONS BY THESE PRESENTS:,
That we, Triumph Construction Corp.
1354 Seneca Avenue
Bronx, NY 10474

hereinafter referred to as the "Principal,"
and, Liberty Mutual Insurance Company
1200 MacArthur Blvd., 3rd floor
Mahwah, NJ 07430

hereinafter referred to as the "Surety" ("Sureties") are held and firmly bound to THE CITY OF NEW YORK, hereinafter referred to as the "City" or to its successors and assigns in the penal sum of

Ten Million Five Hundred Fifty Six Thousand One Hundred Ninety Nine and 64/100

($ 10,556,199.64) Dollars, lawful money of the United States for the payment of which said sum of money well and truly to be made, we, and each of us, bind ourselves, our heirs, executors, administrators, successors and assigns, jointly and severally, firmly by these presents.

WHEREAS, the Principal is about to enter, or has entered, into a Contract in writing with the City for

FMS Project ID#: HWMM008 - Safety and Streetscape Improvements (E. 86th St.)/School Safety Neckdowns (Madison Avenue) - Borough of Manhattan, City of New York - PIN #8502013HW0020C

a copy of which Contract is annexed to and hereby made a part of this bond as though herein set forth in full;

NOW, THEREFORE, the conditions of this obligation are such that if the Principal, his or its representatives or assigns, shall well and faithfully perform the said Contract and all modifications, amendments, additions and alterations thereto that may hereafter be made, according to its terms and its true intent and meaning, including repair and or replacement of defective work and guarantees of maintenance for the periods stated in the Contract, and shall fully indemnify and save harmless the City from all cost and damage which it may suffer by reason of the Principal's default of the Contract, and shall fully reimburse and repay the City for all outlay and expense which the City may incur in making

Performance Bond #2 (Pages 96 to 99): Use if the total contract price is more than $5 Million.

good any such default and shall protect the said City of New York against, and pay any and all amounts, damages, cost and judgments which may or shall be recovered against said City or its officers or agents or which the said City of New York may be called upon to pay any person or corporation by reason of any damages arising or growing out of the Principal's default of the Contract, then this obligation shall be null and void, otherwise to remain in full force and effect.

The Surety (Sureties), for value received, hereby stipulates and agrees, upon written notice from the City that the City has determined that the Principal is in default of the Contract, to either (1) pay the full amount of the above penal sum in complete discharge and exoneration of this bond and of all the liabilities of the Surety relating to this bond, or (2) fully perform and complete the Work to be performed under the Contract, pursuant to the terms, conditions, and covenants thereof. The Surety (Sureties) further agrees, at its option, either to tender the penal sum or to commence and diligently perform the Work specified in the Contract, including physical site work, within twenty-five (25) business days after written notice thereof from the City and to complete all Work within the time set forth in the Contract or such other time as agreed to between the City and Surety in accordance with the Contract. The Surety and the City reserve all rights and defenses each may have against the other; provided, however, that the Surety expressly agrees that its reservation of rights shall not provide a basis for non-performance of its obligation to commence and to complete all Work as provided herein.

The Surety (Sureties), for value received, for itself and its successors and assigns, hereby stipulates and agrees that the obligation of said Surety (Sureties) and its bond shall be in no way impaired or affected by any extension of time, modification, omission, addition, or change in or to the said Contract or the Work to be performed thereunder, or by any payment thereunder before the time required therein, or by any waiver of any provisions thereof, or by any assignment, subletting or other transfer thereof or of any Work to be performed or any moneys due or to become due thereunder; and said Surety (Sureties) does hereby waive notice of any and all of such extensions, modifications, omissions, additions, changes, payments, waivers, assignments, subcontracts and transfers, and hereby expressly stipulates and agrees that any and all things done and omitted to be done by and in relation to assignees, subcontractors, and other transferees shall have the same effect as to said Surety (Sureties) as though done or omitted to be done by or in relation to said Principal.

Performance Bond #2 (Pages 96 to 99): Use if the total contract price is more than $5 Million.

IN WITNESS WHEREOF, The Principal and the Surety (Sureties) have hereunto set their hands and seals, and such of them as are corporations have caused their corporate seals to be hereunto affixed and these presents to be signed by their proper officers, this

28th day of December 20 15

(Seal)

Triumph Construction Corp. (L.S.)
Principal

(Seal)

By: _____
Surety
Liberty Mutual Insurance Company

By: Nicole T. Broderick
Nicole T. Broderick, Attorney-in-Fact
(Seal)
Surety

By: n/a
(Seal)
Surety

By: n/a
(Seal)
Surety

By: n/a
(Seal)
Surety

By: _____

Bond Premium Rate: $17/ $10/ $7.5/ $7/ $6.5 (Perf/Pay)
$2.30 / $2/ $1.75/ $1.5/ $1.4 (Maintenance)

Bond Premium Cost: $84,615 (Perf/Pay)
$17,554 (Maint)

If the Contractor (Principal) is a partnership, the bond should be signed by each of the individuals who are partners.

If the Contractor (Principal) is a corporation, the bond should be signed in its correct corporate name by a duly authorized officer, agent, or attorney-in-fact.

There should be executed an appropriate number of counterparts of the bond corresponding to the number of counterparts of the Contract.

Performance Bond #2 (Pages 96 to 99): Use if the total contract price is more than $5 Million.

ACKNOWLEDGMENT OF PRINCIPAL IF A CORPORATION

State of New York County of Bronx ss:

On this 28th day of December, 20 15 before me personally came Carlo Cuzzi,
to me known, who, being by me duly sworn did depose and say that he resides
at 45 Winchester Oval New Rochelle, NY 10801; that he/she is the President
of the corporation described in and which executed the foregoing instrument; that he/she signed his/her name to the foregoing instrument by order of the directors of said corporation as the duly authorized and binding act thereof.

NOTARY PUBLIC - STATE OF NEW YORK
No. 01JA6078625
Qualified in Westchester County
My Commission Expires August 05, 20 18

Notary Public or Commissioner of Deeds

ACKNOWLEDGMENT OF PRINCIPAL IF A PARTNERSHIP

State of _____ County of _____ ss:

On this _____ day of _____, 20 _____ before me personally came _____,
to me known, who, being by me duly sworn did depose and say that he/she resides at _____

_____; that he/she is _____ partner of _____, a limited/general partnership existing under the laws of the State of _____, the partnership described in and which executed the foregoing instrument; and that he/she signed his/her name to the foregoing instrument as the duly authorized and binding act of said partnership.

_____
Notary Public or Commissioner of Deeds

ACKNOWLEDGMENT OF PRINCIPAL IF AN INDIVIDUAL

State of _____ County of _____ ss.

On this _____ day of _____, 20_____ before me personally came _____,
to me known, who, being by me duly sworn did depose and say that he/she resides at _____

_____, and that he/she is the individual whose name is subscribed to the within instrument and acknowledged to me that by his/her signature on the instrument, said individual executed the instrument.

_____
Notary Public or Commissioner of Deeds

Each executed bond should be accompanied by: (a) appropriate acknowledgments of the respective parties; (b) appropriate duly certified copy of Power of Attorney or other certificate of authority where bond is executed by agent, officer or other representative of Principal or Surety; (c) a duly certified extract from By-Laws or resolutions of Surety under which Power of Attorney or other certificate of authority of its agent, officer or representative was issued, and (d) certified copy of latest published financial statement of assets and liabilities of Surety.

* * * * * * * *

Affix Acknowledgments and Justification of Sureties.

SURETY ACKNOWLEDGMENT

State of **New Jersey**

County of **Union**

On this **28th** day of **December**, **2015**, Before me personally came **Nicole T. Broderick** to me known, who being by me duly sworn, did depose and say that he/she is an Attorney-in-Fact of **Liberty Mutual Insurance Company** corporation described in and which executed the within instrument; that he/she knows the corporate seal of said corporation; that the seal affixed to the within instrument is such corporate seal, and that he/she signed the said instrument and affixed the said seal as Attorney-in-Fact by authority of the Board of Directors of said corporation and by authority of this office under the Standing Resolutions thereof.

CHERYL R. COLEMAN
Notary Public, State of New Jersey
No. 01CO2182370
Commission Expires Sept. 27, 20 20

My commission expires _____

Cheryl R. Coleman

THIS POWER OF ATTORNEY IS NOT VALID UNLESS IT IS PRINTED ON RED BACKGROUND.
This Power of Attorney limits the acts of those named herein, and they have no authority to bind the Company except in the manner and to the extent herein stated.

Certificate No. 7000056

American Fire and Casualty Company
The Ohio Casualty Insurance Company
Liberty Mutual Insurance Company
West American Insurance Company

POWER OF ATTORNEY

KNOWN ALL PERSONS BY THESE PRESENTS: That American Fire & Casualty Company and The Ohio Casualty Insurance Company are corporations duly organized under the laws of the State of New Hampshire, that Liberty Mutual Insurance Company is a corporation duly organized under the laws of the State of Massachusetts, and West American Insurance Company is a corporation duly organized under the laws of the State of Indiana (herein collectively called the "Companies"), pursuant to and by authority herein set forth, does hereby name, constitute and appoint, Cheryl R. Coleman; Lisa A. Anderson; Marc J. Michalewsky; Mary J. D'Amato; Nicole T. Broderick; Sandra A. Pace; Thomas M. True

all of the city of Westfield, state of NJ each individually if there be more than one named, its true and lawful attorney-in-fact to make, execute, seal, acknowledge and deliver, for and on its behalf as surety and as its act and deed, any and all undertakings, bonds, recognizances and other surety obligations, in pursuance of these presents and shall be as binding upon the Companies as if they have been duly signed by the president and attested by the secretary of the Companies in their own proper persons.

IN WITNESS WHEREOF, this Power of Attorney has been subscribed by an authorized officer or official of the Companies and the corporate seals of the Companies have been affixed thereto this 28th day of May, 2015.

American Fire and Casualty Company
The Ohio Casualty Insurance Company
Liberty Mutual Insurance Company
West American Insurance Company

By: David M. Carey
David M. Carey, Assistant Secretary

STATE OF PENNSYLVANIA ss
COUNTY OF MONTGOMERY

On this 28th day of May, 2015, before me personally appeared David M. Carey, who acknowledged himself to be the Assistant Secretary of American Fire and Casualty Company, Liberty Mutual Insurance Company, The Ohio Casualty Insurance Company, and West American Insurance Company, and that he, as such, being authorized so to do, execute the foregoing instrument for the purposes therein contained by signing on behalf of the corporations by himself as a duly authorized officer.

IN WITNESS WHEREOF, I have hereunto subscribed my name and affixed my notarial seal at Plymouth Meeting, Pennsylvania, on the day and year first above written.

COMMONWEALTH OF PENNSYLVANIA
Notarial Seal
Teresa Pastella, Notary Public
Plymouth Twp., Montgomery County
My Commission Expires March 28, 2017
Member, Pennsylvania Association of Notaries

By: Teresa Pastella
Teresa Pastella, Notary Public

This Power of Attorney is made and executed pursuant to and by authority of the following By-laws and Authorizations of American Fire and Casualty Company, The Ohio Casualty Insurance Company, Liberty Mutual Insurance Company, and West American Insurance Company which resolutions are now in full force and effect reading as follows:

ARTICLE IV – OFFICERS – Section 12. Power of Attorney. Any officer or other official of the Corporation authorized for that purpose in writing by the Chairman or the President, and subject to such limitation as the Chairman or the President may prescribe, shall appoint such attorneys-in-fact, as may be necessary to act in behalf of the Corporation to make, execute, seal, acknowledge and deliver as surety any and all undertakings, bonds, recognizances and other surety obligations. Such attorneys-in-fact, subject to the limitations set forth in their respective powers of attorney, shall have full power to bind the Corporation by their signature and execution of any such instruments and to attach thereto the seal of the Corporation. When so executed, such instruments shall be as binding as if signed by the President and attested to by the Secretary. Any power or authority granted to any representative or attorney-in-fact under the provisions of this article may be revoked at any time by the Board, the Chairman, the President or by the officer or officers granting such power or authority.

ARTICLE XIII – Execution of Contracts – SECTION 5. Surety Bonds and Undertakings. Any officer of the Company authorized for that purpose in writing by the chairman or the president, and subject to such limitations as the chairman or the president may prescribe, shall appoint such attorneys-in-fact, as may be necessary to act in behalf of the Company to make, execute, seal, acknowledge and deliver as surety any and all undertakings, bonds, recognizances and other surety obligations. Such attorneys-in-fact subject to the limitations set forth in their respective powers of attorney, shall have full power to bind the Company by their signature and execution of any such instruments and to attach thereto the seal of the Company. When so executed such instruments shall be as binding as if signed by the president and attested by the secretary.

Certificate of Designation – The President of the Company, acting pursuant to the Bylaws of the Company, authorizes David M. Carey, Assistant Secretary to appoint such attorneys-in-fact as may be necessary to act on behalf of the Company to make, execute, seal, acknowledge and deliver as surety any and all undertakings, bonds, recognizances and other surety obligations.

Authorization – By unanimous consent of the Company's Board of Directors, the Company consents that facsimile or mechanically reproduced signature of any assistant secretary of the Company, wherever appearing upon a certified copy of any power of attorney issued by the Company in connection with surety bonds, shall be valid and binding upon the Company with the same force and effect as though manually affixed.

I, Gregory W. Davenport, the undersigned, Assistant Secretary, of American Fire and Casualty Company, The Ohio Casualty Insurance Company, Liberty Mutual Insurance Company, and West American Insurance Company do hereby certify that the original power of attorney of which the foregoing is a full, true and correct copy of the Power of Attorney executed by said Companies, is in full force and effect and has not been revoked.

IN TESTIMONY WHEREOF, I have hereunto set my hand and affixed the seals of said Companies this 28th day of December, 2015.

By: Gregory W. Davenport
Gregory W. Davenport, Assistant Secretary

Not valid for mortgage, note, [illegible], letter of credit, currency rate, interest rate or residual value guarantees.

To confirm the validity of this Power of Attorney call 1-610-832-8240 between 9:00 am and 4:30 pm EST on any business day.

LMS_12873_122013

Liberty Mutual SURETY

LIBERTY MUTUAL INSURANCE COMPANY

FINANCIAL STATEMENT — DECEMBER 31, 2014

Assets

Cash and Bank Deposits	$744,221,142
*Bonds — U.S Government	1,718,117,704
*Other Bonds	11,205,872,087
*Stocks	9,533,437,819
Real Estate	277,742,849
Agents' Balances or Uncollected Premiums	4,150,041,316
Accrued Interest and Rents	129,261,358
Other Admitted Assets	14,896,464,393
Total Admitted Assets	**$42,655,158,668**

Liabilities

Unearned Premiums		$6,288,178,795
Reserve for Claims and Claims Expense		16,879,324,618
Funds Held Under Reinsurance Treaties		211,983,009
Reserve for Dividends to Policyholders		1,246,547
Additional Statutory Reserve		40,877,587
Reserve for Commissions, Taxes and Other Liabilities		2,664,248,124
Total		**$26,085,858,680**
Special Surplus Funds	$53,954,363	
Capital Stock	10,000,000	
Paid in Surplus	8,829,117,542	
Unassigned Surplus	7,676,228,083	
Surplus to Policyholders		16,569,299,988
Total Liabilities and Surplus		**$42,655,158,668**

LIBERTY MUTUAL INSURANCE COMPANY INCORPORATED 1912 MASSACHUSETTS

* Bonds are stated at amortized or investment value; Stocks at Association Market Values.
The foregoing financial information is taken from Liberty Mutual Insurance Company's financial statement filed with the state of Massachusetts Department of Insurance.

I, TIM MIKOLAJEWSKI, Assistant Secretary of Liberty Mutual Insurance Company, do hereby certify that the foregoing is a true, and correct statement of the Assets and Liabilities of said Corporation, as of December 31, 2014, to the best of my knowledge and belief.

IN WITNESS WHEREOF, I have hereunto set my hand and affixed the seal of said Corporation at Seattle, Washington, this 20th day of March, 2015.

T A Mikolajewski

Assistant Secretary

Bond No. 015-047-842

Payment Bond (Pages 100 to 103): Use for any contract for which a Payment Bond is required.

Bond No. 015-047-827

PAYMENT BOND

KNOW ALL PERSONS BY THESE PRESENTS, That we, Triumph Construction Corp.
1354 Seneca Avenue
Bronx, NY 10474

hereinafter referred to as the "Principal", and Liberty Mutual Insurance Company
1200 MacArthur Blvd., 3rd floor
Mahwah, NJ 07430

hereinafter referred to as the "Surety" ("Sureties") are held and firmly bound to THE CITY OF NEW YORK, hereinafter referred to as the "City" or to its successors and assigns, in the penal sum of

Ten Million Five Hundred Fifty Six Thousand One Hundred Ninety Nine and 64/100

($10,556,199.64) Dollars, lawful money of the United States, for the payment of which said sum of money well and truly to be made, we, and each of us, bind ourselves, our heirs, executors, administrators, successors and assigns, jointly and severally, firmly by these presents.

WHEREAS, the Principal is about to enter, or has entered, into a Contract in writing with the City for

FMS Project ID#: HWMM008 - Safety and Streetscape Improvements (E. 86th St.)/School Safety Neckdowns (Madison Avenue) - Borough of Manhattan, City of New York - PIN #8502013HW0020C

a copy of which Contract is annexed to and hereby made a part of this bond as though herein set forth in full;

NOW, THEREFORE, the conditions of this obligation are such that if the Principal, his or its representatives or assigns and other Subcontractors to whom Work under this Contract is sublet and his or their successors and assigns shall promptly pay or cause to be paid all lawful claims for

(a) Wages and compensation for labor performed and services rendered by all persons engaged in the prosecution of the Work under said Contract, and any amendment or extension thereof or addition thereto, whether such persons be agents servants or employees of the Principal or any such Subcontractor, including all persons so engaged who perform the work of laborers or mechanics at or in the vicinity of the site

Payment Bond (Pages 100 to 103): Use for any contract for which a Payment Bond is required.

of the Project regardless of any contractual relationship between the Principal or such Subcontractors, or his or their successors or assigns, on the one hand and such laborers or mechanics on the other, but not including office employees not regularly stationed at the site of the project; and

(b) Materials and supplies (whether incorporated in the permanent structure or not), as well as teams, fuels, oils, implements or machinery furnished, used or consumed by said Principal or any subcontractor at or in the vicinity of the site of the Project in the prosecution of the Work under said Contract and any amendment or extension thereof or addition thereto; then this obligation shall be void, otherwise to remain in full force and effect.

This bond is subject to the following additional conditions, limitations and agreements:

(a) The Principal and Surety (Sureties) agree that this bond shall be for the benefit of any materialmen or laborer having a just claim, as well as the City itself.

(b) All persons who have performed labor, rendered services or furnished materials and supplies, as aforesaid, shall have a direct right of action against the Principal and his, its or their successors and assigns, and the Surety (Sureties) herein, or against either or both or any of them and their successors and assigns. Such persons may sue in their own name, and may prosecute the suit to judgment and execution without the necessity of joining with any other persons as party plaintiff.

(c) The Principal and Surety (Sureties) agree that neither of them will hold the City liable for any judgment for costs of otherwise, obtained by either or both of them against a laborer or materialman in a suit brought by either a laborer or materialman under this bond for moneys allegedly due for performing work or furnishing material.

(d) The Surety (Sureties) or its successors and assigns shall not be liable for any compensation recoverable by an employee or laborer under the Workmen's Compensation Law.

(e) In no event shall the Surety (Sureties), or its successors or assigns, be liable for a greater sum than the penalty of this bond or be subject to any suit, action or proceeding hereon that is instituted by any person, firm, or corporation hereunder later than two years after the complete performance of said Contract and final settlement thereof.

The Principal, for himself and his successors and assigns, and the Surety (Sureties), for itself and its successors and assigns, do hereby expressly waive any objection that might be interposed as to the right of the City to require a bond containing the foregoing provisions, and they do hereby further expressly waive any defense which they or either of them might interpose to an action brought hereon by any person, firm or corporation, including subcontractors, materialmen and third persons, for work, labor, services, supplies or material performed rendered, or furnished as aforesaid upon the ground that there is no law authorizing the City to require the foregoing provisions to be place in this bond.

And the Surety (Sureties), for value received, for itself and its successors and assigns, hereby stipulates and agrees that the obligation of said Surety (Sureties), and its bonds shall be in no way impaired or affected by any extension of time, modification, omission, addition, or change in or of the said Contract or the work to be performed thereunder, or by any payment thereunder before the time required therein, or by any waiver of any provisions thereof, or by any assignment, subletting or other transfer thereof or of any part thereof, or of any Work to be performed, or any moneys due to become due thereunder and said Surety (Sureties) does hereby waive notice of any and all of such extensions, modifications, omissions, additions, changes, payments, waivers, assignments, subcontracts and transfers, and hereby expressly stipulates and agrees that any and all things done and omitted to be done by and in relation to assignees, Subcontractors, and other transferees shall have the same effect as to said Surety (Sureties) as though done or omitted to be done or in relation to said Principal.

Payment Bond (Pages 100 to 103): Use for any contract for which a Payment Bond is required.

IN WITNESS WHEREOF, the Principal and the Surety (Sureties) have hereunto set their hands and seals, and such of them as are corporations have caused their corporate seals to be hereunto affixed and these presents to be signed by their proper officers, this 28th day of December, 2015.

(Seal)

Triumph Construction Corp. (L.S.)
Principal

By: _____

(Seal)

Liberty Mutual Insurance Company
Surety

By: Nicole T. Broderick
Nicole T. Broderick, Attorney-in-Fact

(Seal)

_____
Surety

By: _____

(Seal)

_____
Surety

By: _____

(Seal)

_____
Surety

By: _____

If the Contractor (Principal) is a partnership, the bond should be signed by each of the individuals who are partners.

If the Contractor (Principal) is a corporation, the bond should be signed in its correct corporate name by a duly authorized officer, agent, or attorney-in-fact.

There should be executed an appropriate number of counterparts of the bond corresponding to the number of counterparts of the Contract.

Payment Bond (Pages 100 to 103): Use for any contract for which a Payment Bond is required.

ACKNOWLEDGMENT OF PRINCIPAL, IF A CORPORATION

State of New York County of Bronx ss:

On this 28th day of December 2015, before me personally came Carlo Cuzzi to me known, who, being by me duly sworn did depose and say that he resides at 45 Winchester Oval New Rochelle, NY 10801 that he is the President of the corporation described in and which executed the foregoing instrument; that he knows the seal of said corporation; that one of the seals affixed to said instrument is such seal; that it was so affixed by order of the directors of said corporation, and that he signed his name thereto by like order.

SHIRLEY JACOBS
NOTARY PUBLIC-STATE OF NEW YORK
No. 01JA6078625
Qualified in Westchester County
My Commission Expires August 05, 2018

Notary Public or Commissioner of Deeds

ACKNOWLEDGMENT OF PRINCIPAL, IF A PARTNERSHIP

State of _____ County of _____ ss:

On this _____ day of _____, _____, before me personally appeared _____ to me known, and known to me to be one of the members of the firm of _____ described in and who executed the foregoing instrument; and he acknowledged to me that he executed the same as and for the act and deed of said firm.

_____
Notary Public or Commissioner of Deeds

ACKNOWLEDGMENT OF PRINCIPAL, IF AN INDIVIDUAL

State of _____ County of _____ ss:

On this _____ day of _____, _____, before me personally appeared _____ to me known, and known to me to be the person described in and who executed the foregoing instrument; and acknowledged that he executed the same.

_____
Notary Public or Commissioner of Deeds

Each executed bond should be accompanied by: (a) appropriate acknowledgments of the respective parties; (b) appropriate duly certified copy of Power of Attorney or other certificate of authority where bond is executed by agent, officer or other representative of Principal or Surety; (c) a duly certified extract from By-Laws or resolutions of Surety under which Power of Attorney or other certificate of authority of its agent, officer or representative was issued, and (d) certified copy of latest published financial statement of assets and liabilities of Surety.

* * * * * * * *

Affix Acknowledgments and Justification of Sureties.

SURETY ACKNOWLEDGMENT

State of **New Jersey**

County of **Union**

On this **28th** day of **December**, **2015**, Before me personally came **Nicole T. Broderick** to me known, who being by me duly sworn, did depose and say that he/she is an Attorney-in-Fact of **Liberty Mutual Insurance Company** corporation described in and which executed the within instrument; that he/she knows the corporate seal of said corporation; that the seal affixed to the within instrument is such corporate seal, and that he/she signed the said instrument and affixed the said seal as Attorney-in-Fact by authority of the Board of Directors of said corporation and by authority of this office under the Standing Resolutions thereof.

CHERYL R. COLEMAN
Notary Public, State of New Jersey
No. 01CO2182370
Commission Expires Sept. 27, 20 20

My commission expires _____

Cheryl R. Coleman

THIS POWER OF ATTORNEY IS NOT VALID UNLESS IT IS PRINTED ON RED BACKGROUND.
This Power of Attorney limits the acts of those named herein, and they have no authority to bind the Company except in the manner and to the extent herein stated.

Certificate No. 7000055

American Fire and Casualty Company
The Ohio Casualty Insurance Company
Liberty Mutual Insurance Company
West American Insurance Company

POWER OF ATTORNEY

KNOWN ALL PERSONS BY THESE PRESENTS: That American Fire & Casualty Company and The Ohio Casualty Insurance Company are corporations duly organized under the laws of the State of New Hampshire, that Liberty Mutual Insurance Company is a corporation duly organized under the laws of the State of Massachusetts, and West American Insurance Company is a corporation duly organized under the laws of the State of Indiana (herein collectively called the "Companies"), pursuant to and by authority herein set forth, does hereby name, constitute and appoint, Cheryl R. Coleman; Lisa A. Anderson; Marc J. Michalewsky; Mary J. D'Amato; Nicole T. Broderick; Sandra A. Pace; Thomas M. True

all of the city of Westfield, state of NJ each individually if there be more than one named, its true and lawful attorney-in-fact to make, execute, seal, acknowledge and deliver, for and on its behalf as surety and as its act and deed, any and all undertakings, bonds, recognizances and other surety obligations, in pursuance of these presents and shall be as binding upon the Companies as if they have been duly signed by the president and attested by the secretary of the Companies in their own proper persons.

IN WITNESS WHEREOF, this Power of Attorney has been subscribed by an authorized officer or official of the Companies and the corporate seals of the Companies have been affixed thereto this 28th day of May, 2015.

American Fire and Casualty Company
The Ohio Casualty Insurance Company
Liberty Mutual Insurance Company
West American Insurance Company

By: David M. Carey
David M. Carey, Assistant Secretary

STATE OF PENNSYLVANIA ss
COUNTY OF MONTGOMERY

On this 28th day of May, 2015, before me personally appeared David M. Carey, who acknowledged himself to be the Assistant Secretary of American Fire and Casualty Company, Liberty Mutual Insurance Company, The Ohio Casualty Insurance Company, and West American Insurance Company, and that he, as such, being authorized so to do, execute the foregoing instrument for the purposes therein contained by signing on behalf of the corporations by himself as a duly authorized officer.

IN WITNESS WHEREOF, I have hereunto subscribed my name and affixed my notarial seal at Plymouth Meeting, Pennsylvania, on the day and year first above written.

COMMONWEALTH OF PENNSYLVANIA
Notarial Seal
Teresa Pastella, Notary Public
Plymouth Twp., Montgomery County
My Commission Expires March 28, 2017
Member, Pennsylvania Association of Notaries

By: Teresa Pastella
Teresa Pastella, Notary Public

This Power of Attorney is made and executed pursuant to and by authority of the following By-laws and Authorizations of American Fire and Casualty Company, The Ohio Casualty Insurance Company, Liberty Mutual Insurance Company, and West American Insurance Company which resolutions are now in full force and effect reading as follows:

ARTICLE IV – OFFICERS – Section 12. Power of Attorney. Any officer or other official of the Corporation authorized for that purpose in writing by the Chairman or the President, and subject to such limitation as the Chairman or the President may prescribe, shall appoint such attorneys-in-fact, as may be necessary to act in behalf of the Corporation to make, execute, seal, acknowledge and deliver as surety any and all undertakings, bonds, recognizances and other surety obligations. Such attorneys-in-fact, subject to the limitations set forth in their respective powers of attorney, shall have full power to bind the Corporation by their signature and execution of any such instruments and to attach thereto the seal of the Corporation. When so executed, such instruments shall be as binding as if signed by the President and attested to by the Secretary. Any power or authority granted to any representative or attorney-in-fact under the provisions of this article may be revoked at any time by the Board, the Chairman, the President or by the officer or officers granting such power or authority.

ARTICLE XIII – Execution of Contracts – SECTION 5. Surety Bonds and Undertakings. Any officer of the Company authorized for that purpose in writing by the chairman or the president, and subject to such limitations as the chairman or the president may prescribe, shall appoint such attorneys-in-fact, as may be necessary to act in behalf of the Company to make, execute, seal, acknowledge and deliver as surety any and all undertakings, bonds, recognizances and other surety obligations. Such attorneys-in-fact subject to the limitations set forth in their respective powers of attorney, shall have full power to bind the Company by their signature and execution of any such instruments and to attach thereto the seal of the Company. When so executed such instruments shall be as binding as if signed by the president and attested by the secretary.

Certificate of Designation – The President of the Company, acting pursuant to the Bylaws of the Company, authorizes David M. Carey, Assistant Secretary to appoint such attorneys-in-fact as may be necessary to act on behalf of the Company to make, execute, seal, acknowledge and deliver as surety any and all undertakings, bonds, recognizances and other surety obligations.

Authorization – By unanimous consent of the Company's Board of Directors, the Company consents that facsimile or mechanically reproduced signature of any assistant secretary of the Company, wherever appearing upon a certified copy of any power of attorney issued by the Company in connection with surety bonds, shall be valid and binding upon the Company with the same force and effect as though manually affixed.

I, Gregory W. Davenport, the undersigned, Assistant Secretary, of American Fire and Casualty Company, The Ohio Casualty Insurance Company, Liberty Mutual Insurance Company, and West American Insurance Company do hereby certify that the original power of attorney of which the foregoing is a full, true and correct copy of the Power of Attorney executed by said Companies, is in full force and effect and has not been revoked.

IN TESTIMONY WHEREOF, I have hereunto set my hand and affixed the seals of said Companies this 28th day of December, 20 15.

By: Gregory W. Davenport
Gregory W. Davenport, Assistant Secretary

Not valid for mortgage, note, letter of credit, currency rate, interest rate or residual value guarantees.

To confirm the validity of this Power of Attorney call 1-610-832-8240 between 9:00 am and 4:30 pm EST on any business day.

LMS_12873_122013

Liberty Mutual SURETY

LIBERTY MUTUAL INSURANCE COMPANY

FINANCIAL STATEMENT — DECEMBER 31, 2014

Assets

Cash and Bank Deposits	$744,221,142
*Bonds — U.S Government	1,718,117,704
*Other Bonds	11,205,872,087
*Stocks	9,533,437,819
Real Estate	277,742,849
Agents' Balances or Uncollected Premiums	4,150,041,316
Accrued Interest and Rents	129,261,358
Other Admitted Assets	14,896,464,393
Total Admitted Assets	**$42,655,158,668**

Liabilities

Unearned Premiums		$6,288,178,795
Reserve for Claims and Claims Expense		16,879,324,618
Funds Held Under Reinsurance Treaties		211,983,009
Reserve for Dividends to Policyholders		1,246,547
Additional Statutory Reserve		40,877,587
Reserve for Commissions, Taxes and Other Liabilities		2,664,248,124
Total		**$26,085,858,680**
Special Surplus Funds	$53,954,363	
Capital Stock	10,000,000	
Paid in Surplus	8,829,117,542	
Unassigned Surplus	7,676,228,083	
Surplus to Policyholders		16,569,299,988
Total Liabilities and Surplus		**$42,655,158,668**

LIBERTY MUTUAL INSURANCE COMPANY INCORPORATED 1912 MASSACHUSETTS

* Bonds are stated at amortized or investment value; Stocks at Association Market Values.
The foregoing financial information is taken from Liberty Mutual Insurance Company's financial statement filed with the state of Massachusetts Department of Insurance.

I, TIM MIKOLAJEWSKI, Assistant Secretary of Liberty Mutual Insurance Company, do hereby certify that the foregoing is a true, and correct statement of the Assets and Liabilities of said Corporation, as of December 31, 2014, to the best of my knowledge and belief.

IN WITNESS WHEREOF, I have hereunto set my hand and affixed the seal of said Corporation at Seattle, Washington, this 20th day of March, 2015.

T A Mikolajewski

Assistant Secretary

TRIUM-3 OP ID: SL

CERTIFICATE OF LIABILITY INSURANCE

DATE (MM/DD/YYYY) 12/28/2015

THIS CERTIFICATE IS ISSUED AS A MATTER OF INFORMATION ONLY AND CONFERS NO RIGHTS UPON THE CERTIFICATE HOLDER. THIS CERTIFICATE DOES NOT AFFIRMATIVELY OR NEGATIVELY AMEND, EXTEND OR ALTER THE COVERAGE AFFORDED BY THE POLICIES BELOW. THIS CERTIFICATE OF INSURANCE DOES NOT CONSTITUTE A CONTRACT BETWEEN THE ISSUING INSURER(S), AUTHORIZED REPRESENTATIVE OR PRODUCER, AND THE CERTIFICATE HOLDER.

IMPORTANT: If the certificate holder is an ADDITIONAL INSURED, the policy(ies) must be endorsed. If SUBROGATION IS WAIVED, subject to the terms and conditions of the policy, certain policies may require an endorsement. A statement on this certificate does not confer rights to the certificate holder in lieu of such endorsement(s).

PRODUCER True & Associates 325 North Avenue East Westfield, NJ 07090 Jonathan Raucci	CONTACT NAME: PHONE (A/C, No, Ext): 908-232-0760 FAX (A/C, No): 908-232-5761 E-MAIL ADDRESS:
INSURED Triumph Construction Corp. 1354 Seneca Avenue Bronx, NY 10474	INSURER(S) AFFORDING COVERAGE — NAIC # INSURER A : The Travelers Indemnity Co. — 25658 INSURER B : Liberty Mutual Fire Ins Co — 23035 INSURER C : Scottsdale Indemnity Co. — 15580 INSURER D : Charter Oak Fire Insurance Co — 25615 INSURER E : Wesco Insurance Co — 25011 INSURER F : Navigators Insurance Company — 42307

COVERAGES **CERTIFICATE NUMBER:** **REVISION NUMBER:**

THIS IS TO CERTIFY THAT THE POLICIES OF INSURANCE LISTED BELOW HAVE BEEN ISSUED TO THE INSURED NAMED ABOVE FOR THE POLICY PERIOD INDICATED. NOTWITHSTANDING ANY REQUIREMENT, TERM OR CONDITION OF ANY CONTRACT OR OTHER DOCUMENT WITH RESPECT TO WHICH THIS CERTIFICATE MAY BE ISSUED OR MAY PERTAIN, THE INSURANCE AFFORDED BY THE POLICIES DESCRIBED HEREIN IS SUBJECT TO ALL THE TERMS, EXCLUSIONS AND CONDITIONS OF SUCH POLICIES. LIMITS SHOWN MAY HAVE BEEN REDUCED BY PAID CLAIMS.

INSR LTR	TYPE OF INSURANCE	ADDL INSR	SUBR WVD	POLICY NUMBER	POLICY EFF (MM/DD/YYYY)	POLICY EXP (MM/DD/YYYY)	LIMITS	
A	GENERAL LIABILITY X COMMERCIAL GENERAL LIABILITY CLAIMS-MADE X OCCUR X Contractual Liab X X,C,U Included GEN'L AGGREGATE LIMIT APPLIES PER: POLICY X PRO-JECT LOC	X		VT1NK-EXGL-828K6610-IND15	08/01/2015	08/01/2016	EACH OCCURRENCE DAMAGE TO RENTED PREMISES (Ea occurrence) MED EXP (Any one person) PERSONAL & ADV INJURY GENERAL AGGREGATE PRODUCTS - COMP/OP AGG Empl Ben	$ 2,000,000 $ 300,000 $ $ 1,000,000 $ 4,000,000 $ 4,000,000 $ 1,000,000
	AUTOMOBILE LIABILITY X ANY AUTO ALL OWNED AUTOS SCHEDULED AUTOS X HIRED AUTOS X NON-OWNED AUTOS	X		AS7-Z11-260471-015	08/01/2015	08/01/2016	COMBINED SINGLE LIMIT (Ea accident) BODILY INJURY (Per person) BODILY INJURY (Per accident) PROPERTY DAMAGE (PER ACCIDENT)	$ 1,000,000 $ $ $
C	UMBRELLA LIAB X OCCUR X EXCESS LIAB CLAIMS-MADE DED RETENTION $			NXI0000096	08/01/2015	08/01/2016	EACH OCCURRENCE AGGREGATE	$ 3,000,000 $ 3,000,000
D	WORKERS COMPENSATION AND EMPLOYERS' LIABILITY ANY PROPRIETOR/PARTNER/EXECUTIVE OFFICER/MEMBER EXCLUDED? Y/N (Mandatory in NH) If yes, describe under DESCRIPTION OF OPERATIONS below	N/A		VTC2O-UB-4E994081-15	08/01/2015	08/01/2016	X WC STATU-TORY LIMITS OTH-ER E.L. EACH ACCIDENT E.L. DISEASE - EA EMPLOYEE E.L. DISEASE - POLICY LIMIT	$ 1,000,000 $ 1,000,000 $ 1,000,000
E	Disability			WDL-0232606	01/01/2015	12/31/2016	Statutory	Limits
F	Excess Liability			IS15EXC735358IV	08/01/2015	08/01/2016	EaOcc/Agg	10,000,000

DESCRIPTION OF OPERATIONS / LOCATIONS / VEHICLES (Attach ACORD 101, Additional Remarks Schedule, if more space is required)

RE: FMS ID: HWMM008, E-PIN: 85015B0145001, DDC PIN: 8502013HW0020C, Safety and Streetscape improvements (E. 86th St)/School safety neckdowns (Madison Avenue) - Borough of Manhattan
See attached.

CERTIFICATE HOLDER

NYCDDC.

New York City Department of
Design and Construction
Att: John Goddard
30-30 Thomson Avenue-1st Floor
Long Island City,, NY 11101

CANCELLATION

SHOULD ANY OF THE ABOVE DESCRIBED POLICIES BE CANCELLED BEFORE THE EXPIRATION DATE THEREOF, NOTICE WILL BE DELIVERED IN ACCORDANCE WITH THE POLICY PROVISIONS.

AUTHORIZED REPRESENTATIVE

Thomas M Stus

© 1988-2010 ACORD CORPORATION. All rights reserved.

The ACORD name and logo are registered marks of ACORD

The following are named as Additional Insureds on the General Liability policy as required by written contract :City of New York,including its officials & employees,The New York City Transit Authority (NYCTA), Manhattan & Bronx Surface Transit Operation Authority (MaBSTOA), Staten Island Rapid Transit Operation Authority (SIRTOA), Metropolitan Transportation Authority(MTA), its subsidiaries and affiliated companies,the Metro-North Railroad (MNRR), Metropolitan Transportation Authority (MTA),Midtown TDR Ventures, LLC, & Midtown Trackage Ventures, LLC, The State of Connecticut and CT Department of Transportation (CDOT),its subsidiaries & affiliated companies,New York State,including its officials & employees,Federal Transit Administration, including its officials & employees & Consolidated Edison. The following are named as Additional Insureds on the Automobile policy as per written contract: City of New York, including its officials and employees, The New York City Transit Authority (NYCTA), Manhattan and Bronx Surface Transit Operation Authority (MaBSTOA), Staten Island Rapid Transit Operation Authority (SIRTOA), Metropolitan Transportation Authority (MTA), its subsidiaries and affiliated companies, including employees of any insured acting in the scope of their employment;

The Metro-North Railroad (MNRR), Metropolitan Transportation Authority (MTA), Midtown TDR Ventures, LLC, & Midtown Trackage Ventures, LLC, The State of COnnecticut and CT Department of Transportation (CDOT), its subsidiaries and affiliated companies, including employees of any insured acting in the scope of their employment; New York State, including its officials and employees; and Federal Transit Administration, including its officials and employees.

Insurer D: Charter Oak Fire Insurance Co.
Property Policy - Policy No. QT6609B376072COF14
Policy Term 8/1/15 to 8/1/16
Business Personal Property coverage at field office - $40,000 limit

SCHEDULE A
(GENERAL CONDITIONS TO CONSTRUCTION CONTRACT)
(GENERAL CONDITIONS RELATING TO ARTICLE 22 – INSURANCE)

PART III. BROKER'S CERTIFICATION

Pursuant to Article 22.3.3 of the **Contract**, every Certificate of Insurance must be accompanied by either the following certification by the broker setting forth the following text and required information and signatures or certified copies of all policies referenced in the Certificate of Insurance.

CERTIFICATION BY BROKER

The undersigned insurance broker represents to the City of New York that the attached Certificate of Insurance is accurate in all material respects, and that the described insurance is effective as of the date of this Certification.

True & Associates
[Name of broker (typewritten)]

325 North Avenue East, WEstfield, NJ 07090
[Address of broker (typewritten)]

ttrue@trueassoc.com
[Email address of broker (typewritten)]

908-232-0760
[Phone number/Fax number of broker (typewritten)]

[Signature of authorized official or broker]

Thomas True, President
[Name and title of authorized official (typewritten)]

State of NJ .....)
) ss.:
County of Union .....)

Sworn to before me this 28th day of DEcember, 2015

NOTARY PUBLIC FOR THE STATE OF NJ

Susan A. Lojo
NOTARY PUBLIC OF
NEW JERSEY
Commission Expires
November 7, 2017

☐ Capital Contract
☐ Operating Contract
☒ Entry Permit or Firm

Metro-North Railroad
CERTIFICATE OF INSURANCE

AGREEMENT or CONTRACT #: HWMM008	AGREEMENT or CONTRACT NAME/DESCRIPTION: Safety and streetscape improvements(E.86th St)/School safety neckdowns (Madison Ave) – Borough of Manhattan

INSURANCE PRODUCER: True & Associates ADDRESS: 325 North Ave E, Westfield, NJ 07090 PHONE #: 908-232-0760	CERTIFICATE ISSUANCE DATE: 12/28/15	DATE RECEIVED:

REFERENCE #:

INSURED: Triumph Construction Corp.
ADDRESS: 1354 Seneca Avenue
PHONE #: 718-861-6060

CERTIFICATE HOLDER: Metro-North Railroad/MTA
Attention: Risk & Insurance Management
ADDRESS: 2 Broadway 21st Floor
Phone #: New York, NY 10004
(646) 252-1430

CO LTR	COMPANIES AFFORDING COVERAGE	
A	The Travelers Indemnity Co.	NAIC # 25658
B	Liberty Mutual Fire Ins. Co.	NAIC #23035
C	Scottsdale Indemnity Co.	NAIC # 15580
D	Charter Oak Fire Insurance Co.	NAIC # 25615
E	Wesco Insurance Co.	NAIC # 25011
F	Navigators Insurance Company	NAIC # 42307
G		NAIC #

COVERAGES (See Notes 1 and 2)

CO LTR	TYPE OF INSURANCE	POLICY NUMBER	EFFECTIVE DATE	EXPIRATION DATE	LIMITS	
A	GENERAL LIABILITY ☒ Commercial General Liability Form ☒ Underground Expl.& Collapse Hazard ☒ Products/Completed Operations ☒ Contractual Liability ☒ Independent Contractors ☒ Fifty Foot Exclusion Removed ☒ Personal & Advertising Injury ☐ SIR/Deductible $_____	VT1NKEXGL828K6610IND15	08/01/15	08/01/16	BI & PD COMBINED OCCURRENCE	$2,000,000
					GENERAL AGGREGATE	$4,000,000
					PRODUCTS/COMPLETED OPERATIONS AGGREGATE	$4,000,000
					OTHER	$
B	AUTOMOBILE LIABILITY ☒ Any Auto ☐ Owned Autos ☐ Hired Autos ☐ Non-Owned Autos	AS7-Z11-260471-015	08/01/15	08/01/16	BODILY INJURY (Per Occurrence)	$
					PROPERTY DAMAGE (Per Occurrence	$
					BODILY INJURY/PROPERTY DAMAGE COMBINED SINGLE LIMIT (Each Accident	$1,000,000
	GARAGE LIABILITY ☐ Any Auto				AUTO ONLY EACH ACCIDENT	$
					OTHER THAN AUTO ONLY EA ACC	$
					OTHER THAN AUTO ONLY AGG	$
C	EXCESS LIABILITY ☒ Umbrella Form ☐ Other Than Umbrella Form ☐ SIR/Deductible $_____	NXI0000096	08/01/15	08/01/16	EACH OCCURRENCE	$3,000,000
					AGGREGATE	$3,000,000
F	WORKER'S COMPENSATION AND EMPLOYER'S LIABILITY ☐ USLH ☐ Jones Act ☐ "All States" Coverage	VTC20UB4E9940815	08/01/15	08/01/16	☒ STATUTORY LIMITS	
					EMPLOYER'S LIABILITY	$1,000,000
	PROFESSIONAL LIABILITY ☐ Includes Pollution Liability ☐ Deductible $_____					$
D	OTHER: Disability	WDL0232606	01/01/15	12/31/16	Statutory Limits	$
E	OTHER: Excess Liability	IS15EXC735358IV	08/01/15	08/01/16	Ea Occ/Agg	$10,000,000
	OTHER: _____					$

EVIDENCE OF RAILROAD PROTECTIVE LIABILITY AND/OR BUILDER'S RISK INSURANCE, WHEN APPLICABLE, REQUIRES SUBMISSION OF THE ORIGINAL POLICY.
THE ORIGINAL BINDER(S) WILL BE ACCEPTED, PENDING ISSUANCE OF THE ORIGINAL POLICY(S). *Revised 8/09*

CERTIFICATE OF INSURANCE **NYCT** **(Continued) Page 2**

LIABILITY COVERAGES:

ADDITIONAL INSUREDS (See Note 3) Check all that apply ☒
Coverage: Commercial Liability, Garage Liability, Excess/Umbrella Liability Contractor's Pollution Liability, Pollution Legal Liability, etc.

For all MNR:
- ☒ Metro-North Commuter Railroad Company
- ☒ Metropolitan Transportation Authority, including its subsidiaries and affiliates
- ☒ Connecticut Department of Transportation (CDOT)
- ☒ The State of Connecticut
- ☒ Midtown Trackage Ventures LLC
- ☒ Midtown TDR Ventures LLC
- ☐ National Railroad Passenger Corp (Amtrak)
- ☐ NJ Transit Rail Operations Inc.
- ☐ New Jersey Transit Corporation
- ☐ CSX Transportation Inc. & New York Central Lines LLC
- ☐ Delaware & Hudson Railway Company, Inc.
- ☐ Norfolk Southern Railway Company & Pennsylvania Lines LLC
- ☐ Housatonic Railroad Company
- ☐ Providence & Worcester Railroad Company
- ☐ Danbury Terminal Railroad Co.
- ☐ Maybrook Railroad Company
- ☐ Other: _____

PROPERTY COVERAGES:

(See Note 3) Check all that apply ☒

☐ **NAMED INSUREDS**
Coverage: Property, etc.

☐ **ADDITIONAL NAMED INSUREDS/LOSS PAYEE**
Builder's Risk, etc.

☐ **LOSS PAYEES**
Coverage: Crime Insurance, Valuable Papers

- ☐ Metro-North Commuter Railroad Company
- ☐ Metropolitan Transportation Authority, including its subsidiaries and affiliates
- ☐ Connecticut Department of Transportation (CDOT)
- ☐ The State of Connecticut
- ☐ Midtown Trackage Ventures LLC
- ☐ Midtown TDR Ventures LLC
- ☐ National Railroad Passenger Corp (Amtrak)
- ☐ NJ Transit Rail Operations Inc.
- ☐ New Jersey Transit Corporation
- ☐ CSX Transportation Inc. & New York Central Lines LLC
- ☐ Delaware & Hudson Railway Company, Inc.
- ☐ Norfolk Southern Railway Company & Pennsylvania Lines LLC
- ☐ Housatonic Railroad Company
- ☐ Providence & Worcester Railroad Company
- ☐ Danbury Terminal Railroad Co.
- ☐ Maybrook Railroad Company
- ☐ Other: _____

NOTE 1: The subscribing insurance company(s), authorized to do business in the State of New York, certifies that insurance of the kinds and types and for limits of liability herein stated, covering the Agreement/Contract herein designated, has been procured by and furnished on behalf of the Insured and is in full force and effect for the period listed on the front of this Certificate of Insurance. In addition, the subscribing insurance company(s) certifies that the insurance limits for General Liability Insurance are not amended by deductible clauses of any nature except as has been disclosed to and approved by Metro-North; and that coverage is afforded for the Insured's obligations under that provision of the contract providing for indemnification of the Indemnified Parties, including the Metro-North, named therein. When applicable, the subscribing insurance company(s) certifies that any exclusion applying to construction or demolition operations on or within fifty (50) feet of railroad property (stations, yards, tracks, etc.) has been voided; and any employer liability exclusion which may otherwise operate to exclude claims for bodily injury asserted by an employee of an additional insured shall be voided.

NOTE 2: The subscribing insurance company(s) shall endeavor that no policy referred to herein shall be changed or canceled until thirty (30) days written notice has been sent to the following address: Metro-North Railroad/MTA c/o MTA Risk and Insurance Management Department, 2 Broadway, 21st Floor, New York, NY 10004.

NOTE 3: All references to Named Insureds and Additional Insureds include those entities' directors, officers, employees, partners, agents, subsidiaries and affiliates.

NOTE 4: This certificate is issued to the Certificate Holder in consideration of the Agreement/Contract entered into with the named insured. It is understood and agreed that the certificate holder relies on the certificate as basis for continuing such Agreement/Contract with the name insured.

AUTHORIZED INSURER/PRODUCER True & Associates

BY Thomas True
(signature of authorized Insurer/Producer)

TITLE President

STATE OF New Jersey)
) s.s.
COUNTY OF Union)

On this 28th day of December 20 15, before me personally came Thomas True, to me known, who being duly sworn, did depose and say that he/she resides in Annandale, NJ, that he/she is the President of the corporation and described in and which executed the foregoing Certificate of Insurance, that he/she is fully authorized to execute the foregoing Certificate of Insurance.

Susan A. Lojo
NOTARY PUBLIC OF NEW JERSEY
Commission Expires November 7, 2017

Susan A. Lojo
(Notary Public)

CERTIFICATES OF INSURANCE MUST BE COMPLETED BY AUTHORIZED INSURANCE REPRESENTATIVES ONLY.

Performance Bond #2 (Pages 96 to 99): Use if the total contract price is more than $5 Million.

good any such default and shall protect the said City of New York against, and pay any and all amounts, damages, cost and judgments which may or shall be recovered against said City or its officers or agents or which the said City of New York may be called upon to pay any person or corporation by reason of any damages arising or growing out of the Principal's default of the Contract, then this obligation shall be null and void, otherwise to remain in full force and effect.

The Surety (Sureties), for value received, hereby stipulates and agrees, upon written notice from the City that the City has determined that the Principal is in default of the Contract, to either (1) pay the full amount of the above penal sum in complete discharge and exoneration of this bond and of all the liabilities of the Surety relating to this bond, or (2) fully perform and complete the Work to be performed under the Contract, pursuant to the terms, conditions, and covenants thereof. The Surety (Sureties) further agrees, at its option, either to tender the penal sum or to commence and diligently perform the Work specified in the Contract, including physical site work, within twenty-five (25) business days after written notice thereof from the City and to complete all Work within the time set forth in the Contract or such other time as agreed to between the City and Surety in accordance with the Contract. The Surety and the City reserve all rights and defenses each may have against the other; provided, however, that the Surety expressly agrees that its reservation of rights shall not provide a basis for non-performance of its obligation to commence and to complete all Work as provided herein.

The Surety (Sureties), for value received, for itself and its successors and assigns, hereby stipulates and agrees that the obligation of said Surety (Sureties) and its bond shall be in no way impaired or affected by any extension of time, modification, omission, addition, or change in or to the said Contract or the Work to be performed thereunder, or by any payment thereunder before the time required therein, or by any waiver of any provisions thereof, or by any assignment, subletting or other transfer thereof or of any Work to be performed or any moneys due or to become due thereunder; and said Surety (Sureties) does hereby waive notice of any and all of such extensions, modifications, omissions, additions, changes, payments, waivers, assignments, subcontracts and transfers, and hereby expressly stipulates and agrees that any and all things done and omitted to be done by and in relation to assignees, subcontractors, and other transferees shall have the same effect as to said Surety (Sureties) as though done or omitted to be done by or in relation to said Principal.

Performance Bond #2 (Pages 96 to 99): Use if the total contract price is more than $5 Million.

IN WITNESS WHEREOF, The Principal and the Surety (Sureties) have hereunto set their hands and seals, and such of them as are corporations have caused their corporate seals to be hereunto affixed and these presents to be signed by their proper officers, this

_____ day of _____ 20 _____.

(Seal)

_____(L.S.)
Principal

By:_____.

(Seal)

Surety

By:_____.
_____.

(Seal)

Surety

By:_____.
_____.

(Seal)

Surety

By:_____.
_____.

(Seal)

Surety

By:_____.

(Seal)

Surety

By:_____.

Bond Premium Rate _____.

Bond Premium Cost _____.

If the Contractor (Principal) is a partnership, the bond should be signed by each of the individuals who are partners.

If the Contractor (Principal) is a corporation, the bond should be signed in its correct corporate name by a duly authorized officer, agent, or attorney-in-fact.

There should be executed an appropriate number of counterparts of the bond corresponding to the number of counterparts of the Contract.

Performance Bond #2 (Pages 96 to 99): Use if the total contract price is more than $5 Million.

ACKNOWLEDGMENT OF PRINCIPAL IF A CORPORATION

State of _____ County of _____ ss:

On this _____ day of _____, 20 _____ before me personally came _____,
to me known, who, being by me duly sworn did depose and say that he resides at _____

_____ ; that he/she is the _____
of the corporation described in and which executed the foregoing instrument; that he/she signed his/her name to the foregoing instrument by order of the directors of said corporation as the duly authorized and binding act thereof.

_____
Notary Public or Commissioner of Deeds.

ACKNOWLEDGMENT OF PRINCIPAL IF A PARTNERSHIP

State of _____ County of _____ ss:

On this _____ day of _____, 20 _____ before me personally came _____,
to me known, who, being by me duly sworn did depose and say that he/she resides at_____

_____; that he/she is _____ partner of _____, a limited/general partnership existing under the laws of the State of _____, the partnership described in and which executed the foregoing instrument; and that he/she signed his/her name to the foregoing instrument as the duly authorized and binding act of said partnership.

_____
Notary Public or Commissioner of Deeds

ACKNOWLEDGMENT OF PRINCIPAL IF AN INDIVIDUAL

State of _____ County of _____ ss:

On this _____ day of _____, 20_____ before me personally came _____,
to me known, who, being by me duly sworn did depose and say that he/she resides at_____

_____, and that he/she is the individual whose name is subscribed to the within instrument and acknowledged to me that by his/her signature on the instrument, said individual executed the instrument.

_____
Notary Public or Commissioner of Deeds

Each executed bond should be accompanied by: (a) appropriate acknowledgments of the respective parties; (b) appropriate duly certified copy of Power of Attorney or other certificate of authority where bond is executed by agent, officer or other representative of Principal or Surety; (c) a duly certified extract from By-Laws or resolutions of Surety under which Power of Attorney or other certificate of authority of its agent, officer or representative was issued, and (d) certified copy of latest published financial statement of assets and liabilities of Surety.

* * * * * * * *

Affix Acknowledgments and Justification of Sureties.

Payment Bond (Pages 100 to 103): Use for any contract for which a Payment Bond is required.

PAYMENT BOND

KNOW ALL PERSONS BY THESE PRESENTS, That we, _____

_____

_____

_____

hereinafter referred to as the "Principal", and _____

_____

_____

_____

_____

hereinafter referred to as the "Surety" ("Sureties") are held and firmly bound to THE CITY OF NEW YORK, hereinafter referred to as the "City" or to its successors and assigns, in the penal sum of

_____

_____

_____

($_____) Dollars, lawful money of the United States, for the payment of which said sum of money well and truly to be made, we, and each of us, bind ourselves, our heirs, executors, administrators, successors and assigns, jointly and severally, firmly by these presents.

WHEREAS, the Principal is about to enter, or has entered, into a Contract in writing with the City for

_____

_____

_____

a copy of which Contract is annexed to and hereby made a part of this bond as though herein set forth in full;

NOW, THEREFORE, the conditions of this obligation are such that if the Principal, his or its representatives or assigns and other Subcontractors to whom Work under this Contract is sublet and his or their successors and assigns shall promptly pay or cause to be paid all lawful claims for

(a) Wages and compensation for labor performed and services rendered by all persons engaged in the prosecution of the Work under said Contract, and any amendment or extension thereof or addition thereto, whether such persons be agents servants or employees of the Principal or any such Subcontractor, including all persons so engaged who perform the work of laborers or mechanics at or in the vicinity of the site

of the Project regardless of any contractual relationship between the Principal or such Subcontractors, or his or their successors or assigns, on the one hand and such laborers or mechanics on the other, but not including office employees not regularly stationed at the site of the project; and

(b) Materials and supplies (whether incorporated in the permanent structure or not), as well as teams, fuels, oils, implements or machinery furnished, used or consumed by said Principal or any subcontractor at or in the vicinity of the site of the Project in the prosecution of the Work under said Contract and any amendment or extension thereof or addition thereto; then this obligation shall be void, otherwise to remain in full force and effect.

This bond is subject to the following additional conditions, limitations and agreements:

(a) The Principal and Surety (Sureties) agree that this bond shall be for the benefit of any materialmen or laborer having a just claim, as well as the City itself.

(b) All persons who have performed labor, rendered services or furnished materials and supplies, as aforesaid, shall have a direct right of action against the Principal and his, its or their successors and assigns, and the Surety (Sureties) herein, or against either or both or any of them and their successors and assigns. Such persons may sue in their own name, and may prosecute the suit to judgment and execution without the necessity of joining with any other persons as party plaintiff.

(c) The Principal and Surety (Sureties) agree that neither of them will hold the City liable for any judgment for costs of otherwise, obtained by either or both of them against a laborer or materialman in a suit brought by either a laborer or materialman under this bond for moneys allegedly due for performing work or furnishing material.

(d) The Surety (Sureties) or its successors and assigns shall not be liable for any compensation recoverable by an employee or laborer under the Workmen's Compensation Law.

(e) In no event shall the Surety (Sureties), or its successors or assigns, be liable for a greater sum than the penalty of this bond or be subject to any suit, action or proceeding hereon that is instituted by any person, firm, or corporation hereunder later than two years after the complete performance of said Contract and final settlement thereof.

The Principal, for himself and his successors and assigns, and the Surety (Sureties), for itself and its successors and assigns, do hereby expressly waive any objection that might be interposed as to the right of the City to require a bond containing the foregoing provisions, and they do hereby further expressly waive any defense which they or either of them might interpose to an action brought hereon by any person, firm or corporation, including subcontractors, materialmen and third persons, for work, labor, services, supplies or material performed rendered, or furnished as aforesaid upon the ground that there is no law authorizing the City to require the foregoing provisions to be place in this bond.

And the Surety (Sureties), for value received, for itself and its successors and assigns, hereby stipulates and agrees that the obligation of said Surety (Sureties), and its bonds shall be in no way impaired or affected by any extension of time, modification, omission, addition, or change in or of the said Contract or the work to be performed thereunder, or by any payment thereunder before the time required therein, or by any waiver of any provisions thereof, or by any assignment, subletting or other transfer thereof or of any part thereof, or of any Work to be performed, or any moneys due to become due thereunder and said Surety (Sureties) does hereby waive notice of any and all of such extensions, modifications, omissions, additions, changes, payments, waivers, assignments, subcontracts and transfers, and hereby expressly stipulates and agrees that any and all things done and omitted to be done by and in relation to assignees, Subcontractors, and other transferees shall have the same effect as to said Surety (Sureties) as though done or omitted to be done or in relation to said Principal.

Payment Bond (Pages 100 to 103): Use for any contract for which a Payment Bond is required.

IN WITNESS WHEREOF, the Principal and the Surety (Sureties) have hereunto set their hands and seals, and such of them as are corporations have caused their corporate seals to be hereunto affixed and these presents to be signed by their proper officers, this _____ day of _____, _____.

(Seal) _____(L.S.)
Principal

By:_____

(Seal) _____
Surety

By:_____

(Seal) _____
Surety

By:_____

(Seal) _____
Surety

By:_____

(Seal) _____
Surety

By:_____

If the Contractor (Principal) is a partnership, the bond should be signed by each of the individuals who are partners.

If the Contractor (Principal) is a corporation, the bond should be signed in its correct corporate name by a duly authorized officer, agent, or attorney-in-fact.

There should be executed an appropriate number of counterparts of the bond corresponding to the number of counterparts of the Contract.

Payment Bond (Pages 100 to 103): Use for any contract for which a Payment Bond is required.

ACKNOWLEDGMENT OF PRINCIPAL, IF A CORPORATION

State of _____ County of _____ ss:

On this _____ day of _____, _____, before me personally came _____ to me known, who, being by me duly sworn did depose and say that he resides at _____ _____ that he is the _____ of the corporation described in and which executed the foregoing instrument; that he knows the seal of said corporation; that one of the seals affixed to said instrument is such seal; that it was so affixed by order of the directors of said corporation, and that he signed his name thereto by like order.

_____
Notary Public or Commissioner of Deeds

ACKNOWLEDGMENT OF PRINCIPAL, IF A PARTNERSHIP

State of _____ County of _____ ss:

On this _____ day of _____, _____, before me personally appeared _____ to me known, and known to me to be one of the members of the firm of _____ _____ described in and who executed the foregoing instrument; and he acknowledged to me that he executed the same as and for the act and deed of said firm.

_____
Notary Public or Commissioner of Deeds

ACKNOWLEDGMENT OF PRINCIPAL, IF AN INDIVIDUAL

State of _____ County of _____ ss:

On this _____ day of _____, _____, before me personally appeared _____ to me known, and known to me to be the person described in and who executed the foregoing instrument; and acknowledged that he executed the same.

_____
Notary Public or Commissioner of Deeds

Each executed bond should be accompanied by: (a) appropriate acknowledgments of the respective parties; (b) appropriate duly certified copy of Power of Attorney or other certificate of authority where bond is executed by agent, officer or other representative of Principal or Surety; (c) a duly certified extract from By-Laws or resolutions of Surety under which Power of Attorney or other certificate of authority of its agent, officer or representative was issued, and (d) certified copy of latest published financial statement of assets and liabilities of Surety.

* * * * * * * *

Affix Acknowledgments and Justification of Sureties.

(NO TEXT ON THIS PAGE)

SCHEDULE OF WORKMEN, MECHANICS AND LABORERS

The following is a list of classifications for workmen, mechanics and laborers which are anticipated to be employed in the performance of work under this contract, followed by a schedule of the prevailing wage rates and supplemental benefits for all classifications as established by the Comptroller of the City of New York.

Request for interpretation or correction under Subsection A of Section No. 3 in the Information for Bidders includes all requests for clarification of the classification of trades to be employed in the performance of the work under this contract.

In the event that a trade not listed in the classification of trades required to be used at the time of the award of the contract is in fact employed during the performance of this contract, the Contractor shall be required to obtain from the agency the prevailing wage rates and supplementary benefits for the trades used and to complete the performance of this contract at the price at which the contract was awarded.

CODE	CLASSIFICATION
15 42 001	Rigger
15 42 002	Sign Erector
16 11 001	Gardener
16 11 002	Tree Pruner
16 11 003	Tree Remover
16 11 011	Asphalt Raker (Highway & Paving)
16 11 012	Tamper (Highway & Paving)
16 11 013	Curbsetter (Highway & Paving)
16 11 014	Formsetter (Highway & Paving)
16 11 015	Rammerman (Highway & Paving)
16 11 016	Laborer (Highway & Paving)
16 11 017	ALL OTHER TITLES (Highway & Paving)
16 23 001	Laborer
16 23 002	Operating Engineer (Heavy Construction-Maintenance)
16 23 003	Junior Operating Engineer
16 23 004	Junior Operating Engineer
16 23 005	Junior Operating Engineer
16 23 006	Fireman (Heavy Construction)
16 23 007	Oiler (Heavy Construction)
16 23 051	Surveyor-Heavy Construction
16 23 052	Surveyor-Heavy Construction-Instrument Man
16 23 053	Surveyor-Heavy Construction-Rodman
16 23 057	Surveyor-Land Surveying-Party Chief
16 23 058	Surveyor-Land Surveying-Instrument Man
16 23 059	Surveyor-Land Surveying-Rodman

CODE	CLASSIFICATION
16 23 061	Operating Engineer-Road & Heavy Construction
16 23 062	Operating Engineer-Paving
16 23 063	Operating Engineer-Concrete
16 23 071	Teamster-Heavy Equipment Trailer Driver
16 23 072	Teamster-Dump Truck Driver
16 23 073	Teamster-Flat Bed Trailer Driver (3-Axle)
16 23 074	Teamster-Redi-Mix (Sand and Gravel)
16 29 011	Drill Runners
17 11 001	Plumbers
17 21 001	Painter (Brush & Roller)
17 31 001	Electrician
17 41 001	Bricklayer
17 41 002	Mason Tender
17 41 004	Cement Mason
17 42 002	Metallic Lather
17 51 001	Carpenter
17 51 002	Dock Builder
17 71 001	Cement & Concrete Worker
17 91 001	Structural Iron Worker
17 95 001	Barman
17 96 021	Derrickmen & Riggers
17 99 001	Ornamental Iron Worker
17 99 002	Sandblaster
17 99 005	Pointers (Waterproofer)
17 99 011	Welders

Each classification may include trainees depending upon project staffing schedules and as required by the terms of this contract.

LABOR LAW §220 PREVAILING WAGE SCHEDULE

Workers, Laborers and Mechanics employed on a public work project must receive not less than the prevailing rate of wage and benefits for the classification of work performed by each upon such public work. Pursuant to Labor Law §220 the Comptroller of the City of New York has promulgated this schedule solely for Workers, Laborers and Mechanics engaged by private contractors on New York City public work contracts.

This schedule is a compilation of separate determinations of the prevailing rate of wage and supplements made by the Comptroller for each trade classification listed herein pursuant to New York State Labor Law section 220 (5). The source of the wage and supplement rates, whether a collective bargaining agreement, survey data or other, is listed at the end of each classification.

Agency Chief Contracting Officers should contact the Bureau of Labor Law's Classification Unit with any questions concerning trade classifications, prevailing rates or prevailing practices with respect to procurement on New York City public works contracts. Contractors are advised to review the Comptroller's Prevailing Wage Schedule before bidding on public works contracts. Contractors with questions concerning trade classifications, prevailing rates or prevailing practices with respect to public works contracts in the procurement stage must contact the contracting agency responsible for the procurement.

Any error as to compensation under the prevailing wage law or other information as to trade classification, made by the contracting agency in the contract documents or in any other communication, will not preclude a finding against the contractor of prevailing wage violation.

Any questions concerning trade classifications, prevailing rates or prevailing practices on New York City public works contracts that have already been awarded may be directed to the Bureau of Labor Law's Classification Unit by calling (212) 669-7974. All callers must have the agency name and contract registration number available when calling with questions on public works contracts. Please direct all other compliance issues to: Bureau of Labor Law, Attn: Wasyl Kinach, P.E., Office of the Comptroller, 1 Centre Street, Room 1122, New York, N.Y. 10007; Fax (212) 669-4002.

The appropriate schedule of prevailing wages and benefits must be posted at all public work sites pursuant to Labor Law §220 (3-a) (a).

This schedule is applicable to work performed during the effective period, unless otherwise noted. Changes to this schedule are published on our web site www.comptroller.nyc.gov. Contractors must pay the wages and supplements in effect when the worker, laborer, mechanic performs the work. Preliminary schedules for future one-year periods appear in the City Record on or about June 1 each succeeding year. Final schedules appear on or about July 1 in the City Record and on our web site www.comptroller.nyc.gov.

The Comptroller's Office has attempted to include all overtime, shift and night differential, Holiday, Saturday, Sunday or other premium time work. However, this schedule does not set forth every prevailing practice with respect to such rates with which employers must comply. All such practices are nevertheless part of the employer's prevailing wage obligation and contained in the collective bargaining agreements of the prevailing wage unions. These collective bargaining agreements are available for inspection by appointment. Requests for appointments may be made by calling (212) 669-4443, Monday through Friday between the hours of 9 a.m. and 5 p.m.

Prevailing rates and ratios for apprentices are attached to this schedule in the Appendix. Pursuant to Labor Law §220 (3-e), only apprentices who are individually registered in a bona fide program to which the employer contractor is a participant, registered with the New York State Department of Labor, may be employed on a public work project. Workers who are not journey persons or not registered apprentices pursuant to Labor Law §220 (3-e) may not be substituted for apprentices and must be paid as journey persons.

Public Work construction, reconstruction, demolition, excavation, rehabilitation, repair, renovation, alteration, or improvement contracts awarded pursuant to a Project Labor Agreement ("PLA") in accordance with Labor Law section 222 may have different labor standards for shift, premium and overtime work. Please refer to the PLA's pre-negotiated labor agreements for wage and benefit rates applicable to work performed outside of the regular workday. More information is available at the Mayor's Office of Contract Services (MOCS) web page at http://www.nyc.gov/html/mocs/html/vendors/pla.shtml.

All the provisions of Labor Law section 220 remain applicable to PLA work including, but not limited to, the enforcement of prevailing wage requirements by the Comptroller; however, we will enforce shift, premium, overtime and other non-standard rates as they appear in a project's pre-negotiated labor agreement.

In order to meet their obligation to provide prevailing supplemental benefits to each covered employee, employers must either:

1) Provide bona-fide benefits which cost the employer no less than the prevailing supplemental benefits rate; or
2) Supplement the employee's hourly wage by an amount no less than the prevailing supplemental benefits rate; or
3) Provide a combination of bona-fide benefits and wage supplements which cost the employer no less than the prevailing supplemental benefits rate in total.

Particular attention should be given to the supplemental benefits requirement. Although in most instances the payment or provision for supplemental benefits is for each hour worked, some classifications require the payment or provision of supplemental benefits for each hour paid. Consequently, some prevailing practices require benefits to be purchased at the overtime, shift differential, Holiday, Saturday, Sunday or other premium time rate.

Benefits are paid for ***EACH HOUR WORKED*** unless otherwise noted.

Wasyl Kinach, P.E.
Director of Classifications
Bureau of Labor Law

TABLE OF CONTENTS

CLASSIFICATION	PAGE
ASBESTOS HANDLER	5
BLASTER	5
BOILERMAKER	7
BRICKLAYER	8
CARPENTER - BUILDING COMMERCIAL	9
CARPENTER - HEAVY CONSTRUCTION WORK	10
CARPENTER - SIDEWALK SHED, SCAFFOLD AND HOIST	11
CEMENT & CONCRETE WORKER	11
CEMENT MASON	12
CORE DRILLER	13
DERRICKPERSON AND RIGGER	14
DIVER	15
DOCKBUILDER - PILE DRIVER	16
DRIVER: TRUCK (TEAMSTER)	17
ELECTRICIAN	19
ELECTRICIAN - ALARM TECHNICIAN	21
ELECTRICIAN-STREET LIGHTING WORKER	22
ELEVATOR CONSTRUCTOR	23
ELEVATOR REPAIR & MAINTENANCE	24
ENGINEER	25
ENGINEER - CITY SURVEYOR AND CONSULTANT	30
ENGINEER - FIELD (BUILDING CONSTRUCTION)	31
ENGINEER - FIELD (HEAVY CONSTRUCTION)	32
ENGINEER - FIELD (STEEL ERECTION)	33
ENGINEER - OPERATING	34
FLOOR COVERER	42
GLAZIER	42
GLAZIER - REPAIR & MAINTENANCE	43
HEAT AND FROST INSULATOR	44
HOUSE WRECKER	45
IRON WORKER - ORNAMENTAL	46
IRON WORKER - STRUCTURAL	47
LABORER	48
LANDSCAPING	48
MARBLE MECHANIC	50

MASON TENDER 51
MASON TENDER (INTERIOR DEMOLITION WORKER) 52
METALLIC LATHER 53
MILLWRIGHT 54
MOSAIC MECHANIC 55
PAINTER 56
PAINTER - SIGN 56
PAINTER - STRIPER 57
PAINTER - STRUCTURAL STEEL 58
PAPERHANGER 59
PAVER AND ROADBUILDER 60
PLASTERER 61
PLASTERER - TENDER 62
PLUMBER 63
PLUMBER (MECHNICAL EQUIPMENT AND SERVICE) 64
PLUMBER (RESIDENTIAL RATES FOR 1, 2 AND 3 FAMILY HOME CONSTRUCTION) 65
PLUMBER: PUMP & TANK 65
POINTER - WATERPROOFER, CAULKER MECHANIC (EXTERIOR BUILDING RENOVATION) 66
ROOFER 67
SANDBLASTER - STEAMBLASTER 68
SHEET METAL WORKER 68
SHEET METAL WORKER - SPECIALTY 70
SHIPYARD WORKER 70
SIGN ERECTOR 72
STEAMFITTER 72
STEAMFITTER - REFRIGERATION AND AIR CONDITIONER 74
STONE MASON - SETTER 76
TAPER 76
TELECOMMUNICATION WORKER 77
TILE FINISHER 78
TILE LAYER - SETTER 79
TIMBERPERSON 80
TUNNEL WORKER 81
WELDER 82

ASBESTOS HANDLER
(Hazardous Material; Disturbs, removes, encapsulates, repairs, or encloses friable asbestos material)

Asbestos Handler

Effective Period: 7/1/2015 - 6/30/2016
Wage Rate per Hour: $36.00
Supplemental Benefit Rate per Hour: $15.95

Overtime
Time and one half the regular rate after an 8 hour day.
Time and one half the regular rate for Sunday.
Time and one half the regular hourly rate after 40 hours in any work week.

Overtime Holidays
Time and one half the regular rate for work on the following holiday(s).
New Year's Day
Good Friday
Memorial Day
Independence Day
Labor Day
Thanksgiving Day
Christmas Day
Easter

Paid Holidays
None

(Local #78 and Local #12A)

BLASTER

Blaster

Effective Period: 7/1/2015 - 6/30/2016
Wage Rate per Hour: $45.65
Supplemental Benefit Rate per Hour: $39.69

Blaster (Hydraulic)

Effective Period: 7/1/2015 - 6/30/2016
Wage Rate per Hour: $46.44
Supplemental Benefit Rate per Hour: $39.69

Blaster - Trac Drill Hydraulic

Effective Period: 7/1/2015 - 6/30/2016
Wage Rate per Hour: $41.15
Supplemental Benefit Rate per Hour: $39.69

Blaster - Wagon: Air Trac: Quarry Bar: Drillrunners

Effective Period: 7/1/2015 - 6/30/2016
Wage Rate per Hour: $40.39
Supplemental Benefit Rate per Hour: $39.69

Blaster - Operators of Jack Hammers

Chippers: Spaders: Concrete Breakers: and all other pneumatic tools of like usage: Walk Behind Self Propelled Hydraulic Asphalt and Concrete Breakers: Hydro (Water) Demolition

Effective Period: 7/1/2015 - 6/30/2016
Wage Rate per Hour: $39.38
Supplemental Benefit Rate per Hour: $39.69

Blaster - Powder Carriers

Effective Period: 7/1/2015 - 6/30/2016
Wage Rate per Hour: $35.61
Supplemental Benefit Rate per Hour: $39.69

Blaster - Hydraulic Trac Drill Chuck Tender

Effective Period: 7/1/2015 - 6/30/2016
Wage Rate per Hour: $34.37
Supplemental Benefit Rate per Hour: $39.69

Blaster - Chuck Tender & Nipper

Effective Period: 7/1/2015 - 6/30/2016
Wage Rate per Hour: $33.64
Supplemental Benefit Rate per Hour: $39.69

Blaster - Magazine Keepers: (Watch Person)

Effective Period: 7/1/2015 - 6/30/2016
Wage Rate per Hour: $20.25
Supplemental Benefit Rate per Hour: $39.69

Overtime Description

Magazine Keepers:

Time and one half for work performed in excess of forty (40) hours per week and for work performed on Saturdays, Sundays and Holidays.

All Other Employees:
Time and one-half for the first eight hours of work on Saturday and for Make-up Time. Double time for all hours over eight Monday through Friday (except make-up hours) and for all hours worked on Sunday and Holidays.

Overtime
Double time the regular rate after an 8 hour day.
Time and one half the regular rate for Saturday.
Double time the regular rate for Sunday.

Overtime Holidays
Double time the regular rate for work on the following holiday(s).
New Year's Day
Memorial Day
Independence Day
Labor Day
Columbus Day
Presidential Election Day
Thanksgiving Day
Christmas Day

Paid Holidays
None

Shift Rates
A single shift shall be 8 hours plus an unpaid lunch, starting at 8:00 A.M (or between 6:00 A.M. and 10:00 A.M. on weekdays). When two (2) shifts are employed, each shift shall be 8 hours plus ½ hour unpaid lunch. When three (3) shifts are employed, each shift will work seven and one-half (7 ½) hours, but will be paid for eight (8) hours, since only one-half (½) hour is allowed for mealtime. When two (2) or more shifts are employed, single time will be paid for each shift. The first 8 hours of any and all work performed Monday through Friday inclusive of any off-shift shall be at the single time rate.

(Local #29)

BOILERMAKER

Boilermaker

Effective Period: 7/1/2015 - 6/30/2016
Wage Rate per Hour: $51.56
Supplemental Benefit Rate per Hour: $41.69
Supplemental Note: For time and one half overtime - $61.94 For double overtime - $82.18

Overtime Description
For Repair and Maintenance work:
Time and one half the regular rate after an 8 hour day.
Time and one half the regular rate for Saturday.

Double time the regular rate for Sunday.
For New Construction work:
Double time the regular rate after an 8 hour day.
Double time the regular time rate for Saturday.
Double time the regular rate for Sunday.

Overtime Holidays

Double time the regular rate for work on the following holiday(s).
New Year's Day
President's Day
Memorial Day
Independence Day
Columbus Day
Election Day
Veteran's Day
Thanksgiving Day
Christmas Day

Quadruple time the regular rate for work on the following holiday(s).
Labor Day

Paid Holidays

Good Friday
Day after Thanksgiving
Day before Christmas
Day before New Year's Day

Shift Rates

When shifts are required, the first shift shall work eight (8) hours at the regular straight-time hourly rate. The second shift shall work seven and one-half (7 ½) hours and receive eight hours at the regular straight time hourly rate plus twenty-five cents ($0.25) per hour. The third shift shall work seven (7) hours and receive eight hours at the regular straight time hourly rate plus fifty cents ($0.50) per hour. A thirty (30) minute lunch period shall not be considered as time worked. Work in excess of the above shall be paid overtime at the appropriate new construction work or repair work overtime wage and supplemental benefit hourly rate.

(Local #5)

BRICKLAYER

Bricklayer

Effective Period: 7/1/2015 - 6/30/2016
Wage Rate per Hour: $48.91
Supplemental Benefit Rate per Hour: $28.03

Overtime

Time and one half the regular rate after a 7 hour day.
Time and one half the regular rate for Saturday.
Double time the regular rate for Sunday.

Saturday may be used as a make-up day at straight time when a day is lost during that week to inclement weather.

Overtime Holidays

Double time the regular rate for work on the following holiday(s).
New Year's Day
Memorial Day
Independence Day
Labor Day
Thanksgiving Day
Christmas Day

Paid Holidays

None

Shift Rates

Overtime rates to be paid outside the regular scheduled work day.

(Bricklayer District Council)

CARPENTER - BUILDING COMMERCIAL

Building Commercial

Effective Period: 7/1/2015 - 6/30/2016
Wage Rate per Hour: $49.88
Supplemental Benefit Rate per Hour: $44.10

Overtime

Time and one half the regular rate after an 8 hour day.
Time and one half the regular rate for Saturday.
Double time the regular rate for Sunday.
Saturday may be used as a make-up day at straight time when a day is lost during that week to inclement weather.

Overtime Holidays

Double time the regular rate for work on the following holiday(s).
New Year's Day
Washington's Birthday
Memorial Day
Independence Day
Labor Day
Columbus Day
Presidential Election Day
Thanksgiving Day
Day after Thanksgiving
Christmas Day

Paid Holidays

None

Shift Rates
The second shift will receive one hour at the double time rate of pay for the last hour of the shift; eight hours pay for seven hours of work, nine hours pay for eight hours of work. There must be a first shift in order to work a second shift.

(Carpenters District Council)

CARPENTER - HEAVY CONSTRUCTION WORK
(Construction of Engineering Structures and Building Foundations)

Heavy Construction Work

Effective Period: 7/1/2015 - 6/30/2016
Wage Rate per Hour: $48.35
Supplemental Benefit Rate per Hour: $46.12

Overtime
Time and one half the regular rate after an 8 hour day.
Time and one half the regular rate for Saturday.
Double time the regular rate for Sunday.
Saturday may be used as a make-up day at straight time when a day is lost during that week to inclement weather.

Overtime Holidays
Double time the regular rate for work on the following holiday(s).
New Year's Day
President's Day
Memorial Day
Independence Day
Labor Day
Columbus Day
Presidential Election Day
Thanksgiving Day
Christmas Day

Paid Holidays
None

Shift Rates
Off shift work commencing between 5:00 P.M. and 11:00 P.M. shall work eight and one half hours allowing for one half hour for lunch. The wage rate shall be 113% of the straight time hourly wage rate.

(Carpenters District Council)

CARPENTER - SIDEWALK SHED, SCAFFOLD AND HOIST

Carpenter - Hod Hoist

(Assisted by Mason Tender)

Effective Period: 7/1/2015 - 6/30/2016
Wage Rate per Hour: $49.60
Supplemental Benefit Rate per Hour: $43.00

Overtime
Time and one half the regular rate after an 8 hour day.
Time and one half the regular rate for Saturday.
Double time the regular rate for Sunday.
Saturday may be used as a make-up day at straight time when a day is lost during that week to inclement weather.

Overtime Holidays
Double time the regular rate for work on the following holiday(s).
New Year's Day
President's Birthday
Memorial Day
Independence Day
Labor Day
Columbus Day
Presidential Election Day
Thanksgiving Day
Day after Thanksgiving
Christmas Day

Paid Holidays
None

Shift Rates
The second shift will receive one hour at the double time rate of pay for the last hour of the shift; eight hours pay for seven hours of work, nine hours pay for eight hours of work. There must be a first shift in order to work a second shift.

(Carpenters District Council)

CEMENT & CONCRETE WORKER

Cement & Concrete Worker

Effective Period: 7/1/2015 - 6/30/2016
Wage Rate per Hour: $42.38
Supplemental Benefit Rate per Hour: $26.17

Supplemental Note: $28.92 on Saturdays; $31.67 on Sundays & Holidays

Overtime Description
Time and one half the regular rate after 7 hour day (time and one half the regular rate after an 8 hour day when working with Dockbuilders on pile cap forms and for work below street level to the top of the foundation wall, not to exceed 2 feet or 3 feet above the sidewalk-brick shelf, when working on the foundation and structure.)

Overtime
Time and one half the regular rate for Saturday.
Double time the regular rate for Sunday.

Overtime Holidays
Double time the regular rate for work on the following holiday(s).
New Year's Day
President's Day
Good Friday
Memorial Day
Independence Day
Labor Day
Columbus Day
Presidential Election Day
Thanksgiving Day
Christmas Day

Paid Holidays
1/2 day before Christmas Day
1/2 day before New Year's Day

Shift Rates
On shift work extending over a twenty-four hour period, all shifts are paid at straight time.

(Cement Concrete Workers District Council)

CEMENT MASON

Cement Mason

Effective Period: 7/1/2015 - 6/30/2016
Wage Rate per Hour: $38.88
Supplemental Benefit Rate per Hour: $39.80
Supplemental Note: For time and one half overtime - $49.05; For double overtime - $58.30

Overtime Description
Time and one-half the regular rate after an 8 hour day, double time the regular rate after 10 hours. Time and one-half the regular rate on Saturday, double time the regular rate after 10 hours. Double time the regular rate on Sunday.

Overtime Holidays

Double time the regular rate for work on the following holiday(s).
New Year's Day
President's Day
Good Friday
Memorial Day
Independence Day
Labor Day
Columbus Day
Presidential Election Day
Thanksgiving Day
Christmas Day

Paid Holidays

Any worker who reports to work on Christmas Eve or New Year's Eve pursuant to his employer's instruction shall be entitled to three (3) hours afternoon pay without working.

Shift Rates

For an off shift day, (work at times other than the regular 7:00 A.M. to 3:30 P.M. work day) a cement mason shall be paid at the regular hourly rate plus a 25% per hour differential. Four Days a week at Ten (10)hour day.

(Local #780)

CORE DRILLER

Core Driller

Effective Period: 7/1/2015 - 6/30/2016
Wage Rate per Hour: $36.82
Supplemental Benefit Rate per Hour: $22.69

Core Driller Helper

Effective Period: 7/1/2015 - 6/30/2016
Wage Rate per Hour: $29.44
Supplemental Benefit Rate per Hour: $22.69

Core Driller Helper(Third year in the industry)

Effective Period: 7/1/2015 - 6/30/2016
Wage Rate per Hour: $26.50
Supplemental Benefit Rate per Hour: $22.69

Core Driller Helper (Second year in the industry)

Effective Period: 7/1/2015 - 6/30/2016
Wage Rate per Hour: $23.55
Supplemental Benefit Rate per Hour: $22.69

Core Driller Helper (First year in the industry)

Effective Period: 7/1/2015 - 6/30/2016
Wage Rate per Hour: $20.61
Supplemental Benefit Rate per Hour: $22.69

Overtime Description
Time and one half the regular rate for work on a holiday plus Holiday pay when worked.

Overtime
Time and one half the regular rate after an 8 hour day.
Time and one half the regular rate for Saturday.
Double time the regular rate for Sunday.
Time and one half the regular rate for work on the following holiday(s).

Paid Holidays
New Year's Day
Memorial Day
Independence Day
Labor Day
Thanksgiving Day
Christmas Day

Shift Rates
The shift day shall be the continuous eight and one-half (8½) hours from 6:00 A.M. to 2:30 P.M. and from 2:30 P.M. to 11:00 P.M., including one-half (½) hour of employees regular rate of pay for lunch. When two (2) or more shifts are employed, single time shall be paid for each shift, but those employees employed on a shift other than from 8:00 A.M. to 5:00 P.M. shall, in addition, receive seventy-five cents ($0.75) per hour differential for each hour worked. When three (3) shifts are needed, each shift shall work seven and one-half (7 ½) hours paid for eight (8) hours of labor and be permitted one-half (½) hour for mealtime.

(Carpenters District Council)

DERRICKPERSON AND RIGGER

Derrick Person & Rigger

Effective Period: 7/1/2015 - 6/30/2016
Wage Rate per Hour: $42.25
Supplemental Benefit Rate per Hour: $47.81
Supplemental Note: The above supplemental rate applies for work performed in Manhattan, Bronx, Brooklyn and Queens. $49.23 - For work performed in Staten Island.

Overtime Description
The first two hours of overtime on weekdays and the first seven hours of work on Saturdays are paid at time and one half for wages and supplemental benefits. All additional overtimes is paid at double time for wages and supplemental benefits. Deduct $1.42 from the Staten Island hourly benefits rate before computing overtime.

Overtime
Double time the regular rate for Sunday.

Overtime Holidays
Double time the regular rate for work on the following holiday(s).
New Year's Day
Washington's Birthday
Good Friday
Memorial Day
Independence Day
Labor Day
Thanksgiving Day
Christmas Day

Paid Holidays
1/2 day on Christmas Eve if work is performed in the A.M.

(Local #197)

DIVER

Diver (Marine)

Effective Period: 7/1/2015 - 6/30/2016
Wage Rate per Hour: $61.30
Supplemental Benefit Rate per Hour: $46.12

Diver Tender (Marine)

Effective Period: 7/1/2015 - 6/30/2016
Wage Rate per Hour: $43.45
Supplemental Benefit Rate per Hour: $46.12

Overtime
Time and one half the regular rate after an 8 hour day.
Time and one half the regular rate for Saturday.
Double time the regular rate for Sunday.
Saturday may be used as a make-up day at straight time when a day is lost during that week to inclement weather.

Overtime Holidays
Double time the regular rate for work on the following holiday(s).
New Year's Day
President's Day
Memorial Day
Independence Day
Labor Day
Columbus Day

Presidential Election Day
Thanksgiving Day
Christmas Day

Paid Holidays
None

Shift Rates
When three shifts are utilized each shift shall work seven and one half-hours (7 1/2 hours) and paid for 8 hours, allowing for one half hour for lunch.

(Carpenters District Council)

DOCKBUILDER - PILE DRIVER

Dockbuilder - Pile Driver

Effective Period: 7/1/2015 - 6/30/2016
Wage Rate per Hour: $48.35
Supplemental Benefit Rate per Hour: $46.12

Overtime
Time and one half the regular rate after an 8 hour day.
Time and one half the regular rate for Saturday.
Double time the regular rate for Sunday.
Saturday may be used as a make-up day at straight time when a day is lost during that week to inclement weather.

Overtime Holidays
Double time the regular rate for work on the following holiday(s).
New Year's Day
President's Day
Memorial Day
Independence Day
Labor Day
Columbus Day
Presidential Election Day
Thanksgiving Day
Christmas Day

Paid Holidays
None

Shift Rates
Off shift work commencing between 5:00 P.M. and 11:00 P.M. shall work eight and one half hours allowing for one half hour for lunch. The wage rate shall be 113% of the straight time hourly wage rate.

(Carpenters District Council)

DRIVER: TRUCK (TEAMSTER)

Driver - Dump Truck

Effective Period: 7/1/2015 - 6/30/2016
Wage Rate per Hour: $38.86
Supplemental Benefit Rate per Hour: $40.44
Supplemental Note: Over 40 hours worked: time and one half rate $16.94, double time rate $22.59

Driver - Tractor Trailer

Effective Period: 7/1/2015 - 6/30/2016
Wage Rate per Hour: $38.88
Supplemental Benefit Rate per Hour: $41.70
Supplemental Note: For over 40 hours worked: at time and one half - $15.90; at double time - $21.21

Driver - Euclid & Turnapull Operator

Effective Period: 7/1/2015 - 6/30/2016
Wage Rate per Hour: $39.44
Supplemental Benefit Rate per Hour: $41.70
Supplemental Note: Over 40 hours worked: time and one half rate $15.90, double time rate $21.21

Overtime Description
For Paid Holidays: Holiday pay for all holidays shall be prorated based two hours per day for each day worked in the holiday week, not to exceed 8 hours of holiday pay. For Thanksgiving week, the prorated share shall be 5 1/3 hours of holiday pay for each day worked in Thanksgiving week.

Overtime
Time and one half the regular rate after an 8 hour day.
Time and one half the regular rate for Saturday.
Double time the regular rate for Sunday.

Overtime Holidays
Double time the regular rate for work on the following holiday(s).
New Year's Day
President's Day
Memorial Day
Independence Day
Labor Day
Columbus Day
Veteran's Day
Thanksgiving Day
Day after Thanksgiving
Christmas Day

Paid Holidays
New Year's Day

President's Day
Memorial Day
Independence Day
Labor Day
Columbus Day
Veteran's Day
Thanksgiving Day
Day after Thanksgiving
Christmas Day

Driver Redi-Mix (Sand & Gravel)

Effective Period: 7/1/2015 - 6/30/2016
Wage Rate per Hour: $36.30
Supplemental Benefit Rate per Hour: $40.02
Supplemental Note: Over 40 hours worked: time and one half rate $13.90, double time rate $18.53

Overtime Description
For Paid Holidays: Employees working two (2) days in the calendar week in which the holiday falls are to paid for these holidays, provided they shape each remaining workday during that calendar week.

Overtime
Time and one half the regular rate after an 8 hour day.
Time and one half the regular rate for Saturday.
Double time the regular rate for Sunday.

Overtime Holidays
Double time the regular rate for work on the following holiday(s).
President's Day
Columbus Day
Veteran's Day

Triple time the regular rate for work on the following holiday(s).
New Year's Day
Memorial Day
Independence Day
Labor Day
Thanksgiving Day
Christmas Day

Paid Holidays
New Year's Day
President's Day
Memorial Day
Independence Day
Labor Day
Columbus Day
Election Day
Thanksgiving Day
Christmas Day

(Local #282)

ELECTRICIAN

(Including all low voltage cabling carrying data; video; and voice in combination with data and or video.)

Electrician "A" (Regular Day)

Effective Period: 7/1/2015 - 6/30/2016
Wage Rate per Hour: $54.00
Supplemental Benefit Rate per Hour: $50.03

Electrician "A" (Regular Day Overtime)

Effective Period: 7/1/2015 - 6/30/2016
Wage Rate per Hour: $81.00
Supplemental Benefit Rate per Hour: $53.41

Electrician "A" (Day Shift)

Effective Period: 7/1/2015 - 6/30/2016
Wage Rate per Hour: $54.00
Supplemental Benefit Rate per Hour: $50.03

Electrician "A" (Day Shift Overtime After 8 hours)

Effective Period: 7/1/2015 - 6/30/2016
Wage Rate per Hour: $81.00
Supplemental Benefit Rate per Hour: $53.41

Electrician "A" (Swing Shift)

Effective Period: 7/1/2015 - 6/30/2016
Wage Rate per Hour: $63.36
Supplemental Benefit Rate per Hour: $56.94

Electrician "A" (Swing Shift Overtime After 7.5 hours)

Effective Period: 7/1/2015 - 6/30/2016
Wage Rate per Hour: $95.04
Supplemental Benefit Rate per Hour: $60.91

Electrician "A" (Graveyard Shift)

Effective Period: 7/1/2015 - 6/30/2016
Wage Rate per Hour: $70.97
Supplemental Benefit Rate per Hour: $62.78

Electrician "A" (Graveyard Shift Overtime After 7 hours)

Effective Period: 7/1/2015 - 6/30/2016
Wage Rate per Hour: $106.46
Supplemental Benefit Rate per Hour: $67.23

Overtime
Time and one half the regular rate after a 7 hour day.
Time and one half the regular rate for Saturday.
Time and one half the regular rate for Sunday.

Overtime Holidays
Time and one half the regular rate for work on a holiday.
New Year's Day
Martin Luther King Jr. Day
President's Day
Memorial Day
Independence Day
Labor Day
Columbus Day
Veteran's Day
Thanksgiving Day
Day after Thanksgiving
Christmas Day

Paid Holidays
None

Shift Rates
When so elected by the Employer, one or more shifts of at least five days duration may be scheduled as follows: Day Shift: 8:00 am to 4:30 pm, Swing Shift 4:30 pm to 12:30 am, Graveyard Shift: 12:30 am to 8:00 am.

For multiple shifts of temporary light and/or power, the temporary light and/or power employee shall be paid for 8 hours at the straight time rate. For three or less workers performing 8 hours temporary light and/or power the supplemental benefit rate is $23.63. Effective 5/13/2015 - $24.39.

Electrician "M" (First 8 hours)

"M" rated work shall be defined as jobbing: electrical work of limited duration and scope, also consisting of repairs and/or replacement of electrical and tele-data equipment. Includes all work necessary to retrofit, service, maintain and repair all kinds of lighting fixtures and local lighting controls and washing and cleaning of foregoing fixtures.

Effective Period: 7/1/2015 - 6/30/2016
Wage Rate per Hour: $27.50

Supplemental Benefit Rate per Hour: $20.82
First and Second Year "M" Wage Rate Per Hour: $23.00
First and Second Year "M" Supplemental Rate: $18.56

Electrician "M" (Overtime After First 8 hours)

"M" rated work shall be defined as jobbing: electrical work of limited duration and scope, also consisting of repairs and/or replacement of electrical and tele-data equipment. Includes all work necessary to retrofit, service, maintain and repair all kinds of lighting fixtures and local lighting controls and washing and cleaning of foregoing fixtures.

Effective Period: 7/1/2015 - 6/30/2016
Wage Rate per Hour: $41.25
Supplemental Benefit Rate per Hour: $22.54
First and Second Year "M" Wage Rate Per Hour: $34.50
First and Second Year "M" Supplemental Rate: $20.00

Overtime
Time and one half the regular rate after an 8 hour day.
Time and one half the regular rate for Saturday.
Time and one half the regular rate for Sunday.

Overtime Holidays
Time and one half the regular rate for work on the following holiday(s).
New Year's Day
Martin Luther King Jr. Day
President's Day
Memorial Day
Independence Day
Labor Day
Columbus Day
Veteran's Day
Thanksgiving Day
Day after Thanksgiving
Christmas Day

Paid Holidays
None

(Local #3)

ELECTRICIAN - ALARM TECHNICIAN
(Scope of Work - Inspect, test, repair, and replace defective, malfunctioning, or broken devices, components and controls of Fire, Burglar and Security Systems)

Alarm Technician

Effective Period: 7/1/2015 - 6/30/2016
Wage Rate per Hour: $30.40
Supplemental Benefit Rate per Hour: $13.90
Supplemental Note: $12.40 only after 8 hours worked in a day

Overtime Description

Time and one half the regular rate for work on the following holidays: Columbus Day, Veterans Day, Day after Thanksgiving.
Double time the regular rate for work on the following holidays: New Year's day, Martin Luther King Jr. Day, President's Day, Memorial Day, Independence Day, Labor Day, Thanksgiving Day, Christmas Day.

Overtime

Time and one half the regular rate after an 8 hour day.
Time and one half the regular rate for Saturday.
Double time the regular rate for Sunday.

Paid Holidays

New Year's Day
Martin Luther King Jr. Day
President's Day
Memorial Day
Independence Day
Labor Day
Columbus Day
Veteran's Day
Thanksgiving Day
Day after Thanksgiving
Christmas Day

Shift Rates

Night Differential is based upon a ten percent (10%) differential between the hours of 4:00 P.M. and 12:30 A.M. and a fifteen percent (15%) differential for the hours 12:00 A.M. to 8:00 A.M.

Vacation

At least 1 year of employment.....ten (10) days
5 years or more of employment.....fifteen (15) days
10 years of employment.....twenty (20) days
Plus one Personal Day per year

Sick Days:
One day per Year

(Local #3)

ELECTRICIAN-STREET LIGHTING WORKER

Electrician - Electro Pole Electrician

Effective Period: 7/1/2015 - 6/30/2016

Wage Rate per Hour: $54.00
Supplemental Benefit Rate per Hour: $51.86

Electrician - Electro Pole Foundation Installer

Effective Period: 7/1/2015 - 6/30/2016
Wage Rate per Hour: $40.93
Supplemental Benefit Rate per Hour: $39.46

Electrician - Electro Pole Maintainer

Effective Period: 7/1/2015 - 6/30/2016
Wage Rate per Hour: $35.05
Supplemental Benefit Rate per Hour: $35.51

Overtime Description
Electrician - Electro Pole Electrician: Time and one half the regular rate after a 7 hour day and after 5 consecutive days worked per week.
Electrician - Electro Pole Foundation Installer: Time and one half the regular rate after 8 hours within a 24 hour period and Saturday and Sunday.
Electrician - Electro Pole Maintainer: Time and one half the regular rate after a 7 hour day and after 5 consecutive days worked per week. Saturdays and Sundays may be used as a make-up day at straight time when a day is lost during the week to inclement weather.

Overtime Holidays
Time and one half the regular rate for work on the following holiday(s).
New Year's Day
Martin Luther King Jr. Day
President's Day
Memorial Day
Independence Day
Labor Day
Columbus Day
Veteran's Day
Thanksgiving Day
Day after Thanksgiving
Christmas Day

Paid Holidays
None

(Local #3)

ELEVATOR CONSTRUCTOR

Elevator Constructor

Effective Period: 7/1/2015 - 6/30/2016

Wage Rate per Hour: $59.55
Supplemental Benefit Rate per Hour: $31.07

Overtime Description
For New Construction: work performed after 7 or 8 hour day, Saturday, Sunday or between 4:30pm and 7:00am shall be paid at double time rate.

Existing buildings: work performed after an 8 hour day, Saturday, Sunday or between 5:30pm and 7:00 am shall be paid time and one half.

Overtime
Double time the regular rate for work on the following holiday(s).

Paid Holidays
New Year's Day
President's Day
Good Friday
Memorial Day
Independence Day
Labor Day
Columbus Day
Veteran's Day
Thanksgiving Day
Day after Thanksgiving
Christmas Day

Vacation
Employer contributes 8% of regular basic hourly rate as vacation pay for employees with more than 15 years of service, and 6% for employees with 5 to 15 years of service, and 4% for employees with less than 5 years of service.

(Local #1)

ELEVATOR REPAIR & MAINTENANCE

Elevator Service/Modernization Mechanic

Effective Period: 7/1/2015 - 6/30/2016
Wage Rate per Hour: $46.92
Supplemental Benefit Rate per Hour: $30.91

Overtime Description
For Scheduled Service Work: Double time - work scheduled in advance by two or more workers performed on Sundays, Holidays, and between midnight and 7:00am.

Overtime
Time and one half the regular rate after an 8 hour day.
Time and one half the regular rate for Saturday.
Time and one half the regular rate for Sunday.
Time and one half the regular rate for work on a holiday plus the day's pay.

Paid Holidays

New Year's Day
President's Day
Good Friday
Memorial Day
Independence Day
Labor Day
Columbus Day
Veteran's Day
Thanksgiving Day
Day after Thanksgiving
Christmas Day

Shift Rates

Afternoon shift - regularly hourly rate plus a (15%) fifteen percent differential. Graveyard shift - time and one half the regular rate.

Vacation

Employer contributes 8% of regular basic hourly rate as vacation pay for employees with more than 15 years of service, and 6% for employees with 5 to 15 years of service, and 4% for employees with less than 5 years of service.

(Local #1)

ENGINEER

Engineer - Heavy Construction Operating Engineer I

Cherrypickers 20 tons and over and Loaders (rubber tired and/or tractor type with a manufacturer's minimum rated capacity of six cubic yards and over).

Effective Period: 7/1/2015 - 6/30/2016
Wage Rate per Hour: $62.93
Supplemental Benefit Rate per Hour: $32.89
Supplemental Note: $59.13 on overtime
Shift Wage Rate: $100.69

Engineer - Heavy Construction Operating Engineer II

Backhoes, Basin Machines, Groover, Mechanical Sweepers, Bobcat, Boom Truck, Barrier Transport (Barrier Mover) & machines of similar nature. Operation of Churn Drills and machines of a similar nature, Stetco Silent Hoist and machines of similar nature, Vac-Alls, Meyers Machines, John Beam and machines of a similar nature, Ross Carriers and Travel Lifts and machines of a similar nature, Bulldozers, Scrapers and Turn-a-Pulls: Tugger Hoists (Used exclusively for handling excavated material); Tractors with attachments, Hyster and Roustabout Cranes, Cherrypickers. Austin Western, Grove and machines of a similar nature, Scoopmobiles, Monorails, Conveyors, Trenchers: Loaders-Rubber Tired and Tractor: Barber Greene and Eimco Loaders and Eimco Backhoes; Mighty Midget and similar breakers and Tampers, Curb and Gutter Pavers and Motor Patrol, Motor Graders and all machines of a similar nature. Locomotives 10 Tons or under. Mini-Max, Break-Tech and machines of a similar nature; Milling machines, robotic and demolition machines and machines of a similar

nature, shot blaster, skid steer machines and machines of a similar nature including bobcat, pile rig rubber-tired excavator (37,000 lbs. and under), 2 man auger.

Effective Period: 7/1/2015 - 6/30/2016
Wage Rate per Hour: $61.07
Supplemental Benefit Rate per Hour: $32.89
Supplemental Note: $59.13 on overtime
Shift Wage Rate: $97.71

Engineer - Heavy Construction Operating Engineer III

Minor Equipment such as Tractors, Post Hole Diggers, Ditch Witch (Walk Behind), Road Finishing Machines, Rollers five tons and under, Tugger Hoists, Dual Purpose Trucks, Fork Lifts, and Dempsey Dumpers, Fireperson.

Effective Period: 7/1/2015 - 6/30/2016
Wage Rate per Hour: $57.96
Supplemental Benefit Rate per Hour: $32.89
Supplemental Note: $59.13 on overtime
Shift Wage Rate: $92.74

Engineer - Heavy Construction Maintenance Engineer I

Installing, Repairing, Maintaining, Dismantling and Manning of all equipment including Steel Cutting, Bending and Heat Sealing Machines, Mechanical Heaters, Grout Pumps, Bentonite Pumps & Plants, Screening Machines, Fusion Coupling Machines, Tunnel Boring Machines Moles and Machines of a similar nature, Power Packs, Mechanical Hydraulic Jacks; all drill rigs including but not limited to Churn, Rotary Caisson, Raised Bore & Drills of a similar nature; Personnel, Inspection & Safety Boats or any boats used to perform functions of same, Mine Hoists, Whirlies, all Climbing Cranes, all Tower Cranes, including but not limited to Truck Mounted and Crawler Type and machines of similar nature; Maintaining Hydraulic Drills and machines of a similar nature; Well Point System-Installation and dismantling; Burning, Welding, all Pumps regardless of size and/or motor power, except River Cofferdam Pumps and Wells Point Pumps; Motorized Buggies (three or more); equipment used in the cleaning and televising of sewers, but not limited to jet-rodder/vacuum truck, vacall/vactor, closed circuit television inspection equipment; high powered water pumps, jet pumps; screed machines and concrete finishing machines of a similar nature; vermeers.

Effective Period: 7/1/2015 - 6/30/2016
Wage Rate per Hour: $60.79
Supplemental Benefit Rate per Hour: $32.89
Supplemental Note: $59.13 on overtime
Shift Wage Rate: $97.26

Engineer - Heavy Construction Maintenance Engineer II

On Base Mounted Tower Cranes

Effective Period: 7/1/2015 - 6/30/2016
Wage Rate per Hour: $79.67
Supplemental Benefit Rate per Hour: $32.89
Supplemental Note: $59.13 on overtime
Shift Wage Rate: $127.47

Engineer - Heavy Construction Maintenance Engineer III

On Generators, Light Towers

Effective Period: 7/1/2015 - 6/30/2016
Wage Rate per Hour: $40.32
Supplemental Benefit Rate per Hour: $32.89
Supplemental Note: $59.13 on overtime
Shift Wage Rate: $64.51

Engineer - Heavy Construction Maintenance Engineer IV

On Pumps and Mixers including mud sucking

Effective Period: 7/1/2015 - 6/30/2016
Wage Rate per Hour: $41.36
Supplemental Benefit Rate per Hour: $32.89
Supplemental Note: $59.13 on overtime
Shift Wage Rate: $66.17

Engineer - Heavy Construction Oilers I

Gradalls, Cold Planer Grader, Concrete Pumps, Driving Truck Cranes, Driving and Operating Fuel and Grease Trucks.

Effective Period: 7/1/2015 - 6/30/2016
Wage Rate per Hour: $54.87
Supplemental Benefit Rate per Hour: $32.89
Supplemental Note: $59.13 on overtime
Shift Wage Rate: $87.79

Engineer - Heavy Construction Oilers II

All gasoline, electric, diesel or air operated Shovels, Draglines, Backhoes, Keystones, Pavers, Gunite Machines, Battery of Compressors, Crawler Cranes, two-person Trenching Machines.

Effective Period: 7/1/2015 - 6/30/2016
Wage Rate per Hour: $38.13
Supplemental Benefit Rate per Hour: $32.89
Supplemental Note: $59.13 on overtime
Shift Wage Rate: $61.01

Engineer - Steel Erection Maintenance Engineers

Derrick, Travelers, Tower, Crawler Tower and Climbing Cranes

Effective Period: 7/1/2015 - 6/30/2016
Wage Rate per Hour: $58.66
Supplemental Benefit Rate per Hour: $32.89
Supplemental Note: $59.13 on overtime

Shift Wage Rate: $93.86

Engineer - Steel Erection Oiler I

On a Truck Crane

Effective Period: 7/1/2015 - 6/30/2016
Wage Rate per Hour: $54.94
Supplemental Benefit Rate per Hour: $32.89
Supplemental Note: $59.13 on overtime
Shift Wage Rate: $87.90

Engineer - Steel Erection Oiler II

On a Crawler Crane

Effective Period: 7/1/2015 - 6/30/2016
Wage Rate per Hour: $41.99
Supplemental Benefit Rate per Hour: $32.89
Supplemental Note: $59.13 on overtime
Shift Wage Rate: $67.18

Overtime Description
On jobs of more than one shift, if the next shift employee fails to report for work through any cause over which the employer has no control, the employee on duty who works the next shift continues to work at the single time rate.

Overtime
Double time the regular rate after an 8 hour day.
Double time the regular time rate for Saturday.
Double time the regular rate for Sunday.
Double time the regular rate for work on the following holiday(s).

Paid Holidays
New Year's Day
Lincoln's Birthday
President's Day
Memorial Day
Independence Day
Labor Day
Columbus Day
Veteran's Day
Thanksgiving Day
Day after Thanksgiving
Christmas Day
Employees must work at least one day in the payroll week in which the holiday occurs to receive the paid holiday

---

Engineer - Building Work Maintenance Engineers I

Installing, repairing, maintaining, dismantling (of all equipment including: Steel Cutting and Bending Machines, Mechanical Heaters, Mine Hoists, Climbing Cranes, Tower Cranes, Linden Peine, Lorain, Liebherr, Mannes, or machines of a similar nature, Well Point Systems, Deep Well Pumps, Concrete Mixers with loading Device, Concrete Plants, Motor Generators when used for temporary power and lights), skid steer machines of a similar nature including bobcat.

Effective Period: 7/1/2015 - 6/30/2016
Wage Rate per Hour: $55.71
Supplemental Benefit Rate per Hour: $32.89
Supplemental Note: $59.13 on overtime

Engineer - Building Work Maintenance Engineers II

On Pumps, Generators, Mixers and Heaters

Effective Period: 7/1/2015 - 6/30/2016
Wage Rate per Hour: $43.41
Supplemental Benefit Rate per Hour: $32.89
Supplemental Note: $59.13 on overtime

Engineer - Building Work Oilers I

All gasoline, electric, diesel or air operated Gradealls: Concrete Pumps, Overhead Cranes in Power Houses: Their duties shall be to assist the Engineer in oiling, greasing and repairing of all machines; Driving Truck Cranes: Driving and Operating Fuel and Grease Trucks, Cherrypickers (hydraulic cranes) over 70,000 GVW, and machines of a similar nature.

Effective Period: 7/1/2015 - 6/30/2016
Wage Rate per Hour: $52.99
Supplemental Benefit Rate per Hour: $32.89
Supplemental Note: $59.13 on overtime

Engineer - Building Work Oilers II

Oilers on Crawler Cranes, Backhoes, Trenching Machines, Gunite Machines, Compressors (three or more in Battery).

Effective Period: 7/1/2015 - 6/30/2016
Wage Rate per Hour: $39.51
Supplemental Benefit Rate per Hour: $32.89
Supplemental Note: $59.13 on overtime

Overtime Description

On jobs of more than one shift, if an Employee fails to report for work through any cause over which the Employer has no control, the Employee on duty will continue to work at the rate of single time.

Overtime

Double time the regular rate after an 8 hour day.
Double time the regular time rate for Saturday.
Double time the regular rate for Sunday.
Double time the regular rate for work on the following holiday(s).

Paid Holidays

New Year's Day
Lincoln's Birthday
President's Day
Memorial Day
Independence Day
Labor Day
Columbus Day
Veteran's Day
Thanksgiving Day
Christmas Day
Employees must work at least one day in the payroll week in which the holiday occurs to receive the paid holiday

Shift Rates

Off Shift: double time the regular hourly rate.

(Local #15)

ENGINEER - CITY SURVEYOR AND CONSULTANT

Party Chief

Effective Period: 7/1/2015 - 6/30/2016
Wage Rate per Hour: $36.01
Supplemental Benefit Rate per Hour: $18.45
Supplemental Note: Overtime Benefit Rate - $25.23 per hour (time & one half) $32.00 per hour (double time).

Instrument Person

Effective Period: 7/1/2015 - 6/30/2016
Wage Rate per Hour: $29.75
Supplemental Benefit Rate per Hour: $18.45
Supplemental Note: Overtime Benefit Rate - $25.23 per hour (time & one half) $32.00 per hour (double time).

Rodperson

Effective Period: 7/1/2015 - 6/30/2016
Wage Rate per Hour: $25.80
Supplemental Benefit Rate per Hour: $18.45
Supplemental Note: Overtime Benefit Rate - $25.23 per hour (time & one half) $32.00 per hour (double time).

Overtime Description

Time and one half the regular rate after an 8 hour day, Time and one half the regular rate for Saturday for the first eight hours worked, Double time the regular time rate for Saturday for work performed in excess of eight hours, Double time the regular rate for Sunday and Double time the regular rate for work on a holiday.

Paid Holidays

New Year's Day
Lincoln's Birthday
President's Day
Memorial Day
Independence Day
Labor Day
Columbus Day
Veteran's Day
Thanksgiving Day
Day after Thanksgiving
Christmas Day
Employees must work at least one day in the payroll week in which the holiday occurs to receive the paid holiday

(Operating Engineer Local #15-D)

ENGINEER - FIELD (BUILDING CONSTRUCTION)
(Construction of Building Projects, Concrete Superstructures, etc.)

Field Engineer - BC Party Chief

Effective Period: 7/1/2015 - 6/30/2016
Wage Rate per Hour: $59.02
Supplemental Benefit Rate per Hour: $31.51
Supplemental Note: Overtime Benefit Rate - $43.94 per hour (time & one half) $56.37 per hour (double time).

Field Engineer - BC Instrument Person

Effective Period: 7/1/2015 - 6/30/2016
Wage Rate per Hour: $45.84
Supplemental Benefit Rate per Hour: $31.51
Supplemental Note: Overtime Benefit Rate - $43.94 per hour (time & one half) $56.37 per hour (double time).

Field Engineer - BC Rodperson

Effective Period: 7/1/2015 - 6/30/2016
Wage Rate per Hour: $29.60
Supplemental Benefit Rate per Hour: $31.51
Supplemental Note: Overtime Benefit Rate - $43.94 per hour (time & one half) $56.37 per hour (double time).

Overtime Description
Time and one half the regular rate after a 7 hour work and time and one half the regular rate for Saturday for the first seven hours worked, Double time the regular time rate for Saturday for work performed in excess of seven hours, Double time the regular rate for Sunday and Double time the regular rate for work on a holiday.

Paid Holidays
New Year's Day
President's Day

Good Friday
Memorial Day
Independence Day
Labor Day
Columbus Day
Veteran's Day
Thanksgiving Day
Christmas Day
Employees must work at least one day in the payroll week in which the holiday occurs to receive the paid holiday

(Operating Engineer Local #15-D)

ENGINEER - FIELD (HEAVY CONSTRUCTION)
(Construction of Roads, Tunnels, Bridges, Sewers, Building Foundations, Engineering Structures etc.)

Field Engineer - HC Party Chief

Effective Period: 7/1/2015 - 6/30/2016
Wage Rate per Hour: $64.52
Supplemental Benefit Rate per Hour: $31.51
Supplemental Note: Overtime benefit rate - $43.94 per hour (time & one half), $56.37 per hour (double time).

Field Engineer - HC Instrument Person

Effective Period: 7/1/2015 - 6/30/2016
Wage Rate per Hour: $47.41
Supplemental Benefit Rate per Hour: $31.51
Supplemental Note: Overtime benefit rate - $43.94 per hour (time & one half), $56.37 per hour (double time).

Field Engineer - HC Rodperson

Effective Period: 7/1/2015 - 6/30/2016
Wage Rate per Hour: $39.80
Supplemental Benefit Rate per Hour: $31.51
Supplemental Note: Overtime benefit rate - $43.94 per hour (time & one half), $56.37 per hour (double time).

Overtime Description
Time and one half the regular rate after an 8 hour day, Time and one half the regular rate for Saturday for the first eight hours worked, Double time the regular time rate for Saturday for work performed in excess of eight hours, Double time the regular rate for Sunday and Double time the regular rate for work on a holiday.

Paid Holidays
New Year's Day
Lincoln's Birthday
President's Day
Memorial Day

Independence Day
Labor Day
Columbus Day
Veteran's Day
Thanksgiving Day
Christmas Day
Employees must work at least one day in the payroll week in which the holiday occurs to receive the paid holiday

(Operating Engineer Local #15-D)

ENGINEER - FIELD (STEEL ERECTION)

Field Engineer - Steel Erection Party Chief

Effective Period: 7/1/2015 - 6/30/2016
Wage Rate per Hour: $60.38
Supplemental Benefit Rate per Hour: $31.51
Supplemental Note: Overtime benefit rate - $43.94 per hour (time & one half), $56.37 per hour (double time).

Field Engineer - Steel Erection Instrument Person

Effective Period: 7/1/2015 - 6/30/2016
Wage Rate per Hour: $47.05
Supplemental Benefit Rate per Hour: $31.51
Supplemental Note: Overtime benefit rate - $43.94 per hour (time & one half), $56.37 per hour (double time).

Field Engineer - Steel Erection Rodperson

Effective Period: 7/1/2015 - 6/30/2016
Wage Rate per Hour: $31.52
Supplemental Benefit Rate per Hour: $31.51
Supplemental Note: Overtime benefit rate - $43.94 per hour (time & one half), $56.37 per hour (double time).

Overtime Description
Time and one half the regular rate for Saturday for the first eight hours worked.
Double time the regular rate for Saturday for work performed in excess of eight hours.

Overtime
Time and one half the regular rate after an 8 hour day.
Double time the regular rate for Sunday.
Double time the regular rate for work on the following holiday(s).

Paid Holidays
New Year's Day
Lincoln's Birthday
President's Day
Memorial Day
Independence Day

Labor Day
Columbus Day
Veteran's Day
Thanksgiving Day
Christmas Day
Employees must work at least one day in the payroll week in which the holiday occurs to receive the paid holiday

(Operating Engineer Local #15-D)

ENGINEER - OPERATING

Operating Engineer - Road & Heavy Construction I

Back Filling Machines, Cranes, Mucking Machines and Dual Drum Paver.

Effective Period: 7/1/2015 - 6/30/2016
Wage Rate per Hour: $71.75
Supplemental Benefit Rate per Hour: $30.40
Supplemental Note: $55.10 overtime hours
Shift Wage Rate: $114.80

Operating Engineer - Road & Heavy Construction II

Backhoes, Power Shovels, Hydraulic Clam Shells, Steel Erection, Moles and machines of a similar nature.

Effective Period: 7/1/2015 - 6/30/2016
Wage Rate per Hour: $74.29
Supplemental Benefit Rate per Hour: $30.40
Supplemental Note: $55.10 overtime hours
Shift Wage Rate: $118.86

Operating Engineer - Road & Heavy Construction III

Mine Hoists, Cranes, etc. (Used as Mine Hoists)

Effective Period: 7/1/2015 - 6/30/2016
Wage Rate per Hour: $76.67
Supplemental Benefit Rate per Hour: $30.40
Supplemental Note: $55.10 overtime hours
Shift Wage Rate: $122.67

Operating Engineer - Road & Heavy Construction IV

Gradealls, Keystones, Cranes on land or water (with digging buckets), Bridge Cranes, Vermeer Cutter and machines of a similar nature, Trenching Machines.

Effective Period: 7/1/2015 - 6/30/2016
Wage Rate per Hour: $74.84

Supplemental Benefit Rate per Hour: $30.40
Supplemental Note: $55.10 overtime hours
Shift Wage Rate: $119.74

Operating Engineer - Road & Heavy Construction V

Pile Drivers & Rigs (employing Dock Builder foreperson): Derrick Boats, Tunnel Shovels.

Effective Period: 7/1/2015 - 6/30/2016
Wage Rate per Hour: $73.36
Supplemental Benefit Rate per Hour: $30.40
Supplemental Note: $55.10 overtime hours
Shift Wage Rate: $117.38

Operating Engineer - Road & Heavy Construction VI

Mixers (Concrete with loading attachment), Concrete Pavers, Cableways, Land Derricks, Power Houses (Low Air Pressure Units).

Effective Period: 7/1/2015 - 6/30/2016
Wage Rate per Hour: $69.69
Supplemental Benefit Rate per Hour: $30.40
Supplemental Note: $55.10 overtime hours
Shift Wage Rate: $111.50

Operating Engineer - Road & Heavy Construction VII

Barrier Movers , Barrier Transport and Machines of a Similar Nature.

Effective Period: 7/1/2015 - 6/30/2016
Wage Rate per Hour: $56.25
Supplemental Benefit Rate per Hour: $30.40
Supplemental Note: $55.10 overtime hours
Shift Wage Rate: $90.00

Operating Engineer - Road & Heavy Construction VIII

Utility Compressors

Effective Period: 7/1/2015 - 6/30/2016
Wage Rate per Hour: $43.63
Supplemental Benefit Rate per Hour: $30.40
Supplemental Note: $55.10 overtime hours
Shift Wage Rate: $55.03

Operating Engineer - Road & Heavy Construction IX

Horizontal Boring Rig

Effective Period: 7/1/2015 - 6/30/2016

Wage Rate per Hour: $66.26
Supplemental Benefit Rate per Hour: $30.40
Supplemental Note: $55.10 overtime hours
Shift Wage Rate: $106.02

Operating Engineer - Road & Heavy Construction X

Elevators (manually operated as personnel hoist).

Effective Period: 7/1/2015 - 6/30/2016
Wage Rate per Hour: $60.89
Supplemental Benefit Rate per Hour: $30.40
Supplemental Note: $55.10 overtime hours
Shift Wage Rate: $97.42

Operating Engineer - Road & Heavy Construction XI

Compressors (Portable 3 or more in battery), Driving of Truck Mounted Compressors, Well-point Pumps, Tugger Machines Well Point Pumps, Churn Drill.

Effective Period: 7/1/2015 - 6/30/2016
Wage Rate per Hour: $47.28
Supplemental Benefit Rate per Hour: $30.40
Supplemental Note: $55.10 overtime hours
Shift Wage Rate: $75.65

Operating Engineer - Road & Heavy Construction XII

All Drills and Machines of a similar nature.

Effective Period: 7/1/2015 - 6/30/2016
Wage Rate per Hour: $70.42
Supplemental Benefit Rate per Hour: $30.40
Supplemental Note: $55.10 overtime hours
Shift Wage Rate: $112.67

Operating Engineer - Road & Heavy Construction XIII

Concrete Pumps, Concrete Plant, Stone Crushers, Double Drum Hoist, Power Houses (other than above).

Effective Period: 7/1/2015 - 6/30/2016
Wage Rate per Hour: $68.19
Supplemental Benefit Rate per Hour: $30.40
Supplemental Note: $55.10 overtime hours
Shift Wage Rate: $109.10

Operating Engineer - Road & Heavy Construction XIV

Concrete Mixer

Effective Period: 7/1/2015 - 6/30/2016
Wage Rate per Hour: $65.20
Supplemental Benefit Rate per Hour: $30.40
Supplemental Note: $55.10 overtime hours
Shift Wage Rate: $104.32

Operating Engineer - Road & Heavy Construction XV

Compressors (Portable Single or two in Battery, not over 100 feet apart), Pumps (River Cofferdam) and Welding Machines, Push Button Machines, All Engines Irrespective of Power (Power-Pac) used to drive auxiliary equipment, Air, Hydraulic, etc.

Effective Period: 7/1/2015 - 6/30/2016
Wage Rate per Hour: $43.91
Supplemental Benefit Rate per Hour: $30.40
Supplemental Note: $55.10 overtime hours
Shift Wage Rate: $70.26

Operating Engineer - Road & Heavy Construction XVI

Concrete Breaking Machines, Hoists (Single Drum), Load Masters, Locomotives (over ten tons) and Dinkies over ten tons, Hydraulic Crane-Second Engineer.

Effective Period: 7/1/2015 - 6/30/2016
Wage Rate per Hour: $62.25
Supplemental Benefit Rate per Hour: $30.40
Supplemental Note: $55.10 overtime hours
Shift Wage Rate: $99.60

Operating Engineer - Road & Heavy Construction XVII

On-Site concrete plant engineer, On-site Asphalt Plant Engineer, and Vibratory console.

Effective Period: 7/1/2015 - 6/30/2016
Wage Rate per Hour: $62.74
Supplemental Benefit Rate per Hour: $30.40
Supplemental Note: $55.10 overtime hours
Shift Wage Rate: $100.38

Operating Engineer - Road & Heavy Construction XVIII

Tower Crane

Effective Period: 7/1/2015 - 6/30/2016
Wage Rate per Hour: $90.09
Supplemental Benefit Rate per Hour: $30.40
Supplemental Note: $55.10 overtime hours
Shift Wage Rate: $144.14

Operating Engineer - Paving I

Asphalt Spreaders, Autogrades (C.M.I.), Roto/Mil

Effective Period: 7/1/2015 - 6/30/2016
Wage Rate per Hour: $69.69
Supplemental Benefit Rate per Hour: $30.40
Supplemental Note: $55.10 overtime hours
Shift Wage Rate: $111.50

Operating Engineer - Paving II

Asphalt Roller

Effective Period: 7/1/2015 - 6/30/2016
Wage Rate per Hour: $67.87
Supplemental Benefit Rate per Hour: $30.40
Supplemental Note: $55.10 overtime hours
Shift Wage Rate: $108.59

Operating Engineer - Paving III

Asphalt Plants

Effective Period: 7/1/2015 - 6/30/2016
Wage Rate per Hour: $57.40
Supplemental Benefit Rate per Hour: $30.40
Supplemental Note: $55.10 overtime hours
Shift Wage Rate: $91.84

Operating Engineer - Concrete I

Cranes

Effective Period: 7/1/2015 - 6/30/2016
Wage Rate per Hour: $74.51
Supplemental Benefit Rate per Hour: $30.40
Supplemental Note: $55.10 overtime hours

Operating Engineer - Concrete II

Compressors

Effective Period: 7/1/2015 - 6/30/2016
Wage Rate per Hour: $44.25
Supplemental Benefit Rate per Hour: $30.40
Supplemental Note: $55.10 overtime hours

Operating Engineer - Concrete III

Micro-traps (Negative Air Machines), Vac-All Remediation System.

Effective Period: 7/1/2015 - 6/30/2016
Wage Rate per Hour: $59.51
Supplemental Benefit Rate per Hour: $30.40
Supplemental Note: $55.10 overtime hours

Operating Engineer - Steel Erection I

Three Drum Derricks

Effective Period: 7/1/2015 - 6/30/2016
Wage Rate per Hour: $77.40
Supplemental Benefit Rate per Hour: $30.40
Supplemental Note: $55.10 overtime hours
Shift Wage Rate: $123.84

Operating Engineer - Steel Erection II

Cranes, 2 Drum Derricks, Hydraulic Cranes, Fork Lifts and Boom Trucks.

Effective Period: 7/1/2015 - 6/30/2016
Wage Rate per Hour: $74.37
Supplemental Benefit Rate per Hour: $30.40
Supplemental Note: $55.10 overtime hours
Shift Wage Rate: $118.99

Operating Engineer - Steel Erection III

Compressors, Welding Machines.

Effective Period: 7/1/2015 - 6/30/2016
Wage Rate per Hour: $44.09
Supplemental Benefit Rate per Hour: $30.40
Supplemental Note: $55.10 overtime hours
Shift Wage Rate: $70.54

Operating Engineer - Steel Erection IV

Compressors - Not Combined with Welding Machine.

Effective Period: 7/1/2015 - 6/30/2016
Wage Rate per Hour: $41.98
Supplemental Benefit Rate per Hour: $30.40
Supplemental Note: $55.10 overtime hours
Shift Wage Rate: $67.17

Operating Engineer - Building Work I

Forklifts, Plaster (Platform machine), Plaster Bucket, Concrete Pump and all other equipment used for hoisting material.

Effective Period: 7/1/2015 - 6/30/2016
Wage Rate per Hour: $61.27
Supplemental Benefit Rate per Hour: $30.40
Supplemental Note: $55.10 overtime hours

Operating Engineer - Building Work II

Compressors, Welding Machines (Cutting Concrete-Tank Work), Paint Spraying, Sandblasting, Pumps (with the exclusion of Concrete Pumps), All Engines irrespective of Power (Power-Pac) used to drive Auxiliary Equipment, Air, Hydraulic, Jacking System, etc.

Effective Period: 7/1/2015 - 6/30/2016
Wage Rate per Hour: $45.85
Supplemental Benefit Rate per Hour: $30.40
Supplemental Note: $55.10 overtime hours

Operating Engineer - Building Work III

Double Drum

Effective Period: 7/1/2015 - 6/30/2016
Wage Rate per Hour: $69.76
Supplemental Benefit Rate per Hour: $30.40
Supplemental Note: $55.10 overtime hours

Operating Engineer - Building Work IV

Stone Derrick, Cranes, Hydraulic Cranes Boom Trucks.

Effective Period: 7/1/2015 - 6/30/2016
Wage Rate per Hour: $73.91
Supplemental Benefit Rate per Hour: $30.40
Supplemental Note: $55.10 overtime hours

Operating Engineer - Building Work V

Dismantling and Erection of Cranes, Relief Engineer.

Effective Period: 7/1/2015 - 6/30/2016
Wage Rate per Hour: $68.09
Supplemental Benefit Rate per Hour: $30.40
Supplemental Note: $55.10 overtime hours

Operating Engineer - Building Work VI

4 Pole Hoist, Single Drum Hoists.

Effective Period: 7/1/2015 - 6/30/2016
Wage Rate per Hour: $67.37
Supplemental Benefit Rate per Hour: $30.40
Supplemental Note: $55.10 overtime hours

Operating Engineer - Building Work VII

Rack & Pinion and House Cars

Effective Period: 7/1/2015 - 6/30/2016
Wage Rate per Hour: $53.54
Supplemental Benefit Rate per Hour: $30.40
Supplemental Note: $55.10 overtime hours
For New House Car projects Wage Rate per Hour $42.70

Overtime Description

On jobs of more than one shift, if an Employee fails to report for work through any cause over which the Employer has no control, the Employee on duty will continue to work at the rate of single time.

For House Cars and Rack & Pinion only: Overtime paid at time and one-half for all hours in excess of eight hours in a day, Saturday, Sunday and Holidays worked.

Overtime

Double time the regular rate after an 8 hour day.
Double time the regular time rate for Saturday.
Double time the regular rate for Sunday.
Double time the regular rate for work on the following holiday(s).

Paid Holidays

New Year's Day
Lincoln's Birthday
President's Day
Memorial Day
Independence Day
Labor Day
Columbus Day
Veteran's Day
Thanksgiving Day
Day after Thanksgiving
Christmas Day
Employees must work at least one day in the payroll week in which the holiday occurs to receive the paid holiday

Shift Rates

For Steel Erection Only: Shifts may be worked at the single time rate at other than the regular working hours (8:00 A.M. to 4:30 P.M.) on the following work ONLY: Heavy construction jobs on work below the street level, over railroad tracks and on building jobs.

(Operating Engineer Local #14)

FLOOR COVERER
(Interior vinyl composition tile, sheath vinyl linoleum and wood parquet tile including site preparation and synthetic turf not including site preparation)

Floor Coverer

Effective Period: 7/1/2015 - 6/30/2016
Wage Rate per Hour: $49.88
Supplemental Benefit Rate per Hour: $44.10

Overtime
Time and one half the regular rate after an 8 hour day.
Time and one half the regular rate for Saturday.
Double time the regular rate for Sunday.

Overtime Holidays
Double time the regular rate for work on the following holiday(s).
New Year's Day
President's Day
Memorial Day
Independence Day
Labor Day
Columbus Day
Presidential Election Day
Thanksgiving Day
Day after Thanksgiving
Christmas Day

Paid Holidays
1/2 day on Christmas Eve if work is performed in the A.M.
1/2 day on New Year's Eve if work is performed in the A.M.

Shift Rates
Two shifts may be utilized with the first shift working 8:00 A.M. to the end of the shift at the straight time of pay. The second shift will receive one hour at double time rate for the last hour of the shift. (eight for seven, nine for eight).

(Carpenters District Council)

GLAZIER
(New Construction, Remodeling, and Alteration)

Glazier

Effective Period: 7/1/2015 - 10/31/2015

Wage Rate per Hour: $43.35
Supplemental Benefit Rate per Hour: $36.59
Supplemental Note: Supplemental Benefit Overtime Rate: $45.34

Effective Period: 11/1/2015 - 6/30/2016
Wage Rate per Hour: $43.95
Supplemental Benefit Rate per Hour: $36.84
Supplemental Note: Supplemental Benefit Overtime Rate: $45.59

Overtime Description
An optional 8th hour can be worked at straight time rate. If 9th hour is worked, then both hours or more (8th & 9th or more) will be at the double time rate of pay.

Overtime
Double time the regular rate after a 7 hour day.
Double time the regular time rate for Saturday.
Double time the regular rate for Sunday.

Overtime Holidays
Double time the regular rate for work on the following holiday(s).
New Year's Day
President's Day
Memorial Day
Independence Day
Labor Day
Thanksgiving Day
Day after Thanksgiving
Christmas Day

Paid Holidays
None

Shift Rates
Shifts shall be any 7 hours beyond 4:00 P.M. for which the glazier shall receive 8 hours pay for 7 hours worked.

(Local #1281)

GLAZIER - REPAIR & MAINTENANCE
(For the Installation of Glass - All repair and maintenance work on a particular building, whenever performed, where the total cumulative contract value is under $105,000. Except where enumerated (i.e. plate glass windows) does not apply to non-residential buildings.)

Craft Jurisdiction for repair, maintenance and fabrication

Plate glass replacement, Residential glass replacement, Residential mirrors and shower doors, Storm windows and storm doors, Residential replacement windows, Herculite door repairs, Door closer repairs, Retrofit apartment house (non commercial buildings), Glass tinting.

Effective Period: 7/1/2015 - 6/30/2016
Wage Rate per Hour: $23.68
Supplemental Benefit Rate per Hour: $19.54

Overtime
Time and one half the regular rate after an 8 hour day.
Double time the regular rate for Sunday.
Time and one half the regular hourly rate after 40 hours in any work week.

Paid Holidays
New Year's Day
President's Day
Memorial Day
Independence Day
Labor Day
Thanksgiving Day
Day after Thanksgiving
Christmas Day

(Local #1281)

HEAT AND FROST INSULATOR

Heat & Frost Insulator

Effective Period: 7/1/2015 - 6/30/2016
Wage Rate per Hour: $56.98
Supplemental Benefit Rate per Hour: $34.81

Overtime Description
Double time shall be paid for supplemental benefits during overtime work.
8th hour paid at time and one half.

Overtime
Double time the regular rate after an 8 hour day.
Double time the regular time rate for Saturday.
Double time the regular rate for Sunday.

Overtime Holidays
Double time the regular rate for work on the following holiday(s).
New Year's Day
Martin Luther King Jr. Day
President's Day
Memorial Day
Independence Day

Columbus Day
Veteran's Day
Thanksgiving Day
Day after Thanksgiving
Christmas Day

Triple time the regular rate for work on the following holiday(s).
Labor Day

Paid Holidays
None

Shift Rates
The first shift shall work seven hours at the regular straight time rate. The second and third shift shall work seven hours the regular straight time hourly rate plus a fourteen percent wage and benefit premium. Off hour work in occupied or retail buildings may be worked on weekdays with an increment of $1.00 per hour and eight hours pay for seven (7) hours worked. Double time will apply for over seven (7) hours worked on weekdays, weekends or holidays.

(Local #12)

HOUSE WRECKER (TOTAL DEMOLITION)

House Wrecker - Tier A

On all work sites the first, second, eleventh and every third House Wrecker thereafter will be Tier A House Wreckers (i.e. 1st, 2nd, 11th, 14th etc). Other House Wreckers may be Tier B House Wreckers.

Effective Period: 7/1/2015 - 6/30/2016
Wage Rate per Hour: $35.30
Supplemental Benefit Rate per Hour: $26.31

House Wrecker - Tier B

Effective Period: 7/1/2015 - 6/30/2016
Wage Rate per Hour: $24.70
Supplemental Benefit Rate per Hour: $19.52

Overtime
Time and one half the regular rate after an 8 hour day.
Time and one half the regular rate for Saturday.
Double time the regular rate for Sunday.

Overtime Holidays
Double time the regular rate for work on the following holiday(s).
New Year's Day

President's Day
Memorial Day
Independence Day
Labor Day
Thanksgiving Day
Christmas Day

Paid Holidays
None

(Mason Tenders District Council)

IRON WORKER - ORNAMENTAL

Iron Worker - Ornamental

Effective Period: 7/1/2015 - 6/30/2016
Wage Rate per Hour: $43.00
Supplemental Benefit Rate per Hour: $46.67
Supplemental Note: Supplemental benefits are to be paid at the applicable overtime rate when overtime is in effect.

Overtime Description
Time and one half the regular rate after a 7 hour day for a maximum of two hours on any regular work day (the 8th and 9th hour) and double time shall be paid for all work on a regular work day thereafter, time and one half the regular rate for Saturday for the first seven hours of work and double time shall be paid for all work on a Saturday thereafter.

Overtime
Double time the regular rate for Sunday.

Overtime Holidays
Double time the regular rate for work on the following holiday(s).
New Year's Day
President's Day
Memorial Day
Independence Day
Labor Day
Thanksgiving Day
Christmas Day

Paid Holidays
None

Shift Rates
For off shift work - 8 hours pay for 7 hours of work. When two or three shifts are employed on a job, Monday through Friday, the workday for each shift shall be seven hours and paid for ten and one-half hours at the single time rate. When two or three shifts are worked on Saturday, Sunday or holidays, each shift shall be seven hours and paid fifteen and three-quarters hours.

(Local #580)

IRON WORKER - STRUCTURAL

Iron Worker - Structural

Effective Period: 7/1/2015 - 6/30/2016
Wage Rate per Hour: $47.75
Supplemental Benefit Rate per Hour: $65.35
Supplemental Note: Supplemental benefits are to be paid at the applicable overtime rate when overtime is in effect.

Overtime Description
Monday through Friday- the first eight hours are paid at straight time, the 9th and 10th hours are paid at time and one-half the regular rate, all additional weekday overtime is paid at double the regular rate. Saturdays- the first eight hours are paid at time and one-half the regular rate, double time thereafter. Sunday-all shifts are paid at double time.

Overtime
Time and one half the regular rate after an 8 hour day.
Time and one half the regular rate for Saturday.
Double time the regular rate for Sunday.

Overtime Holidays
Double time the regular rate for work on the following holiday(s).
New Year's Day
Good Friday
Memorial Day
Independence Day
Labor Day
Thanksgiving Day
Christmas Day

Paid Holidays
1/2 day on Christmas Eve if work is performed in the A.M.
1/2 day on New Year's Eve if work is performed in the A.M.

Shift Rates
Monday through Friday - First Shift: First eight hours are paid at straight time, the 9th & 10th hours are paid at time and a half, double time paid thereafter. Second and third Shifts: First eight hours are paid at time and one-half, double time thereafter. Saturdays: All shifts, first eight hours paid at time and one-half, double time thereafter: Sunday all shifts are paid at double time.

(Local #40 & #361)

LABORER
(Foundation, Concrete, Excavating, Street Pipe Layer and Common)

Laborer

Excavation and foundation work for buildings, heavy construction, engineering work, and hazardous waste removal in connection with the above work. Landscaping tasks in connection with heavy construction work, engineering work and building projects. Projects include, but are not limited to pollution plants, sewers, parks, subways, bridges, highways, etc.

Effective Period: 7/1/2015 - 6/30/2016
Wage Rate per Hour: $40.50
Supplemental Benefit Rate per Hour: $36.53

Overtime
Time and one half the regular rate after an 8 hour day.
Time and one half the regular rate for Saturday.
Double time the regular rate for Sunday.

Overtime Holidays
Double time the regular rate for work on the following holiday(s).
New Year's Day
Memorial Day
Independence Day
Labor Day
Columbus Day
Presidential Election Day
Thanksgiving Day
Christmas Day

Paid Holidays
Labor Day
Thanksgiving Day

Shift Rates
When two shifts are employed, single time rate shall be paid for each shift. When three shifts are found necessary, each shift shall work seven and one half hours (7 ½), but shall be paid for eight (8) hours of labor, and be permitted one half hour for lunch.

(Local #731)

LANDSCAPING
(Landscaping tasks, as well as tree pruning, tree removing, spraying and maintenance in connection with the planting of street trees and the planting of trees in city parks but not when such activities are performed as part of, or in connection with, other construction or reconstruction projects.)

Landscaper (Above 6 years experience)

Effective Period: 7/1/2015 - 6/30/2016
Wage Rate per Hour: $27.00
Supplemental Benefit Rate per Hour: $14.55

Landscaper (3 - 6 years experience)

Effective Period: 7/1/2015 - 6/30/2016
Wage Rate per Hour: $26.00
Supplemental Benefit Rate per Hour: $14.55

Landscaper (up to 3 years experience)

Effective Period: 7/1/2015 - 6/30/2016
Wage Rate per Hour: $23.50
Supplemental Benefit Rate per Hour: $14.55

Groundperson

Effective Period: 7/1/2015 - 6/30/2016
Wage Rate per Hour: $23.50
Supplemental Benefit Rate per Hour: $14.55

Tree Remover / Pruner

Effective Period: 7/1/2015 - 6/30/2016
Wage Rate per Hour: $32.00
Supplemental Benefit Rate per Hour: $14.55

Landscaper Sprayer (Pesticide Applicator)

Effective Period: 7/1/2015 - 6/30/2016
Wage Rate per Hour: $22.00
Supplemental Benefit Rate per Hour: $14.55

Watering - Plant Maintainer

Effective Period: 7/1/2015 - 6/30/2016
Wage Rate per Hour: $17.00
Supplemental Benefit Rate per Hour: $14.55

Overtime Description

For all overtime work performed, supplemental benefits shall include an additional seventy-five ($0.75) cents per hour.

Overtime

Time and one half the regular rate after an 8 hour day.
Time and one half the regular rate for Saturday.
Double time the regular rate for Sunday.
Time and one half the regular rate for work on a holiday plus the day's pay.

Paid Holidays

New Year's Day
Memorial Day
Independence Day
Labor Day
Thanksgiving Day
Christmas Day

Shift Rates

Work performed on a 4pm to 12am shift has a 15% differential. Work performed on a 12am to 8am shift has a 20% differential.

(Local #175)

MARBLE MECHANIC

Marble Setter

Effective Period: 7/1/2015 - 12/31/2015
Wage Rate per Hour: $51.53
Supplemental Benefit Rate per Hour: $35.73

Effective Period: 1/1/2016 - 6/30/2016
Wage Rate per Hour: $51.89
Supplemental Benefit Rate per Hour: $36.62

Marble Finisher

Effective Period: 7/1/2015 - 12/31/2015
Wage Rate per Hour: $40.53
Supplemental Benefit Rate per Hour: $34.52

Effective Period: 1/1/2016 - 6/30/2016
Wage Rate per Hour: $40.80
Supplemental Benefit Rate per Hour: $35.15

Marble Polisher

Effective Period: 7/1/2015 - 12/31/2015
Wage Rate per Hour: $36.65
Supplemental Benefit Rate per Hour: $26.63

Effective Period: 1/1/2016 - 6/30/2016
Wage Rate per Hour: $37.02
Supplemental Benefit Rate per Hour: $27.01

Overtime Description
Supplemental Benefit contributions are to be made at the applicable overtime rates. Time and one half the regular rate after a 7 hour day or time and one half the regular rate after an 8 hour day - chosen by Employer at the start of the project and then would last for the full duration of the project.

Overtime
Time and one half the regular rate for Saturday.
Double time the regular rate for Sunday.

Overtime Holidays
Double time the regular rate for work on the following holiday(s).
New Year's Day
President's Day
Good Friday
Memorial Day
Independence Day
Labor Day
Columbus Day
Veteran's Day
Thanksgiving Day
Day after Thanksgiving
Christmas Day

Paid Holidays
None

(Local #7)

MASON TENDER

Mason Tender

Effective Period: 7/1/2015 - 6/30/2016
Wage Rate per Hour: $36.47
Supplemental Benefit Rate per Hour: $27.27

Overtime
Time and one half the regular rate after an 8 hour day.
Time and one half the regular rate for Saturday.
Double time the regular rate for Sunday.
Saturday may be used as a make-up day at straight time when a day is lost during that week to inclement weather.

Overtime Holidays

Double time the regular rate for work on the following holiday(s).
New Year's Day
President's Day
Memorial Day
Independence Day
Labor Day
Thanksgiving Day
Christmas Day

Paid Holidays

None

Shift Rates

The Employer may work two (2) shifts with the first shift at the straight time wage rate and the second shift receiving eight (8) hours paid for seven (7) hours work at the straight time wage rate.

(Local #79)

MASON TENDER (INTERIOR DEMOLITION WORKER)

(The erection, building, moving, servicing and dismantling of enclosures, scaffolding, barricades, protection and site safety structures etc., on Interior Demolition jobs.)

Mason Tender Tier A

Effective Period: 7/1/2015 - 6/30/2016
Wage Rate per Hour: $35.26
Supplemental Benefit Rate per Hour: $21.58

Mason Tender Tier B

On Interior Demolition job sites 33 1/3 % of the employees shall be classified as Tier A Interior Demolition Workers and 66 2/3 % shall be classified as Tier B Interior Demolition Workers; provided that the employer may employ more than 33 1/3 % Tier A Interior Demolition Workers on the job site. Where the number of employees on a job site is not divisible by 3, the first additional employee (above the number of employees divisible by three) shall be a Tier B Interior Demolition Worker, and the second additional employee shall be a Tier A Interior Demolition Worker.

Effective Period: 7/1/2015 - 6/30/2016
Wage Rate per Hour: $24.45
Supplemental Benefit Rate per Hour: $15.90

Overtime

Time and one half the regular rate after an 8 hour day.
Time and one half the regular rate for Sunday.

Overtime Holidays
Double time the regular rate for work on the following holiday(s).
New Year's Day
President's Day
Memorial Day
Independence Day
Labor Day
Thanksgiving Day
Christmas Day

Paid Holidays
None

(Local #79)

METALLIC LATHER

Metallic Lather

Effective Period: 7/1/2015 - 6/30/2016
Wage Rate per Hour: $42.03
Supplemental Benefit Rate per Hour: $41.07
Supplemental Note: Supplemental benefits for overtime are paid at the appropriate overtime rate.

Overtime Description
Overtime would be time and one half the regular rate after a seven (7) or eight (8) hours workday, which would be set at the start of the job.

Overtime
Time and one half the regular rate for Saturday.
Double time the regular rate for Sunday.

Overtime Holidays
Double time the regular rate for work on the following holiday(s).
New Year's Day
Washington's Birthday
Good Friday
Memorial Day
Independence Day
Labor Day
Columbus Day
Presidential Election Day
Thanksgiving Day
Christmas Day

Paid Holidays
1/2 day on Christmas Eve if work is performed in the A.M.
1/2 day on New Year's Eve if work is performed in the A.M.

Shift Rates

There shall be either two (2) or three (3) shifts, each shift shall be eight (8) hours with nine (9) hours pay, including one half (½) hour for lunch. Off-Hour Start shall commence after 3:30 P.M. and shall conclude by 6:00 A.M. The first consecutive seven (7) hours shall be at straight time with a differential of twelve dollars ($12.00) per hour. Fringes shall be paid at the straight time rate.

(Local #46)

MILLWRIGHT

Millwright

Effective Period: 7/1/2015 - 6/30/2016
Wage Rate per Hour: $48.44
Supplemental Benefit Rate per Hour: $50.52

Overtime

Time and one half the regular rate after an 8 hour day.
Time and one half the regular rate for Saturday.
Double time the regular rate for Sunday.
Saturday may be used as a make-up day at straight time when a day is lost during that week to inclement weather.

Overtime Holidays

Double time the regular rate for work on the following holiday(s).
New Year's Day
President's Day
Good Friday
Memorial Day
Independence Day
Labor Day
Columbus Day
Presidential Election Day
Thanksgiving Day
Christmas Day

Paid Holidays

1/2 day on Christmas Eve if work is performed in the A.M.
1/2 day on New Year's Eve if work is performed in the A.M.

Shift Rates

The first shift shall receive the straight time rate of pay. The second shift receives the straight time rate of pay plus fifteen (15%) per cent. Members of the second shift shall be allowed one half hour to eat, with this time being included in the hours of the workday established. There must be a first shift to work a second shift. All additional hours worked shall be paid at the time and one-half rate of pay plus fifteen (15%) per cent for weekday hours.

(Local #740)

MOSAIC MECHANIC

Mosaic Mechanic - Mosaic & Terrazzo Mechanic

Effective Period: 7/1/2015 - 6/30/2016
Wage Rate per Hour: $45.52
Supplemental Benefit Rate per Hour: $37.39
Supplemental Note: Supplemental benefits for overtime to be paid at the rate of $48.36 per hour.

Mosaic Mechanic - Mosaic & Terrazzo Finisher

Effective Period: 7/1/2015 - 6/30/2016
Wage Rate per Hour: $43.92
Supplemental Benefit Rate per Hour: $37.37
Supplemental Note: Supplemental benefits for overtime to be paid at the rate of $48.34 per hour.

Mosaic Mechanic - Machine Operator Grinder

Effective Period: 7/1/2015 - 6/30/2016
Wage Rate per Hour: $43.92
Supplemental Benefit Rate per Hour: $37.37
Supplemental Note: Supplemental benefits for overtime to be paid at the rate of $48.34 per hour.

Overtime
Time and one half the regular rate after a 7 hour day.
Time and one half the regular rate for Saturday.
Double time the regular rate for Sunday.

Overtime Holidays
Double time the regular rate for work on the following holiday(s).
New Year's Day
Washington's Birthday
Good Friday
Independence Day
Labor Day
Columbus Day
Veteran's Day
Thanksgiving Day
Day after Thanksgiving
Christmas Day

Paid Holidays
None

(Local #7)

PAINTER

Painter - Brush & Roller

Effective Period: 7/1/2015 - 6/30/2016
Wage Rate per Hour: $39.50
Supplemental Benefit Rate per Hour: $26.12
Supplemental Note: $30.75 on overtime

Spray & Scaffold / Decorative / Sandblast

Effective Period: 7/1/2015 - 6/30/2016
Wage Rate per Hour: $42.50
Supplemental Benefit Rate per Hour: $26.12
Supplemental Note: $30.75 on overtime

Overtime
Time and one half the regular rate after a 7 hour day.
Time and one half the regular rate for Saturday.
Time and one half the regular rate for Sunday.

Overtime Holidays
Time and one half the regular rate for work on the following holiday(s).
New Year's Day
President's Day
Memorial Day
Independence Day
Labor Day
Columbus Day
Thanksgiving Day
Christmas Day

Paid Holidays
None

(District Council of Painters #9)

PAINTER - SIGN

Designer

Effective Period: 7/1/2015 - 6/30/2016
Wage Rate per Hour: $36.15
Supplemental Benefit Rate per Hour: $9.66

Journeyperson

Effective Period: 7/1/2015 - 6/30/2016
Wage Rate per Hour: $33.62
Supplemental Benefit Rate per Hour: $9.66

Overtime

Time and one half the regular rate after an 8 hour day.
Time and one half the regular rate for Saturday.
Time and one half the regular rate for Sunday.
Double time the regular rate for work on the following holiday(s).

Paid Holidays

New Year's Day
President's Day
Memorial Day
Independence Day
Labor Day
Columbus Day
Election Day
Thanksgiving Day
Day after Thanksgiving
Christmas Day

Shift Rates

All work performed outside the regular 8 hour work day (either 7:00 A.M to 3:30 P.M or 8:00 A.M. to 4:30 P.M) shall be paid at time and one half the regular hourly rate.

(Local #8A-28A)

PAINTER - STRIPER

Striper (paint)

Effective Period: 7/1/2015 - 6/30/2016
Wage Rate per Hour: $35.00
Supplemental Benefit Rate per Hour: $12.27
Supplemental Note: Overtime Supplemental Benefit rate - $8.02 New Hire Rate (0-3 months) - $0.00

Lineperson (thermoplastic)

Effective Period: 7/1/2015 - 6/30/2016
Wage Rate per Hour: $39.00
Supplemental Benefit Rate per Hour: $12.27
Supplemental Note: Overtime Supplemental Benefit rate - $8.02; New Hire Rate (0-3 months) - $0.00

Overtime

Time and one half the regular rate after an 8 hour day.
Time and one half the regular rate for Saturday.

Double time the regular rate for Sunday.
Time and one half the regular rate for work on the following holiday(s).

Paid Holidays

New Year's Day
Good Friday
Memorial Day
Independence Day
Labor Day
Columbus Day
Presidential Election Day
Thanksgiving Day
Day after Thanksgiving
Christmas Day

Shift Rates

Employees hired before April 1, 2003: 15% night shift premium differential for work commenced at 9:00 PM or later.

Vacation

Employees with one to two years service shall accrue vacation based on hours worked: 250 hours worked - 1 day vacation; 500 hours worked - 2 days vacation; 750 hours worked - 3 days vacation; 900 hours worked - 4 days vacation; 1,000 hours worked - 5 days vacation. Employees with two to five years service receive two weeks vacation. Employees with five to twenty years service receive three weeks vacation. Employees with twenty to twenty-five years service receive four weeks vacation. Employees with 25 or more years service receive five weeks vacation. Vacation must be taken during winter months. 2 Personal Days except employees hired after 4/1/12 who do not have 2 years of service.

(Local #917)

PAINTER - STRUCTURAL STEEL

Painters on Structural Steel

Effective Period: 7/1/2015 - 9/30/2015
Wage Rate per Hour: $48.00
Supplemental Benefit Rate per Hour: $34.58

Effective Period: 10/1/2015 - 6/30/2016
Wage Rate per Hour: $49.00
Supplemental Benefit Rate per Hour: $36.08

Painter - Power Tool

Effective Period: 7/1/2015 - 9/30/2015
Wage Rate per Hour: $54.00
Supplemental Benefit Rate per Hour: $34.58

Effective Period: 10/1/2015 - 6/30/2016
Wage Rate per Hour: $55.00

Supplemental Benefit Rate per Hour: $36.08

Overtime Description
Supplemental Benefits shall be paid for each hour worked, up to forty (40) hours per week for the period of May 1st to November 15th or up to fifty (50) hours per week for the period of November 16th to April 30th.

Overtime
Time and one half the regular rate after a 7 hour day.
Time and one half the regular rate for Saturday.
Time and one half the regular rate for Sunday.

Overtime Holidays
Double time the regular rate for work on the following holiday(s).
New Year's Day
Memorial Day
Independence Day
Labor Day
Thanksgiving Day
Christmas Day

Paid Holidays
None

Shift Rates
Regular hourly rates plus a ten per cent (10%) differential

(Local #806)

PAPERHANGER

Paperhanger

Effective Period: 7/1/2015 - 6/30/2016
Wage Rate per Hour: $41.08
Supplemental Benefit Rate per Hour: $29.23
Supplemental Note: Supplemental benefits are to be paid at the appropriate straight time and overtime rate.

Overtime
Time and one half the regular rate after a 7 hour day.
Time and one half the regular rate for Saturday.
Time and one half the regular rate for Sunday.

Overtime Holidays
Time and one half the regular rate for work on the following holiday(s).
New Year's Day
President's Day
Memorial Day
Independence Day

Labor Day
Thanksgiving Day
Day after Thanksgiving
Christmas Day

Paid Holidays
None

Shift Rates
Evening shift - 4:30 P.M. to 12:00 Midnight (regular rate of pay); any work performed before 7:00 A.M. shall be at time and one half the regular base rate of pay.

(District Council of Painters #9)

PAVER AND ROADBUILDER

Paver & Roadbuilder - Formsetter

Effective Period: 7/1/2015 - 6/30/2016
Wage Rate per Hour: $44.85
Supplemental Benefit Rate per Hour: $36.92

Paver & Roadbuilder - Laborer

Paving and road construction work, regardless of material used, including but not limited to preparation of job sites, removal of old surfaces, asphalt and/or concrete, by whatever method, including but not limited to milling; laying of concrete; laying of asphalt for temporary, patchwork, and utility paving (but not production paving); site preparation and incidental work before the installation of rubberized materials and similar surfaces; installation and repair of temporary construction fencing; slurry seal coating, maintenance of safety surfaces; play equipment installation, and other related work.

Effective Period: 7/1/2015 - 6/30/2016
Wage Rate per Hour: $40.98
Supplemental Benefit Rate per Hour: $36.92

Production Paver & Roadbuilder - Screed Person

(Production paving is asphalt paving when using a paving machine or on a project where a paving machine is traditionally used)

Adjustment of paving machinery on production paving jobs.

Effective Period: 7/1/2015 - 6/30/2016
Wage Rate per Hour: $45.45
Supplemental Benefit Rate per Hour: $36.92

Production Paver & Roadbuilder - Raker

Effective Period: 7/1/2015 - 6/30/2016
Wage Rate per Hour: $44.85
Supplemental Benefit Rate per Hour: $36.92

Production Paver & Roadbuilder - Shoveler

General laborer (except removal of surfaces - see Paver and Roadbuilder-Laborer) including but not limited to tamper, AC paint and liquid tar work.

Effective Period: 7/1/2015 - 6/30/2016
Wage Rate per Hour: $41.56
Supplemental Benefit Rate per Hour: $36.92

Overtime Description
Veteran's Day is a Paid Holiday for employees working on production paving.

If an employee works New Year's Day or Christmas Day, they receive the single time rate plus 25%.

Employees who work on a holiday listed below receive the straight time rate plus one day's pay for the holiday.

Overtime
Time and one half the regular rate after an 8 hour day.
Time and one half the regular rate for Saturday.
Double time the regular rate for Sunday.

Paid Holidays
Memorial Day
Independence Day
Labor Day
Presidential Election Day
Thanksgiving Day

Shift Rates
When two shifts are employed, the work period for each shift shall be a continuous eight (8) hours. When three shifts are employed, each shift will work seven and one half (7 ½) hours but will be paid for eight (8) hours since only one half (1/2) hour is allowed for meal time.
When two or more shifts are employed, single time will be paid for each shift.

Night Work - On night work, the first eight (8) hours of work will be paid for at the single time rate, except that production paving work shall be paid at 15% over the single time rate for the screed person, rakers and shovelers directly involved only. All other workers will be exempt. Hours worked over eight (8) hours during said shift shall be paid for at the time and one-half rate.

(Local #1010)

PLASTERER

Plasterer

Effective Period: 7/1/2015 - 6/30/2016
Wage Rate per Hour: $43.43
Supplemental Benefit Rate per Hour: $27.95

Overtime
Time and one half the regular rate after a 7 hour day.
Time and one half the regular rate for Saturday.
Double time the regular rate for Sunday.
Saturday may be used as a make-up day at straight time when a day is lost during that week to inclement weather.

Overtime Holidays
Double time the regular rate for work on the following holiday(s).
New Year's Day
Martin Luther King Jr. Day
President's Day
Good Friday
Memorial Day
Independence Day
Labor Day
Columbus Day
Presidential Election Day
Thanksgiving Day
Christmas Day

Paid Holidays
None

Shift Rates
When it is not possible to conduct alteration work during regular work hours, in a building occupied by tenants, said work shall proceed on a shift basis: however work over seven (7) hours in any twenty four (24) hour period, the time after seven (7) hours shall be considered overtime.
The second shift shall start at a time between 3:30 p.m. and 7:00 p.m. and shall consist of seven (7) working hours and shall receive eight (8) hours of wages and benefits at the straight time rate. The workers on the second shift shall be allowed one-half (½) hour to eat with this time being included in the seven (7) hours of work.

(Local #530)

PLASTERER - TENDER

Plasterer - Tender

Effective Period: 7/1/2015 - 6/30/2016
Wage Rate per Hour: $36.47
Supplemental Benefit Rate per Hour: $27.27

Overtime
Time and one half the regular rate after an 8 hour day.

Time and one half the regular rate for Saturday.
Double time the regular rate for Sunday.
Saturday may be used as a make-up day at straight time when a day is lost during that week to inclement weather.

Overtime Holidays

Double time the regular rate for work on the following holiday(s).
New Year's Day
Washington's Birthday
Memorial Day
Independence Day
Labor Day
Presidential Election Day
Thanksgiving Day
Christmas Day

Paid Holidays

None

Shift Rates

When work commences outside regular work hours, workers receive an hour additional (differential) wage and supplement payment. Eight hours pay for seven hours work or nine hours pay for eight hours work.

(Mason Tenders District Council)

PLUMBER

Plumber

Effective Period: 7/1/2015 - 6/30/2016
Wage Rate per Hour: $65.27
Supplemental Benefit Rate per Hour: $27.08
Supplemental Note: Overtime supplemental benefit rate per hour: $53.88

Plumber - Temporary Services

Temporary Services - When there are no Plumbers on the job site, there may be three shifts designed to cover the entire twenty-four hour period, including weekends if necessary, at the following rate straight time.

Effective Period: 7/1/2015 - 6/30/2016
Wage Rate per Hour: $52.24
Supplemental Benefit Rate per Hour: $21.24

Overtime Description

Double time the regular rate after a 7 hour day - unless for new construction site work where the plumbing contract price is $1.5 million or less, the hours of labor can be 8 hours per day at the employers option. On Alteration jobs when other mechanical trades at the site are working an eighth hour at straight time, then the plumber shall also work an eighth hour at straight time.

Overtime
Double time the regular time rate for Saturday.
Double time the regular rate for Sunday.

Overtime Holidays
Double time the regular rate for work on the following holiday(s).
New Year's Day
President's Day
Memorial Day
Independence Day
Labor Day
Columbus Day
Veteran's Day
Thanksgiving Day
Day after Thanksgiving
Christmas Day

Shift Rates
Shift work, when directly specified in public agency or authority documents where plumbing contract is $8 million or less, will be permitted. 30% shift premium shall be paid for wages and fringe benefits for 4:00 pm and midnight shifts Monday to Friday. 50% shift premium shall be paid for wages and fringe benefits for 4:00 pm and midnight shift work performed on weekends. For shift work on holidays, double time wages and fringe benefits shall be paid.

(Plumbers Local #1)

PLUMBER (MECHNICAL EQUIPMENT AND SERVICE)
(Mechanical Equipment and Service work shall include any repair and/or replacement of the present plumbing system.)

Plumber

Effective Period: 7/1/2015 - 6/30/2016
Wage Rate per Hour: $38.77
Supplemental Benefit Rate per Hour: $13.34

Overtime
Time and one half the regular rate after an 8 hour day.
Time and one half the regular rate for Saturday.
Time and one half the regular rate for Sunday.

Overtime Holidays
Time and one half the regular rate for work on the following holiday(s).
New Year's Day
President's Day
Memorial Day
Independence Day
Thanksgiving Day

Day after Thanksgiving
Christmas Day

Paid Holidays
None

(Plumbers Local # 1)

PLUMBER (RESIDENTIAL RATES FOR 1, 2 AND 3 FAMILY HOME CONSTRUCTION)

Effective Period: 7/1/2015 - 6/30/2016
Wage Rate per Hour: $45.19
Supplemental Benefit Rate per Hour: $19.70

Overtime
Double time the regular rate after an 8 hour day.
Double time the regular time rate for Saturday.
Double time the regular rate for Sunday.

Overtime Holidays
Double time the regular rate for work on the following holiday(s).
New Year's Day
President's Day
Memorial Day
Independence Day
Labor Day
Columbus Day
Veteran's Day
Thanksgiving Day
Day after Thanksgiving
Christmas Day

Paid Holidays
None

Shift Rates
30% shift premium shall be paid for wages and fringe benefits for 4:00 pm and midnight shifts Monday to Friday. 50% shift premium shall be paid for wages and fringe benefits for 4:00 pm and midnight shift work performed on weekends. For shift work on holidays, double time wages and fringe benefits shall be paid.

(Plumbers Local #1)

PLUMBER: PUMP & TANK
Oil Trades (Installation and Maintenance)

Plumber - Pump & Tank

Effective Period: 7/1/2015 - 6/30/2016
Wage Rate per Hour: $62.83
Supplemental Benefit Rate per Hour: $21.37

Overtime
Time and one half the regular rate after an 8 hour day.
Time and one half the regular rate for Saturday.
Time and one half the regular rate for Sunday.

Overtime Holidays
Time and one half the regular rate for work on the following holiday(s).
New Year's Day
President's Day
Memorial Day
Independence Day
Labor Day
Columbus Day
Veteran's Day
Thanksgiving Day
Day after Thanksgiving
Christmas Day

Paid Holidays
None

Shift Rates
All work outside the regular workday (8:00 A.M. to 3:30 P.M.) is to be paid at time and one half the regular hourly rate

(Plumbers Local #1)

POINTER - WATERPROOFER, CAULKER MECHANIC (EXTERIOR BUILDING RENOVATION)

Pointer - Waterproofer, Caulker Mechanic

Effective Period: 7/1/2015 - 6/30/2016
Wage Rate per Hour: $47.41
Supplemental Benefit Rate per Hour: $24.40

Overtime
Time and one half the regular rate after an 8 hour day.
Time and one half the regular rate for Saturday.
Time and one half the regular rate for Sunday.

Saturday may be used as a make-up day at straight time when a day is lost during that week to inclement weather.

Overtime Holidays

Time and one half the regular rate for work on the following holiday(s).
New Year's Day
Martin Luther King Jr. Day
President's Day
Memorial Day
Independence Day
Labor Day
Thanksgiving Day
Christmas Day

Paid Holidays

None

Shift Rates

All work outside the regular work day (an eight hour workday between the hours of 6:00 A.M. and 4:30 P.M.) is to be paid at time and one half the regular rate.

(Bricklayer District Council)

ROOFER

Roofer

Effective Period: 7/1/2015 - 6/30/2016
Wage Rate per Hour: $40.70
Supplemental Benefit Rate per Hour: $28.67

Overtime

Time and one half the regular rate after an 8 hour day.
Time and one half the regular rate for Saturday.
Time and one half the regular rate for Sunday.

Overtime Holidays

Time and one half the regular rate for work on the following holiday(s).
New Year's Day
President's Day
Memorial Day
Independence Day
Labor Day
Presidential Election Day
Thanksgiving Day
Christmas Day

Paid Holidays

None

Shift Rates
Second shift - Regular hourly rate plus a 10% differential. Third shift - Regular hourly rate plus a 15% differential.

(Local #8)

SANDBLASTER - STEAMBLASTER
(Exterior Building Renovation)

Sandblaster / Steamblaster

Effective Period: 7/1/2015 - 6/30/2016
Wage Rate per Hour: $47.41
Supplemental Benefit Rate per Hour: $24.40

Overtime
Time and one half the regular rate after an 8 hour day.
Time and one half the regular rate for Saturday.
Time and one half the regular rate for Sunday.
Saturday may be used as a make-up day at straight time when a day is lost during that week to inclement weather.

Overtime Holidays
Time and one half the regular rate for work on the following holiday(s).
New Year's Day
Martin Luther King Jr. Day
President's Day
Memorial Day
Independence Day
Labor Day
Thanksgiving Day
Christmas Day

Paid Holidays
None

Shift Rates
All work outside the regular work day (an eight hour workday between the hours of 6:00 A.M. and 4:30 P.M.) is to be paid at time and one half the regular rate.

(Bricklayer District Council)

SHEET METAL WORKER

Sheet Metal Worker

Effective Period: 7/1/2015 - 6/30/2016
Wage Rate per Hour: $46.96
Supplemental Benefit Rate per Hour: $45.19
Supplemental Note: Supplemental benefit contributions are to be made at the applicable overtime rates.

Sheet Metal Worker - Fan Maintenance

(The temporary operation of fans or blowers in new or existing buildings for heating and/or ventilation, and/or air conditioning prior to the completion of the project.)

Effective Period: 7/1/2015 - 6/30/2016
Wage Rate per Hour: $37.57
Supplemental Benefit Rate per Hour: $45.19

Sheet Metal Worker - Duct Cleaner

Effective Period: 7/1/2015 - 6/30/2016
Wage Rate per Hour: $12.90
Supplemental Benefit Rate per Hour: $8.07

Overtime
Time and one half the regular rate after a 7 hour day.
Time and one half the regular rate for Saturday.
Double time the regular rate for Sunday.

Overtime Holidays
Double time the regular rate for work on the following holiday(s).
New Year's Day
Martin Luther King Jr. Day
President's Day
Memorial Day
Independence Day
Labor Day
Columbus Day
Veteran's Day
Thanksgiving Day
Day after Thanksgiving
Christmas Day

Paid Holidays
None

Shift Rates
Work that can only be performed outside regular working hours (seven hours of work between 7:30 A.M. and 3:30 P.M.) - First shift (work between 3:30 P.M. and 11:30 P.M.) - 10% differential above the established hourly rate. Second shift (work between 11:30 P.M. and 7:30 A.M.) - 15% differential above the established hourly rate.

For Fan Maintenance: On all full shifts of fan maintenance work the straight time hourly rate of pay will be paid for each shift, including nights, Saturdays, Sundays, and holidays.

(Local #28)

SHEET METAL WORKER - SPECIALTY
(Decking & Siding)

Sheet Metal Specialty Worker

The first worker to perform this work must be paid at the rate of the Sheet Metal Worker. The second and third workers shall be paid the Specialty Worker Rate. The ratio of One Sheet Metal Worker, then Two Specialty Workers shall be utilized thereafter.

Effective Period: 7/1/2015 - 6/30/2016
Wage Rate per Hour: $42.64
Supplemental Benefit Rate per Hour: $23.62
Supplemental Note: Supplemental benefit contributions are to be made at the applicable overtime rates.

Overtime
Time and one half the regular rate after an 8 hour day.
Time and one half the regular rate for Saturday.
Double time the regular rate for Sunday.

Overtime Holidays
Double time the regular rate for work on the following holiday(s).
New Year's Day
Martin Luther King Jr. Day
President's Day
Memorial Day
Independence Day
Labor Day
Columbus Day
Veteran's Day
Thanksgiving Day
Christmas Day

Paid Holidays
None

(Local #28)

SHIPYARD WORKER

Shipyard Mechanic - First Class

Effective Period: 7/1/2015 - 6/30/2016

Wage Rate per Hour: $23.83
Supplemental Benefit Rate per Hour: $2.87

Shipyard Mechanic - Second Class

Effective Period: 7/1/2015 - 6/30/2016
Wage Rate per Hour: $15.44
Supplemental Benefit Rate per Hour: $2.54

Shipyard Laborer - First Class

Effective Period: 7/1/2015 - 6/30/2016
Wage Rate per Hour: $19.28
Supplemental Benefit Rate per Hour: $2.69

Shipyard Laborer - Second Class

Effective Period: 7/1/2015 - 6/30/2016
Wage Rate per Hour: $12.36
Supplemental Benefit Rate per Hour: $2.43

Shipyard Dockhand - First Class

Effective Period: 7/1/2015 - 6/30/2016
Wage Rate per Hour: $22.68
Supplemental Benefit Rate per Hour: $2.82

Shipyard Dockhand - Second Class

Effective Period: 7/1/2015 - 6/30/2016
Wage Rate per Hour: $14.22
Supplemental Benefit Rate per Hour: $2.50

Overtime Description

Work performed on holiday is paid double time the regular hourly wage rate plus holiday pay.

Overtime

Time and one half the regular rate after an 8 hour day.
Time and one half the regular rate for Saturday.
Double time the regular rate for Sunday.
Time and one half the regular hourly rate after 40 hours in any work week.

Paid Holidays

New Year's Day
Martin Luther King Jr. Day
President's Day
Good Friday
Memorial Day
Independence Day

Labor Day
Thanksgiving Day
Day after Thanksgiving
Christmas Day

Based on Survey Data

SIGN ERECTOR
(Sheet Metal, Plastic, Electric, and Neon)

Sign Erector

Effective Period: 7/1/2015 - 6/30/2016
Wage Rate per Hour: $45.60
Supplemental Benefit Rate per Hour: $46.28

Overtime
Time and one half the regular rate after a 7 hour day.
Time and one half the regular rate for Saturday.
Time and one half the regular rate for Sunday.
Time and one half the regular rate for work on the following holiday(s).

Paid Holidays
New Year's Day
Washington's Birthday
Memorial Day
Independence Day
Labor Day
Columbus Day
Election Day
Thanksgiving Day
Day after Thanksgiving
Christmas Day

Shift Rates
Time and one half the regular hourly rate is to be paid for all hours worked outside the regular workday either (7:00 A.M. through 2:30 P.M.) or (8:00 A.M. through 3:30 P.M.)

(Local #137)

STEAMFITTER

Steamfitter I

Effective Period: 7/1/2015 - 6/30/2016

Wage Rate per Hour: $54.50
Supplemental Benefit Rate per Hour: $52.04
Supplemental Note: Overtime supplemental benefit rate: $103.34

Overtime
Double time the regular rate after a 7 hour day.
Double time the regular time rate for Saturday.
Double time the regular rate for Sunday.

Overtime Holidays
Double time the regular rate for work on the following holiday(s).
New Year's Day
President's Day
Memorial Day
Independence Day
Labor Day
Columbus Day
Veteran's Day
Thanksgiving Day
Day after Thanksgiving
Christmas Day

Paid Holidays
None

Shift Rates
Work performed between 3:30 P.M. and 7:00 A.M. and on Saturdays, Sundays and Holidays shall be at double time the regular hourly rate and paid at the overtime supplemental benefit rate above.

Steamfitter II

For heating, ventilation, air conditioning and mechanical public works contracts with a dollar value not to exceed $15,000,000 and for fire protection/sprinkler public works contracts not to exceed $1,500,000.

Effective Period: 7/1/2015 - 6/30/2016
Wage Rate per Hour: $54.50
Supplemental Benefit Rate per Hour: $52.04
Supplemental Note: Overtime supplemental benefit rate: $103.34

Overtime
Double time the regular rate after an 8 hour day.
Double time the regular time rate for Saturday.
Double time the regular rate for Sunday.

Overtime Holidays
Double time the regular rate for work on the following holiday(s).
New Year's Day
President's Day
Memorial Day

Independence Day
Labor Day
Columbus Day
Veteran's Day
Thanksgiving Day
Day after Thanksgiving
Christmas Day

Paid Holidays

None

Shift Rates

May be performed outside of the regular workday except Saturday, Sunday and Holidays. A shift shall consist of eight working hours. All work performed in excess of eight hours shall be paid at double time. No shift shall commence after 7:00 P.M. on Friday or 7:00 P.M. the day before holidays. All work performed after 12:01 A.M. Saturday or 12:01 A.M. the day before a Holiday will be paid at double time. When shift work is performed the wage rate for regular time worked is a thirty percent premium together with fringe benefits.

On Transit Authority projects, where work is performed in the vicinity of tracks all shift work on weekends and holidays may be performed at the regular shift rates.

Local #638

STEAMFITTER - REFRIGERATION AND AIR CONDITIONER
(Maintenance and Installation Service Person)

Refrigeration and Air Conditioner Mechanic

Effective Period: 7/1/2015 - 6/30/2016
Wage Rate per Hour: $38.80
Supplemental Benefit Rate per Hour: $13.51

Refrigeration and Air Conditioner Service Person V

Effective Period: 7/1/2015 - 6/30/2016
Wage Rate per Hour: $31.88
Supplemental Benefit Rate per Hour: $12.19

Refrigeration and Air Conditioner Service Person IV

Effective Period: 7/1/2015 - 6/30/2016
Wage Rate per Hour: $26.41
Supplemental Benefit Rate per Hour: $11.08

Refrigeration and Air Conditioner Service Person III

Filter changing and maintenance thereof, oil and greasing, tower and coil cleaning, scraping and painting, general housekeeping, taking of water samples.

Effective Period: 7/1/2015 - 6/30/2016
Wage Rate per Hour: $22.67
Supplemental Benefit Rate per Hour: $10.26

Refrigeration and Air Conditioner Service Person II

Filter changing and maintenance thereof, oil and greasing, tower and coil cleaning, scraping and painting, general housekeeping, taking of water samples.

Effective Period: 7/1/2015 - 6/30/2016
Wage Rate per Hour: $18.80
Supplemental Benefit Rate per Hour: $9.50

Refrigeration and Air Conditioner Service Person I

Filter changing and maintenance thereof, oil and greasing, tower and coil cleaning, scraping and painting, general housekeeping, taking of water samples.

Effective Period: 7/1/2015 - 6/30/2016
Wage Rate per Hour: $13.75
Supplemental Benefit Rate per Hour: $8.66

Overtime

Time and one half the regular rate after an 8 hour day.
Time and one half the regular rate for Saturday.
Double time the regular rate for Sunday.

Overtime Holidays

Double time the regular rate for work on the following holiday(s).
New Year's Day
Independence Day
Labor Day
Veteran's Day
Thanksgiving Day
Christmas Day

Double time and one half the regular rate for work on the following holiday(s).
Martin Luther King Jr. Day
President's Day
Memorial Day
Columbus Day

Paid Holidays

New Year's Day
Martin Luther King Jr. Day
President's Day
Memorial Day
Independence Day
Labor Day

Columbus Day
Veteran's Day
Thanksgiving Day
Christmas Day

(Local #638B)

STONE MASON - SETTER

Stone Mason - Setters

Effective Period: 7/1/2015 - 6/30/2016
Wage Rate per Hour: $46.56
Supplemental Benefit Rate per Hour: $36.40

Overtime
Time and one half the regular rate after a 7 hour day.
Time and one half the regular rate for Saturday.
Double time the regular rate for Sunday.

Overtime Holidays
Double time the regular rate for work on the following holiday(s).
New Year's Day
Washington's Birthday
Good Friday
Memorial Day
Independence Day
Labor Day
Thanksgiving Day
Christmas Day

Paid Holidays
1/2 day on Christmas Eve if work is performed in the A.M.

Shift Rates
For all work outside the regular workday (8:00 A.M. to 3:30 P.M. Monday through Friday), the pay shall be straight time plus a ten percent (10%) differential.

(Bricklayers District Council)

TAPER

Drywall Taper

Effective Period: 7/1/2015 - 12/29/2015
Wage Rate per Hour: $46.32

Supplemental Benefit Rate per Hour: $22.66

Effective Period: 12/30/2015 - 6/30/2016
Wage Rate per Hour: $46.82
Supplemental Benefit Rate per Hour: $22.66

Overtime
Time and one half the regular rate after a 7 hour day.
Time and one half the regular rate for Saturday.
Time and one half the regular rate for Sunday.

Overtime Holidays
Time and one half the regular rate for work on the following holiday(s).
New Year's Day
Martin Luther King Jr. Day
President's Day
Good Friday
Memorial Day
Independence Day
Labor Day
Columbus Day
Thanksgiving Day
Christmas Day

Paid Holidays
Any worker who reports to work on Christmas Eve or New Year's Eve pursuant to his employer's instruction shall be entitled to three (3) hours afternoon pay without working.

Shift Rates
Time and one half the regular rate outside the regular work hours (8:00 A.M. through 3:30 P.M.)

(Local #1974)

TELECOMMUNICATION WORKER
(Voice Installation Only)

Telecommunication Worker

Effective Period: 7/1/2015 - 6/30/2016
Wage Rate per Hour: $39.18
Supplemental Benefit Rate per Hour: $13.19
Supplemental Note: The above rate applies for Manhattan, Bronx, Brooklyn, Queens. $12.64 for Staten Island only.

Overtime
Time and one half the regular rate after a 7 hour day.
Time and one half the regular rate for Saturday.

Time and one half the regular rate for Sunday.

Overtime Holidays

Time and one half the regular rate for work on the following holiday(s).
New Year's Day
Lincoln's Birthday
Washington's Birthday
Memorial Day
Independence Day
Labor Day
Columbus Day
Election Day
Veteran's Day
Thanksgiving Day
Christmas Day

Paid Holidays

New Year's Day
Lincoln's Birthday
Washington's Birthday
Memorial Day
Independence Day
Labor Day
Columbus Day
Election Day
Veteran's Day
Thanksgiving Day
Christmas Day
Employees have the option of observing either Martin Luther King's Birthday or the day after Thanksgiving instead of Lincoln's Birthday

Shift Rates

For any workday that starts before 8A.M. or ends after 6P.M. there is a 10% differential for the applicable worker's hourly rate.

Vacation

After 6 months.....one week.
After 12 months but less than 7 years.....two weeks.
After 7 or more but less than 15 years.....three weeks.
After 15 years or more but less than 25 years.....four weeks.

(C.W.A.)

TILE FINISHER

Tile Finisher

Effective Period: 7/1/2015 - 6/30/2016
Wage Rate per Hour: $40.03
Supplemental Benefit Rate per Hour: $29.71

Overtime
Time and one half the regular rate after a 7 hour day.
Time and one half the regular rate for Saturday.
Double time the regular rate for Sunday.

Overtime Holidays
Double time the regular rate for work on the following holiday(s).
New Year's Day
President's Day
Good Friday
Memorial Day
Independence Day
Labor Day
Columbus Day
Veteran's Day
Thanksgiving Day
Day after Thanksgiving
Christmas Day

Paid Holidays
None

Shift Rates
Off shift work day (work performed outside the regular 8:00 A.M. to 3:30 P.M. workday): shift differential of one and one quarter (1¼) times the regular straight time rate of pay for the seven hours of actual off-shift work.

(Local #7)

TILE LAYER - SETTER

Tile Layer - Setter

Effective Period: 7/1/2015 - 6/30/2016
Wage Rate per Hour: $51.61
Supplemental Benefit Rate per Hour: $33.46

Overtime
Time and one half the regular rate after a 7 hour day.
Time and one half the regular rate for Saturday.
Double time the regular rate for Sunday.

Overtime Holidays
Double time the regular rate for work on the following holiday(s).
New Year's Day
President's Day
Good Friday
Memorial Day
Independence Day
Labor Day

Columbus Day
Veteran's Day
Thanksgiving Day
Day after Thanksgiving
Christmas Day

Shift Rates

Off shift work day (work performed outside the regular 8:00 A.M. to 3:30 P.M. workday): shift differential of one and one quarter (1¼) times the regular straight time rate of pay for the seven hours of actual off-shift work.

(Local #7)

TIMBERPERSON

Timberperson

Effective Period: 7/1/2015 - 6/30/2016
Wage Rate per Hour: $44.33
Supplemental Benefit Rate per Hour: $45.39

Overtime

Time and one half the regular rate after an 8 hour day.
Time and one half the regular rate for Saturday.
Double time the regular rate for Sunday.
Saturday may be used as a make-up day at straight time when a day is lost during that week to inclement weather.
Time and one half the regular hourly rate after 40 hours in any work week.

Overtime Holidays

Double time the regular rate for work on the following holiday(s).
New Year's Day
President's Day
Memorial Day
Independence Day
Labor Day
Columbus Day
Presidential Election Day
Thanksgiving Day
Christmas Day

Paid Holidays

None

Shift Rates

Off shift work commencing between 5:00 P.M. and 11:00 P.M. shall work eight and one half hours allowing for one half hour for lunch. The wage rate shall be 113% of the straight time hourly wage rate.

(Local #1536)

TUNNEL WORKER

Blasters, Mucking Machine Operators (Compressed Air Rates)

Effective Period: 7/1/2015 - 6/30/2016
Wage Rate per Hour: $56.99
Supplemental Benefit Rate per Hour: $48.55

Tunnel Workers (Compressed Air Rates)

Effective Period: 7/1/2015 - 6/30/2016
Wage Rate per Hour: $55.01
Supplemental Benefit Rate per Hour: $46.93

Top Nipper (Compressed Air Rates)

Effective Period: 7/1/2015 - 6/30/2016
Wage Rate per Hour: $54.00
Supplemental Benefit Rate per Hour: $46.12

Outside Lock Tender, Outside Gauge Tender,Muck Lock Tender (Compressed Air Rates)

Effective Period: 7/1/2015 - 6/30/2016
Wage Rate per Hour: $53.02
Supplemental Benefit Rate per Hour: $45.24

Bottom Bell & Top Bell Signal Person: Shaft Person (Compressed Air Rates)

Effective Period: 7/1/2015 - 6/30/2016
Wage Rate per Hour: $53.02
Supplemental Benefit Rate per Hour: $45.24

Changehouse Attendant: Powder Watchperson (Compressed Air Rates)

Effective Period: 7/1/2015 - 6/30/2016
Wage Rate per Hour: $46.31
Supplemental Benefit Rate per Hour: $42.86

Blasters (Free Air Rates)

Effective Period: 7/1/2015 - 6/30/2016
Wage Rate per Hour: $54.38
Supplemental Benefit Rate per Hour: $46.62

Tunnel Workers (Free Air Rates)

Effective Period: 7/1/2015 - 6/30/2016
Wage Rate per Hour: $52.04
Supplemental Benefit Rate per Hour: $44.63

All Others (Free Air Rates)

Effective Period: 7/1/2015 - 6/30/2016
Wage Rate per Hour: $48.08
Supplemental Benefit Rate per Hour: $41.31

Microtunneling (Free Air Rates)

Effective Period: 7/1/2015 - 6/30/2016
Wage Rate per Hour: $41.63
Supplemental Benefit Rate per Hour: $35.71

Overtime Description

For Repair-Maintenance Work on Existing Equipment and Facilities - Time and one half the regular rate after a 7 hour day, or for Saturday, or for Sunday. Double time the regular rate for work on a holiday.
For Small-Bore Micro Tunneling Machines - Time and one-half the regular rate shall be paid for all overtime.

Overtime

Double time the regular rate after an 8 hour day.
Double time the regular time rate for Saturday.
Double time the regular rate for Sunday.
Double time the regular rate for work on the following holiday(s).

Paid Holidays

New Year's Day
Lincoln's Birthday
President's Day
Memorial Day
Independence Day
Labor Day
Columbus Day
Election Day
Veteran's Day
Thanksgiving Day
Christmas Day

(Local #147)

WELDER
TO BE PAID AT THE RATE OF THE JOURNEYPERSON IN THE TRADE PERFORMING THE WORK.

(NO TEXT ON THIS PAGE)

OFFICE OF THE COMPTROLLER

CITY OF NEW YORK

220 APPRENTICESHIP PREVAILING WAGE SCHEDULE

APPENDIX

Pursuant to Labor Law §220 (3-e), only apprentices who are individually registered in a bona fide program to which the employer contractor is a participant and registered with the New York State Department of Labor, may be employed on a public work project.

Any employee listed on a payroll at an apprentice wage rate, who is not registered as above, shall be paid the journey person wage rate for the classification of work he actually performed.

Apprentice ratios are established to ensure the proper safety, training and supervision of apprentices. A ratio establishes the number of journey workers required for each apprentice in a program and on a job site. Ratios are interpreted as follows: in the case of a 1:1, 1:4 ratio, there must be one journey worker for the first apprentice, and four additional journey workers for each subsequent apprentice.

TABLE OF CONTENTS

CLASSIFICATION	PAGE
ASBESTOS HANDLER	3
BOILERMAKER	3
BRICKLAYER	4
CARPENTER	5
CEMENT MASON	6
CEMENT AND CONCRETE WORKER	6
DERRICKPERSON & RIGGER (STONE)	7
DOCKBUILDER/PILE DRIVER	8
ELECTRICIAN	8
ELEVATOR CONSTRUCTOR	10
ELEVATOR REPAIR & MAINTENANCE	11
ENGINEER	11
ENGINEER - OPERATING	12
FLOOR COVERER	13
GLAZIER	13
HEAT & FROST INSULATOR	14
HOUSE WRECKER	14
IRON WORKER - ORNAMENTAL	15
IRON WORKER - STRUCTURAL	16
LABORER (FOUNDATION, CONCRETE, EXCAVATING, STREET PIPE LAYER & COMMON)	17
MARBLE MECHANICS	17
MASON TENDER	19
METALLIC LATHER	19
MILLWRIGHT	20
PAVER AND ROADBUILDER	21
PAINTER	21
PAINTER - STRUCTURAL STEEL	22
PLASTERER	22
PLUMBER	23
POINTER - WATERPROOFER, CAULKER MECHANIC (EXTERIOR BUILDING RENOVATION)	24
ROOFER	25
SHEET METAL WORKER	26
SIGN ERECTOR	27
STEAMFITTER	28
STONE MASON - SETTER	29
TAPER	30
TILE LAYER - SETTER	30
TIMBERPERSON	31

ASBESTOS HANDLER
(Ratio of Apprentice Journeyperson: 1 to 1, 1 to 3)

Asbestos Handler (First 1000 Hours)

Effective Period: 7/1/2015 - 6/30/2016
Wage Rate Per Hour: 78% of Journeyperson's rate
Supplemental Benefit Rate Per Hour: $15.45
Effective 1/5/2015 - Supplemental Benefit Rate Per Hour: $15.95

Asbestos Handler (Second 1000 Hours)

Effective Period: 7/1/2015 - 6/30/2016
Wage Rate Per Hour: 80% of Journeyperson's rate
Supplemental Benefit Rate Per Hour: $15.45
Effective 1/5/2015 - Supplemental Benefit Rate Per Hour: $15.95

Asbestos Handler (Third 1000 Hours)

Effective Period: 7/1/2015 - 6/30/2016
Wage Rate Per Hour: 83% of Journeyperson's rate
Supplemental Benefit Rate Per Hour: $15.45
Effective 1/5/2015 - Supplemental Benefit Rate Per Hour: $15.95

Asbestos Handler (Fourth 1000 Hours)

Effective Period: 7/1/2015 - 6/30/2016
Wage Rate Per Hour: 89% of Journeyperson's rate
Supplemental Benefit Rate Per Hour: $15.45
Effective 1/5/2015 - Supplemental Benefit Rate Per Hour: $15.95

(Local #78)

BOILERMAKER
(Ratio of Apprentice to Journeyperson: 1 to 1, 1 to 3)

Boilermaker (First Year)

Effective Period: 7/1/2015 - 6/30/2016
Wage Rate Per Hour: 65% of Journeyperson's rate
Supplemental Benefit Rate Per Hour: $30.00

Boilermaker (Second Year: 1st Six Months)

Effective Period: 7/1/2015 - 6/30/2016

Wage Rate Per Hour: 70% of Journeyperson's rate
Supplemental Benefit Rate Per Hour: $31.66

Boilermaker (Second Year: 2nd Six Months)

Effective Period: 7/1/2015 - 6/30/2016
Wage Rate Per Hour: 75% of Journeyperson's rate
Supplemental Benefit Rate Per Hour: $33.32

Boilermaker (Third Year: 1st Six Months)

Effective Period: 7/1/2015 - 6/30/2016
Wage Rate Per Hour: 80% of Journeyperson's rate
Supplemental Benefit Rate Per Hour: $35.00

Boilermaker (Third Year: 2nd Six Months)

Effective Period: 7/1/2015 - 6/30/2016
Wage Rate Per Hour: 85% of Journeyperson's rate
Supplemental Benefit Rate Per Hour: $36.67

Boilermaker (Fourth Year: 1st Six Months)

Effective Period: 7/1/2015 - 6/30/2016
Wage Rate Per Hour: 90% of Journeyperson's rate
Supplemental Benefit Rate Per Hour: $38.34

Boilermaker (Fourth Year: 2nd Six Months)

Effective Period: 7/1/2015 - 6/30/2016
Wage Rate Per Hour: 95% of Journeyperson's rate
Supplemental Benefit Rate Per Hour: $40.01

(Local #5)

BRICKLAYER
(Ratio of Apprentice to Journeyperson: 1 to 1, 1 to 4)

Bricklayer (First 750 Hours)

Effective Period: 7/1/2015 - 6/30/2016
Wage Rate Per Hour: 50% of Journeyperson's rate
Supplemental Benefit Rate Per Hour: $17.10

Bricklayer (Second 750 Hours)

Effective Period: 7/1/2015 - 6/30/2016

Wage Rate Per Hour: 60% of Journeyperson's rate
Supplemental Benefit Rate Per Hour: $17.10

Bricklayer (Third 750 Hours)

Effective Period: 7/1/2015 - 6/30/2016
Wage Rate Per Hour: 70% of Journeyperson's rate
Supplemental Benefit Rate Per Hour: $17.10

Bricklayer (Fourth 750 Hours)

Effective Period: 7/1/2015 - 6/30/2016
Wage Rate Per Hour: 80% of Journeyperson's rate
Supplemental Benefit Rate Per Hour: $17.10

Bricklayer (Fifth 750 Hours)

Effective Period: 7/1/2015 - 6/30/2016
Wage Rate Per Hour: 90% of Journeyperson's rate
Supplemental Benefit Rate Per Hour: $17.10

Bricklayer (Sixth 750 Hours)

Effective Period: 7/1/2015 - 6/30/2016
Wage Rate Per Hour: 95% of Journeyperson's rate
Supplemental Benefit Rate Per Hour: $17.10

(Bricklayer District Council)

CARPENTER
(Ratio of Apprentice to Journeyperson: 1 to 1, 1 to 4)

Carpenter (First Year)

Effective Period: 7/1/2015 - 6/30/2016
Wage Rate Per Hour: 40% of Journeyperson's rate
Supplemental Benefit Rate Per Hour: $30.25

Carpenter (Second Year)

Effective Period: 7/1/2015 - 6/30/2016
Wage Rate Per Hour: 50% of Journeyperson's rate
Supplemental Benefit Rate Per Hour: $30.25

Carpenter (Third Year)

Effective Period: 7/1/2015 - 6/30/2016

Wage Rate Per Hour: 65% of Journeyperson's rate
Supplemental Benefit Rate Per Hour: $30.25

Carpenter (Fourth Year)

Effective Period: 7/1/2015 - 6/30/2016
Wage Rate Per Hour: 80% of Journeyperson's rate
Supplemental Benefit Rate Per Hour: $30.25

(Carpenters District Council)

CEMENT MASON
(Ratio of Apprentice to Journeyperson: 1 to 1, 1 to 4)

Cement Mason (First Year)

Effective Period: 7/1/2015 - 6/30/2016
Wage and Supplemental Rate Per Hour: 50% of Journeyperson's Rate

Cement Mason (Second Year)

Effective Period: 7/1/2015 - 6/30/2016
Wage and Supplemental Rate Per Hour: 60% of Journeyperson's Rate

Cement Mason (Third Year)

Effective Period: 7/1/2015 - 6/30/2016
Wage and Supplemental Rate Per Hour: 70% of Journeyperson's Rate

(Local #780)

CEMENT AND CONCRETE WORKER
(Ratio of Apprentice to Journeyperson: 1 to 1, 1 to 3)

Cement & Concrete Worker (0 - 500 hours)

Effective Period: 7/1/2015 - 6/30/2016
Wage Rate Per Hour: 50% of Journeyperson's rate
Supplemental Benefit Rate Per Hour: $18.04

Cement & Concrete Worker (501 - 1000 hours)

Effective Period: 7/1/2015 - 6/30/2016

Wage Rate Per Hour: 65% of Journeyperson's rate
Supplemental Benefit Rate Per Hour: $18.87

Cement & Concrete Worker (1001 - 2000 hours)

Effective Period: 7/1/2015 - 6/30/2016
Wage Rate Per Hour: 65% of Journeyperson's rate
Supplemental Benefit Rate Per Hour: $24.25

Cement & Concrete Worker (2001 - 4000 hours)

Effective Period: 7/1/2015 - 6/30/2016
Wage Rate Per Hour: 80% of Journeyperson's rate
Supplemental Benefit Rate Per Hour: $25.07

(Cement Concrete Workers District Council)

DERRICKPERSON & RIGGER (STONE)
(Ratio of Apprentice to Journeyperson: 1 to 1, 1 to 4)

Derrickperson & Rigger (stone) - First Year

Effective Period: 7/1/2015 - 6/30/2016
Wage Rate Per Hour: 50% of Journeyperson's rate
Supplemental Benefit Rate Per Hour: 50% of Journeyperson's rate

Derrickperson & Rigger (stone) - Second Year: 1st Six Months

Effective Period: 7/1/2015 - 6/30/2016
Wage Rate Per Hour: 70% of Journeyperson's rate
Supplemental Benefit Rate Per Hour: 75% of Journeyperson's rate

Derrickperson & Rigger (stone) - Second Year: 2nd Six Months

Effective Period: 7/1/2015 - 6/30/2016
Wage Rate Per Hour: 80% of Journeyperson's rate
Supplemental Benefit Rate Per Hour: 75% of Journeyperson's rate

Derrickperson & Rigger (stone) - Third Year

Effective Period: 7/1/2015 - 6/30/2016
Wage Rate Per Hour: 90% of Journeyperson's rate
Supplemental Benefit Rate Per Hour: 75% of Journeyperson's rate

(Local #197)

DOCKBUILDER/PILE DRIVER
(Ratio of Apprentice to Journeyperson: 1 to 1, 1 to 6)

Dockbuilder/Pile Driver (First Year)

Effective Period: 7/1/2015 - 6/30/2016
Wage Rate Per Hour: 40% of Journeyperson's rate
Supplemental Benefit Rate Per Hour: $31.26

Dockbuilder/Pile Driver (Second Year)

Effective Period: 7/1/2015 - 6/30/2016
Wage Rate Per Hour: 50% of Journeyperson's rate
Supplemental Benefit Rate Per Hour: $31.26

Dockbuilder/Pile Driver (Third Year)

Effective Period: 7/1/2015 - 6/30/2016
Wage Rate Per Hour: 65% of Journeyperson's rate
Supplemental Benefit Rate Per Hour: $31.26

Dockbuilder/Pile Driver (Fourth Year)

Effective Period: 7/1/2015 - 6/30/2016
Wage Rate Per Hour: 80% of Journeyperson's rate
Supplemental Benefit Rate Per Hour: $31.26

(Carpenters District Council)

ELECTRICIAN
(Ratio of Apprentice to Journeyperson: 1 to 1, 1 to 3)

Electrician (First Term: 0-6 Months)

Effective Period: 7/1/2015 - 6/30/2016
Wage Rate per Hour: $13.00
Supplemental Benefit Rate per Hour: $11.61
Overtime Supplemental Rate Per Hour: $12.47

Electrician (First Term: 7-12 Months)

Effective Period: 7/1/2015 - 6/30/2016
Wage Rate per Hour: $14.00
Supplemental Benefit Rate per Hour: $12.12

Overtime Supplemental Rate Per Hour: $13.04

Electrician (Second Term: 0-6 Months)

Effective Period: 7/1/2015 - 6/30/2016
Wage Rate per Hour: $15.00
Supplemental Benefit Rate per Hour: $12.63
Overtime Supplemental Rate Per Hour: $13.62

Electrician (Second Term: 7-12 Months)

Effective Period: 7/1/2015 - 6/30/2016
Wage Rate per Hour: $16.00
Supplemental Benefit Rate per Hour: $13.14
Overtime Supplemental Rate Per Hour: $14.19

Electrician (Third Term: 0-6 Months)

Effective Period: 7/1/2015 - 6/30/2016
Wage Rate per Hour: $17.00
Supplemental Benefit Rate per Hour: $13.65
Overtime Supplemental Rate Per Hour: $14.77

Electrician (Third Term: 7-12 Months)

Effective Period: 7/1/2015 - 6/30/2016
Wage Rate per Hour: $18.00
Supplemental Benefit Rate per Hour: $14.16
Overtime Supplemental Rate Per Hour: $15.34

Electrician (Fourth Term: 0-6 Months)

Effective Period: 7/1/2015 - 6/30/2016
Wage Rate per Hour: $19.00
Supplemental Benefit Rate per Hour: $14.67
Overtime Supplemental Rate Per Hour: $15.92

Electrician (Fourth Term: 7-12 Months)

Effective Period: 7/1/2015 - 6/30/2016
Wage Rate per Hour: $21.00
Supplemental Benefit Rate per Hour: $15.68
Overtime Supplemental Rate Per Hour: $17.07

Electrician (Fifth Term: 0-12 Months - Hired on or after 5/10/07)

Effective Period: 7/1/2015 - 6/30/2016
Wage Rate per Hour: $23.00
Supplemental Benefit Rate per Hour: $18.56

Overtime Supplemental Rate Per Hour: $20.00

Electrician (Fifth Term: 13-18 Months - Hired on or after 5/10/07)

Effective Period: 7/1/2015 - 6/30/2016
Wage Rate per Hour: $27.50
Supplemental Benefit Rate per Hour: $20.82
Overtime Supplemental Rate Per Hour: $22.54

Electrician (Fifth Term: 0-18 Months - Hired before 5/10/07)

Effective Period: 7/1/2015 - 6/30/2016
Wage Rate per Hour: $26.80
Supplemental Benefit Rate per Hour: $20.46
Overtime Supplemental Rate Per Hour: $22.14

Overtime Description

Overtime Wage paid at time and one half the regular rate
For "A" rated Apprentices (work in excess of 7 hours per day)
For "M" rated Apprentices (work in excess of 8 hours per day)

(Local #3)

ELEVATOR CONSTRUCTOR
(Ratio of Apprentice to Journeyperson: 1 to 1, 1 to 2)

Elevator (Constructor) - First Year

Effective Period: 7/1/2015 - 6/30/2016
Wage Rate Per Hour: 50% of Journeyperson's rate
Supplemental Rate Per Hour: $26.94

Elevator (Constructor) - Second Year

Effective Period: 7/1/2015 - 6/30/2016
Wage Rate Per Hour: 55% of Journeyperson's rate
Supplemental Rate Per Hour: $27.35

Elevator (Constructor) - Third Year

Effective Period: 7/1/2015 - 6/30/2016
Wage Rate Per Hour: 65% of Journeyperson's rate
Supplemental Rate Per Hour: $28.17

Elevator (Constructor) - Fourth Year

Effective Period: 7/1/2015 - 6/30/2016
Wage Rate Per Hour: 75% of Journeyperson's rate
Supplemental Rate Per Hour: $29.00

(Local #1)

ELEVATOR REPAIR & MAINTENANCE
(Ratio of Apprentice to Journeyperson: 1 to 1, 1 to 2)

Elevator Service/Modernization Mechanic (First Year)

Effective Period: 7/1/2015 - 6/30/2016
Wage Rate Per Hour: 50% of Journeyperson's rate
Supplemental Benefit Per Hour: $26.87

Elevator Service/Modernization Mechanic (Second Year)

Effective Period: 7/1/2015 - 6/30/2016
Wage Rate Per Hour: 55% of Journeyperson's rate
Supplemental Benefit Per Hour: $27.27

Elevator Service/Modernization Mechanic (Third Year)

Effective Period: 7/1/2015 - 6/30/2016
Wage Rate Per Hour: 65% of Journeyperson's rate
Supplemental Benefit Per Hour: $28.08

Elevator Service/Modernization Mechanic (Fourth Year)

Effective Period: 7/1/2015 - 6/30/2016
Wage Rate Per Hour: 75% of Journeyperson's rate
Supplemental Benefit Per Hour: $28.89

(Local #1)

ENGINEER
(Ratio of Apprentice to Journeyperson: 1 to 1, 1 to 5)

Engineer - First Year

Effective Period: 7/1/2015 - 6/30/2016
Wage Rate per Hour: $23.18
Supplemental Benefit Rate per Hour: $21.39

Engineer - Second Year

Effective Period: 7/1/2015 - 6/30/2016
Wage Rate per Hour: $28.98
Supplemental Benefit Rate per Hour: $21.39

Engineer - Third Year

Effective Period: 7/1/2015 - 6/30/2016
Wage Rate per Hour: $31.88
Supplemental Benefit Rate per Hour: $21.39

Engineer - Fourth Year

Effective Period: 7/1/2015 - 6/30/2016
Wage Rate per Hour: $34.78
Supplemental Benefit Rate per Hour: $21.39

(Local #15)

ENGINEER - OPERATING
(Ratio of Apprentice to Journeyperson: 1 to 1, 1 to 5)

Operating Engineer - First Year

Effective Period: 7/1/2015 - 6/30/2016
Wage Rate Per Hour 40% of Journeyperson's Rate
Supplemental Benefit Per Hour: $19.35

Operating Engineer - Second Year

Effective Period: 7/1/2015 - 6/30/2016
Wage Rate Per Hour: 50% of Journeyperson's Rate
Supplemental Benefit Per Hour: $19.35

Operating Engineer - Third Year

Effective Period: 7/1/2015 - 6/30/2016
Wage Rate Per Hour: 60% of Journeyperson's Rate
Supplemental Benefit Per Hour: $19.35

(Local #14)

FLOOR COVERER
(Ratio of Apprentice to Journeyperson: 1 to 1, 1 to 4)

Floor Coverer (First Year)

Effective Period: 7/1/2015 - 6/30/2016
Wage Rate Per Hour: 40% of Journeyperson's rate
Supplemental Rate Per Hour: $30.25

Floor Coverer (Second Year)

Effective Period: 7/1/2015 - 6/30/2016
Wage Rate Per Hour: 50% of Journeyperson's rate
Supplemental Rate Per Hour: $30.25

Floor Coverer (Third Year)

Effective Period: 7/1/2015 - 6/30/2016
Wage Rate Per Hour: 65% of Journeyperson's rate
Supplemental Rate Per Hour: $30.25

Floor Coverer (Fourth Year)

Effective Period: 7/1/2015 - 6/30/2016
Wage Rate Per Hour: 80% of Journeyperson's rate
Supplemental Rate Per Hour: $30.25

(Carpenters District Council)

GLAZIER
(Ratio of Apprentice to Journeyperson: 1 to 1, 1 to 3)

Glazier (First Year)

Effective Period: 7/1/2015 - 6/30/2016
Wage Rate Per Hour: 40% of Journeyperson's rate
Supplemental Rate Per Hour: $13.64
Effective 11/1/2015 - Supplemental Rate Per Hour: $13.79

Glazier (Second Year)

Effective Period: 7/1/2015 - 6/30/2016
Wage Rate Per Hour: 50% of Journeyperson's rate
Supplemental Rate Per Hour: $22.97
Effective 11/1/2015 - Supplemental Rate Per Hour: $23.13

Glazier (Third Year)

Effective Period: 7/1/2015 - 6/30/2016
Wage Rate Per Hour: 60% of Journeyperson's rate
Supplemental Rate Per Hour: $25.87
Effective 11/1/2015 - Supplemental Rate Per Hour: $26.03

Glazier (Fourth Year)

Effective Period: 7/1/2015 - 6/30/2016
Wage Rate Per Hour: 80% of Journeyperson's rate
Supplemental Rate Per Hour: $31.04
Effective 11/1/2015 - Supplemental Rate Per Hour: $31.29

(Local #1281)

HEAT & FROST INSULATOR
(Ratio of Apprentice to Journeyperson: 1 to 1, 1 to 4)

Heat & Frost Insulator (First Year)

Effective Period: 7/1/2015 - 6/30/2016
Wage and Supplemental Rate Per Hour: 40% of Journeyperson's rate

Heat & Frost Insulator (Second Year)

Effective Period: 7/1/2015 - 6/30/2016
Wage and Supplemental Rate Per Hour: 60% of Journeyperson's rate

Heat & Frost Insulator (Third Year)

Effective Period: 7/1/2015 - 6/30/2016
Wage and Supplemental Rate Per Hour: 70% of Journeyperson's rate

Heat & Frost Insulator (Fourth Year)

Effective Period: 7/1/2015 - 6/30/2016
Wage and Supplemental Rate Per Hour: 80% of Journeyperson's rate

(Local #12)

HOUSE WRECKER
(TOTAL DEMOLITION)
(Ratio of Apprentice to Journeyperson: 1 to 1, 1 to 3)

House Wrecker - First Year

Effective Period: 7/1/2015 - 6/30/2016
Wage Rate per Hour: $20.97
Supplemental Benefit Rate per Hour: $17.08

House Wrecker - Second Year

Effective Period: 7/1/2015 - 6/30/2016
Wage Rate per Hour: $22.12
Supplemental Benefit Rate per Hour: $17.08

House Wrecker - Third Year

Effective Period: 7/1/2015 - 6/30/2016
Wage Rate per Hour: $23.77
Supplemental Benefit Rate per Hour: $17.08

House Wrecker - Fourth Year

Effective Period: 7/1/2015 - 6/30/2016
Wage Rate per Hour: $26.33
Supplemental Benefit Rate per Hour: $17.08

(Mason Tenders District Council)

IRON WORKER - ORNAMENTAL
(Ratio of Apprentice to Journeyperson: 1 to 1, 1 to 4)

Iron Worker (Ornamental) - 1st Ten Months

Effective Period: 7/1/2015 - 6/30/2016
Wage Rate Per Hour: 50% of Journeyperson's rate
Supplemental Rate Per Hour: $35.75

Iron Worker (Ornamental) - 11 -16 Months

Effective Period: 7/1/2015 - 6/30/2016
Wage Rate Per Hour: 55% of Journeyperson's rate
Supplemental Rate Per Hour: $36.84

Iron Worker (Ornamental) - 17 - 22 Months

Effective Period: 7/1/2015 - 6/30/2016
Wage Rate Per Hour: 60% of Journeyperson's rate
Supplemental Rate Per Hour: $37.93

Iron Worker (Ornamental) - 23 - 28 Months

Effective Period: 7/1/2015 - 6/30/2016
Wage Rate Per Hour: 70% of Journeyperson's rate
Supplemental Rate Per Hour: $40.12

Iron Worker (Ornamental) - 29 - 36 Months

Effective Period: 7/1/2015 - 6/30/2016
Wage Rate Per Hour: 80% of Journeyperson's rate
Supplemental Rate Per Hour: $42.30

(Local #580)

IRON WORKER - STRUCTURAL
(Ratio of Apprentice to Journeyperson: 1 to 1, 1 to 6)

Iron Worker (Structural) - 1st Six Months

Effective Period: 7/1/2015 - 6/30/2016
Wage Rate per Hour: $24.98
Supplemental Benefit Rate per Hour: $45.53

Iron Worker (Structural) - 7- 18 Months

Effective Period: 7/1/2015 - 6/30/2016
Wage Rate per Hour: $25.58
Supplemental Benefit Rate per Hour: $45.53

Iron Worker (Structural) - 19 - 36 months

Effective Period: 7/1/2015 - 6/30/2016
Wage Rate per Hour: $26.18
Supplemental Benefit Rate per Hour: $45.53

(Local #40 and #361)

LABORER (FOUNDATION, CONCRETE, EXCAVATING, STREET PIPE LAYER & COMMON)

(Ratio Apprentice to Journeyperson: 1 to 1, 1 to 3)

Laborer (Foundation, Concrete, Excavating, Street Pipe Layer & Common) - First 1000 hours

Effective Period: 7/1/2015 - 6/30/2016
Wage Rate Per Hour: 50% of Journeyperson's rate
Supplemental Rate Per Hour: $36.53

Laborer (Foundation, Concrete, Excavating, Street Pipe Layer & Common) - Second 1000 hours

Effective Period: 7/1/2015 - 6/30/2016
Wage Rate Per Hour: 60% of Journeyperson's rate
Supplemental Rate Per Hour: $36.53

Laborer (Foundation, Concrete, Excavating, Street Pipe Layer & Common) - Third 1000 hours

Effective Period: 7/1/2015 - 6/30/2016
Wage Rate Per Hour: 75% of Journeyperson's rate
Supplemental Rate Per Hour: $36.53

Laborer (Foundation, Concrete, Excavating, Street Pipe Layer & Common) - Fourth 1000 hours

Effective Period: 7/1/2015 - 6/30/2016
Wage Rate Per Hour: 90% of Journeyperson's rate
Supplemental Rate Per Hour: $36.53

(Local #731)

MARBLE MECHANICS

(Ratio of Apprentice to Journeyperson: 1 to 1, 1 to 4)

Cutters & Setters - First 750 Hours

Effective Period: 7/1/2015 - 6/30/2016
Wage and Supplemental Rate Per Hour: 50% of Journeyperson's rate

NO BENEFITS PAID DURING THE FIRST TWO MONTHS (PROBATIONARY PERIOD)

Cutters & Setters - Second 750 Hours

Effective Period: 7/1/2015 - 6/30/2016
Wage and Supplemental Rate Per Hour: 55% of Journeyperson's rate

Cutters & Setters - Third 750 Hours

Effective Period: 7/1/2015 - 6/30/2016
Wage and Supplemental Rate Per Hour: 65% of Journeyperson's rate

Cutters & Setters - Fourth 750 Hours

Effective Period: 7/1/2015 - 6/30/2016
Wage and Supplemental Rate Per Hour: 75% of Journeyperson's rate

Cutters & Setters - Fifth 750 Hours

Effective Period: 7/1/2015 - 6/30/2016
Wage and Supplemental Rate Per Hour: 85% of Journeyperson's rate

Cutters & Setters - Sixth 750 Hours

Effective Period: 7/1/2015 - 6/30/2016
Wage and Supplemental Rate Per Hour: 95% of Journeyperson's rate

Polishers & Finishers - First 750 Hours

Effective Period: 7/1/2015 - 6/30/2016
Wage and Supplemental Rate Per Hour: 50% of Journeyperson's rate

NO BENEFITS PAID DURING THE FIRST TWO MONTHS (PROBATIONARY PERIOD)

Polishers & Finishers - Second 750 Hours

Effective Period: 7/1/2015 - 6/30/2016
Wage and Supplemental Rate Per Hour: 60% of Journeyperson's rate

Polishers & Finishers - Third 750 Hours

Effective Period: 7/1/2015 - 6/30/2016
Wage and Supplemental Rate Per Hour: 75% of Journeyperson's rate

Polishers & Finishers - Fourth 750 Hours

Effective Period: 7/1/2015 - 6/30/2016
Wage and Supplemental Rate Per Hour: 90% of Journeyperson's rate

(Local #7)

MASON TENDER
(Ratio of Apprentice to Journeyperson: 1 to 1, 1 to 3)

Mason Tender - First Year

Effective Period: 7/1/2015 - 6/30/2016
Wage Rate per Hour: $21.19
Supplemental Benefit Rate per Hour: $18.19

Mason Tender - Second Year

Effective Period: 7/1/2015 - 6/30/2016
Wage Rate per Hour: $22.34
Supplemental Benefit Rate per Hour: $18.19

Mason Tender - Third Year

Effective Period: 7/1/2015 - 6/30/2016
Wage Rate per Hour: $24.09
Supplemental Benefit Rate per Hour: $18.24

Mason Tender - Fourth Year

Effective Period: 7/1/2015 - 6/30/2016
Wage Rate per Hour: $26.75
Supplemental Benefit Rate per Hour: $18.24

(Local #79)

METALLIC LATHER
(Ratio of Apprentice to Journeyperson: 1 to 1, 1 to 3)

Metallic Lather (First Year -Called Prior to 6/29/11)

Effective Period: 7/1/2015 - 6/30/2016
Wage Rate per Hour: $29.41
Supplemental Benefit Rate per Hour: $22.89

Metallic Lather (Second Year - Called Prior to 6/29/11)

Effective Period: 7/1/2015 - 6/30/2016
Wage Rate per Hour: $34.01

Supplemental Benefit Rate per Hour: $24.54

Metallic Lather (Third Year - Called Prior to 6/29/11)

Effective Period: 7/1/2015 - 6/30/2016
Wage Rate per Hour: $39.07
Supplemental Benefit Rate per Hour: $25.69

Metallic Lather (First Year -Called On Or After 6/29/11)

Effective Period: 7/1/2015 - 6/30/2016
Wage Rate per Hour: $19.01
Supplemental Benefit Rate per Hour: $19.95

Metallic Lather (Second Year - Called On Or After 6/29/11)

Effective Period: 7/1/2015 - 6/30/2016
Wage Rate per Hour: $24.11
Supplemental Benefit Rate per Hour: $19.95

Metallic Lather (Third Year - Called On Or After 6/29/11)

Effective Period: 7/1/2015 - 6/30/2016
Wage Rate per Hour: $29.21
Supplemental Benefit Rate per Hour: $19.95

(Local #46)

MILLWRIGHT
(Ratio of Apprentice to Journeyperson: 1 to 1, 1 to 4)

Millwright (First Year)

Effective Period: 7/1/2015 - 6/30/2016
Wage Rate per Hour: $26.64
Supplemental Benefit Rate per Hour: $32.84

Millwright (Second Year)

Effective Period: 7/1/2015 - 6/30/2016
Wage Rate per Hour: $31.49
Supplemental Benefit Rate per Hour: $36.18

Millwright (Third Year)

Effective Period: 7/1/2015 - 6/30/2016
Wage Rate per Hour: $36.33
Supplemental Benefit Rate per Hour: $40.66

Millwright (Fourth Year)

Effective Period: 7/1/2015 - 6/30/2016
Wage Rate per Hour: $46.02
Supplemental Benefit Rate per Hour: $46.24

(Local #740)

PAVER AND ROADBUILDER
(Ratio of Apprentice to Journeyperson: 1 to 1, 1 to 3)

Paver and Roadbuilder - First Year (Minimum 1000 hours)

Effective Period: 7/1/2015 - 6/30/2016
Wage Rate per Hour: $27.05
Supplemental Benefit Rate per Hour: $17.12

Paver and Roadbuilder - Second Year (Minimum 1000 hours)

Effective Period: 7/1/2015 - 6/30/2016
Wage Rate per Hour: $28.69
Supplemental Benefit Rate per Hour: $17.12

(Local #1010)

PAINTER
(Ratio of Apprentice to Journeyperson: 1 to 1, 1 to 3)

Painter - Brush & Roller - First Year

Effective Period: 7/1/2015 - 6/30/2016
Wage Rate per Hour: $15.80
Supplemental Benefit Rate per Hour: $11.88

Painter - Brush & Roller - Second Year

Effective Period: 7/1/2015 - 6/30/2016
Wage Rate per Hour: $19.75

Supplemental Benefit Rate per Hour: $15.73

Painter - Brush & Roller - Third Year

Effective Period: 7/1/2015 - 6/30/2016
Wage Rate per Hour: $23.70
Supplemental Benefit Rate per Hour: $18.64

Painter - Brush & Roller - Fourth Year

Effective Period: 7/1/2015 - 6/30/2016
Wage Rate per Hour: $31.60
Supplemental Benefit Rate per Hour: $24.02

(District Council of Painters)

PAINTER - STRUCTURAL STEEL
(Ratio of Apprentice to Journeyperson: 1 to 1, 1 to 3)

Painters - Structural Steel (First Year)

Effective Period: 7/1/2015 - 6/30/2016
Wage and Supplemental Rate Per Hour: 40% of Journeyperson's rate

Painters - Structural Steel (Second Year)

Effective Period: 7/1/2015 - 6/30/2016
Wage and Supplemental Rate Per Hour: 60% of Journeyperson's rate

Painters - Structural Steel (Third Year)

Effective Period: 7/1/2015 - 6/30/2016
Wage and Supplemental Rate Per Hour: 80% of Journeyperson's rate

(Local #806)

PLASTERER
(Ratio of Apprentice to Journeyperson: 1 to 1, 1 to 3)

Plasterer - First Year: 1st Six Months

Effective Period: 7/1/2015 - 6/30/2016

Wage Rate Per Hour: 40% of Journeyperson's rate
Supplemental Rate Per Hour: $15.76

Plasterer - First Year: 2nd Six Months

Effective Period: 7/1/2015 - 6/30/2016
Wage Rate Per Hour: 45% of Journeyperson's rate
Supplemental Rate Per Hour: $16.24

Plasterer - Second Year: 1st Six Months

Effective Period: 7/1/2015 - 6/30/2016
Wage Rate Per Hour: 55% of Journeyperson's rate
Supplemental Rate Per Hour: $18.21

Plasterer - Second Year: 2nd Six Months

Effective Period: 7/1/2015 - 6/30/2016
Wage Rate Per Hour: 60% of Journeyperson's rate
Supplemental Rate Per Hour: $19.29

Plasterer - Third Year: 1st Six Months

Effective Period: 7/1/2015 - 6/30/2016
Wage Rate Per Hour: 70% of Journeyperson's rate
Supplemental Rate Per Hour: $21.46

Plasterer - Third Year: 2nd Six Months

Effective Period: 7/1/2015 - 6/30/2016
Wage Rate Per Hour: 75% of Journeyperson's rate
Supplemental Rate Per Hour: $22.54

(Local #530)

PLUMBER
(Ratio of Apprentice to Journeyperson: 1 to 1, 1 to 3)

Plumber - First Year: 1st Six Months

Effective Period: 7/1/2015 - 6/30/2016
Wage Rate per Hour: $14.00
Supplemental Benefit Rate per Hour: $0.71

Plumber - First Year: 2nd Six Months

Effective Period: 7/1/2015 - 6/30/2016

Wage Rate per Hour: $14.00
Supplemental Benefit Rate per Hour: $2.96

Plumber - Second Year

Effective Period: 7/1/2015 - 6/30/2016
Wage Rate per Hour: $23.87
Supplemental Benefit Rate per Hour: $12.11

Plumber - Third Year

Effective Period: 7/1/2015 - 6/30/2016
Wage Rate per Hour: $25.97
Supplemental Benefit Rate per Hour: $12.11

Plumber - Fourth Year

Effective Period: 7/1/2015 - 6/30/2016
Wage Rate per Hour: $28.82
Supplemental Benefit Rate per Hour: $12.11

Plumber - Fifth Year: 1st Six Months

Effective Period: 7/1/2015 - 6/30/2016
Wage Rate per Hour: $30.22
Supplemental Benefit Rate per Hour: $12.11

Plumber - Fifth Year: 2nd Six Months

Effective Period: 7/1/2015 - 6/30/2016
Wage Rate per Hour: $42.29
Supplemental Benefit Rate per Hour: $12.11

(Plumbers Local #1)

POINTER - WATERPROOFER, CAULKER MECHANIC (EXTERIOR BUILDING RENOVATION)

(Ratio of Apprentice to Journeyperson: 1 to 1, 1 to 4)

Pointer - Waterproofer, Caulker Mechanic - First Year

Effective Period: 7/1/2015 - 6/30/2016
Wage Rate per Hour: $25.01
Supplemental Benefit Rate per Hour: $4.75

Pointer - Waterproofer, Caulker Mechanic - Second Year

Effective Period: 7/1/2015 - 6/30/2016
Wage Rate per Hour: $27.25
Supplemental Benefit Rate per Hour: $9.70

Pointer - Waterproofer, Caulker Mechanic - Third Year

Effective Period: 7/1/2015 - 6/30/2016
Wage Rate per Hour: $32.24
Supplemental Benefit Rate per Hour: $12.45

Pointer - Waterproofer, Caulker Mechanic - Fourth Year

Effective Period: 7/1/2015 - 6/30/2016
Wage Rate per Hour: $38.66
Supplemental Benefit Rate per Hour: $12.45

(Bricklayer District Council)

ROOFER
(Ratio of Apprentice to Journeyperson: 1 to 1, 1 to 2)

Roofer - First Year

Effective Period: 7/1/2015 - 6/30/2016
Wage and Supplemental Rate Per Hour: 35% of Journeyperson's Rate

Roofer - Second Year

Effective Period: 7/1/2015 - 6/30/2016
Wage and Supplemental Rate Per Hour: 50% of Journeyperson's Rate

Roofer - Third Year

Effective Period: 7/1/2015 - 6/30/2016
Wage and Supplemental Rate Per Hour: 60% of Journeyperson's Rate

Roofer - Fourth Year

Effective Period: 7/1/2015 - 6/30/2016
Wage and Supplemental Rate Per Hour: 75% of Journeyperson's Rate

(Local #8)

SHEET METAL WORKER
(Ratio of Apprentice to Journeyperson: 1 to 1, 1 to 3)

Sheet Metal Worker (0-6 Months)

Effective Period: 7/1/2015 - 6/30/2016
Wage Rate Per Hour: 25% of Journeyperson's rate
Supplemental Rate Per Hour: $6.24

Sheet Metal Worker (7-18 Months)

Effective Period: 7/1/2015 - 6/30/2016
Wage Rate Per Hour: 35% of Journeyperson's rate
Supplemental Rate Per Hour: $16.71

Sheet Metal Worker (19-30 Months)

Effective Period: 7/1/2015 - 6/30/2016
Wage Rate Per Hour: 45% of Journeyperson's rate
Supplemental Rate Per Hour: $23.00

Sheet Metal Worker (31-36 Months)

Effective Period: 7/1/2015 - 6/30/2016
Wage Rate Per Hour: 55% of Journeyperson's rate
Supplemental Rate Per Hour: $27.02

Sheet Metal Worker (37-42 Months)

Effective Period: 7/1/2015 - 6/30/2016
Wage Rate Per Hour: 60% of Journeyperson's rate
Supplemental Rate Per Hour: $29.06

Sheet Metal Worker (43-48 Months)

Effective Period: 7/1/2015 - 6/30/2016
Wage Rate Per Hour: 70% of Journeyperson's rate
Supplemental Rate Per Hour: $33.10

Sheet Metal Worker (49-54 Months)

Effective Period: 7/1/2015 - 6/30/2016
Wage Rate Per Hour: 75% of Journeyperson's rate
Supplemental Rate Per Hour: $35.12

Sheet Metal Worker (55-60 Months)

Effective Period: 7/1/2015 - 6/30/2016
Wage Rate Per Hour: 80% of Journeyperson's rate
Supplemental Rate Per Hour: $37.15

(Local #28)

SIGN ERECTOR
(Ratio of Apprentice to Journeyperson: 1 to 1, 1 to 4)

Sign Erector - First Year: 1st Six Months

Effective Period: 7/1/2015 - 6/30/2016
Wage Rate Per Hour: 35% of Journeyperson's rate
Supplemental Rate Per Hour: $13.18

Sign Erector - First Year: 2nd Six Months

Effective Period: 7/1/2015 - 6/30/2016
Wage Rate Per Hour: 40% of Journeyperson's rate
Supplemental Rate Per Hour: $14.95

Sign Erector - Second Year: 1st Six Months

Effective Period: 7/1/2015 - 6/30/2016
Wage Rate Per Hour: 45% of Journeyperson's rate
Supplemental Rate Per Hour: $16.74

Sign Erector - Second Year: 2nd Six Months

Effective Period: 7/1/2015 - 6/30/2016
Wage Rate Per Hour: 50% of Journeyperson's rate
Supplemental Rate Per Hour: $18.52

Sign Erector - Third Year: 1st Six Months

Effective Period: 7/1/2015 - 6/30/2016
Wage Rate Per Hour: 55% of Journeyperson's rate
Supplemental Rate Per Hour: $24.94

Sign Erector - Third Year: 2nd Six Months

Effective Period: 7/1/2015 - 6/30/2016
Wage Rate Per Hour: 60% of Journeyperson's rate
Supplemental Rate Per Hour: $26.87

Sign Erector - Fourth Year: 1st Six Months

Effective Period: 7/1/2015 - 6/30/2016
Wage Rate Per Hour: 65% of Journeyperson's rate
Supplemental Rate Per Hour: $29.47

Sign Erector - Fourth Year: 2nd Six Months

Effective Period: 7/1/2015 - 6/30/2016
Wage Rate Per Hour: 70% of Journeyperson's rate
Supplemental Rate Per Hour: $31.46

Sign Erector - Fifth Year

Effective Period: 7/1/2015 - 6/30/2016
Wage Rate Per Hour: 75% of Journeyperson's rate
Supplemental Rate Per Hour: $33.43

Sign Erector - Sixth Year

Effective Period: 7/1/2015 - 6/30/2016
Wage Rate Per Hour: 80% of Journeyperson's rate
Supplemental Rate Per Hour: $35.41

(Local #137)

STEAMFITTER
(Ratio of Apprentice to Journeyperson: 1 to 1, 1 to 3)

Steamfitter - First Year

Effective Period: 7/1/2015 - 6/30/2016
Wage Rate and Supplemental Per Hour: 40% of Journeyperson's rate

Steamfitter - Second Year

Effective Period: 7/1/2015 - 6/30/2016
Wage Rate and Supplemental Rate Per Hour: 50% of Journeyperson's rate.

Steamfitter - Third Year

Effective Period: 7/1/2015 - 6/30/2016
Wage Rate and Supplemental Rate per Hour: 65% of Journeyperson's rate.

Steamfitter - Fourth Year

Effective Period: 7/1/2015 - 6/30/2016
Wage Rate and Supplemental Rate Per Hour: 80% of Journeyperson's rate.

Steamfitter - Fifth Year

Effective Period: 7/1/2015 - 6/30/2016
Wage Rate and Supplemental Rate Per Hour: 85% of Journeyperson's rate.

(Local #638)

STONE MASON - SETTER
(Ratio Apprentice of Journeyperson: 1 to 1, 1 to 2)

Stone Mason - Setters - First 750 Hours

Effective Period: 7/1/2015 - 6/30/2016
Wage and Supplemental Rate Per Hour: 50% of Journeyperson's rate

Stone Mason - Setters - Second 750 Hours

Effective Period: 7/1/2015 - 6/30/2016
Wage Rate Per Hour: 60% of Journeyperson's rate
Supplemental Rate Per Hour: 50% of Journeyperson's rate

Stone Mason - Setters - Third 750 Hours

Effective Period: 7/1/2015 - 6/30/2016
Wage Rate Per Hour: 70% of Journeyperson's rate
Supplemental Rate Per Hour: 50% of Journeyperson's rate

Stone Mason - Setters - Fourth 750 Hours

Effective Period: 7/1/2015 - 6/30/2016
Wage Rate Per Hour: 80% of Journeyperson's rate
Supplemental Rate Per Hour: 50% of Journeyperson's rate

Stone Mason - Setters - Fifth 750 Hours

Effective Period: 7/1/2015 - 6/30/2016
Wage Rate Per Hour: 90% of Journeyperson's rate
Supplemental Rate Per Hour: 50% of Journeyperson's rate

Stone Mason - Setters - Sixth 750 Hours

Effective Period: 7/1/2015 - 6/30/2016
Wage Rate Per Hour: 100% of Journeyperson's rate
Supplemental Rate Per Hour: 50% of Journeyperson's rate

(Bricklayers District Council)

TAPER
(Ratio of Apprentice to Journeyperson: 1 to 1, 1 to 4)

Drywall Taper - First Year

Effective Period: 7/1/2015 - 6/30/2016
Wage and Supplemental Rate Per Hour: 40% of Journeyperson's rate

Drywall Taper - Second Year

Effective Period: 7/1/2015 - 6/30/2016
Wage and Supplemental Rate Per Hour: 60% of Journeyperson's rate

Drywall Taper - Third Year

Effective Period: 7/1/2015 - 6/30/2016
Wage and Supplemental Rate Per Hour: 80% of Journeyperson's rate

(Local #1974)

TILE LAYER - SETTER
(Ratio of Apprentice to Journeyperson: 1 to 1, 1 to 4)

Tile Layer - Setter - First 750 Hours

Effective Period: 7/1/2015 - 6/30/2016
Wage and Supplemental Rate Per Hour: 50% of Journeyperson's rate

Tile Layer - Setter - Second 750 Hours

Effective Period: 7/1/2015 - 6/30/2016
Wage and Supplemental Rate Per Hour: 55% of Journeyperson's rate

Tile Layer - Setter - Third 750 Hours

Effective Period: 7/1/2015 - 6/30/2016
Wage and Supplemental Rate Per Hour: 65% of Journeyperson's rate

Tile Layer - Setter - Fourth 750 Hours

Effective Period: 7/1/2015 - 6/30/2016
Wage and Supplemental Rate Per Hour: 75% of Journeyperson's rate

Tile Layer - Setter - Fifth 750 Hours

Effective Period: 7/1/2015 - 6/30/2016
Wage and Supplemental Rate Per Hour: 85% of Journeyperson's rate

Tile Layer - Setter - Sixth 750 Hours

Effective Period: 7/1/2015 - 6/30/2016
Wage and Supplemental Rate Per Hour: 95% of Journeyperson's rate

(Local #7)

TIMBERPERSON
(Ratio of Apprentice to Journeyperson: 1 to 1, 1 to 6)

Timberperson - First Year

Effective Period: 7/1/2015 - 6/30/2016
Wage Rate Per Hour: 40% of Journeyperson's rate
Supplemental Rate Per Hour: $30.89

Timberperson - Second Year

Effective Period: 7/1/2015 - 6/30/2016
Wage Rate Per Hour: 50% of Journeyperson's rate
Supplemental Rate Per Hour: $30.89

Timberperson - Third Year

Effective Period: 7/1/2015 - 6/30/2016
Wage Rate Per Hour: 65% of Journeyperson's rate
Supplemental Rate Per Hour: $30.89

Timberperson - Fourth Year

Effective Period: 7/1/2015 - 6/30/2016
Wage Rate Per Hour: 80% of Journeyperson's rate
Supplemental Rate Per Hour: $30.89

(Local #1536)

(NO TEXT ON THIS PAGE)

NYC ADMINISTRATIVE CODE § 6-109 SCHEDULE OF "LIVING WAGES"

Contractors who provide the following services to the City of New York must post a copy of this Living Wage Schedule at their work site(s) as required by New York City Administrative Code § 6-109:

- Building Services,
- Day Care Services,
- Food Services,
- Head Start Services,
- Homecare Services,
- Services to Persons with Cerebral Palsy, and
- Temporary Services.

In accordance with NYC Administrative Code § 6-109, the Comptroller of the City of New York promulgated this schedule of living wages for the above services on contracts for non-emergency work in excess of the small purchase limit set by the Procurement Policy Board; contracting agencies must annex this schedule to such contracts.

This schedule is a compilation of separate determinations of the prevailing rate of wage and supplements made by the Comptroller for each trade classification listed herein pursuant to New York City Administrative Code section 6-109. The source of the wage and supplement rates, whether a collective bargaining agreement, survey data or other, is listed at the end of each classification.

A city service contractor or subcontractor that provides homecare services, day care services, head start services or services to persons with cerebral palsy must pay its covered employees that directly render such services in performance of the city service contract or subcontract no less than the living wage and must provide its employees health benefits (supplemental benefits) or must supplement their hourly wage rate by an amount no less than the health benefits supplement rate. This requirement applies for each hour that the employee works performing the city service contract or subcontract.

A city service contractor or subcontractor that provides building services, food services or temporary services must pay its employees that are engaged in performing the city service contract or subcontract no less than the living wage or the prevailing wage, whichever is greater. Where the living wage is greater than the prevailing wage, the city service contractor or subcontractor must either provide its employees health benefits or must supplement their hourly wage rate by an amount no less than the health benefits supplement rate. Where the prevailing wage is greater than the living wage, the city service contractor or subcontractor must provide its employees the prevailing wage and supplements. These requirements apply for each hour that the employee works performing the city service contract or subcontract.

The appropriate schedule of living wages must be posted at all work sites pursuant to NYC Administrative Code 6-109.

The schedule is applicable for work performed during the effective period, unless otherwise noted. You will be notified of any changes to this schedule by addenda published on our web site www.comptroller.nyc.gov. Schedules for future one-year periods will be published annually in the City Record on or about July 1st of each succeeding year and on our web site www.comptroller.nyc.gov.

The living wage rate and the health benefit supplement rate are known through June 30 of each year and those rates are listed in this schedule.

The living wage rates listed in this schedule may not include all hourly wage calculations for overtime, shift differential, Holiday, Saturday, Sunday or other premium time work. Similarly, this schedule does not set forth every living wage practice with which employers must comply.

Some of the rates in this schedule are based on collective bargaining agreements. These agreements are available for inspection by appointment. Requests for appointments may be made by calling (212) 669-4443, Monday through Friday between the hours of 9 a.m. and 5 p.m.

Answers to questions concerning prevailing wage practices may be obtained from the Classification Unit by calling (212) 669-7974. Please direct all other compliance issues to; Bureau of Labor Law, Attn: Wasyl Kinach, P.E., Office of the Comptroller, 1 Centre Street, Room 1122, New York, N.Y. 10007; Fax (212) 669-4002.

Contractors are solely responsible for maintaining original payroll records, which delineate, among other things, the hours each employee worked within a given classification. Contractors using rates and/or classifications not promulgated by the Comptroller do so at their own risk. Additionally, prior to bid, an agency's chief contracting officer must contact the Bureau of Labor Law to obtain a wage determination for a work classification not published in this schedule.

The information listed below is intended to assist you in meeting your living wage and prevailing wage obligation. Contractors are advised to review the Comptroller's Living Wage Schedule prior to submitting a bid for City work. Any wage rate error made by the contracting agency in the contract documents will not preclude a finding against the contractor for an underpayment of the applicable living wage or the applicable prevailing wage.

This schedule sets forth the living wage and benefit rates required to be annexed to and form part of the contract specifications for work covered by New York City Administrative Code § 6-109. Contractors performing such work are required to pay not less that the rates specified in this schedule for the applicable trade or occupation.

Benefits are paid for ***EACH HOUR WORKED*** unless otherwise noted.

Wasyl Kinach, P.E.
Director of Classifications
Bureau of Labor Law

TABLE OF CONTENTS

CLASSIFICATION	PAGE
BUILDING CLEANER AND MAINTAINER (OFFICE)	4
BUILDING CLEANER AND MAINTAINER (RESIDENTIAL)	4
CLEANER (PARKING GARAGE)	4
DAY CARE SERVICES	4
FOOD SERVICE EMPLOYEES	4
GARDENER	5
HEAD START SERVICES	5
HOMECARE SERVICES	5
SECURITY GUARD (ARMED)	6
SECURITY GUARD (UNARMED)	6
SERVICES TO PERSONS WITH CEREBRAL PALSY	6
TEMPORARY OFFICE SERVICES	7
WINDOW CLEANER	8

PREVAILING

BUILDING CLEANER AND MAINTAINER (OFFICE)

For the above building service classification, see the Labor Law Section 230 Schedule.

BUILDING CLEANER AND MAINTAINER (RESIDENTIAL)

For the above building service classification, see the Labor Law Section 230 Schedule.

CLEANER (PARKING GARAGE)

For the above building service classification, see the Labor Law Section 230 Schedule.

DAY CARE SERVICES

Day Care Services

'Day Care Services' means provision of day care services through the city's center-based day care program administered under contract with the city's Administration for Children's Services. No other day care programs shall be covered, including family-based day care programs administered by city-contracted day care centers.

Effective Period: 7/1/2015 - 6/30/2016
Wage Rate per Hour: $10.00
Supplemental Benefit Rate per Hour: $1.50

(NYC Administrative Code §6-109)

FOOD SERVICE EMPLOYEES

Cook

Effective Period: 7/1/2015 - 6/30/2016
Wage Rate per Hour: $16.35
Supplemental Benefit Rate per Hour: $1.63

Cafeteria Attendant

Effective Period: 7/1/2015 - 6/30/2016
Wage Rate per Hour: $10.41
Supplemental Benefit Rate per Hour: $1.63

Counter Attendant

Effective Period: 7/1/2015 - 6/30/2016
Wage Rate per Hour: $11.00
Supplemental Benefit Rate per Hour: $1.63

Kitchen Helper / Dishwasher

Effective Period: 7/1/2015 - 6/30/2016
Wage Rate per Hour: $9.99
Supplemental Benefit Rate per Hour: $1.63

Overtime

Time and one half the regular hourly rate after 40 hours in any work week.

(Based on data from NYS Department of Labor Occupational Employment Statistics and US Department of Labor Bureau of Labor Statistics)

GARDENER

For the above building service classification, see the Labor Law Section 230 Schedule.

HEAD START SERVICES

Head Start Services

'Head Start Services' means provision of head start services through the city's center-based head start program administered under contract with the city's Administration for Children's Services. No other head start programs shall be covered.

Effective Period: 7/1/2015 - 6/30/2016
Wage Rate per Hour: $10.00
Supplemental Benefit Rate per Hour: $1.50

(NYC Administrative Code §6-109)

HOMECARE SERVICES

Home Care Services

'Homecare Services' means the provision of homecare services under the city's Medicaid Personal Care/Home Attendant or Housekeeping Programs, including but not limited to the In-Home Services for the Elderly Programs administered by the Department for the Aging.
For homecare services provided under the Personal Care Services program, the wage and supplemental benefit rate above shall apply only as long as the state and federal government maintain their combined aggregate proportionate share of funding and approved rates for homecare services in effect as of the date of the enactment of this section.
For contractors or subcontractors providing homecare services, the supplemental benefit rate may be waived by the terms of a bona fide collective bargaining agreement with respect to employees who have never worked a minimum of eighty (80) hours per month for two consecutive months for that covered employer, but such provision may not be waived for any employee once a minimum of eighty (80) hours for two consecutive months has been achieved.

Effective Period: 7/1/2015 - 6/30/2016
Wage Rate per Hour: $10.00
Supplemental Benefit Rate per Hour: $1.50

(NYC Administrative Code §6-109)

SECURITY GUARD (ARMED)

For the above building service classification, see the Labor Law Section 230 Schedule.

SECURITY GUARD (UNARMED)

For the above building service classification, see the Labor Law Section 230 Schedule.

SERVICES TO PERSONS WITH CEREBRAL PALSY

Services To Person With Cerebral Palsy

'Services to Persons with Cerebral Palsy' means provision of services which enable persons with cerebral palsy and related disabilities to lead independent and productive lives through an agency that provides health care, education, employment, housing and technology resources to such persons under contract with the city or the department of education.

Effective Period: 7/1/2015 - 6/30/2016
Wage Rate per Hour: $10.00
Supplemental Benefit Rate per Hour: $1.50

(NYC Administrative Code §6-109)

TEMPORARY OFFICE SERVICES

Administrative Assistant

Effective Period: 7/1/2015 - 6/30/2016
Wage Rate per Hour: $33.29
Supplemental Benefit Rate per Hour: None

Cashier

Effective Period: 7/1/2015 - 6/30/2016
Wage Rate per Hour: $11.50
Supplemental Benefit Rate per Hour: None

Clerk (various)

Effective Period: 7/1/2015 - 6/30/2016
Wage Rate per Hour: $14.82
Supplemental Benefit Rate per Hour: None

Computer Assistant

Effective Period: 7/1/2015 - 6/30/2016
Wage Rate per Hour: $19.94
Supplemental Benefit Rate per Hour: None

Data Entry Operator

Effective Period: 7/1/2015 - 6/30/2016
Wage Rate per Hour: $16.44
Supplemental Benefit Rate per Hour: None

Receptionist

Effective Period: 7/1/2015 - 6/30/2016
Wage Rate per Hour: $15.03
Supplemental Benefit Rate per Hour: None

Secretary (various)

Effective Period: 7/1/2015 - 6/30/2016
Wage Rate per Hour: $19.31
Supplemental Benefit Rate per Hour: None

Word Processor

Effective Period: 7/1/2015 - 6/30/2016
Wage Rate per Hour: $18.49
Supplemental Benefit Rate per Hour: None

Overtime

Time and one half the regular hourly rate after 40 hours in any work week.

(Based on data from NYS Department of Labor Occupational Employment Statistics and US Department of Labor Bureau of Labor Statistics or NYC Administrative Code §6-109)

WINDOW CLEANER

For the above building service classification, see the Labor Law Section 230 Schedule.

THE CITY OF NEW YORK
OFFICE OF THE COMPTROLLER
1 CENTRE STREET ROOM 1120
NEW YORK, N.Y. 10007-2341

TELEPHONE: (212) 669-362
FAX NUMBER: (212) 669-849

Leonard A. Mancusi
SENIOR ASSISTANT COMPTROLLER

ALAN G. HEVESI
COMPTROLLER

MEMORANDUM

November 6, 2000

To ***Agency Chief Contracting Officers***

From: ***Leonard A. Mancusi***

Re: ***Security at Construction Sites***

Prior to the enactment of Administrative Code §6-109, security guards on construction sites were not subject to prevailing wages. Security guards under the New York State labor law are covered under §230 which provides that prevailing wages are to be paid for security guards in existing buildings. §6-109 of the Administrative Code which was enacted in 1996 closed this loophole by including all security guards working pursuant to a city contract as a prevailing wage trade.

Although some construction contract boilerplate language has been amended to include §6-109, sub-contractors performing security services have advised us that they were not aware of this provision and, since traditionally, security guards were not a covered trade on construction sites, and they were not advised by a prime contractor that they would have to pay prevailing wages, they have not been doing so.

To avoid the possibility of issuing stop payments against prime contractors for the failure of their security service sub-contractors to pay

prevailing wages, we suggest that you write to all your existing security guard sub-contractors and their primes and in the future, upon approval of a security guard sub-contractor, advise the contractors of their obligation to pay prevailing wages under §6-109 of the Administrative Code.

As always, your cooperation is appreciated.

LAM:er
ACCO.SECURITY AT SITES

Department of Design and Construction

INFRASTRUCTURE DIVISION
BUREAU OF DESIGN

VOLUME 2 OF 3

_____

Contractor.

_____

Dated_____, **20**_____

_____

APPROVED AS TO FORM
CERTIFIED AS TO LEGAL AUTHORITY

_____

Acting Corporation Counsel

_____

Dated_____, **20**_____

_____

Department of Design and Construction

INFRASTRUCTURE DIVISION
BUREAU OF DESIGN

VOLUME 2 OF 3

PROJECT ID: HWMM008

SAFETY AND STREETSCAPE IMPROVEMENTS
EAST 86TH STREET BETWEEN PARK AVENUE AND SECOND AVENUE

SCHOOL SAFETY NECKDOWNS
MADISON AVENUE BETWEEN EAST 84TH STREET AND EAST 85TH STREET

INCLUDING WATER MAIN, STREET LIGHTING, AND TRAFFIC SIGNAL WORK

Together With All Work Incidental Thereto

BOROUGH OF MANHATTAN
CITY OF NEW YORK

Triumph Construction Corp.
Contractor.

Dated January 8, 20 15

APPROVED AS TO FORM
CERTIFIED AS TO LEGAL AUTHORITY

Acting Corporation Counsel

SGL
5/22/2015

Dated May 22, 20 15

Department of Design and Construction

THE CITY OF NEW YORK
DEPARTMENT OF DESIGN AND CONSTRUCTION
DIVISION OF INFRASTRUCTURE

30-30 THOMSON AVENUE
LONG ISLAND CITY, NEW YORK 11101-3045
TELEPHONE (718) 391-1000
WEBSITE www.nyc.gov/buildnyc

VOLUME 3 OF 3

SCHEDULE A
ADDENDA NOS. 1 TO 5

FOR FURNISHING ALL LABOR AND MATERIALS NECESSARY AND REQUIRED FOR:

PROJECT ID: HWMM008

SAFETY AND STREETSCAPE IMPROVEMENTS
EAST 86TH STREET BETWEEN PARK AVENUE AND SECOND AVENUE

SCHOOL SAFETY NECKDOWNS
MADISON AVENUE BETWEEN EAST 84TH STREET AND EAST 85TH STREET

INCLUDING WATER MAIN, STREET LIGHTING, AND TRAFFIC SIGNAL WORK

Together With All Work Incidental Thereto

BOROUGH OF MANHATTAN
CITY OF NEW YORK

FOR THE DEPARTMENT OF TRANSPORTATION
PREPARED BY
HDR HENNINGSON DURHAM & RICHARDSON
ARCHITECTURE AND ENGINEERING PC

April 15, 2015

5-165

SPECIFICATIONS AND STANDARDS OF NEW YORK CITY

The following New York City Department of Transportation (NYCDOT) reference documents are available on-line at: http://www.nyc.gov/html/ddc/html/pubs/pubs_infrastdts.shtml or for purchase between 9:00 A.M. and 3:00 P.M. at 55 Water St., Ground Floor, NYC, N.Y. 10041. Contact: Ms Vivian Valdez, Tel. (212) 839-9434

1. NYCDOT Standard Highway Specifications, November 1, 2010
2. NYCDOT Standard Highway Details of Construction, July 1, 2010
3. NYCDOT Division of Street Lighting Specifications
4. NYCDOT Division of Street Lighting Standard Drawings
5. NYCDOT Standard Specifications for Traffic Signals
6. NYCDOT Standard Drawings for Traffic Signals

The following reference documents for New York City Department of Environmental Protection (NYCDEP) are available on-line at: http://www.nyc.gov/html/ddc/html/pubs/pubs_infrastdts.shtml or for pick up between 8:00 A.M. and 4:00 P.M. at 30-30 Thomson Avenue, 3rd Floor, Division of Infrastructure, Long Island City, N.Y. 11101.
Contact: Mr. Waqar Ahmad, Tel. (718) 391-2056

1. NYCDEP Standard Sewer and Water Main Specifications, July 1, 2014
2. NYCDEP Instructions for Concrete Specifications, Jan. 92
3. NYCDEP General Specification 11-Concrete, November 1991
4. NYCDEP Sewer Design Standards, (September 2007) Revised January 2009

The following reference documents for New York City Department of Environmental Protection (NYCDEP) are available on-line at: http://www.nyc.gov/html/ddc/html/pubs/pubs_infrastdts.shtml or for pick up between 8:00 A.M. and 4:00 P.M. at 30-30 Thomson Avenue, 3rd Floor, Division of Infrastructure, Long Island City, N.Y. 11101.
Contact: Mr. Robert Kuhlmann, Tel. (718) 391-2145

1. NYCDEP Water Main Standard Drawings
2. Specifications for Trunk Main Work, dated July 2014
3. Standards for Green Infrastructure, latest version, available only on-line at: http://www.nyc.gov/html/dep/pdf/green_infrastructure/bioswales-standard-designs.pdf

Water main work material specifications are available at the Department of Environmental Protection, 59-17 Junction Boulevard, 3rd Floor Low-Rise Building, Flushing, N.Y. 11373-5108.
Contact: Mr. Tarlock Sahansra, P.E., Tel. (718) 595-5302
E-mail: TSAHANSRA@DEP.NYC.GOV

Standard Specifications and Drawings for New York City Fire Department Communications facilities are available from the FDNY Facilities Management Bureau, Plant Operations Engineering, 316 Sgt. Beers Avenue Cluster 1 Box 16, Fort Totten, N.Y. 11359.
Contact: Mr. Ed Durkin, Tel. (718) 281-3933

Tree Planting Standards of the City of New York Parks & Recreation are available at the following Department of Parks & Recreation website: http://www.nycgovparks.org/pagefiles/53/Tree-Planting-Standards.pdf

SPECIFICATIONS AND STANDARDS OF PRIVATE UTILITIES

The Following reference document for Private Utility Work is available for pick up between 8:30 A.M. and 4:00 P.M. at 30-30 Thomson Avenue, First Floor Bid Procurement Room, L.I.C., N.Y. 11101.

1. CET SPECIFICATIONS AND SKETCHES dated November 2010

(NO TEXT ON THIS PAGE)

SCHEDULE A

(GENERAL CONDITIONS TO CONSTRUCTION CONTRACT (INCLUDING GENERAL CONDITIONS RELATED TO ARTICLE 22 – INSURANCE)

PART I. REQUIRED INFORMATION

INFORMATION FOR BIDDERS SECTION 26 BID SECURITY The **Contractor** shall obtain a bid security in the amount indicated to the right.	See Attachment 1 (page A-1 of the Bid Booklet).
INFORMATION FOR BIDDERS SECTION 26 PERFORMANCE AND PAYMENT BONDS The **Contractor** shall obtain performance and payment bonds in the amount indicated to the right.	See Attachment 1 (page A-1 of the Bid Booklet).
CONTRACT ARTICLE 14. DATE FOR SUBSTANTIAL COMPLETION The **Contractor** shall substantially complete the **Work** in the number of calendar days indicated to the right.	See Page SA-4
CONTRACT ARTICLE 15. LIQUIDATED DAMAGES If the **Contractor** fails to substantially complete the **Work** within the time fixed for substantial completion plus authorized time extensions or if the **Contractor**, in the sole determination of the **Commissioner**, has abandoned the **Work**, the **Contractor** shall pay to the **City** the amount indicated to the right.	$ 1,500. for each consecutive calendar day over substantial completion time
CONTRACT ARTICLE 17. SUB-CONTRACTOR The **Contractor** shall not make subcontracts totaling an amount more than the percentage of the total **Contract** price indicated to the right.	Not to exceed 50 % of the **Contract** price
CONTRACT ARTICLE 21. RETAINAGE The **Commissioner** shall deduct and retain until the substantial completion of the **Work** the percent value of the **Work** indicated to the right.	0 % of the value of the **Work**

CONTRACT ARTICLE 22. **(Per Directions Below)**	See pages SA-5 through SA-10
CONTRACT ARTICLE 24. **DEPOSIT GUARANTEE** As security for the faithful performance of its obligations, the **Contractor**, upon filing its requisition for payment on **Substantial Completion**, shall deposit with the **Commissioner** a sum equal to the percentage of the **Contract** price indicated to the right.	1% of **Contract** price
CONTRACT ARTICLE 24. **PERIOD OF GUARANTEE** Periods of maintenance and guarantee other than the period set forth in Article 24.1 are indicated to the right.	Twelve (12) Months, excluding Trees Twenty-four (24) Months for Tree Planting
CONTRACT ARTICLE 74. **STATEMENT OF WORK** The **Contractor** shall furnish all labor and materials and perform all **Work** in strict accordance with the **Contract Drawings**, **Specifications,** and all **Addenda** thereto.	See Contract Article 74
CONTRACT ARTICLE 75. **COMPENSATION TO BE PAID TO CONTRACTOR** The **City** shall pay and the **Contractor** shall accept in full consideration for the performance of the **Contract**, subject to additions and deductions as provided in Contract Article 75**,** this said sum being the amount at which the **Contract** was awarded to the **Contractor** at a public letting thereof, based upon the **Contractor's** bid for the **Contract.**	See Contract Article 75
CONTRACT ARTICLE 78. **PARTICIPATION BY MINORITY-OWNED AND WOMEN-OWNED BUSINESS ENTERPRISES IN CITY PROCUREMENT**	See M/WBE Utilization Plan in the Bid Booklet

STANDARD HIGHWAY SPECIFICATIONS SECTION 6.40 LIQUIDATED DAMAGES FOR ENGINEER'S FIELD OFFICE If the Contractor fails to satisfactorily provide the field office and all equipment specified in **Section 6.40 - Engineer's Field Office**, and/or if a cited deficiency exceed seventy two (72) hours after notice from the Engineer in writing, or is permitted to recur, liquidated damages will be assessed in the amount specified herein for each subsequent calendar day or part thereof that a cited deficiency resulting in nonpayment, as described in **Section 6.40.5**, is not corrected.	$ 250.00 for each calendar day of deficiency
STANDARD HIGHWAY SPECIFICATIONS SECTION 6.70 LIQUIDATED DAMAGES FOR MAINTENANCE AND PROTECTION OF TRAFFIC	$ 250.00 for each instance of failure to comply with the Maintenance and Protection of Traffic requirements within three (3) hours after written notice from the Engineer $ 500.00 for each and every hour of failing to open the entire width of roadway to traffic the morning following a night/weekend work operation
STANDARD HIGHWAY SPECIFICATIONS SECTION 7.13 LIQUIDATED DAMAGES FOR MAINTENANCE OF SITE If the Contractor fails to comply, within three (3) consecutive hours after written notice from the Engineer, with the requirements of **Section 7.13 - Maintenance of Site**, the Contractor shall pay to the City of New York, until such notice has been complied with or rescinded, the sum specified above per calendar day, for each instance of such failure, as liquidated damages and not as a penalty, for such default.	$ 250.00 for each calendar day, for each occurrence

Date for Substantial Completion (Reference: Article 14)

The Contractor shall substantially complete the Work within the Final Contract Duration determined in accordance with the terms and conditions set forth herein.

The Base Contract Duration for this project is 365 consecutive calendar days ("ccds").

The Final Contract Duration shall be the Base Contract Duration when a check mark is indicated before the word "NO", below, and shall be the Base Contract Duration adjusted by the table set forth below when a check mark is indicated before the word "YES", below.

√ YES _____ NO

When the Final Contract Duration is indicated above to be adjusted by the table below, the table may increase the Base Contract Duration depending on the date of scheduled substantial completion to avoid a scheduled substantial completion of the Work during the winter months. The date of scheduled substantial completion shall be determined by adding the Base Contract Duration to the date specified to commence work in the written Notice to Proceed. The Final Contract Duration shall then be determined as follows:

(a) Find the row that corresponds to the month of substantial completion based on the Base Contract Duration added to the date specified to commence work in the written Notice to Proceed.

(b) Find the number of days to be added to the Base Contract Duration in the table below. Add that number of days to the Base Contract Duration to obtain the Final Contract Duration in consecutive calendar days.

Month of Substantial Completion based on the Base Contract Duration	Number of Days of adjustment
January	150
February	120
March	90
April	60
May	30
June	0
July	0
August	0
September	0
October	0
November –December 15	0
December 16 – December 31	180

In addition, should Item No. 9.30, "Storm Water Pollution Prevention," exist in the Contract and the required Storm Water Pollution Prevention Plan (SWPPP) does not conform to NYSDEC's recommended Standards, an additional 60 ccd shall be added to the above Final Contract Duration.

(GENERAL CONDITIONS RELATING TO ARTICLE 22 – INSURANCE)

PART II. TYPES OF INSURANCE, MINIMUM LIMITS AND SPECIAL CONDITIONS

Note: All certificate(s) of insurance submitted pursuant to Contract Article 22.3. 3 must be accompanied by a Certification by Broker consistent with Part III below and include the following information:

- **For each insurance policy, the name and NAIC number of issuing company, number of policy, and effective dates;**
- **Policy limits consistent with the requirements listed below;**
- **Additional insureds or loss payees consistent with the requirements listed below; and**
- **The number assigned to the Contract by the City (in the "Description of Operations" field).**

Insurance indicated by a blackened box (■) or by X in a □ to left will be required under this contract

Types of Insurance (per Article 22 in its entirety, including listed paragraph)	Minimum Limits and Special Conditions
■ Commercial General Liability Art. 22.1.1	The minimum limits shall be $ 3,000,000 per Occurrence and $ 6,000,000 per project aggregate applicable to this **Contract.** Additional Insureds: 1. City of New York, including its officials and employees, with coverage at least as broad as ISO Form CG 20 10 and CG 20 37. 2. All person(s) or organization(s), if any, that Article 22.1.1(b) of the **Contract** requires to be named as Additional Insured(s), with coverage at least as broad as ISO Form CG 20 26. The Additional Insured endorsement shall either specify the entity's name, if known, or the entity's title (e.g., Project Manager). 3. The New York City Transit Authority (NYCTA), Manhattan and Bronx Surface Transit Operation Authority (MaBSTOA), Staten Island Rapid Transit Operation Authority (SIRTOA), Metropolitan Transportation Authority (MTA), its subsidiaries and affiliated companies. The Contractor shall furnish two (2) certificates of insurance to and the policy shall be endorsed to provide thirty (30) days advance notice to the Director, Risk Management, MTA Risk and Insurance Management Standards, Enforcement and Claims Unit, 2 Broadway, 21st Floor, New York, NY 10004, of any material change and/or cancellation. 4. The Metro-North Railroad (MNRR), Metropolitan Transportation Authority (MTA), Midtown TDR Ventures, LLC, & Midtown Trackage Ventures, LLC, The State of Connecticut and CT Department of Transportation (CDOT), its subsidiaries and affiliated companies. The Contractor shall furnish two (2) certificates of insurance (see pages SA-13 and SA-14) and the policy shall be endorsed to provide thirty (30) days advance notice to the Risk Manager of Insurance for the Metro-North Railroad, of any material chance and/or cancellation. 5. New York State, including its officials and employees. 6. Federal Transit Administration, including its officials and employees. 7. Consolidated Edison.

■ Workers' Compensation Art. 22.1.2 ■ Disability Benefits Insurance Art. 22.1.2 ■ Employers' Liability Art. 22.1.2 ☐ Jones Act Art. 22.1.3 ☐ U.S. Longshoremen's and Harbor Workers Compensation Act Art. 22.1.3	Workers' Compensation, Employers' Liability, and Disability Benefits Insurance: Statutory per New York State law without regard to jurisdiction. **Note:** The following forms are acceptable: (1) New York State Workers' Compensation Board Form No. C-105.2, (2) State Insurance Fund Form No. U-26.3, (3) New York State Workers' Compensation Board Form No. DB-120.1 and (4) Request for WC/DB Exemption Form No. CE-200. The City will not accept an ACORD form as proof of Workers' Compensation or Disability Insurance. Jones Act and U.S. Longshoremen's and Harbor Workers' Compensation Act: Statutory per U.S. Law. ■ Additional Requirements: (1) NYCT "OUTSIDE CONTRACT" INSURANCE REQUIREMENTS: Workers' Compensation Insurance (including Employer's Liability Insurance) with limits of not less than $2,000,000, which limit may be met by a combination of primary and excess insurance meeting the statutory limits of New York State. (2) Two (2) certificates of such insurance shall be furnished to the Director, Risk Management, MTA Risk and Insurance Management Standards, Enforcement and Claims Unit, 2 Broadway, 21st Floor, New York, NY 10004. (3) Two (2) certificates of such insurance (see pages SA-13 and SA-14) or authority for self-insurance shall be furnished to the Risk manager of Insurance for the Metro-North Railroad.

☐ Builders' Risk	Art. 22.1.4	100 % of total value of **Work** **Contractor** the Named Insured; the **City** both an Additional Insured and one of the loss payees as its interests may appear. If the **Work** does not involve construction of a new building or gut renovation work, the **Contractor** may provide an installation floater in lieu of Builders Risk insurance. Note: Builders Risk Insurance may terminate upon **Substantial Completion** of the **Work** in its entirety.
■ Commercial Auto Liability	Art. 22.1.5	$ 2,000,000 per accident combined single limit If vehicles are used for transporting hazardous materials, the **Contractor** shall provide pollution liability broadened coverage for covered vehicles (endorsement CA 99 48) as well as proof of MCS 90 Additional Insureds: (1) City of New York, including its officials and employees; (2) The New York City Transit Authority (NYCTA), Manhattan and Bronx Surface Transit Operation Authority (MaBSTOA), Staten Island Rapid Transit Operation Authority (SIRTOA), Metropolitan Transportation Authority (MTA), its subsidiaries and affiliated companies, including employees of any insured acting in the scope of their employment; (3) The Metro-North Railroad (MNRR), Metropolitan Transportation Authority (MTA), Midtown TDR Ventures, LLC, & Midtown Trackage Ventures, LLC, The State of Connecticut and CT Department of Transportation (CDOT), its subsidiaries and affiliated companies, including employees of any insured acting in the scope of their employment; (4) New York State, including its officials and employees; and, (5) Federal Transit Administration, including its officials and employees.

☐ Contractors Pollution Liability Art. 22.1.6	$_____ per occurrence $_____ aggregate Additional Insureds: 1. City of New York, including its officials and employees, and 2. _____ 3. _____
☐ Marine Protection and Indemnity Art. 22.1.7(a)	$_____ each occurrence $_____ aggregate Additional Insureds: 1. City of New York, including its officials and employees, and 2. _____ 3. _____
☐ Hull and Machinery Insurance Art. 22.1.7(b)	$_____ per occurrence $_____ aggregate Additional Insureds: 1. City of New York, including its officials and employees, and 2. _____ 3. _____
☐ Marine Pollution Liability Art. 22.1.7(c)	$_____ per occurrence $_____ aggregate Additional Insureds: 1. City of New York, including its officials and employees, and 2. _____ 3. _____

[OTHER] Art. 22.1.8 ■ Railroad Protection Liability Policy (ISO-RIMA or equivalent form) approved by Permittor covering the work to be performed at the designated site and affording protection for damages arising out of bodily injury or death, physical damage to or destruction of property, including damage to the Insured's own property and conforming to the following: • Policy Endorsement CG 28 31 - Pollution Exclusion Amendment is required to be endorsed onto the policy when environmental-related work and/or exposures exist. • Indicate the Name and address of the Contractor to perform the work, the Contract # and the name of the railroad property where the work is being performed and the Agency Permit. • Evidence of Railroad Protective Liability Insurance, must be provided in the form of the Original Policy. A detailed Insurance Binder (ACORD or Manuscript Form) will be accepted pending issuance of the Original Policy, which must be provided within 30 days of the Binder Approval.	$ 2,000,000 per occurrence $ 6,000,000 annual aggregate Named Insureds: 1. New York City Transit Authority (NYCTA), the Manhattan and Bronx Surface Transit Operation Authority (MaBSTOA), the Staten Island Rapid Transit Operation Authority (SIRTOA), MTA Capital Construction Co., the Metropolitan Transportation Authority (MTA) including its subsidiaries and affiliates, and the City of New York (as Owner) and all other indemnified parties. 2. The Metro-North Railroad (MNRR), Metropolitan Transportation Authority (MTA), Midtown TDR Ventures, LLC, & Midtown Trackage Ventures, LLC, The State of Connecticut and CT Department of Transportation (CDOT), its subsidiaries and affiliated companies.

[OTHER] Art. 22.1.8

☐ Professional Liability

A. The Contractor's Professional Engineer shall maintain and submit evidence of Professional Liability Insurance in the minimum amount of $1,000,000 per claim. The policy or policies shall include an endorsement to cover the liability assumed by the Contractor under this Contract arising out of the negligent performance of professional services or caused by an error, omission or negligent act of the Contractor's Professional Engineer or anyone employed by the Contractor's Professional Engineer.

B. Claims-made policies will be accepted for Professional Liability Insurance. All such policies shall have an extended reporting period option or automatic coverage of not less than two (2) years. If available as an option, the Contractor's Professional Engineer shall purchase extended reporting period coverage effective on cancellation or termination of such insurance unless a new policy is secured with a retroactive date, including at least the last policy year.

[OTHER] Art. 22.1.8 ■ Engineer's Field Office **Section 6.40, Standard Highway Specifications**	Fire insurance, extended coverage and vandalism, malicious mischief and burglary, and theft insurance coverage in the amount of $40,000

[OTHER] Art. 22.1.8

☐ The Following Additional Insurance Must Be Provided:

Umbrella/Excess Liability Insurance - The Contractor shall provide Umbrella/Excess Liability Insurance in the minimum amount of $10,000,000 per Occurrence and $10,000,000 in Aggregate. The policy terms and condition should be at least as broad as the underlying policies. The underlying policies should comply with the insurance provision as outlined by the contract. Defense cost should be in addition to the limit of liability. The City of New York, including its officials and employees, should be included as additional insured as respects to the noted project.

SCHEDULE A
(GENERAL CONDITIONS TO CONSTRUCTION CONTRACT)
(GENERAL CONDITIONS RELATING TO ARTICLE 22 – INSURANCE)

PART III. BROKER'S CERTIFICATION

Pursuant to Article 22.3.3 of the **Contract**, every Certificate of Insurance must be accompanied by either the following certification by the broker setting forth the following text and required information and signatures or certified copies of all policies referenced in the Certificate of Insurance.

CERTIFICATION BY BROKER

The undersigned insurance broker represents to the City of New York that the attached Certificate of Insurance is accurate in all material respects, and that the described insurance is effective as of the date of this Certification.

_____
[Name of broker (typewritten)]

_____
[Address of broker (typewritten)]

_____
[Email address of broker (typewritten)]

_____
[Phone number/Fax number of broker (typewritten)]

_____
[Signature of authorized official or broker]

_____
[Name and title of authorized official (typewritten)]

State of .....)
) ss.:
County of .....)

Sworn to before me this _____ day of _____, 20__

_____
NOTARY PUBLIC FOR THE STATE OF _____

SCHEDULE A

(GENERAL CONDITIONS TO CONSTRUCTION CONTRACT)

PART IV. ADDRESS OF COMMISSIONER

Wherever reference is made in Article 7 or Article 22 to documents to be sent to the **Commissioner** (e.g., notices, filings, or submissions), such documents shall be sent to the address set forth below or, in the absence of such address, to the **Commissioner's** address as provided elsewhere in this **Contract**.

DDC Director, Insurance Risk Manager

30 – 30 Thomson Avenue, 4th Floor (IDCNY Building)

Long Island City, NY 11101

☐ Capital Contract
☐ Operating Contract
☐ Entry Permit or Film

Metro-North Railroad
CERTIFICATE OF INSURANCE

AGREEMENT or CONTRACT #:	AGREEMENT or CONTRACT NAME/DESCRIPTION:	
INSURANCE PRODUCER: ADDRESS: PHONE #:	CERTIFICATE ISSUANCE DATE:	DATE RECEIVED BY MTA RIM: MTA REFERENCE #:

INSURED: ADDRESS: PHONE #:	CO LTR	COMPANIES AFFORDING COVERAGE
	A	
	B	
	C	
CERTIFICATE HOLDER: Metro-North Railroad/MTA Attention: Risk & Insurance Management ADDRESS: 2 Broadway 21st Floor New York, NY 10004 PHONE#: (646) 252-1430	D	
	E	
	F	
	G	

COVERAGES (See Notes 1 and 2)

CO LTR	TYPE OF INSURANCE	POLICY NUMBER	EFFECTIVE DATE	EXPIRATION DATE	LIMITS	
	GENERAL LIABILITY ☐ Comprehensive Form ☐ Underground Expl.& Collapse Hazard ☐ Products/Completed Operations ☐ Contractual Liability ☐ Independent Contractors ☐ Fifty Foot Exclusion Voided ☐ Personal & Advertising Injury ☐ SIR/Deductible $_____				BI & PD COMBINED OCCURRENCE	$
					GENERAL AGGREGATE	$
					PRODUCTS/COMPLETED OPERATIONS AGGREGATE	$
					OTHER	$
	AUTOMOBILE LIABILITY ☐ Any Auto ☐ Owned Autos ☐ Hired Autos ☐ Non-Owned Autos				BODILY INJURY (Per Occurrence)	$
					PROPERTY DAMAGE (Per Occurrence)	$
					BODILY INJURY/PROPERTY DAMAGE COMBINED SINGLE LIMIT (Each Accident)	$
	GARAGE LIABILITY ☐ Any Auto				AUTO ONLY EACH ACCIDENT	$
					OTHER THAN AUTO ONLY — EA ACC	$
					OTHER THAN AUTO ONLY — AGG	$
	EXCESS LIABILITY ☐ Umbrella Form ☐ Other Than Umbrella Form ☐ SIR/Deductible $_____				EACH OCCURRENCE	$
					AGGREGATE	$
	WORKER'S COMPENSATION AND EMPLOYER'S LIABILITY ☐ USLH ☐ Jones Act ☐ "All States" Coverage				☐ STATUTORY LIMITS	
					EMPLOYER'S LIABILITY	$
	BUILDER'S RISK				CONTRACT VALUE OF $	
	PROFESSIONAL LIABILITY ☐ Includes Pollution Liability ☐ Deductible $_____					$
	OTHER: _____					$
	OTHER: _____					$
	OTHER: _____					$

RAILROAD PROTECTIVE LIABILITY INSURANCE IS NOT ACCEPTED ON CERTIFICATE OF INSURANCE FORMS:
PROVIDE DETAILED BINDER AND/OR POLICY

CERTIFICATE OF INSURANCE **MNR** **(Continued) Page 2**

LIABILITY COVERAGES:

ADDITIONAL INSUREDS (See Note 3) Check all that apply ☒
Coverage: Commercial Liability, Garage Liability, Excess/Umbrella Liability Contractor's Pollution Liability, Pollution Legal Liability, etc.

For all MNR

- ☐ Metro-North Commuter Railroad Company
- ☐ Metropolitan Transportation Authority, including its subsidiaries and affiliates.
- ☐ Connecticut Department of Transportation (CDOT)
- ☐ The State of Connecticut
- ☐ Midtown Trackage Ventures LLC
- ☐ Midtown TDR Ventures LLC
- ☐ National Railroad Passenger Corp. (Amtrak)
- ☐ NJ Transit Rail Operations Inc.
- ☐ New Jersey Transit Corporation
- ☐ CSX Transportation Inc. & New York Central Lines LLC
- ☐ Delaware & Hudson Railway Company, Inc
- ☐ Norfolk Southern Railway Company & Pennsylvania Lines LLC
- ☐ Housatonic Railroad Company
- ☐ Providence & Worcester Railroad Company
- ☐ Danbury Terminal Railroad Co.
- ☐ Maybrook Railroad Company
- ☐ Other: _____

PROPERTY COVERAGES:

(See Note 3) Check all that apply ☒

- ☐ **NAMED INSUREDS**
  Coverage: Property, etc.
- ☐ **ADDITIONAL NAMED INSUREDS/LOSS PAYEES**
  Builder's Risk, etc.
- ☐ **LOSS PAYEES**
  Coverage: Crime Insurance, Valuable Papers

- ☐ Metro-North Commuter Railroad Company
- ☐ Metropolitan Transportation Authority, including its subsidiaries and affiliates.
- ☐ Connecticut Department of Transportation (CDOT)
- ☐ The State of Connecticut
- ☐ Midtown Trackage Ventures LLC
- ☐ Midtown TDR Ventures LLC
- ☐ National Railroad Passenger Corp. (Amtrak)
- ☐ NJ Transit Rail Operations Inc.
- ☐ New Jersey Transit Corporation
- ☐ CSX Transportation Inc. & New York Central Lines LLC
- ☐ Delaware & Hudson Railway Company, Inc
- ☐ Norfolk Southern Railway Company & Pennsylvania Lines LLC
- ☐ Housatonic Railroad Company
- ☐ Providence & Worcester Railroad Company
- ☐ Danbury Terminal Railroad Co.
- ☐ Maybrook Railroad Company
- ☐ Other: _____

NOTE 1: The subscribing insurance company(s), authorized to do business in the State of New York, certifies that insurance of the kinds and types and for limits of liability herein stated, covering the Agreement/Contract herein designated, has been procured by and furnished on behalf of the insured and is in full force and effect for the period listed on the front of this Certificate of Insurance. In addition, the subscribing insurance company(s) certifies that the insurance limits for General Liability insurance are not amended by deductible clauses of any nature except as has been disclosed to and approved by the Metro-North; and that coverage is afforded for the insured's obligations under that provision of the contract/agreement providing for indemnification of the Indemnified Parties, including the Metro-North, named therein. When applicable, any exclusion applying to construction or demolition operations on or within fifty (50) feet of a railroad (stations, yards, tracks, etc.) has been voided; and any employer liability exclusion which may otherwise operate to exclude claims for bodily injury asserted by an employee of an additional insured shall be voided.

NOTE 2: The subscribing company(s) agrees that no policy referred to herein shall be changed or canceled until thirty (30) days written notice has been sent to the following address: Metro-North Railroad/MTA c/o MTA Risk and Insurance Management Department, 2 Broadway, 21st Floor New York, NY 10004.

NOTE 3: All references to Named Insureds and Additional Insureds include those entities' directors, officers, employees, partners, agents, subsidiaries and affiliates.

NOTE 4: This certificate is issued to the Certificate Holder in consideration of the Agreement/Contract entered into with the named insured. It is understood and agreed that the certificate holder relies on the certificate as basis for continuing such Agreement/Contract with the name insured.

AUTHORIZED INSURER/PRODUCER _____

BY _____
(signature of authorized Insurer/Producer)

TITLE _____

STATE OF)
) s.s.
COUNTY OF)

On this _____ day of _____ 20___, before me personally came _____, to me known, who being duly sworn, did depose and say that he/she resides in _____, that he/she is the _____ of the corporation and described in and which executed the foregoing Certificate of Insurance, that he/she is fully authorized to execute the foregoing Certificate of Insurance.

_____
(Notary Public)

CERTIFICATES OF INSURANCE MUST BE COMPLETED BY AUTHORIZED INSURANCE REPRESENTATIVES ONLY.

ATTACH TO CONTRACT DOCUMENTS

THE CITY OF NEW YORK
DEPARTMENT OF DESIGN AND CONSTRUCTION
INFRASTRUCTURE DIVISION
BUREAU OF DESIGN

PROJECT ID: HWMM008

SAFETY AND STREETSCAPE IMPROVEMENTS
EAST 86TH STREET BETWEEN PARK AVENUE AND SECOND AVENUE

SCHOOL SAFETY NECKDOWNS
MADISON AVENUE BETWEEN EAST 84TH STREET AND EAST 85TH STREET

INCLUDING WATER MAIN, STREET LIGHTING AND TRAFFIC SIGNAL WORK

Together With All Work Incidental Thereto

BOROUGH OF MANHATTAN
CITY OF NEW YORK

ADDENDUM NO. 1

DATED: April 15, 2015

THIS ADDENDUM IS HEREBY MADE A PART OF THE CONTRACT DOCUMENTS

The New York City Department of Transportation Standard Highway Specifications, dated November 1, 2010, (which include, but are not limited to, "General Conditions", "Basic Materials of Construction", "Combined Materials of Construction", "Construction Methods", "Inspection and Testing of Materials, Adjustments for Deficiencies, and Maintenance", and "Supplemental Construction Methods"), as modified by addenda issued prior to the opening of bids, shall apply to and become a part of the contract.

All references contained herein are to the New York City Department of Transportation, Standard Highway Specifications, dated November 1, 2010. The said Specifications are hereby revised. Included hereunder are the following REVISIONS:

1. Amendments to Standard Highway Specifications, Volume I
2. Amendments to Standard Highway Specifications, Volume II, including Section 7.88 (Revised) and new Sections 6.44 PO and 6.52 CG.
3. New Sections
4. Special Provisions

1. AMENDMENTS TO STANDARD HIGHWAY SPECIFICATIONS, VOLUME I

The following amendments to the Contract Requirements shall become a part of and apply to the contract:

[Added 12-09-2010]

1. Refer to Page 15, **Subsection 1.06.23.(C) CONFORMANCE WITH FEDERAL, STATE AND CITY AGENCIES;**
   Add the following new paragraphs:

"The Contractor is notified that all vehicles that are owned, leased or operated by the Contractor or its subcontractors and used in connection with the Project shall comply with the following requirement:

Every truck, tractor, and tractor-trailer or semitrailer combination, having a gross vehicle weight rating of twenty-six thousand pounds or more, and a conventional cab configuration in which more than half of the engine length is forward of the foremost point of the windshield base, and the steering wheel hub is in the forward quarter of the vehicle length shall be equipped with a convex mirror on the front of such vehicle or combination of vehicles. Such convex mirror shall be adjusted so as to enable the operator of such vehicle or combination of vehicles to see all points on an imaginary horizontal line which is three feet above the road, is one foot directly forward from the midpoint of the front of such vehicle or combination of vehicles, and extends the full width of the front of such vehicle or combination of vehicles.

Any vehicle that does not comply with this provision may be prohibited from entering the Project site and/or supplying equipment or materials to the Project. The Contractor shall not be entitled to any damages as a result of such prohibition."

[Added 01-09-2011]

2. Refer to Page 240, **Subsection 4.16.5.(B) STUMP REMOVAL;**
   Delete **Subsection 4.16.5.(B) STUMP REMOVAL**, in its entirety:
   Substitute the following revised **Subsection 4.16.5.(B):**

"(B) STUMP REMOVAL

1. Tree stumps designated to be removed and their roots shall be completely excavated to a minimum depth of three (3) feet below the existing grade. A portable stump cutter may be required in some locations. It may be necessary to remove concrete, asphalt, pavers, and/or other types of material surrounding the base of the stump. All excess debris, including chips from tree stumps, shall be removed and disposed of by the Contractor, away from the site prior to backfilling and the area shall be restored by completion of the workday, to the satisfaction of the Engineer. The disposal of tree stumps by burning in open fires will not be permitted.

2. All voids and excavations left after the removal of the stump and roots shall be backfilled to grade with clean earth fill. Fill shall be placed and compacted to a minimum of 95 percent of Standard Proctor Maximum Density by acceptable methods to the satisfaction of the Engineer. Where paving blocks exist, they are to be reset to the existing grade as directed.

3. Maximum safety and care must be used by Contractor during stump removal. The Contractor shall carefully protect against damage all existing trees, plants, curbs, sidewalks and utilities and other features to remain. The Contractor is responsible for locating and protecting underground utilities from damage during stump removal procedures. During stump grinding operations, plywood must be used to protect adjacent vehicles, real property, and pedestrians. If, when removing stumps, existing sidewalks or curbs are disturbed, the Contractor shall restore and/or reset these sidewalks and curbs, at no additional cost to the City. Restoration work shall be done to match the existing, to the satisfaction of the Engineer. All damaged trees, curbs, sidewalks, real property, vehicles and utilities must be addressed within three (3) days."

[Added 04-18-2011]

3. Refer to Pages 218 and 219, **Subsection 4.13.4.(H) PIGMENT;**
Delete the first three (3) paragraphs on page 219:
Substitute the following revised three (3) paragraphs:

"Where the color of the concrete is required to simulate the color of dark gray bluestone, the concrete shall be integrally pigmented to produce a gray color equivalent to: Davis Colors No. 884-3%; Lansco Color No. 437 "Strong Black" 5 lbs. per 94 lbs. Light Grey Portland Cement and 3 parts sand; L.M. Scofield "Cool Black No. 4"; Bayferrox Limestone 330, 2 lbs. per 94 lbs. Light Gray Portland Cement; or an approved equivalent, unless otherwise specified.

Where the color of the concrete is required to simulate the color of light to medium gray granite, the concrete shall be integrally pigmented to produce a gray color equal to: Davis Colors No. 884-1%; Lansco Color No. 437 "Strong Black" 2.5 lbs. per 94 lbs. Light Grey Portland Cement and 3 parts sand; L.M. Scofield "Cool Black No. 1"; Bayferrox Silver 330, 1 lb. per 94 lbs. Light Gray Portland Cement; or an approved equivalent, unless otherwise specified.

Where the sidewalk is designated to have a saw cut joint finish the color of the concrete shall be integrally pigmented to produce a gray color equivalent to L.M. Scofield "Landmarks Grey" K-157-4; L.M. Scofield "Cool Black No. 4"; Davis Colors No. 884-3%; Lansco Color No. 437 "Strong Black" 5 lbs. per 94 lbs. Light Grey Portland Cement and 3 parts sand; Bayferrox NYC Landmark Commission Gray, 3.5 lbs. per 94 lbs. Light Gray Portland Cement; or an approved equivalent, unless otherwise specified."

[Added 07-01-2011]

4. Refer to Page 14, **Subsection 1.06.23.(A) PERMITS;**
Delete line (b) under the first paragraph;
Substitute the following text:

"(b) Any planned work requiring a DOT Construction Permit that may potentially be within 100 feet of a bridge structure will be placed on a Bridge Hold. If any proposed work is within 100 feet of a bridge structure, permittees must submit a scaled drawing showing the work and exact location, along with the following:

- Plan layout of the project area.
- The scope of work.
- The contractor's means and methods.
- Indicate if work will be done of the bridge itself or its abutments, and the type of work.

If the work is more than 100 feet away from the bridge structure, permittees may send a certification by e-mail stating so. Either response must be sent to the Division of Bridges at bridgeshold@dot.nyc.gov for review and release prior to commencing work. Emergency work will not be placed on hold and shall proceed in accordance with the New York City Highway Rules, section 2-11 (g);

(c) Permits from the Department of Sanitation for use of City landfills;"

[Added 07-27-2011]

5. Refer to Page 37, **Subsection 1.06.46.(A) 6. Sign Graphics;**
Delete article "a." beginning with the words "All visual components of the sign are in an Adobe *.pdf file, . . ." and ending with the words ". . . DDC to the Contractor (on a CD or via E-mail) for printing.", in its entirety;
Substitute the following revised article "a":

"a. All visual components of the sign are in an Adobe *.pdf file, which is provided by the Commissioner's representative. The file is not to be altered for composition, type font or image from the version provided by DDC. The Commissioner's representative shall provide a complete file with data and image. The digital file shall be provided by DDC to the Contractor (on a CD or via E-mail) for printing."

[Added 09-27-2012]

6. Refer to Page 36, **Subsection 1.06.46. Project Sign;**
Delete the words "Unless otherwise specified in the Special Provisions of the contract, the following shall apply:";
Substitute the following revised text:

"The Contractor is notified that he shall be required to furnish, install, maintain, and remove, when directed, Construction Project Information Signs (CPIS) as per Sec. 2-02(c)(4) and (5) of the NYC DOT Highway Rule and the cost shall be deemed included under all scheduled items of the contract. In addition, unless otherwise specified in the Special Provisions of the contract, the following Project Sign shall also apply:"

[Added 04-08-2013]

7. Refer to Page 200, **Subsection 4.11.2.(B), first paragraph, sixth line;**
Delete the word "porcelain,".

8. Refer to Page 201, **Subsection 4.11.3.(B) FILL AND BACKFILL, second and third paragraphs;**
Delete the second and third paragraphs under Subsection 4.11.3.(B), in their entirety;
Substitute the following revised two paragraphs:

"Glass or Recycled Porcelain Aggregate (RPA) from recycling facilities that meets the requirements of **Subsection 4.11.3.(E)** for Glass and **Subsection 4.11.3.(F)** for RPA shall be considered suitable material for mixing with fill provided the Contractor maintains the gradations specified herein. However, glass shall not be placed in contact with synthetic liners, geogrids, geotextiles or other geosynthetics.

Glass and/or RPA incorporated into fill shall be thoroughly mixed with other suitable material so that glass, RPA or combination of both constitutes no more than 30 percent by volume anywhere in the fill as visually determined by the Engineer."

9. Refer to Page 202, **Subsection 4.11.3.(E) GLASS;**
Add the following new **Subsection 4.11.3.(F) RECYCLED PORCELAIN AGGREGATE (RPA):**

"(F) RECYCLED PORCELAIN AGGREGATE (RPA)

All porcelain to be used as RPA shall be crushed by a New York City Department of Environmental Protection (NYCDEP) approved recycling facility to a maximum particle size of 3/8 inch and graded to meet the gradation specified above for use in either fill, backfill or select fill, as may be required. RPA from any other source will not be permitted. The NYCDEP approved recycling facility will also certify that the RPA being furnished is free from organic material and other unsuitable material.

Should the Contractor desire to use RPA in his fill or backfill material, he shall contact Mr. Vasyl Kravchyk at NYCDEP (Tel. No. 718-595-7512) to determine the availability of RPA and from which recycling facility it can be obtained.

The Contractor shall be required to make arrangement with the recycling plant, at least two (2) weeks in advance of when he would need the material, to schedule the time, date and quantity available for pickup. The Contractor shall be required to furnish the recycling facility with a complete list of his trucks involved in transporting the material, which shall include the name of the registered owner (Contractor), Consumer Affairs or DOS Permit numbers, body license plate number, and truck volume. This information must be supplied to the facility prior to the start of picking up the RPA.

Weight ticket receipt slips given by the recycling facility to each truck driver picking up RPA shall be collected by the Contractor and given to the Engineer upon delivering fill or backfill material to the site that contains RPA, and the Contractor agrees and warrants that in obtaining the RPA that such material has originated only from a NYCDEP approved recycling plant and it has not been mixed with porcelain material from any other source.

The Contractor shall be required to transport said material from the approved recycling facility to his yard for storage and mixing with his fill material; however, there is not guarantee that the material will actually be available.

The Contractor is advised that there is no guarantee that RPA will in fact be available for his use from a NYCDEP approved recycling plant and he shall make no claim against the City for loss of anticipated profits should the material not be available upon request by the Contractor.

All excess RPA not used in the fill or backfill shall remain the property of the DDC Contractor.

The Contractor must comply with all rules and regulations of the Department of Transportation and the Department of Environmental Protections governing the use of RPA in its fill and backfill material."

10. Refer to Pages 218 and 219, **Subsection 4.13.4.(H) PIGMENTING, first four paragraphs;**
Delete the first four paragraphs under Subsection 4.13.4.(H), in their entirety;
Substitute the following revised four paragraphs:

"Where pigmenting is specified, the concrete sidewalks shall be pigmented with an admixture complying with the requirements of **Section 2.19** and the following requirements:

'Commercial Gray': In commercial districts C4–4 through C4–7, C5 and C6, as defined in the Zoning Resolution of the City of New York, and in areas under the jurisdiction of the Lower Manhattan Development Corporation the color of the concrete shall be integrally pigmented to produce a gray color equivalent to L.M. Scofield 'Landmarks Grey' K-157-4; L.M. Scofield 'Cool Black No. 4'; Davis Colors No. 884-3%; Lansco Color No. 437 'Strong Black' 5 lbs. per 94 lbs. Light Grey Portland Cement and 3 parts sand; Bayferrox NYC Landmark Commission Gray, 3.5 lbs. per 94 lbs. Light Gray Portland Cement; or an approved equivalent, unless otherwise specified.

'Bluestone': Where the color of the concrete is required to simulate the color of dark gray bluestone, the concrete shall be integrally pigmented to produce a gray color equivalent to: Davis Colors No. 884-3%; Lansco Color No. 437 'Strong Black' 5 lbs. per 94 lbs. Light Grey Portland Cement and 3 parts sand; L.M. Scofield 'Cool Black No. 4'; Bayferrox Limestone 330, 2 lbs. per 94 lbs. Light Gray Portland Cement; or an approved equivalent, unless otherwise specified.

'Granite': Where the color of the concrete is required to simulate the color of light to medium gray granite, the concrete shall be integrally pigmented to produce a gray color equal to: Davis Colors No. 884-1%; Lansco Color No. 437 'Strong Black' 2.5 lbs. per 94 lbs. Light Grey Portland Cement and 3 parts sand; L.M. Scofield 'Cool Black No. 1'; Bayferrox Silver 330, 1 lb. per 94 lbs. Light Gray Portland Cement; or an approved equivalent, unless otherwise specified."

[Added 05-24-2013]

11. Refer to Page 14, **Subsection 1.06.23.(A) PERMITS**, first paragraph as modified by Article 4 on page A1-1b;
Add the following new text:

"(d) All necessary permits from the Department of Environmental Protection which may include, but are not limited to, permits for use of City water."

12. Refer to Page 14, **Subsection 1.06.23.(A) PERMITS**, second paragraph;
Add the following as the third paragraph:

"No fee permits for use of City water necessary to complete roadway pavement reconstruction project in conjunction with installation of sewers and/or water mains, will be issued by the Department of Environmental Protection. However, for all other type projects (such as installation of sidewalks, installation of pedestrian ramps, pavement milling, resurfacing, rehabilitation of retaining walls, and bridge reconstruction type projects) the Contractor will be required to obtain the water use permit at its own cost."

[Added 08-05-2013]

13. Refer to page 116, second paragraph up from the bottom of the page, first line;
Change the words "Concrete of Type IA and IIA shall have . . ." to read "Concrete of Type IA, IIA and IIIA shall have . . ."

[Added 09-04-2013]

14. Refer to page 100, **Subsection 3.01.3.(C)1.(c)**;
Delete the last two lines of text beginning with the words "The proportion of reclaimed asphalt pavement permitted within each mix . . .";
Substitute the following sentence: "The proportion of reclaimed asphalt pavement permitted within each mix shall be not less than 30 percent for the top and bottom courses as per Local Law #71 of 2011."

15. Refer to page 110, **Subsection 3.05.2.(A)**, **Table 3.05-I**;
Insert the following text at the bottom of **Table 3.05-I**:

"Note: The above proportions shown for non-High-Early mixes shall be modified by pozzolan substitutes as per **Subsection 3.05.4**."

16. Refer to page 112, **Subsection 3.05.3.(C)**, second paragraph;
Delete the second paragraph in its entirety;
Substitute the following paragraph:

"Water shall be potable and drawn from municipal water mains."

17. Refer to page 113, first line of text, beginning with the words "condition making up one (1) cubic yard of concrete.";
Insert the following sentence between the words "condition making up one (1) cubic yard of concrete." and "The range of water-cement ratio within which the . . .":

"The calculated yield of the mix shall be within ± 2% of the Theoretical one (1) cubic yard."

18. Refer to Page 113, second paragraph beginning with the words "The Contractor may substitute Portland cement . . .";
Delete the second paragraph under **Subsection 3.05.4.**, in its entirety;
Substitute the following revised paragraph:

"With the exception of high-early strength concrete, the Contractor shall be required to substitute Portland cement with pozzolans (Fly Ash or GGBFS) such that the maximum amount of Portland cement per cubic yard of concrete does not exceed 400 pounds, and with the use of an approved non-corrosive, non-chloride admixture as required to obtain a minimum compressive strength of 3,000 psi in seven (7) days. For high-early strength concrete the Contractor may substitute Portland cement with pozzolans (Fly Ash or GGBFS), pound for pound, up to 20% (or up to 25% for tidal/sea water spray areas) of the weight of cement specified for any concrete mixture provided the Contractor can obtain a minimum compressive strength of 3,000 p.s.i. in three (3) days. The Contractor, immediately following but not later than eight weeks after the date of the Contractor's Notice to Proceed, shall file with the Engineer, Age-Strength data of the job mix he proposes to use for the various ambient temperatures anticipated during the period of concrete placement. This data shall be presented in both tabular and graphical form for those various ambient temperatures with a maximum setting period of seven (7) days for Class B-32 concrete or seventy-two (72) hours for High-Early Strength Concrete."

19. Refer to Page 115, **TABLE 3.05-III - INGREDIENT MATERIALS**;
Change in the third row, second column, the type of Portland Cement from "Type III*" to read "Type II or Type III*"

20. Refer to page 132, **Subsection 3.06.3.(D)**;
Change the words "Water shall be drawn from mains owned by The City of New York." to read "Water shall be potable and drawn from municipal water mains."

21. Refer to page 133, **Subsection 3.07.3.(D)**;
Change the words "Water shall be drawn from mains owned by or supplying water to The City of New York." to read "Water shall be potable and drawn from municipal water mains."

22. Refer to page 134, **Subsection 3.08.4.(D)**;
Change the words "Water shall be drawn from mains owned by or supplying water to The City of New York." to read "Water shall be potable and drawn from municipal water mains."

23. Refer to Page 166, **Subsection 4.05.2.(A)**;
Delete **Subsection 4.05.2.(A)**, in their entirety;
Substitute the following revised **Subsection 4.05.2.(A)**:

"(A) Concrete Pavement shall be of the following types:

Type 1--Non-reinforced
Type 2--Reinforced (Unpigmented or pigmented if specified)
Type 3--High Early Strength Reinforced (Unpigmented or pigmented if specified)

Type 2 and Type 3 pavements shall consist of a concrete surface course, which shall be unpigmented or pigmented if specified, laid on a concrete base course, which may or may not be pigmented at the Contractor's option, while the base course is still plastic, of the thickness shown on the Contract Drawings, with reinforcement placed between the surface and base courses."

24. Refer to Page 166, **Subsection 4.05.3.(A)**;
Insert the following new **Subsection 4.05.3.(A1)**:

"(A1) PIGMENTING

Where pigmenting is specified, the surface course of the concrete bus pad shall be pigmented with an admixture complying with Section 2.19 and the following requirements:

Where the color of the concrete is required to simulate the red color of the Red Bus Lane Pavement Overlay (Item 6.44 POR in Section 6.44 PO), the surface course concrete shall be integrally pigmented to produce a red color equivalent to Scofield's quarry red.

Except for the use of an air-entraining agent complying with ASTM Designation C 260 and water reducing admixtures complying with ASTM Designation C 494 used in combination with the Pigment Admixture as per the pigment manufacturer's instruction, no other admixtures (including, but not limited to, calcium chloride) shall be used unless stated in writing by the manufacturer of the Pigment Admixture to be of no consequence to the colorfastness of the concrete mixture and is approved by the Engineer.

All pigmented concrete at different locations shall be identical, unless otherwise directed. Variations in color/tint/hue will not be acceptable. Therefore, the same brand and type of cement and the same source and type of aggregate shall be used throughout the project.

Prior to the mix design being made, the cement intended for use shall be checked to determine that its lightness/darkness is similar to the cement used in the original approved sample. The Pigmented Admixture shall be added in the standard proportion specified by the manufacturer."

25. Refer to Page 170, **Subsection 4.05.5.(A) GENERAL**;
Insert the following two new paragraphs:

"For pigmented concrete, the Contractor shall within eight weeks of the notice to proceed, submit the name of its proposed roadway installer upon which his bid is based, along with their respective work history experience in placing pigmented concrete. The installer shall have documented experience in working with pigmented concrete.

Prior to making any field samples and the placing of any pigmented concrete, the Contractor, its concrete supplier, installer, cement producer, laboratory, the pigmented admixture's representative, and the Engineer shall meet and agree on the specifications and methods of handling the pigmented concrete."

26. Refer to Page 183, **Subsection 4.05.9. PRICES TO COVER**, 4th line;
Insert in the fourth line, the words "pigment when specified" between the words "specifications, including, but not limited to," and "furnishing and installing . . .":

27. Refer to Page 183, **Subsection 4.05.9. PRICES TO COVER;**
Insert the following two new Items to the list of Item Nos. at the bottom of **Subsection 4.05.9:**

"4.05 ACP REINFORCED CONCETE PAVEMENT (BUS STOPS)(PIGMENTED) C.Y.

4.05 AXP HIGH-EARLY STRENGTH REINFORCED CONCRETE PAVEMENT (BUS STOPS)(PIGMENTED) C.Y."

[Added 04-15-2015]

28. Refer to Page 12, the second page of CONTRACTOR CODE OF CONDUCT;
Delete the text on page 12, in its entirety;
Substitute the revised text as contained on the following page A1-1i.

29. Refer to Page 15, Subsection 1.06.23.(B) DISPOSAL OF CONSTRUCTION WASTE;
Delete Subsection 1.06.23.(B) DISPOSAL OF CONSTRUCTION WASTE, in its entirety;
Substitute the following text:

"(B) DISPOSAL OF CONSTRUCTION WASTE

The Contractor shall dispose of all waste materials in a legal and proper manner. Should the facilities of the New York City Department of Sanitation be used, waste material shall be disposed of in accordance with the rules and regulations of the Department of Sanitation. The Contractor shall submit an affidavit to the Commissioner indicating that he has complied with said rules and regulations, the site used, and proof of purchase of dump tickets. Should the Contractor use a site other than the Department of Sanitation, the Contractor shall submit an affidavit to the Commissioner indicating that he has complied with all laws for removal of waste material, the site used, and a paid receipt. In addition, should the facilities used be located in the State of New York, it shall be a Solid Waste Management Facility registered with the New York State Department of Environmental Conservation, Division of Solid & Hazardous Materials. Failure to comply with this provision shall be deemed a material breach of this contract."

30. Refer to Pages 20 and 21, Subsection 1.06.25. Schedule of Operations;
Delete the last paragraph of Subsection 1.06.25., in its entirety;
Substitute the following paragraph:

"The Contractor shall submit weekly progress status update reports showing its anticipated work schedule for the upcoming week or as otherwise directed by the Engineer. Timely submission of these weekly progress schedules are critical for preparation of the Weekly Construction Bulletin to be prepared by the Construction Community Liaison or project staff. If the Contractor fails to submit the required anticipated work schedule, the Resident Engineer will issue a Field Order. The Contractor shall submit updated bar chart every month. The revised bar chart shall be made in the same form and detail as the original submittal and shall be accompanied by an explanation of the reasons for the revisions all of which shall be subject to approval by the Engineer."

31. Refer to Page 89, Subsection 2.26.5.;
Change the "Percent Passing" for Sieve Size No. 100 from "40-600%" to "40-60%".

Relationships with the community will be polite and helpful

- Inappropriate or foul language will not be tolerated.
- Personal and commercial deliveries will be accommodated.
- Access will always be maintained for mail delivery and the community.
- Construction personnel will be courteous to the public and will refer all questions to the Resident Engineer or Community Construction Liaison.

The community will be kept informed about the project

- An overall project schedule along with detailed information about immediate project activities will be maintained and kept up-to-date, for use by City representatives to keep the community informed of Contractor's operations.
- All 24 Hour Notifications signs prepared by the project staff in order to inform the public of impending work (i.e. water shutdowns, parking interruptions, traffic pattern changes, access restrictions, etc.) shall be posted by the Contractor in the affected geographical area as directed by the Engineer, at least 24 hours before the start of such work.

Construction will proceed in a safe manner

- Temporary walkways will be clearly marked, smooth, drained, and clear of obstacles.
- Access to active fire hydrants will be maintained.
- Equipment and vehicles will be operated at acceptable speeds and in a safe manner.
- Fencing will be maintained in an acceptable condition.
- There will be sufficient traffic control devices and they will be maintained.
- Trucks will not stand idling.
- Steel road plates will be skid-resistant.
- Flaggers will ALWAYS be used when equipment is moved into and out of congested or high-volume traffic areas.
- Temporary asphalt ramps and roadway restorations will be well maintained.

Signature of Principal of Construction Company Date

Name of Construction Company (Print)

2. AMENDMENTS TO STANDARD HIGHWAY SPECIFICATIONS, VOLUME II

[Added 01-25-2012]

1. Refer to Pages 365 and 366, **Subsection 6.40.2.(C)(c)(1) Personal Computer(s) - Workstation Configuration;**
   Delete the text under **Subsections (a), (b), (c), (d),** (h), (i), and (m), in their entirety;
   Substitute the following revised text:

"(a)	Make and Model:	Dell; HP; Gateway; Acer; or, an approved equivalent. (Note: an approved equivalent requires written approval of the Assistant Commissioner of ITS.)
(b)	Processor:	i5-2400 (6MB Cache, 3.1GHz) or faster computer - Single Processor.
(c)	System Ram:	Minimum of 4GB (Gigabytes) Dual Channel DDR3 SDRAM at 1333MHz – 2 DIMMSs
(d)	Hard Disk Drive(s):	500 GB (Gigabytes) Serial ATA (7200RPM) w/DataBurst Cache, or larger."
"(h)	Video Display Card:	HD Graphics (VGA, HDMI) with a minimum of 64 MB of RAM.
(i)	Monitor:	22" W, 23.0 Inch VIS, Widescreen, VGA/DVI LCD Monitor."
"(m)	Software Requirements:	Microsoft Windows 7 Professional SP1, 64 bit; Microsoft Office Professional 2010; Microsoft Project 2010; Adobe Acrobat reader; Anti-Virus software package with 2 year updates subscription; and, either Auto Cad 2012 LT or Microsoft Visio 2010 Standard Edition, as directed by the Engineer."

2. ~~Refer~~ to Page 366, **Subsection 6.40.2.(C)(c)(2)(b);**
   Delete ~~the~~ text under **Subsection (b)**, which begins ~~with~~ the words "(b) One (1) 600 DPI HP Laser Jet . . .", in its entirety;
   Substitute the following ~~revised text:~~

"(b) ~~One (1)~~ 600 DPI HP Color ~~Laser~~ Jet all-in-one Printer/Scanner/Copier/Fax (twelve (12) ~~pages~~ per minute or faster) with one (1) Extra Paper Tray (Legal Size) ~~networked~~ to all office computers."

3. Refer to Page 367, **Subsection 6.40.3. SPECIFIC REQUIREMENTS FOR ENGINEERS FIELD OFFICE (TYPE A, B, C, CU, D OR DU)**, first paragraph;
Delete the text in the first paragraph of **Subsection 6.40.3.**, in its entirety;
Substitute the following revised text:

6.40.3. SPECIFIC REQUIREMENTS FOR ENGINEER'S FIELD OFFICE (TYPE A, B, C, CU, D, OR DU). In addition to the general requirements, each type of Field Office shall have the minimum floor area indicated in Table 6.40-I calculated based on usable area only, excluding any loss factors. Loss factors are defined as those areas such as lobby, sidewalk window ledge, elevator shafts and stairways. The Contractor shall provide and maintain furnishings for each type of Field Office in the quantity specified in Table 6.40-I. The furnishings shall be new or used equipment satisfactory to the Engineer:

4. Refer to Page 368, TABLE 6.40-I, ADDITIONAL REQUIREMENTS SPECIFIC REQUIREMENTS;
Delete the requirements for a Photocopy Machine shown in the 15th row of TABLE 6.40-I, in its entirety;
Substitute the following revised requirements:

Photocopying Machine – Stand-alone, heavy duty, electric, dry-process color photocopying type with a minimum production rate of 70 pages per minute and an adequate supply of copy paper, toner, etc. The machine shall be capable of duplex copying paper sizes of 8-1/2 x 11 inches, 8-1/2 x 14 inches and 11 x 17 inches, and have separate trays for each paper size. It shall have a document feeder, collator, stapler, and the capability to reduce/enlarge copies between each paper size. The supply of each size copy paper, toner, etc. shall be replenished and the machines shall be maintained for the duration of the contract by the Contractor as required by the Engineer. Make and model can be Minolta, Canon, IBM, Epson, or an approved equivalent, and shall be networked to the office computers.	1	1	1	1	1	1

5. Refer to Page 368, TABLE 6.40-I, ADDITIONAL REQUIREMENTS SPECIFIC REQUIREMENTS;
Insert the following two additional requirements:

Heavy duty commercial grade diamond cut shredder with automatic start. The shredder shall be able to receive 8-1/2 inch wide paper and shred a minimum of 15 sheets simultaneously along with CDs and staples.	1	1	1	1	1	1
Projector – 1080p LCD with a min. of 2200 ANSI Lumins, 1920 x 1080, 16:9, 40,000:1 contrast ratio, HDMI, VGA, USB, and a 10 feet diagonal, 16:9 Projection Screen.	-	-	1	1	1	1

6. Refer to Page 496, Subsection **7.20.4. METHODS**, last paragraph beginning with the words "When directed by the Engineer, due to the original conditions . . .";
Add the following sentence to the end of the last paragraph under **Subsection 7.20.4:**

"However, if the owner at his own expense supplies the replacement frame and doors or hatch covers the Contractor shall install the replacement frame and doors or hatch covers under this Item 7.20, as a basement access reset, in lieu of the steel safety closure plate."

[Added 07-16-2012]

7. Refer to Page 365, **Subsection 6.40.2.(C)(c)(1) "Personal Computer(s) – Workstation Configuration";**
Delete the text under **Subsections (g) and (k),** in their entirety;
Substitute the following revised text:

"(g) I/O Ports: Must have at least one (1) Serial Port, one (1) Parallel Port, and three (3) USB Ports.

(k) Network Interface: Integrated 10/100/1000 Ethernet card."

8. Refer to Page 366, **Subsection 6.40.2.(C)(c)(2) "All field offices requiring computers shall be provided with the following:";**
Delete the text under **Subsection (a),** in its entirety;
Substitute the following revised text:

"(a) One (1) broad-band internet service account. Wideband Internet connectivity at a minimum throughput of 15 Mbps download and 5 Mbps upload is required at each field office location with 1-5 staffers. For larger field offices see table below for minimum required upload speeds. Telephone service should be bundled together with Internet connectivity. Because of throughput requirements Verizon FIOS is the preferred connectivity provider where available.

Office Personnel #	**Upload Speeds (*Minimum*)**
1 – 5	5 Mbps
6 – 10	10 Mbps
11 – 15	15 Mbps
16 – 20 …	20 Mbps

This account will be active for the life of the project. The e-mail name for the account shall be the DDC Field Office/project Id (e.g. FLD K HWK666 McGuinness@earthlink.com)."

[Added 08-09-2012]

9. Refer to Page 366, **Subsection 6.40.2.(C)(c)(2)(b)**, as amended by Article 2 on page A1-2 of this Addendum;
   Delete the text under **Subsection (b)**, in its entirety;
   Substitute the following words: "**(b) (No Text).**"

10. Refer to Page 368, TABLE 6.40-I, ADDITIONAL REQUIREMENTS SPECIFIC REQUIREMENTS;
    Delete the requirements for a Photocopy Machine shown in the 15th row of TABLE 6.40-I, as modified by Article 4 on page A1-2a of this Addendum, in its entirety;
    Substitute the following revised requirements:

Photocopying Machine – Stand-alone, heavy duty, electric, dry-process color photocopying type with color scan and send capability via e-mail, a minimum production rate of 70 pages per minute and an adequate supply of copy paper, toner, etc. The machine shall be capable of duplex copying paper sizes of 8-1/2 x 11 inches, 8-1/2 x 14 inches and 11 x 17 inches, and have separate trays for each paper size. It shall have a document feeder, collator, stapler, and the capability to reduce/enlarge copies between each paper size. The supply of each size copy paper, toner, etc. shall be replenished and the machines shall be maintained for the duration of the contract by the Contractor as required by the Engineer. Make and model can be Minolta, Canon, IBM, Epson, or an approved equivalent, and shall be networked to the office computers.	1	1	1	1	1	1

[Added 11-26-2012]

11. Refer to Pages 504 through 508, **SECTION 7.88 – Rodent and Waterbug Pest Control**;
    Delete **Section 7.88,** in its entirety;
    Substitute SECTION 7.88 (Revised), as contained on the following pages A1-2d through A1-2i.

[Added 02-08-2013]

12. (NO TEXT)

SECTION 7.88 (Revised)
Rodent and Waterbug Pest Control

7.88.1. DESCRIPTION. The Contractor shall provide all labor, materials, plant and equipment, and incidentals required to survey and monitor rodent activity and control any infestation or outbreak of rodents and waterbugs (American cockroaches) within the project limit.

7.88.2. MATERIALS. All materials shall be approved by the New York State Department of Environmental Conservation and comply with the New York City Health Code for the intended usage.

Rodenticide weatherproof bait blocks shall be multiple dose anticoagulants such as Chlorophacinone or Dephacinone, or single feed rodenticides such as ContraMeal, ContracBait block, Quintox pellets or TalonG pellets, or an approved equivalent.

Tamper proof bait station boxes shall be designed to exclude other mammals and shall be used with poisoned bait to attract rats. Information on "tamper proof bait station boxes" is available from the NYC Bureau of Regulatory & Environmental Health Services, Pest Control Office (718-956-7103/4).

Live traps shall be of proper dimensions for trapping rats and shall <u>not</u> be used with poisoned bait.

Insecticide bait shall be a residual type such as phenol methyl carbamate (2%) bait or an approved equivalent.

(A) SUBMITTALS

Prior to commencement of construction activities the Contractor shall submit to the Engineer manufacturer's installation instructions for all materials required for rodent and waterbug pest control work and product data which shall include illustrations, catalog data, product characteristics, typical use, performance, and limitation criteria of all rodent and waterbug pest control materials required.

7.88.3. PERSONNEL. The Contractor shall employ two independent licensed exterminators: one to engage in survey and monitoring work to establish the level of infestation of rodents and insects and provide recommendations for specific Integrated Pest Management (IPM) actions, and one to execute the rodent and waterbug pest control work to deal with such infestations. All pest control personnel employed by each exterminator company must be supervised by an exterminator licensed in categories 7A & 8. The Contractor shall submit the names and license credentials of the two exterminator companies to the Engineer for approval prior to the commencement of any work under this section.

7.88.4. METHODS. Application and dosage of all materials shall be done in strict compliance with the manufacturer's recommendations. All surveying, monitoring, baiting, and/or live trapping work shall be performed in the presence of the Engineer, without which no payment will be made under this Section.

(A) GENERAL

The Contractor's construction activity is expected to disturb any established rodent and/or waterbug population that may exist within the project limits, possibly causing their dispersion. The Contractor shall take all appropriate action to eliminate and/or control these populations within the construction corridor: the construction corridor shall be defined as being the full width of streets under the contract and intersecting streets up to the limits of construction, from property line to property line, excluding buildings and under sidewalk building vaults.

Under the Maintenance of Site requirements for the contract, any unsanitary conditions, such as uncollected garbage or debris, resulting from the Contractor's activities which will provide food and shelter to the resident rodent population shall be corrected by the Contractor immediately after notification of such condition by the Engineer. Non-compliance shall be subject to the application of the "Nonconformance" provisions of the Item for Maintenance of Site, and no payment will be made for any additional application of rodenticide or insecticide needed to control resultant infestations.

(B) SURVEY AND MONITORING WORK

(1) Prior to Construction - The Contractor's designated survey and monitoring exterminator shall execute a survey of the project area and estimate the level of rodent (Norway rat, House mouse) infestation and the waterbug population within the construction corridor. An appropriate sample of utility manholes (sewer, electrical, telephone, etc.) and catch basins should be opened and surveyed to the satisfaction of the Engineer. Contractor shall maintain all survey records in the manner described in 7.88.6., Records and Reports.

(2) During Construction - The Contractor shall monitor the rodent activity through trapping (snap, glue traps or live traps), fecal count methods, and inspection of the conditions of all installed baits every week during construction activity or as otherwise directed by the Engineer. Contractor shall maintain all monitoring records in the manner described in 7.88.6., Records and Reports.

(C) RODENT CONTROL WORK

(1) Wetlands, Woodlands and Areas Within Seventy-five (75') feet of a Stream. In wetlands, woodlands and areas adjacent to a stream, special precautions must be taken to protect water quality and to ensure the safety of other wildlife. To prevent poisoned bait from entering streams, no poisoned bait shall be used in areas within seventy-five (75') feet of either streambank. Live traps must be used in these seventy-five (75') feet buffer zone areas and within wetland and woodland areas.

(2) Outside Wetland Areas, Woodland Areas and Beyond Seventy-five (75') feet of a Stream. In areas outside the seventy-five foot zone of protection adjacent to streams, and areas outside wetlands and woodlands, tamper proof bait stations with poisoned bait shall be established during the period of construction and any consumed or decomposed bait shall be replenished as directed.

Rodent control shall be achieved in two stages as follows:

Stage I. At least one month prior to initiation of the construction work, and periodically thereafter, live traps and/or rodenticide bait, as directed above, shall be placed at locations [e.g., burrows, utility manholes (sewer, electrical, phone, etc.), and catch basins] that are inaccessible to pets, human beings, children and other non-target species, particularly wildlife (e.g., birds) in the construction corridor. Locations of initial bait placement and quantities of bait shall be determined by the survey and monitoring exterminator's written report of his survey and monitoring results, or as otherwise directed by the Engineer.

Stage II. During Construction - Infested sites as determined by the survey and monitoring exterminator's monitoring report shall be baited and/or rebaited, and live traps shall be collected and replaced, the rates and quantities of which shall be determined by the written monitoring reports submitted weekly or as otherwise directed by the Engineer in consultation with the City's Office of Pest Control.

The baiting exterminator shall be responsible for collecting and disposing of all trapped and poisoned rodents found in live traps and tamper proof bait stations. The baiting exterminator shall also be responsible for posting and maintaining signs announcing the baiting of each particular location.

The Contractor, under his maintenance of site operations, shall be responsible for the immediate collection and disposal of any visible rodent remains found on streets or sidewalk within the project limits. Any visible remains shall be placed into double plastic bags. No more than five (5) carcasses shall be placed into each bag. Each bag shall be a minimum of 3 mils thick, black plastic. No additional payment will be made for this work.

It is anticipated that public complaints will be addressed to the Engineer's Field Office. The Contractor, where directed by the Engineer, shall take appropriate Integrated Pest Management (IPM) actions, such as baiting, trapping, proofing, etc., to remedy the source of a complaint within the next six (6) hours of normal working time, which is defined herein, for the purposes of this section, as 7 A.M. to 6 P.M. on Mondays through Saturdays.

(D) WATERBUG (AMERICAN COCKROACH) CONTROL

Infested sites (e.g., sewers) shall be baited at least 2 times per month with insecticides, or as directed by the Engineer in consultation with the exterminator monitoring the work and the City's Office of Pest Control.

7.88.5. EDUCATION & TRAINING. The Contractor shall post notices in all Construction Bulletin Boards advising workers, employees, and residents to call the Engineer's Field Office to report rodent and waterbug infestations. The Contractor shall provide and distribute literature pertaining to IPM techniques of rodent control to affected businesses and superintendents of nearby residential buildings to ensure their participation in maintaining their establishments free of unsanitary conditions, harborage removal and rodent proofing.

Prior to application of any chemicals, the Contractor shall furnish copies or sample labels for each pesticide, antidote information, and Material Data Safety Sheets (MSDS) for each chemical used.

7.88.6. RECORDS AND REPORTS.

(A) GENERAL

The Contractor shall be responsible for assigning within the construction corridor an identifying number to each manhole, catch basin, and other location where bait and/or live trap placement and/or waterbug control work is proposed by the survey and monitoring exterminator. The Contractor shall then provide that list of locations and corresponding reference numbers along with a drawing showing the locations, as a reference for the exterminator(s) performing the work, to indicate locations of bait placement and waterbug control work and rodent and waterbug activity (droppings, bait consumed, dead rodents, etc.).

(B) SURVEY AND MONITORING WORK

(1) Prior to Construction – Contractor shall submit to the Engineer, for approval, a written survey report including proposed IPM procedures, including specific materials, quantities, locations, methods, and time schedule for the implementation of the exterminating work. The written report shall also include a survey with a drawing (provided by the Contractor) marked with locations indicating all signs of rodent (Norway rat, House mouse) infestation and waterbug activity discovered during the execution of the survey indicating that rodent and waterbug pest control work is necessary.

(2) During Construction - Based on monitoring results, Contractor shall submit to the Engineer a weekly written monitoring report identifying all locations and conditions of installed bait and/or other rodent control work. The monitoring report shall also include any other recommended IPM techniques, such as baiting, trapping, proofing, etc., proposed for rodent and waterbug pest control.

The survey and monitoring exterminator shall keep a record of all rodent and waterbug infestation surveys s/he has conducted. The Contractor shall be required to submit a copy of all survey and monitoring reports to the Engineer each week, prior to payment.

(C) RODENT AND WATERBUG CONTROL WORK

The baiting exterminator shall maintain records of all locations baited along with the type and quantity of rodenticide and insecticide bait used. These records will be kept by the City Inspector. A weekly report shall be prepared, signed and certified by the approved licensed exterminator, and such reports shall be submitted to the Engineer each week, prior to payment.

7.88.7. NONCONFORMANCE. If the Contractor fails to perform as directed to control the rodent and/or waterbug population at any location within the project limits for a period of more than one week, the Engineer will correct the adverse conditions by any means he deems appropriate, including but not limited to, the use of "outside services" and shall deduct the cost of the corrective work from any monies due to the Contractor. The deducted cost of this work shall be in addition to the non-payment for rodent and waterbug pest control.

7.88.8. MEASUREMENT.

(A) RODENT INFESTATION SURVEY AND MONITORING

The quantity to be measured for payment under Item No. 7.88 AA, RODENT INFESTATION SURVEY AND MONITORING, shall be a Lump Sum measurement.

(B) RODENT BAIT STATIONS

The quantity to be measured for payment under Item No. 7.88 AB, RODENT BAIT STATIONS, shall be the number of tamper-proof rodent bait station boxes and/or live traps satisfactorily installed or reinstalled after inspection within the construction corridor, as approved by the Engineer. However, the initial baiting, and subsequent rebaiting as may be required, of any bait station will be paid for under Item 7.88 AC.

(C) BAITING OF RODENT BAIT STATIONS

The quantity to be measured for payment under Item No. 7.88 AC, BAITING OF RODENT BAIT STATIONS, shall be the number of tamper-proof rodent bait station boxes, utility manholes, catch basins, or other locations approved by the Engineer, satisfactorily baited or rebaited to replenish consumed or decomposed bait within the construction corridor, as approved by the Engineer.

(D) WATERBUG BAIT APPLICATION

The quantity to be measured for payment under Item No. 7.88 AD, WATERBUG BAIT APPLICATIONS, shall be the number of blocks satisfactorily treated with insecticide bait within the construction corridor, as approved by the Engineer. A block shall be defined as the area of street, measured between property lines, from intersection to intersection. Each rebaiting of any block shall be considered as a new block for measurement purposes.

7.88.9. PRICES TO COVER.

(A) RODENT INFESTATION SURVEY AND MONITORING

Payment will be made at the lump sum price bid for RODENT INFESTATION SURVEY AND MONITORING which shall include the cost of furnishing all the labor, materials, plant, equipment (traps, etc.), insurance, and other incidentals required, including but not limited to providing all required maintenance of traffic equipment, to perform a rodent infestation survey of the project area and then monitor the site each week for rodent activity, all in accordance with the specifications and the directions of the Engineer.

Ten (10%) percent of the lump sum price bid will be paid when the initial survey of the project area has been completed and the written survey report has been submitted to the satisfaction of the Engineer. The remainder will be paid in proportion to the percentage of contract completion.

(B) RODENT BAIT STATIONS

The Contract price bid for RODENT BAIT STATIONS shall be a unit price per each tamper proof bait station box and/ or live trap installed or reinstalled after inspection and shall cover the cost of furnishing all labor, materials, plant, equipment (bait stations, etc.), insurance, and other incidentals, including but not limited to providing all required maintenance of traffic equipment, required to control the rodent population found within the project limits in accordance with the specifications and the directions of the Engineer.

In addition to the payment for Rodent Bait Stations installed or reinstalled under this Item 7.88 AB, the Contractor will also be paid for each baiting or rebaiting, when required, of each bait station, under Item No. 7.88 AC.

(C) BAITING OF RODENT BAIT STATIONS

The Contract price bid for BAITING OF RODENT BAIT STATIONS shall be a unit price per each bait station, utility manhole, catch basin or other location approved by the Engineer satisfactorily baited or rebaited, when required, and shall cover the cost of furnishing all labor, materials, plant, equipment (bait), insurance, and other incidentals, in accordance with the specifications and directions of the Engineer. Installation or resetting of the bait station will be paid for under Item 7.88 AB.

(D) WATERBUG BAIT APPLICATION

The Contract price bid for WATERBUG BAIT APPLICATION shall be a unit price per block treated by the exterminator and shall include the cost of furnishing all the labor, materials, plant, equipment (bait, etc.), insurance, and other incidentals, including but not limited to providing all required maintenance of traffic equipment, necessary to control the waterbug population found within the project limits for the duration of the contract in accordance with the specifications and the directions of the Engineer.

Payment will be made under:

Item No.	Item	Pay Unit
7.88 AA	RODENT INFESTATION SURVEY AND MONITORING	L.S.
7.88 AB	RODENT BAIT STATIONS	EACH
7.88 AC	BAITING OF RODENT BAIT STATIONS	EACH
7.88 AD	WATERBUG BAIT APPLICATION	BLOCK

[Added 05-24-2013]

13. Refer to Page 366, **Subsection 6.40.2.(C)(c)(1)(m) Software Requirements**, as modified by Article 1 on page A1-2;
Delete the text under **Subsection (m)**, in its entirety;
Substitute the following revised text:

"(m) Software Requirements: Microsoft Windows 7 Professional SP1, 32 bit; Microsoft Office Professional 2010; Microsoft Project 2010; Adobe Acrobat reader; Anti-Virus software package with 2 year updates subscription; and, either Auto Cad LT or Microsoft Visio Standard Edition, as directed by the Engineer."

[Added 09-04-2013]

14. Refer to Page 384, the end of **Section 6.44 - White and Yellow Thermoplastic Reflectorized Pavement Markings**;
Insert new **SECTION 6.44 PO,** after **Section 6.44**, as contained on the following pages A1-2k through A1-2m.

[Added 02-10-2014]

15. Refer to Pages 393 and 394, **SECTION 6.52 - Uniformed Full-Time Flagperson**;
Delete **Section** 6.52 on pages 393 and 394, but do not delete examples on pages 395 and 396;
Substitute SECTION 6.52 CG, as contained on the following pages A1-2n and A1-2o.

SECTION 6.44 PO
Lane Pavement Overlay

6.44PO.1. DESCRIPTION. This section describes the furnishing and application of an approved Green Asphalt Pavement Color Scheme along designated bicycle lanes and Brick-Red Asphalt Pavement Color Scheme matching Quest's StreetBondCL Terracotta color along designated Select Bus Service (SBS) lanes, as indicated in the Contract Drawings or as directed by the Engineer.

6.44PO.2. REFERENCES.

A. ASTM D-4541 Standard Test Method for Pull-Off Strength of Coatings Using Portable Adhesion Tester.
B. ASTM D-4060 Test Method for Abrasion Resistance of Organic Coatings by the Taber Abrasion.
C. ASTM D-522-93A Standard Test Method for Mandrel Bend Test of Attached Organic Coatings.
D. ASTM G-155 QUV Accelerated Weathering Environment. Standard Practice for Operating Fluorescent Light Apparatus for UV Exposure of Nonmetallic Materials.
E. ASTM D-2486 MEK rub test for chemical resistance.
F. ASTM D-570 Standard Test Method for water absorption of plastics.
G. ASTM E-303 British Pendulum test for friction.
H. EPA 24 ASTM D3960-05 Volatile Organic Compounds.

6.44PO.3. SUBMITTALS.

A. A copy of the current year accreditation certificate available from the Contractor or subcontractor who will be performing this work, or written verification from the coating supplier that the Contractor or subcontractor is qualified to perform this Work.
B. Written and published specification for the application of the selected asphalt pavement coating.
C. Confirmation of coating color.
D. Proof of coating performance through a Certificate of Analysis or equivalent document as provided by the Contractor or the coating supplier.

6.44PO.4. MATERIALS.

The following table outlines minimum performance properties of a typical asphalt pavement coating.

Characteristic	Test Specification	Measured result
Durability: Taber Abrasion resistance	ASTM D-4060 7 day cure, H-10 wheel (wet test)	< 5.0 g/1000
Water sensitivity	ASTM D-570 Water absorption after 9 days: Remaining absorption after 1 hour of recovery:	 < 10% < 1.0%
Color stability	ASTM G-155 QUV 2,000 hours (CIE units)	New York City Bike Lane Green $\Delta E < 1.5$
Color stability	ASTM G-155 QUV 2,000 hours (CIE units)	Brick color $\Delta E < 1.5$

Flexibility: Mandrel Bend	ASTM D-522-93A Flexibility as measured by Mandrel bend 0.5mm thick sample passes 10 mm at 21°C 0.5mm thick sample passes 125mm at -18°C	
Chemical resistance	ASTM D-2486 Modified MEK scrubs 16 dry mils, number of scrubs until 50% substrate exposed	>5000
Adhesion to Asphalt	ASTM D-4541	Substrate Failure
Friction Wet	ASTM E-303 British Pendulum Tester	>55
Environmental Sensitivity	EPA 24 ASTM D-3960-05 Volatile Organic Compounds	VOC < 150

These properties shall be evidenced by Certificates of Analysis produced by an independent qualified testing facility.

Green Bicycle and Red Bus Lane Pavement Overlays furnished by the following manufacturers, or approved equivalent, are acceptable for use in this contract:

Ennis Paint, Inc.
1509 S. Kaufman Street
Ennis, TX 75119

Integrated Pavement Concepts, Inc.
102-17957 55th Avenue
Surrey, BC Canada V3S 6C4

Crafco, Inc.
420 N. Roosevelt Avenue
Chandler, AZ 85226

6.44PO.5. **METHODS.** The asphalt pavement coating system shall be applied to the pavement in accordance with the manufacturer's specification. In its hardened state the color shall be as specified, and as approved by the Engineer. The material shall present a marking whose color and chemical resistance will not degrade under normal exposure to calcium chloride, sodium chloride or automotive oils and fuels. Color pigments used shall remain stable under exposure to ultra violet light. A minimum of four (4) layers of coating material shall be applied to the pavement surface.

The Contractor shall be required to use the proper equipment in the application of the asphalt pavement coating, as per the recommendation of the coating supplier, and as approved by the Engineer.

Asphalt pavement must be stable, well compacted and generally in excellent condition for the application of the asphalt pavement coating to be successful. The Engineer shall make the final determination as to the suitability of the existing asphalt pavement.

The asphalt pavement surface shall be dry and free from all foreign matter, including but not limited to dirt, dust, de-icing materials, and chemical residue.

The asphalt pavement coating shall only be applied in the correct environmental conditions as instructed by the coating supplier, and as approved by the Engineer.

Refer to the instructions provided by the coating supplier regarding when the painted lane may be opened to traffic. Wait time is typically a function of the dry rate of the coating, and climate conditions.

The Engineer may, at his discretion, require the Contractor to remove all extraneous marks on the pavement made by the agents or employees of the Contractor, or made by others due to improper control or protection of the work area by the Contractor, his agents or employees. Any installation which, in the opinion of the Engineer, is not acceptable, whether by reason of poor workmanship, poor appearance, poor performance, poor materials, improper width or improper alignment, shall be reworked by the Contractor at no cost to the City. The Contractor shall replace rejected installation as directed by the Engineer, within fifteen (15) days after receiving written notification of the rejection of such completed work.

6.44PO.6. MEASUREMENT. The quantities to be measured for payment shall be the number of square yards of Lane Pavement Overlay, of each color, placed as specified to the satisfaction of the Engineer.

6.44PO.7. PRICES TO COVER. The unit prices bid per square yard of Green Bicycle Lane Pavement Overlay and Red Bus Lane Pavement Overlay shall cover the cost of all labor, materials, plant, equipment, insurance, and necessary incidentals required including, but not limited to, testing, cleaning, preparation of surfaces, and application of the lane pavement overlay materials, all in accordance with the contract plans and specifications, and as directed by the Engineer.

Payment will be made under:

Item No.	Item	Pay Unit
6.44 POG	GREEN BICYCLE LANE PAVEMENT OVERLAY	S.Y.
6.44 POR	RED BUS LANE PAVEMENT OVERLAY	S.Y.

SECTION 6.52 CG
Crossing Guard

6.52CG.1. INTENT. This section describes the employment of full-time uniformed crossing guards to direct and detour traffic.

6.52CG.2. DESCRIPTION. The Contractor shall furnish an adequate number of competent crossing guards to control vehicular and pedestrian traffic when it is necessary to maintain alternating one-way traffic in one lane of a two-way roadway, and at all other locations where construction operations, construction vehicles and equipment, and temporary traffic patterns related to the construction operations require positive temporary traffic control for safe, efficient traffic operations.

6.52CG.3. METHODS. All crossing guards, whether paid for under this item or not, shall be proficient in speaking, writing and reading English and adequately trained, as approved by the Engineer, in controlling vehicular and pedestrian traffic at construction sites.

All crossing guards, whether paid for under this item or not, their apparel, hand-signaling devices, and active two-way radios shall be appropriate for use at roadway construction sites as approved by the Engineer.

Prior to the start of crossing guard operations, the Contractor shall provide to the Engineer a list of crossing guards to be used in the contract, identifying the source of crossing guard training for each individual. When requested by the Engineer, crossing guards shall demonstrate their competency in crossing guard procedures. Crossing guards not competent in controlling vehicular and pedestrian traffic procedures to the satisfaction of the Engineer shall be retrained or replaced at once. Each crossing guard paid under this item must be a full-time crossing guard. If any worker performing services under this item is also assigned the task of directing construction equipment (as per attached Example #2, worker acting as a flagperson 'A') or any laborer tasks, then such worker shall be deemed to be subject to the provisions of Labor Law §220 Prevailing Wage Schedule and will not be paid for under this Item.

6.52CG.4. MEASUREMENT. The quantity to be measured for payment shall be the number of person-hours of uniformed crossing guard service actually performed, as authorized by the Engineer. Laborers who are not full-time crossing guard will not be measured for payment as crossing guards under this or any other item. Each uniformed crossing guard shall be required to work a minimum of eight (8) hours a day and the Contractor will be given a minimum of twelve (12) hours advanced notice by the Engineer as to when to furnish a crossing guard.

6.52CG.5. PRICE TO COVER. The contract price per person-hour shall cover the cost of all labor, materials, equipment, and insurance necessary to employ a uniformed full-time crossing guard, and equip him/her with safety vests, hard hats, and signaling devices, including all other incidental costs necessary to control and detour traffic, as shown on the Contract Drawings, the Examples #1 and #2 on pages 395 and 396 (excluding worker acting as a flagperson "A" in Example #2), or as directed by the Engineer.

Payment for flagperson "A" in Example #2, shall be deemed to be included under other items of work, as appropriate.

Where there is no scheduled item for Crossing Guard, the cost of furnishing Crossing Guards as required shall be deemed included in the unit price bid for the Maintenance and Protection of Traffic item.

Payment will be made under:

Item No.	Item	Pay Unit
6.52 CG	CROSSING GUARD	PERSON-HOUR (P/HR)

[Added 02-24-2014]

16. Refer to Pages 480 and 481, **Subsection 7.13.2.(B) MAINTENANCE OF STREETS**, 4th paragraph, beginning with the words "The Contractor shall maintain the traveled way . . .;
Delete the 4th paragraph, in its entirety;
Substitute the following text:

"The Contractor shall maintain the traveled way in such a condition and conduct operations in such a manner that snow and ice may be readily removed by others as and when necessary, and in such a manner that proper drainage is provided for the melting of snow in the banks resulting from normal plowing. However, the Contractor will not be responsible for snow or ice removal on the pavement or traveled way opened for public usage, except within the limits of the work zone(s) which may include, but is not be limited to, stairways, promenades, esplanade areas, and sidewalk, including those fronting his office and the Engineer's field office all of which will be the responsibility of the Contractor."

[Added 04-15-2015]

17. Refer to Page A1-2n of this Addendum, **Subsection 6.52CG.5. PRICE TO COVER;**
Add the following text as the second paragraph under **Subsection 6.52CG.5.:**

"The Contractor is advised that until the Comptroller of the City of New York sets a prevailing wage rate for crossing guards, there are no prevailing wage rates for crossing guards."

18. Refer to Pages 328 through 341, **Subsections 6.23.5. MEASUREMENT** and **6.23.6. PRICES TO COVER;**
Delete **Subsection 6.23.5. MEASUREMENT** and **6.23.6. PRICES TO COVER**, in their entirety;
Substitute **Subsection 6.23.5. MEASUREMENT (Revised)** and **6.23.6. PRICES TO COVER (Revised)**, as contained on the following pages A1-2q through A1-2af

19. Refer to Page 511, **SECTIONS 7.97 THRU 8.01 (NO TEXT)**;
Change the words "**SECTIONS 7.97 THRU 8.01 (NO TEXT)**" to read "**SECTIONS 7.97 THRU 7.99 (NO TEXT)**";
Insert new Section 8.00 MT, as contained on the following pages A1-2ag Through A1-2ai;
Insert the words "**SECTION 8.01 (NO TEXT)**".

6.23.5. MEASUREMENT (Revised).

(A) The quantities of

ITEM NO. 6.23 AA	FURNISH AND INSTALL FIRE ALARM POST IN ACCORDANCE WITH F.D. STD. DWG. #141
ITEM NO. 6.23 AB	REMOVE EXISTING FIRE ALARM POST
ITEM NO. 6.23 AC	ADJUST FIRE ALARM POST TO NEW GRADE IN ACCORDANCE WITH F.D. STD. DWG. #167
ITEM NO. 6.23 BA	FURNISH AND INSTALL FIRE ALARM POST AND SUBBASE IN ACCORDANCE WITH F.D. STD. DWG. #141

to be measured for payment shall be the number of fire alarm posts with or without subbases, as specified, incorporated in the work as shown, specified or required, to the satisfaction of the Engineer; the number of fire alarm posts and/or empty housings actually delivered to the Fire Department's storehouse as shown, specified or required, to the satisfaction of the Engineer; or, the number of fire alarm posts adjusted to the new grade as shown, specified or required, to the satisfaction of the Engineer.

(B) The quantities of

ITEM NO. 6.23 AF	FURNISH AND INSTALL FIRE DEPARTMENT POLE TERMINAL (CHIPPY) BOX IN ACCORDANCE WITH FIRE DEPARTMENT STANDARD DRAWING #145AA
ITEM NO. 6.23 AFA	FURNISH AND INSTALL FIRE DEPARTMENT POLE TERMINAL (CHIPPY) BOX IN ACCORDANCE WITH FIRE DEPARTMENT STANDARD DRAWING #145AA WITHOUT TERMINATING CABLES
ITEM NO. 6.23 BF	FURNISH AND INSTALL FIRE DEPARTMENT POLE TERMINAL (HOFFMAN) BOX IN ACCORDANCE WITH FIRE DEPARTMENT STANDARD DRAWING #146
ITEM NO. 6.23 BFE	FURNISH AND INSTALL FIRE DEPARTMENT POLE TERMINAL (HOFFMAN) BOX IN ACCORDANCE WITH FIRE DEPARTMENT STANDARD DRAWING #146 WITHOUT TERMINATING CABLES

to be measured for payment shall be the number of pole terminal boxes of each type, incorporated in the work, complete, as shown, specified or required, to the satisfaction of the Engineer.

(C) The quantities of

ITEM NO. 6.23 BBS	FURNISH AND INSTALL 3" 90 DEGREE P.V.C. WIDE BEND, SCHEDULE 40, U.L. 651 (WITHOUT PAVEMENT EXCAVATION) IN ACCORDANCE WITH F.D. STD. DWG. #141
ITEM NO. 6.23 BBSE	FURNISH AND INSTALL 3" 90 DEGREE P.V.C. WIDE BEND, SCHEDULE 40, U.L. 651 (WITH PAVEMENT EXCAVATION) IN ACCORDANCE WITH F.D. STD. DWG. #141
ITEM NO. 6.23 BH	FURNISH AND INSTALL 4" 90 DEGREE P.V.C. WIDE BEND, SCHEDULE 40, U.L. 651 (WITHOUT PAVEMENT EXCAVATION) IN ACCORDANCE WITH F.D. STD. DWG. #141 OR #145AA
ITEM NO. 6.23 BHE	FURNISH AND INSTALL 4" 90 DEGREE P.V.C. WIDE BEND, SCHEDULE 40, U.L. 651 (WITH PAVEMENT EXCAVATION) IN ACCORDANCE WITH F.D. STD. DWG. #141 OR #145AA
ITEM NO. 6.23 CB	FURNISH AND INSTALL 2 – 3" 90 DEGREE P.V.C. WIDE BENDS, SCHEDULE 40, U.L. 651 IN ONE TRENCH (WITHOUT PAVEMENT EXCAVATION) IN ACCORDANCE WITH F.D. STD. DWG. #141
ITEM NO. 6.23 CBE	FURNISH AND INSTALL 2 – 3" 90 DEGREE P.V.C. WIDE BENDS, SCHEDULE 40, U.L. 651 IN ONE TRENCH (WITH PAVEMENT EXCAVATION) IN ACCORDANCE WITH F.D. STD. DWG. #141

ITEM NO. 6.23 XBB	FURNISH AND INSTALL 2" GALVANIZED STEEL 90 DEGREE BEND (WITHOUT PAVEMENT EXCAVATION) IN ACCORDANCE WITH F.D. STD. DWG. #145BB
ITEM NO. 6.23 XBBE	FURNISH AND INSTALL 2" GALVANIZED STEEL 90 DEGREE BEND (WITH PAVEMENT EXCAVATION) IN ACCORDANCE WITH F.D. STD. DWG. #145BB
ITEM NO. 6.23 XCC	FURNISH AND INSTALL 3" GALVANIZED STEEL 90-DEGREE BEND (WITHOUT PAVEMENT EXCAVATION)
ITEM NO. 6.23 XCCE	FURNISH AND INSTALL 3" GALVANIZED STEEL 90-DEGREE BEND (WITH PAVEMENT EXCAVATION)
ITEM NO. 6.23 XDD	FURNISH AND INSTALL 4" GALVANIZED STEEL 90-DEGREE BEND (WITHOUT PAVEMENT EXCAVATION)
ITEM NO. 6.23 XDDE	FURNISH AND INSTALL 4" GALVANIZED STEEL 90-DEGREE BEND (WITH PAVEMENT EXCAVATION)

to be measured for payment shall be the number of bends of each type and size of eighteen (18") inch radius for fire alarm posts or poles installed in the work, complete, as shown, specified or required, to the satisfaction of the Engineering.

(D) The quantities of

ITEM NO. 6.23 BCS	FURNISH AND INSTALL 3" P.V.C. CONDUIT, SCHEDULE 40, U.L. 651 (WITHOUT PAVEMENT EXCAVATION)
ITEM NO. 6.23 BCSE	FURNISH AND INSTALL 3" P.V.C. CONDUIT, SCHEDULE 40, U.L. 651 (WITH PAVEMENT EXCAVATION)
ITEM NO. 6.23 BGS	FURNISH AND INSTALL 4" P.V.C. CONDUIT, SCHEDULE 40, U.L. 651 (WITHOUT PAVEMENT EXCAVATION)
ITEM NO. 6.23 BGSE	FURNISH AND INSTALL 4" P.V.C. CONDUIT, SCHEDULE 40, U.L. 651 (WITH PAVEMENT EXCAVATION)
ITEM NO. 6.23 BGT	FURNISH AND INSTALL 2 – 4" P.V.C. CONDUITS, SCHEDULE 40, U.L. 651 IN ONE TRENCH (WITHOUT PAVEMENT EXCAVATION, ONE ON TOP OF THE OTHER)
ITEM NO. 6.23 BGTE	FURNISH AND INSTALL 2 – 4" P.V.C. CONDUITS, SCHEDULE 40, U.L. 651 IN ONE TRENCH (WITH PAVEMENT EXCAVATION, ONE ON TOP OF THE OTHER)
ITEM NO. 6.23 CC	FURNISH AND INSTALL 2 – 3" P.V.C. CONDUITS, SCHEDULE 40, U.L. 651 IN ONE TRENCH (WITHOUT PAVEMENT EXCAVATION, ONE ON TOP OF THE OTHER)
ITEM NO. 6.23 CCE	FURNISH AND INSTALL 2 – 3" P.V.C. CONDUITS, SCHEDULE 40, U.L. 651 IN ONE TRENCH (WITH PAVEMENT EXCAVATION, ONE ON TOP OF THE OTHER)
ITEM NO. 6.23 XB	FURNISH AND INSTALL 2" STEEL GALVANIZED CONDUIT (WITHOUT PAVEMENT EXCAVATION)
ITEM NO. 6.23 XBE	FURNISH AND INSTALL 2" STEEL GALVANIZED CONDUIT (WITH PAVEMENT EXCAVATION)
ITEM NO. 6.23 XC	FURNISH AND INSTALL 3" GALVANIZED STEEL CONDUIT (WITHOUT PAVEMENT EXCAVATION)
ITEM NO. 6.23 XCE	FURNISH AND INSTALL 3" GALVANIZED STEEL CONDUIT (WITH PAVEMENT EXCAVATION)
ITEM NO. 6.23 XD	FURNISH AND INSTALL 4" GALVANIZED STEEL CONDUIT (WITHOUT PAVEMENT EXCAVATION)
ITEM NO. 6.23 XDE	FURNISH AND INSTALL 4" GALVANIZED STEEL CONDUIT (WITH PAVEMENT EXCAVATION)

to be measured for payment shall be the number of linear feet of each size, number and kind of fire communication conduit and forty-eight (48") radius bends incorporated in the work, complete, as shown, specified or required, to the satisfaction of the Engineer, measured along the center line of each run of fire communication conduit, from center line of manhole to center line of manhole or to center line of fire alarm post or pole, as is applicable.

(E) The quantities of

ITEM NO. 6.23 BD	FURNISH AND INSTALL 4-PAIR FIRE ALARM CABLE
ITEM NO. 6.23 DC	FURNISH AND INSTALL 10 PAIR FIRE ALARM CABLE
ITEM NO. 6.23 DDA	FURNISH AND INSTALL 15 PAIR FIRE ALARM CABLE
ITEM NO. 6.23 DDB	FURNISH AND INSTALL 20 PAIR FIRE ALARM CABLE
ITEM NO. 6.23 DDC	FURNISH AND INSTALL 25 PAIR FIRE ALARM CABLE
ITEM NO. 6.23 DDD	FURNISH AND INSTALL 30 PAIR FIRE ALARM CABLE
ITEM NO. 6.23 DDE	FURNISH AND INSTALL 40 PAIR FIRE ALARM CABLE
ITEM NO. 6.23 DF	FURNISH AND INSTALL 45 PAIR FIRE ALARM CABLE
ITEM NO. 6.23 DG	FURNISH AND INSTALL 50 PAIR FIRE ALARM CABLE
ITEM NO. 6.23 DH	FURNISH AND INSTALL 55 PAIR FIRE ALARM CABLE
ITEM NO. 6.23 DJ	FURNISH AND INSTALL 60 PAIR FIRE ALARM CABLE

to be measured for payment shall be the number of linear feet of each size and type of fire alarm cable, including slack, incorporated in the work, complete, as shown, specified or required, to the satisfaction of the Engineer, measured along the centerline of each run of fire alarm cable, continuously through manholes.

(F) The quantities of

ITEM NO. 6.23 BE	FURNISH AND INSTALL FIRE DEPARTMENT MANHOLE TYPE "A" WITH FRAME AND COVER IN ACCORDANCE WITH F.D. STD. DWG. #140, #144, & #144E
ITEM NO. 6.23 BES	FURNISH AND INSTALL FIRE DEPARTMENT SLOTTED MANHOLE TYPE "A" WITH FRAME AND COVER IN ACCORDANCE WITH F.D. STD. DWG. #140, #144S & #144E
ITEM NO. 6.23 EB	FURNISH AND INSTALL FIRE DEPARTMENT MANHOLE TYPE "B" WITH FRAME & COVER IN ACCORDANCE WITH F.D. STD. DWG. #140, #144, #144C, #144CC, & #144E
ITEM NO. 6.23 HH	FURNISH AND INSTALL F.D.N.Y. SIDEWALK HANDHOLE WITH FRAME AND COVER IN ACCORDANCE WITH F.D. STD. DWG. #144B OR #144E
ITEM NO. 6.23 HHA	FURNISH AND INSTALL F.D.N.Y. SIDEWALK HANDHOLE WITH FRAME AND COVER IN ACCORDANCE WITH F.D. STD. DWG. #143
ITEM NO. 6.23 HHS	FURNISH AND INSTALL F.D.N.Y. SIDEWALK SLOTTED HANDHOLE WITH FRAME AND COVER IN ACCORDANCE WITH F.D. STD. DWG. #144E OR #144BS

to be measured for payment shall be the number of each type manhole or handhole installed in the work, complete, as shown, specified or required, to the satisfaction of the Engineer.

(G) The quantities of

ITEM NO. 6.23 BFA	FURNISH AND INSTALL FIRE DEPARTMENT 48 WIRE TERMINAL BOX AND TERMINATE FIRE ALARM CABLES
ITEM NO. 6.23 BFB	FURNISH AND INSTALL FIRE DEPARTMENT 24 WIRE TERMINAL BOX AND TERMINATE FIRE ALARM CABLES
ITEM NO. 6.23 BFC	FURNISH AND INSTALL FIRE DEPARTMENT 12 WIRE TERMINAL BOX AND TERMINATE FIRE ALARM CABLES

to be measured for payment shall be the number of terminal boxes of each type, incorporated in the work, complete, as shown, specified or required, to the satisfaction of the Engineer.

(H) The quantity of

ITEM NO. 6.23 BGB	FURNISH AND INSTALL 4" PVC CONDUIT TO 4" GALVANIZED STEEL BUSHING AS SHOWN IN F.D. STD. DWG. #145AA OR 146

ITEM NO. 6.23 BGD	FURNISH AND INSTALL 3" PVC CONDUIT TO 3" GALVANIZED STEEL BUSHING AS SHOWN IN F.D. STD. DWG. #145AA OR 146
ITEM NO. 6.23 BGR	FURNISH AND INSTALL 4" PVC CONDUIT TO 2" GALVANIZED STEEL REDUCER BUSHING AS SHOWN IN F.D. STD. DWG. #145AA
ITEM NO. 6.23 BGRA	FURNISH AND INSTALL 4" PVC CONDUIT TO 3" GALVANIZED STEEL REDUCER BUSHING AS SHOWN IN F.D. STD. DWG. #145AA OR 146
ITEM NO. 6.23 BGRC	FURNISH AND INSTALL 3" PVC CONDUIT TO 2" GALVANIZED STEEL REDUCER BUSHING AS SHOWN IN F.D. STD. DWG. #145AA OR 146
ITEM NO. 6.23 BGRE	FURNISH AND INSTALL 3" PVC CONDUIT TO 4" GALVANIZED STEEL REDUCER BUSHING AS SHOWN IN F.D. STD. DWG. #145AA OR 146

to be measured for payment shall be the number of bushings incorporated in the work, complete, as shown, specified or required, to the satisfication of the Engineer.

(I) The quantity of

ITEM NO. 6.23 BP	FURNISH AND INSTALL FIRE ALARM PEDESTAL BUMPERS (2 REQUIRED PER SET) IN ACCORDANCE WITH F.D. STD. DWG. #168

to be measured for payment shall be the number of sets of bumpers, incorporated in the work, complete, as shown, specified or required, to the satisfaction of the Engineer. Each set shall consist of two (2) bumpers.

(J) The quantities of

ITEM NO. 6.23 FC	REMOVE EXISTING F.D.N.Y. MANHOLE FRAME & COVER AND FURNISH AND INSTALL F.D.N.Y. FRAME & COVER IN ACCORDANCE WITH F.D. STD. DWG. #140
ITEM NO. 6.23 HFC	REMOVE EXISTING F.D.N.Y. SIDEWALK HANDHOLE FRAME & COVER AND FURNISH AND INSTALL F.D.N.Y. SIDEWALK HANDHOLE FRAME & COVER IN ACCORDANCE WITH F.D. STD. DWG. #143 OR #144B

to be measured for payment shall be the number of each type of existing F.D.N.Y. manhole frame & cover or sidewalk handhole frame & cover that have been replaced, at the locations shown or as directed and as shown on the Fire Department Standards, to the satisfaction of the Engineer.

(K) The quantities of

ITEM NO. 6.23 FCA	FURNISH AND INSTALL F.D.N.Y. MANHOLE FRAME & COVER IN ACCORDANCE WITH F.D. STD. DWG. #140
ITEM NO. 6.23 FCB	FURNISH AND INSTALL F.D.N.Y. MANHOLE COVER IN ACCORDANCE WITH F.D. STD. DWG. #140
ITEM NO. 6.23 HC	FURNISH AND INSTALL F.D.N.Y. SIDEWALK HANDHOLE COVER IN ACCORDANCE WITH F.D. STD. DWG. #143 OR #144B
ITEM NO. 6.23 HFCA	FURNISH AND INSTALL F.D.N.Y. SIDEWALK HANDHOLE FRAME AND COVER IN ACCORDANCE WITH F.D. STD. DWG. #143 OR #144B

to be measured for payment shall be the number of new manhole or sidewalk handhole frames with covers or manhole or sidewalk handhole covers incorporated in the work, complete, as shown, specified or required, to the satisfaction of the Engineer.

(L) The quantities of

ITEM NO. 6.23 RH	REMOVE EXISTING F.D.N.Y. SIDEWALK HANDHOLE
ITEM NO. 6.23 RM	REMOVE EXISTING F.D.N.Y. MANHOLE

to be measured for payment shall be the number of F.D.N.Y. manholes or sidewalk handholes actually removed, as specified, at the location shown or as directed, to the satisfaction of the Engineer.

(M) The quantities of

ITEM NO. 6.23 RIC	RODDING AND INSTALLING FIRE ALARM CABLE IN EXISTING TELEPHONE CONDUIT SYSTEM
ITEM NO. 6.23 RICA	ROD AND ROPE CONDUIT AND INSTALL 4 PAIR FIRE ALARM CABLE IN EXISTING VERIZON OR FIRE DEPARTMENT CONDUIT SYSTEM
ITEM NO. 6.23 RICB	ROD AND ROPE CONDUIT AND INSTALL 10 PAIR FIRE ALARM CABLE IN EXISTING VERIZON OR FIRE DEPARTMENT CONDUIT SYSTEM
ITEM NO. 6.23 RICC	ROD AND ROPE CONDUIT AND INSTALL 15 PAIR FIRE ALARM CABLE IN EXISTING VERIZON OR FIRE DEPARTMENT CONDUIT SYSTEM
ITEM NO. 6.23 RICD	ROD AND ROPE CONDUIT AND INSTALL 20 PAIR FIRE ALARM CABLE IN EXISTING VERIZON OR FIRE DEPARTMENT CONDUIT SYSTEM
ITEM NO. 6.23 RICE	ROD AND ROPE CONDUIT AND INSTALL 25 PAIR FIRE ALARM CABLE IN EXISTING VERIZON OR FIRE DEPARTMENT CONDUIT SYSTEM
ITEM NO. 6.23 RICF	ROD AND ROPE CONDUIT AND INSTALL 30 PAIR FIRE ALARM CABLE IN EXISTING VERIZON OR FIRE DEPARTMENT CONDUIT SYSTEM
ITEM NO. 6.23 RICG	ROD AND ROPE CONDUIT AND INSTALL 40 PAIR FIRE ALARM CABLE IN EXISTING VERIZON OR FIRE DEPARTMENT CONDUIT SYSTEM
ITEM NO. 6.23 RICH	ROD AND ROPE CONDUIT AND INSTALL 45 PAIR FIRE ALARM CABLE IN EXISTING VERIZON OR FIRE DEPARTMENT CONDUIT SYSTEM
ITEM NO. 6.23 RICI	ROD AND ROPE CONDUIT AND INSTALL 50 PAIR FIRE ALARM CABLE IN EXISTING VERIZON OR FIRE DEPARTMENT CONDUIT SYSTEM
ITEM NO. 6.23 RICJ	ROD AND ROPE CONDUIT AND INSTALL 55 PAIR FIRE ALARM CABLE IN EXISTING VERIZON OR FIRE DEPARTMENT CONDUIT SYSTEM
ITEM NO. 6.23 RICK	ROD AND ROPE CONDUIT AND INSTALL 60 PAIR FIRE ALARM CABLE IN EXISTING VERIZON OR FIRE DEPARTMENT CONDUIT SYSTEM
ITEM NO. 6.23 RR	ROD AND ROPE EXISTING CONDUIT
ITEM NO. 6.23 XY	FURNISH AND INSTALL POLYPROPYLENE DRAG ROPE

to be measured for payment shall be the number of linear feet of drag rope, with or without rodding, or cable with rodding, including slack, incorporated in the work, complete, as shown, specified or required, to the satisfaction of the Engineer, measured along the center line of each run of drag rope.

(N) The quantities of

ITEM NO. 6.23 XAPE	FURNISH AND INSTALL 1/2" GALVANIZED STEEL CONDUIT POLE RISER IN ACCORDANCE WITH FIRE DEPARTMENT STANDARD DRAWING #145AA
ITEM NO. 6.23 XBPE	FURNISH AND INSTALL 2" GALVANIZED STEEL CONDUIT POLE RISER IN ACCORDANCE WITH FIRE DEPARTMENT STANDARD DRAWING #145AA
ITEM NO. 6.23 XCPE	FURNISH AND INSTALL 3" GALVANIZED STEEL CONDUIT POLE RISER IN ACCORDANCE WITH FIRE DEPARTMENT STANDARD DRAWING #145AA OR #146
ITEM NO. 6.23 XDPE	FURNISH AND INSTALL 4" GALVANIZED STEEL CONDUIT POLE RISER IN ACCORDANCE WITH FIRE DEPARTMENT STANDARD DRAWING #145AA OR #146

to be measured for payment shall be the number of each type of conduit pole riser installed in the work, complete, as shown, specified or required, to the satisfaction of the Engineer.

(O) The quantity of

ITEM NO. 6.23 MW	FURNISH AND INSTALL 5/16 INCH 7 STRAND GALVANIZED STEEL MESSENGER WIRE AND APPURTENANCES

to be measured for payment shall be the number of linear feet of each size and type of steel messenger wire, including slack, incorporated in the work, complete, as shown, specified or required, to the satisfaction of the Engineer, measured along the centerline of each run.

(P) The quantity of

ITEM NO. 6.23 PP PAINT EXISTING FIRE ALARM POST AND/OR HOUSING

to be measured for payment shall be the number of fire alarm posts and/or boxes painted, complete, as specified or required, to the satisfaction of the Engineer.

6.23.6. PRICES TO COVER (Revised). Before payment is made for work done under this Section, the Contractor shall obtain a Certificate of Compliance from the Fire Department and file such certificate with the Engineer. The said certificate shall certify that all work at each location complies with the standards of, and is acceptable to, the Fire Department, Bureau of Communications.

The following contract items shall also include the cost of the permits and the letter of acceptance required and necessary to construct the new Fire Communications System at the locations shown or required all in accordance with the Contract Drawings, Specifications and Standards, and as directed by the Engineer.

(A) The contract prices bid for

ITEM NO. 6.23 AA	FURNISH AND INSTALL FIRE ALARM POST IN ACCORDANCE WITH F.D. STD. DWG. #141
ITEM NO. 6.23 BA	FURNISH AND INSTALL FIRE ALARM POST AND SUBBASE IN ACCORDANCE WITH F.D. STD. DWG. #141
ITEM NO. 6.23 AB	REMOVE EXISTING FIRE ALARM POST
ITEM NO. 6.23 AC	ADJUST FIRE ALARM POST TO NEW GRADE IN ACCORDANCE WITH F.D. STD. DWG. #167

shall be a unit price for each and shall cover the cost of all labor, materials, plant, equipment, insurance, samples, and tests required and necessary to furnish and install fire alarm post with or without subbase, as specified, and at the location shown or as directed and as shown on the Fire Department Standards; or to remove the fire alarm post and/or empty housing at the locations shown and deliver them to the Fire Department's Storehouse as directed; and shall include, but not be limited to, adjustment of base, subbase, and terminal box appurtenances, as may be required, at the locations shown or as directed. Said work shall include, but not be limited to, furnishing and installing base, subbase when specified, and appurtenances; connections; and furnishing and installing all other items necessary to complete this work and do all work incidental thereto, all in accordance with the Contract Drawings, Specifications and Standards, and as directed by the Engineer.

(B) The contract prices bid for

ITEM NO. 6.23 AF	FURNISH AND INSTALL FIRE DEPARTMENT POLE TERMINAL (CHIPPY) BOX IN ACCORDANCE WITH FIRE DEPARTMENT STANDARD DRAWING #145AA
ITEM NO. 6.23 AFA	FURNISH AND INSTALL FIRE DEPARTMENT POLE TERMINAL (CHIPPY) BOX IN ACCORDANCE WITH FIRE DEPARTMENT STANDARD DRAWING #145AA WITHOUT TERMINATING CABLES
ITEM NO. 6.23 BF	FURNISH AND INSTALL FIRE DEPARTMENT POLE TERMINAL (HOFFMAN) BOX IN ACCORDANCE WITH FIRE DEPARTMENT STANDARD DRAWING #146
ITEM NO. 6.23 BFE	FURNISH AND INSTALL FIRE DEPARTMENT POLE TERMINAL (HOFFMAN) BOX IN ACCORDANCE WITH FIRE DEPARTMENT STANDARD DRAWING #146 WITHOUT TERMINATING CABLES

shall be a unit price for each type pole terminal box and shall cover the cost of all labor, materials, plant, equipment, insurance, samples, and tests required and necessary to furnish and install the pole terminal box of the type and at the locations shown or as directed and as shown on the Fire Department Standards. Said work shall also include, but not limited to, connections, cable terminations, and furnishing and installing all other items necessary to complete this work and doing all work incidental thereto, all in accordance with the Contract Drawings, Specifications and Standards, and as directed by the Engineer.

(C) The contract prices bid for

ITEM NO. 6.23 BBS	FURNISH AND INSTALL 3" 90 DEGREE P.V.C. WIDE BEND, SCHEDULE 40, U.L. 651 (WITHOUT PAVEMENT EXCAVATION) IN ACCORDANCE WITH F.D. STD. DWG. #141
ITEM NO. 6.23 BBSE	FURNISH AND INSTALL 3" 90 DEGREE P.V.C. WIDE BEND, SCHEDULE 40, U.L. 651 (WITH PAVEMENT EXCAVATION) IN ACCORDANCE WITH F.D. STD. DWG. #141
ITEM NO. 6.23 BH	FURNISH AND INSTALL 4" 90 DEGREE P.V.C. WIDE BEND, SCHEDULE 40, U.L. 651 (WITHOUT PAVEMENT EXCAVATION) IN ACCORDANCE WITH F.D. STD. DWG. #141 OR #145AA
ITEM NO. 6.23 BHE	FURNISH AND INSTALL 4" 90 DEGREE P.V.C. WIDE BEND, SCHEDULE 40, U.L. 651 (WITH PAVEMENT EXCAVATION) IN ACCORDANCE WITH F.D. STD. DWG. #141 OR #145AA
ITEM NO. 6.23 CB	FURNISH AND INSTALL 2 – 3" 90 DEGREE P.V.C. WIDE BENDS, SCHEDULE 40, U.L. 651 IN ONE TRENCH (WITHOUT PAVEMENT EXCAVATION) IN ACCORDANCE WITH F.D. STD. DWG. #141
ITEM NO. 6.23 CBE	FURNISH AND INSTALL 2 – 3" 90 DEGREE P.V.C. WIDE BENDS, SCHEDULE 40, U.L. 651 IN ONE TRENCH (WITH PAVEMENT EXCAVATION) IN ACCORDANCE WITH F.D. STD. DWG. #141
ITEM NO. 6.23 XBB	FURNISH AND INSTALL 2" GALVANIZED STEEL 90 DEGREE BEND (WITHOUT PAVEMENT EXCAVATION) IN ACCORDANCE WITH F.D. STD. DWG. #145BB
ITEM NO. 6.23 XBBE	FURNISH AND INSTALL 2" GALVANIZED STEEL 90 DEGREE BEND (WITH PAVEMENT EXCAVATION) IN ACCORDANCE WITH F.D. STD. DWG. #145BB
ITEM NO. 6.23 XCC	FURNISH AND INSTALL 3" GALVANIZED STEEL 90-DEGREE BEND (WITHOUT PAVEMENT EXCAVATION)
ITEM NO. 6.23 XCCE	FURNISH AND INSTALL 3" GALVANIZED STEEL 90-DEGREE BEND (WITH PAVEMENT EXCAVATION)
ITEM NO. 6.23 XDD	FURNISH AND INSTALL 4" GALVANIZED STEEL 90-DEGREE BEND (WITHOUT PAVEMENT EXCAVATION)
ITEM NO. 6.23 XDDE	FURNISH AND INSTALL 4" GALVANIZED STEEL 90-DEGREE BEND (WITH PAVEMENT EXCAVATION)

shall be a unit price for each type of conduit bend, single or double, with or without pavement excavation, as specified, and shall cover the cost of all labor, materials, plant, equipment, insurance, samples, and tests required and necessary to furnish and install a two (2") or three (3") or four (4") inch bend, single or double in one trench, of eighteen (18") inch radius for fire alarm posts or poles at the locations shown or as directed and as shown on the Fire Department Standards. Said work shall also include, but not be limited to, excavation and backfilling, connections, and furnishing and installing all other items necessary to complete this work and doing all work incidental thereto, all in accordance with the Contract Drawings, Specifications and Standards, and as directed by the Engineer.

(D) The contract prices bid for

ITEM NO. 6.23 BCS	FURNISH AND INSTALL 3" P.V.C. CONDUIT, SCHEDULE 40, U.L. 651 (WITHOUT PAVEMENT EXCAVATION)
ITEM NO. 6.23 BCSE	FURNISH AND INSTALL 3" P.V.C. CONDUIT, SCHEDULE 40, U.L. 651 (WITH PAVEMENT EXCAVATION)
ITEM NO. 6.23 BGS	FURNISH AND INSTALL 4" P.V.C. CONDUIT, SCHEDULE 40, U.L. 651 (WITHOUT PAVEMENT EXCAVATION)
ITEM NO. 6.23 BGSE	FURNISH AND INSTALL 4" P.V.C. CONDUIT, SCHEDULE 40, U.L. 651 (WITH PAVEMENT EXCAVATION)
ITEM NO. 6.23 BGT	FURNISH AND INSTALL 2 – 4" P.V.C. CONDUITS, SCHEDULE 40, U.L. 651 IN ONE TRENCH (WITHOUT PAVEMENT EXCAVATION, ONE ON TOP OF THE OTHER)
ITEM NO. 6.23 BGTE	FURNISH AND INSTALL 2 – 4" P.V.C. CONDUITS, SCHEDULE 40, U.L. 651 IN ONE TRENCH (WITH PAVEMENT EXCAVATION, ONE ON TOP OF THE OTHER)

ITEM NO. 6.23 CC	FURNISH AND INSTALL 2 – 3" P.V.C. CONDUITS, SCHEDULE 40, U.L. 651 IN ONE TRENCH (WITHOUT PAVEMENT EXCAVATION, ONE ON TOP OF THE OTHER)
ITEM NO. 6.23 CCE	FURNISH AND INSTALL 2 – 3" P.V.C. CONDUITS, SCHEDULE 40, U.L. 651 IN ONE TRENCH (WITH PAVEMENT EXCAVATION, ONE ON TOP OF THE OTHER)
ITEM NO. 6.23 XB	FURNISH AND INSTALL 2" STEEL GALVANIZED CONDUIT (WITHOUT PAVEMENT EXCAVATION)
ITEM NO. 6.23 XBE	FURNISH AND INSTALL 2" STEEL GALVANIZED CONDUIT (WITH PAVEMENT EXCAVATION)
ITEM NO. 6.23 XC	FURNISH AND INSTALL 3" GALVANIZED STEEL CONDUIT (WITHOUT PAVEMENT EXCAVATION)
ITEM NO. 6.23 XCE	FURNISH AND INSTALL 3" GALVANIZED STEEL CONDUIT (WITH PAVEMENT EXCAVATION)
ITEM NO. 6.23 XD	FURNISH AND INSTALL 4" GALVANIZED STEEL CONDUIT (WITHOUT PAVEMENT EXCAVATION)
ITEM NO. 6.23 XDE	FURNISH AND INSTALL 4" GALVANIZED STEEL CONDUIT (WITH PAVEMENT EXCAVATION)

shall be a unit price per linear foot for each size and kind of fire communication conduit and forty-eight (48") inch radius bends, single or double, with or without pavement excavation, as specified, and shall cover the cost of all labor, materials, plant, equipment, insurance, samples, and tests required and necessary to furnish and install the fire communication conduit (single or double in one trench) of the sizes and kind (P.V.C. or Galvanized Steel) specified, to the lines and grades and at the locations shown or as directed, with or without pavement excavation, as specified, of all materials of whatever nature encountered (except excavation of boulders in open cut and ledge rock). Said work shall also include, but not limited to, concrete cradles and encasements as required; all sheeting and bracing; pumping; bridging, decking; removal or abandonment, as required, of parts of the existing Fire Communications System; breaking down and filling in of abandoned fire appurtenances; furnishing and installing select granular fill material for backfill; backfilling; compaction; cleaning up; temporary restoration of street surfaces; installation and removal of temporary fire alarm communication facilities, if required; connections; and furnishing and installing all other items necessary to complete this work and do all work incidental thereto, all in accordance with the Contract Drawings, Specifications and Standards, and as directed by the Engineer.

(E) The contract prices bid for

ITEM NO. 6.23 BD	FURNISH AND INSTALL 4-PAIR FIRE ALARM CABLE
ITEM NO. 6.23 DC	FURNISH AND INSTALL 10 PAIR FIRE ALARM CABLE
ITEM NO. 6.23 DDA	FURNISH AND INSTALL 15 PAIR FIRE ALARM CABLE
ITEM NO. 6.23 DDB	FURNISH AND INSTALL 20 PAIR FIRE ALARM CABLE
ITEM NO. 6.23 DDC	FURNISH AND INSTALL 25 PAIR FIRE ALARM CABLE
ITEM NO. 6.23 DDD	FURNISH AND INSTALL 30 PAIR FIRE ALARM CABLE
ITEM NO. 6.23 DDE	FURNISH AND INSTALL 40 PAIR FIRE ALARM CABLE
ITEM NO. 6.23 DF	FURNISH AND INSTALL 45 PAIR FIRE ALARM CABLE
ITEM NO. 6.23 DG	FURNISH AND INSTALL 50 PAIR FIRE ALARM CABLE
ITEM NO. 6.23 DH	FURNISH AND INSTALL 55 PAIR FIRE ALARM CABLE
ITEM NO. 6.23 DJ	FURNISH AND INSTALL 60 PAIR FIRE ALARM CABLE

shall be a unit price per linear foot for each size and type of fire alarm cable, and shall cover the cost of all labor, materials, plant, equipment, insurance, samples, and tests required and necessary to furnish and install the fire alarm cable of the sizes and at the locations shown or as directed. Said work shall also include, but not be limited to, the cost of splices as required; cutting existing conduit, if required; protection and maintenance of the system for the duration of the guarantee period as required; and furnishing and installing all other items necessary to complete this work and do all work incidental thereto, all in accordance with the Contract Drawings, Specifications and Standards, and as directed by the Engineer.

(F) The contract prices bid for

ITEM NO. 6.23 BE	FURNISH AND INSTALL FIRE DEPARTMENT MANHOLE TYPE "A" WITH FRAME AND COVER IN ACCORDANCE WITH F.D. STD. DWG. #140, #144, & #144E
ITEM NO. 6.23 BES	FURNISH AND INSTALL FIRE DEPARTMENT SLOTTED MANHOLE TYPE "A" WITH FRAME AND COVER IN ACCORDANCE WITH F.D. STD. DWG. #140, #144S & #144E
ITEM NO. 6.23 EB	FURNISH AND INSTALL FIRE DEPARTMENT MANHOLE TYPE "B" WITH FRAME & COVER IN ACCORDANCE WITH F.D. STD. DWG. #140, #144, #144C, #144CC, & #144E
ITEM NO. 6.23 HH	FURNISH AND INSTALL F.D.N.Y. SIDEWALK HANDHOLE WITH FRAME AND COVER IN ACCORDANCE WITH F.D. STD. DWG. #144B OR #144E
ITEM NO. 6.23 HHA	FURNISH AND INSTALL F.D.N.Y. SIDEWALK HANDHOLE WITH FRAME AND COVER IN ACCORDANCE WITH F.D. STD. DWG. #143
ITEM NO. 6.23 HHS	FURNISH AND INSTALL F.D.N.Y. SIDEWALK SLOTTED HANDHOLE WITH FRAME AND COVER IN ACCORDANCE WITH F.D. STD. DWG. #144E OR #144BS

shall be a unit price for each type manhole or sidewalk handhole and shall cover the cost of all labor, materials, plant, equipment, insurance, samples, and tests required and necessary to furnish and install the Fire Department manhole with frame and cover or sidewalk handhole with frame and cover, as specified, at the locations shown or as directed and as shown on the Fire Department Standards. Said work shall also include, but not limited to, excavation of all materials of whatever nature encountered (except excavation of boulders in open cut and ledge rock); reinforcement; all sheeting and bracing; pumping; bridging, decking; removal or abandonment, as required of parts of the existing Fire Communications System; breaking down and filling in of abandoned fire appurtenances; backfill; compaction; cleaning up; temporary restoration of street surfaces; installation and removal of temporary fire alarm communication facilities, if required; connections; and furnishing and installing all other items necessary to complete this work and do all work incidental thereto, all in accordance with the Contract Drawings, Specifications and Standards, and as directed by the Engineer.

(G) The contract prices bid for

ITEM NO. 6.23 BFA	FURNISH AND INSTALL FIRE DEPARTMENT 48 WIRE TERMINAL BOX AND TERMINATE FIRE ALARM CABLES
ITEM NO. 6.23 BFB	FURNISH AND INSTALL FIRE DEPARTMENT 24 WIRE TERMINAL BOX AND TERMINATE FIRE ALARM CABLES
ITEM NO. 6.23 BFC	FURNISH AND INSTALL FIRE DEPARTMENT 12 WIRE TERMINAL BOX AND TERMINATE FIRE ALARM CABLES

shall be a unit price bid for each type cable terminal box and shall cover the cost of all labor, materials, plant, equipment, insurance, samples, and tests required and necessary to furnish and install the cable terminal box of the type and at the locations shown or as directed and as shown on the Fire Department Standards. Said work shall also include, but not be limited to, connections, cable terminations, and furnishing and installing all other items necessary to complete this work and do all work incidental thereto, all in accordance with the Contract Drawings, Specifications and Standards, and as directed by the Engineer.

(H) The contract price bid for

ITEM NO. 6.23 BGB	FURNISH AND INSTALL 4" PVC CONDUIT TO 4" GALVANIZED STEEL BUSHING AS SHOWN IN F.D. STD. DWG. #145AA OR 146
ITEM NO. 6.23 BGD	FURNISH AND INSTALL 3" PVC CONDUIT TO 3" GALVANIZED STEEL BUSHING AS SHOWN IN F.D. STD. DWG. #145AA OR 146
ITEM NO. 6.23 BGR	FURNISH AND INSTALL 4" PVC CONDUIT TO 2" GALVANIZED STEEL REDUCER BUSHING AS SHOWN IN F.D. STD. DWG. #145AA
ITEM NO. 6.23 BGRA	FURNISH AND INSTALL 4" PVC CONDUIT TO 3" GALVANIZED STEEL REDUCER BUSHING AS SHOWN IN F.D. STD. DWG. #145AA OR 146

ITEM NO. 6.23 BGRC	FURNISH AND INSTALL 3" PVC CONDUIT TO 2" GALVANIZED STEEL REDUCER BUSHING AS SHOWN IN F.D. STD. DWG. #145AA OR 146
ITEM NO. 6.23 BGRE	FURNISH AND INSTALL 3" PVC CONDUIT TO 4" GALVANIZED STEEL REDUCER BUSHING AS SHOWN IN F.D. STD. DWG. #145AA OR 146

shall be a unit price bid for each reducer and shall cover the cost of all labor, materials, plant, equipment, insurance, samples, and tests required and necessary to furnish and install a bushing of the type specified and at the location shown or as directed and as shown on the Fire Department Standards. Said work shall also include, but not be limited to, furnishing and installing all other items necessary to complete this work and do all work incidental thereto, all in accordance with the Contract Drawings, Specifications and Standards, and as directed by the Engineer.

(I) The contract price bid for

ITEM NO. 6.23 BP	FURNISH AND INSTALL FIRE ALARM PEDESTAL BUMPERS (2 REQUIRED PER SET) IN ACCORDANCE WITH F.D. STD. DWG. #168

shall be a unit price for each set of bumpers (2 required per set) and shall cover the cost of all labor, materials, plant, equipment, insurance, samples, and tests required and necessary to furnish and install bumpers at the locations shown or as directed and as shown on the Fire Department Standards. Said work shall also include, but not be limited to, excavation and backfill; furnishing and installing steel bar reinforcement and concrete; compaction; cleaning up; temporary restoration of sidewalk surfaces; painting; and furnishing and installing all other items necessary to complete this work; and do all work incidental thereto, all in accordance with the Contract Drawings, Specifications and Standards, and as directed by the Engineer.

(J) The contract prices bid for

ITEM NO. 6.23 FC	REMOVE EXISTING F.D.N.Y. MANHOLE FRAME & COVER AND FURNISH AND INSTALL F.D.N.Y. FRAME & COVER IN ACCORDANCE WITH F.D. STD. DWG. #140
ITEM NO. 6.23 HFC	REMOVE EXISTING F.D.N.Y. SIDEWALK HANDHOLE FRAME & COVER AND FURNISH AND INSTALL F.D.N.Y. SIDEWALK HANDHOLE FRAME & COVER IN ACCORDANCE WITH F.D. STD. DWG. #143 OR #144B

shall be a unit price for each and shall cover the cost of all labor, materials, plant, equipment, insurance, samples, and tests required and necessary to remove existing F.D.N.Y. manhole frame and cover or sidewalk handhole frame & cover and furnish and install manhole frame and cover or sidewalk handhole frame & cover, at the locations shown or as directed and as shown on the Fire Department Standards. Said work shall also include, but not be limited to, furnishing and installing all other items necessary to complete this work and do all work incidental thereto, all in accordance with the Contract Drawings, Specifications and Standards, and as directed by the Engineer.

(K) The contract prices bid for

ITEM NO. 6.23 FCA	FURNISH AND INSTALL F.D.N.Y. MANHOLE FRAME & COVER IN ACCORDANCE WITH F.D. STD. DWG. #140
ITEM NO. 6.23 FCB	FURNISH AND INSTALL F.D.N.Y. MANHOLE COVER IN ACCORDANCE WITH F.D. STD. DWG. #140
ITEM NO. 6.23 HC	FURNISH AND INSTALL F.D.N.Y. SIDEWALK HANDHOLE COVER IN ACCORDANCE WITH F.D. STD. DWG. #143 OR #144B
ITEM NO. 6.23 HFCA	FURNISH AND INSTALL F.D.N.Y. SIDEWALK HANDHOLE FRAME AND COVER IN ACCORDANCE WITH F.D. STD. DWG. #143 OR #144B

shall be a unit price bid for each type and shall cover the cost of all labor, materials, plant, equipment, insurance, samples, and tests required and necessary to furnish and install the Fire Department manhole frame and/or cover or furnish and install sidewalk handhole fame and/or cover, at the location shown or as directed and as shown on the Fire Department Standards. Said work shall also include, but not be limited to, the excavation of all materials of whatever nature encountered (except excavation of boulders in open

cut and ledge rock); reinforcement; removal or abandonment, as required of parts of the existing Fire Communications System; breaking down and filling in of abandoned fire appurtenances; backfill; compaction; cleaning up; temporary restoration of street surfaces; installation and removal of temporary fire alarm communication facilities, if required; connections; and furnishing and installing all other items necessary to complete this work and do all work incidental thereto, all in accordance with the Contract Drawings, Specifications and Standards, and as directed by the Engineer.

(L) The contract prices bid for

ITEM NO. 6.23 RH	REMOVE EXISTING F.D.N.Y. SIDEWALK HANDHOLE
ITEM NO. 6.23 RM	REMOVE EXISTING F.D.N.Y. MANHOLE

shall be a unit price for each manhole or sidewalk handhole and shall cover the cost of all labor, materials, plant, equipment, insurance, samples, and tests required and necessary to remove an existing Fire Department manhole or sidewalk handhole, as specified, at the location shown or as directed. Said work shall also include, but not limited to, the removal or abandonment of an existing F.D.N.Y. manhole or sidewalk handhole; breaking down and filling in of abandoned fire appurtenances; furnishing and installing backfill; compaction; cleaning up; temporary restoration of street surfaces, if required; and furnishing and installing all other items necessary to complete this work and do all work incidental thereto, all in accordance with the Contract Drawings, Specifications and Standards, and as directed by the Engineer.

(M) The contract prices bid for

ITEM NO. 6.23 RIC	RODDING AND INSTALLING FIRE ALARM CABLE IN EXISTING TELEPHONE CONDUIT SYSTEM
ITEM NO. 6.23 RICA	ROD AND ROPE CONDUIT AND INSTALL 4 PAIR FIRE ALARM CABLE IN EXISTING VERIZON OR FIRE DEPARTMENT CONDUIT SYSTEM
ITEM NO. 6.23 RICB	ROD AND ROPE CONDUIT AND INSTALL 10 PAIR FIRE ALARM CABLE IN EXISTING VERIZON OR FIRE DEPARTMENT CONDUIT SYSTEM
ITEM NO. 6.23 RICC	ROD AND ROPE CONDUIT AND INSTALL 15 PAIR FIRE ALARM CABLE IN EXISTING VERIZON OR FIRE DEPARTMENT CONDUIT SYSTEM
ITEM NO. 6.23 RICD	ROD AND ROPE CONDUIT AND INSTALL 20 PAIR FIRE ALARM CABLE IN EXISTING VERIZON OR FIRE DEPARTMENT CONDUIT SYSTEM
ITEM NO. 6.23 RICE	ROD AND ROPE CONDUIT AND INSTALL 25 PAIR FIRE ALARM CABLE IN EXISTING VERIZON OR FIRE DEPARTMENT CONDUIT SYSTEM
ITEM NO. 6.23 RICF	ROD AND ROPE CONDUIT AND INSTALL 30 PAIR FIRE ALARM CABLE IN EXISTING VERIZON OR FIRE DEPARTMENT CONDUIT SYSTEM
ITEM NO. 6.23 RICG	ROD AND ROPE CONDUIT AND INSTALL 40 PAIR FIRE ALARM CABLE IN EXISTING VERIZON OR FIRE DEPARTMENT CONDUIT SYSTEM
ITEM NO. 6.23 RICH	ROD AND ROPE CONDUIT AND INSTALL 45 PAIR FIRE ALARM CABLE IN EXISTING VERIZON OR FIRE DEPARTMENT CONDUIT SYSTEM
ITEM NO. 6.23 RICI	ROD AND ROPE CONDUIT AND INSTALL 50 PAIR FIRE ALARM CABLE IN EXISTING VERIZON OR FIRE DEPARTMENT CONDUIT SYSTEM
ITEM NO. 6.23 RICJ	ROD AND ROPE CONDUIT AND INSTALL 55 PAIR FIRE ALARM CABLE IN EXISTING VERIZON OR FIRE DEPARTMENT CONDUIT SYSTEM
ITEM NO. 6.23 RICK	ROD AND ROPE CONDUIT AND INSTALL 60 PAIR FIRE ALARM CABLE IN EXISTING VERIZON OR FIRE DEPARTMENT CONDUIT SYSTEM
ITEM NO. 6.23 RR	ROD AND ROPE EXISTING CONDUIT
ITEM NO. 6.23 XY	FURNISH AND INSTALL POLYPROPYLENE DRAG ROPE

shall be a unit price per linear foot for drag rope with or without rodding, or cable with rodding and shall cover the cost of all labor, materials, plant, equipment, insurance, samples, and tests required and necessary to furnish and install drag rope of the type specified at the locations shown or as directed and as shown on the Fire Department Standards, including furnishing and installing all other items necessary to complete this work and do all work incidental thereto, all in accordance with the Contract Drawings, Specifications and Standards, and as directed by the Engineer.

(N) The contract prices bid for

ITEM NO. 6.23 XAPE	FURNISH AND INSTALL 1/2" GALVANIZED STEEL CONDUIT POLE RISER IN ACCORDANCE WITH FIRE DEPARTMENT STANDARD DRAWING #145AA
ITEM NO. 6.23 XBPE	FURNISH AND INSTALL 2" GALVANIZED STEEL CONDUIT POLE RISER IN ACCORDANCE WITH FIRE DEPARTMENT STANDARD DRAWING #145AA
ITEM NO. 6.23 XCPE	FURNISH AND INSTALL 3" GALVANIZED STEEL CONDUIT POLE RISER IN ACCORDANCE WITH FIRE DEPARTMENT STANDARD DRAWING #145AA OR #146
ITEM NO. 6.23 XDPE	FURNISH AND INSTALL 4" GALVANIZED STEEL CONDUIT POLE RISER IN ACCORDANCE WITH FIRE DEPARTMENT STANDARD DRAWING #145AA OR #146

shall be a unit price for each type of conduit pole riser and shall cover the cost of all labor, materials, plant, equipment, insurance, samples, and tests required and necessary to furnish and install each type of pole riser at the location shown or as directed and as shown on the Fire Department Standards. Said work shall also include, but not be limited to, connections, and furnishing and installing all other items necessary to complete this work and doing all work incidental thereto, all in accordance with the Contract Drawings, Specifications and Standards, and as directed by the Engineer.

(O) The contract price bid for

ITEM NO. 6.23 MW	FURNISH AND INSTALL 5/16 INCH 7 STRAND GALVANIZED STEEL MESSENGER WIRE AND APPURTENANCES

shall be a unit price per linear foot for each size and type of steel messenger wire, and shall cover the cost of all labor, materials, plant, equipment, insurance, samples, and tests required and necessary to furnish and install the fire alarm messager wire of the size and type specified at the locations shown or as directed and as shown on the Fire Department Standards including, but not limited to, furnishing and installing approved galvanized clamps and other appurtenances as may be required, to complete this work and do all work incidental thereto, all in accordance with the Contract Drawings, Specifications and Standards, and as directed by the Engineer.

(P) The contract price bid for

ITEM NO. 6.23 PP	PAINT EXISTING FIRE ALARM POST AND/OR HOUSING

shall be a unit price for each fire alarm post and/or box and shall cover the cost of all labor, materials, plant, equipment, insurance, samples, and tests required and necessary to paint existing fire alarm posts and/or boxes as directed and doing all work incidental thereto, all in accordance with the Contract Drawings, Specifications and Standards, and as directed by the Engineer.

Payment will be made under:

Item No.	Item	Pay Unit
6.23 AA	FURNISH AND INSTALL FIRE ALARM POST IN ACCORDANCE WITH F.D. STD. DWG. #141	EACH
6.23 AB	REMOVE EXISTING FIRE ALARM POST	EACH
6.23 AC	ADJUST FIRE ALARM POST TO NEW GRADE IN ACCORDANCE WITH F.D. STD. DWG. #167	EACH
6.23 AF	FURNISH AND INSTALL FIRE DEPARTMENT POLE TERMINAL (CHIPPY)BOX IN ACCORDANCE WITH FIRE DEPARTMENT STANDARD DRAWING #145AA	EACH

6.23 AFA	FURNISH AND INSTALL FIRE DEPARTMENT POLE TERMINAL (CHIPPY) BOX IN ACCORDANCE WITH FIRE DEPARTMENT STANDARD DRAWING #145AA WITHOUT TERMINATING CABLES	EACH
6.23 BA	FURNISH AND INSTALL FIRE ALARM POST AND SUBBASE IN ACCORDANCE WITH F.D. STD. DWG. #141	EACH
6.23 BBS	FURNISH AND INSTALL 3" 90 DEGREE P.V.C. WIDE BEND, SCHEDULE 40, U.L. 651 (WITHOUT PAVEMENT EXCAVATION) IN ACCORDANCE WITH F.D. STD. DWG. #141	EACH
6.23 BBSE	FURNISH AND INSTALL 3" 90 DEGREE P.V.C. WIDE BEND, SCHEDULE 40, U.L. 651 (WITH PAVEMENT EXCAVATION) IN ACCORDANCE WITH F.D. STD. DWG. #141	EACH
6.23 BCS	FURNISH ANC INSTALL 3" P.V.C. CONDUIT, SCHEDULE 40, U.L. 651 (WITHOUT PAVEMENT EXCAVATION)	L.F.
6.23 BCSE	FURNISH AND INSTALL 3" P.V.C. CONDUIT, SCHEDULE 40, U.L. 651 (WITH PAVEMENT EXCAVATION)	L.F.
6.23 BD	FURNISH AND INSTALL 4-PAIR FIRE ALARM CABLE	L.F.
6.23 BE	FURNISH AND INSTALL FIRE DEPARTMENT MANHOLE TYPE "A" WITH FRAME AND COVER IN ACCORDANCE WITH F.D. STD. DWG. #140, #144, & #144E	EACH
6.23 BES	FURNISH AND INSTALL FIRE DEPARTMENT SLOTTED MANHOLE TYPE "A" WITH FRAME AND COVER IN ACCORDANCE WITH F.D. STD. DWG. #140, #144S & #144E	EACH
6.23 BF	FURNISH AND INSTALL FIRE DEPARTMENT POLE TERMINAL (HOFFMAN) BOX IN ACCORDANCE WITH FIRE DEPARTMENT STANDARD DRAWING #146	EACH
6.23 BFA	FURNISH AND INSTALL FIRE DEPARTMENT 48 WIRE TERMINAL BOX AND TERMINATE FIRE ALARM CABLES	EACH
6.23 BFB	FURNISH AND INSTALL FIRE DEPARTMENT 24 WIRE TERMINAL BOX AND TERMINATE FIRE ALARM CABLES	EACH
6.23 BFC	FURNISH AND INSTALL FIRE DEPARTMENT 12 WIRE TERMINAL BOX AND TERMINATE FIRE ALARM CABLES	EACH
6.23 BFE	FURNISH AND INSTALL FIRE DEPARTMENT POLE TERMINAL (HOFFMAN) BOX IN ACCORDANCE WITH FIRE DEPARTMENT STANDARD DRAWING #146 WITHOUT TERMINATING CABLES	EACH
6.23 BGB	FURNISH AND INSTALL 4" PVC CONDUIT TO 4" GALVANIZED STEEL BUSHING AS SHOWN IN F.D. STD. DWG. #145AA OR 146	EACH
6.23 BGD	FURNISH AND INSTALL 3" PVC CONDUIT TO 3" GALVANIZED STEEL BUSHING AS SHOWN IN F.D. STD. DWG. #145AA OR 146	EACH
6.23 BGR	FURNISH AND INSTALL 4" PVC CONDUIT TO 2" GALVANIZED STEEL REDUCER BUSHING AS SHOWN IN F.D. STD. DWG. #145AA	EACH
6.23 BGRA	FURNISH AND INSTALL 4" PVC CONDUIT TO 3" GALVANIZED STEEL REDUCER BUSHING AS SHOWN IN F.D. STD. DWG. #145AA OR 146	EACH
6.23 BGRC	FURNISH AND INSTALL 3" PVC CONDUIT TO 2" GALVANIZED STEEL REDUCER BUSHING AS SHOWN IN F.D. STD. DWG. #145AA OR 146	EACH
6.23 BGRE	FURNISH AND INSTALL 3" PVC CONDUIT TO 4" GALVANIZED STEEL REDUCER BUSHING AS SHOWN IN F.D. STD. DWG. #145AA OR 146	EACH
6.23 BGS	FURNISH AND INSTALL 4" P.V.C. CONDUIT, SCHEDULE 40, U.L. 651 (WITHOUT PAVEMENT EXCAVATION)	L.F.
6.23 BGSE	FURNISH AND INSTALL 4" P.V.C. CONDUIT, SCHEDULE 40, U.L. 651 (WITH PAVEMENT EXCAVATION)	L.F.
6.23 BGT	FURNISH AND INSTALL 2 – 4" P.V.C. CONDUITS, SCHEDULE 40, U.L. 651 IN ONE TRENCH (WITHOUT PAVEMENT EXCAVATION, ONE ON TOP OF THE OTHER)	L.F.

6.23 BGTE	FURNISH AND INSTALL 2 – 4" P.V.C. CONDUITS, SCHEDULE 40, U.L. 651 IN ONE TRENCH (WITH PAVEMENT EXCAVATION, ONE ON TOP OF THE OTHER)	L.F.
6.23 BH	FURNISH AND INSTALL 4" 90 DEGREE P.V.C. WIDE BEND, SCHEDULE 40, U.L. 651 (WITHOUT PAVEMENT EXCAVATION) IN ACCORDANCE WITH F.D. STD. DWG. #141 OR #145AA	EACH
6.23 BHE	FURNISH AND INSTALL 4" 90 DEGREE P.V.C. WIDE BEND, SCHEDULE 40, U.L. 651 (WITH PAVEMENT EXCAVATION) IN ACCORDANCE WITH F.D. STD. DWG. #141 OR #145AA	EACH
6.23 BP	FURNISH AND INSTALL FIRE ALARM PEDESTAL BUMPERS (2 REQUIRED PER SET) IN ACCORDANCE WITH F.D. STD. DWG. #168	SETS
6.23 CB	FURNISH AND INSTALL 2 – 3" 90 DEGREE P.V.C. WIDE BENDS, SCHEDULE 40, U.L. 651 IN ONE TRENCH (WITHOUT PAVEMENT EXCAVATION) IN ACCORDANCE WITH F.D. STD. DWG. #141	EACH
6.23 CBE	FURNISH AND INSTALL 2 – 3" 90 DEGREE P.V.C. WIDE BENDS, SCHEDULE 40, U.L. 651 IN ONE TRENCH (WITH PAVEMENT EXCAVATION) IN ACCORDANCE WITH F.D. STD. DWG. #141	EACH
6.23 CC	FURNISH AND INSTALL 2 – 3" P.V.C. CONDUITS, SCHEDULE 40, U.L. 651 IN ONE TRENCH (WITHOUT PAVEMENT EXCAVATION, ONE ON TOP OF THE OTHER)	L.F.
6.23 CCE	FURNISH AND INSTALL 2 – 3" P.V.C. CONDUITS, SCHEDULE 40, U.L. 651 IN ONE TRENCH (WITH PAVEMENT EXCAVATION, ONE ON TOP OF THE OTHER)	L.F.
6.23 DC	FURNISH AND INSTALL 10 PAIR FIRE ALARM CABLE	L.F.
6.23 DDA	FURNISH AND INSTALL 15 PAIR FIRE ALARM CABLE	L.F.
6.23 DDB	FURNISH AND INSTALL 20 PAIR FIRE ALARM CABLE	L.F.
6.23 DDC	FURNISH AND INSTALL 25 PAIR FIRE ALARM CABLE	L.F.
6.23 DDD	FURNISH AND INSTALL 30 PAIR FIRE ALARM CABLE	L.F.
6.23 DDE	FURNISH AND INSTALL 40 PAIR FIRE ALARM CABLE	L.F.
6.23 DF	FURNISH AND INSTALL 45 PAIR FIRE ALARM CABLE	L.F.
6.23 DG	FURNISH AND INSTALL 50 PAIR FIRE ALARM CABLE	L.F.
6.23 DH	FURNISH AND INSTALL 55 PAIR FIRE ALARM CABLE	L.F.
6.23 DJ	FURNISH AND INSTALL 60 PAIR FIRE ALARM CABLE	L.F.
6.23 EB	FURNISH AND INSTALL FIRE DEPARTMENT MANHOLE TYPE "B" WITH FRAME & COVER IN ACCORDANCE WITH F.D. STD. DWG. #140, #144, #144C, #144CC, & #144E	EACH
6.23 FC	REMOVE EXISTING F.D.N.Y. MANHOLE FRAME & COVER AND FURNISH AND INSTALL F.D.N.Y. FRAME & COVER IN ACCORDANCE WITH F.D. STD. DWG. #140	EACH
6.23 FCA	FURNISH AND INSTALL F.D.N.Y. MANHOLE FRAME & COVER IN ACCORDANCE WITH F.D. STD. DWG. #140	EACH
6.23 FCB	FURNISH AND INSTALL F.D.N.Y. MANHOLE COVER IN ACCORDANCE WITH F.D. STD. DWG. #140	EACH
6.23 HC	FURNISH AND INSTALL F.D.N.Y. SIDEWALK HANDHOLE COVER IN ACCORDANCE WITH F.D. STD. DWG. #143 AND #144B	EACH
6.23 HFC	REMOVE EXISTING F.D.N.Y. SIDEWALK HANDHOLE FRAME & COVER AND FURNISH AND INSTALL F.D.N.Y. SIDEWALK HANDHOLE FRAME & COVER IN ACCORDANCE WITH F.D. STD. DWG. #143 & #144B	EACH
6.23 HFCA	FURNISH AND INSTALL F.D.N.Y. SIDEWALK HANDHOLE FRAME AND COVER IN ACCORDANCE WITH F.D. STD. DWG. #143 AND #144B	EACH
6.23 HH	FURNISH AND INSTALL F.D.N.Y. SIDEWALK HANDHOLE WITH FRAME AND COVER IN ACCORDANCE WITH F.D. STD. DWG. #143, #144B, & #144E	EACH
6.23 HHA	FURNISH AND INSTALL F.D.N.Y. SIDEWALK HANDHOLE WITH FRAME AND COVER IN ACCORDANCE WITH F.D. STD. DWG. #143	EACH

6.23 HHS	FURNISH AND INSTALL F.D.N.Y. SIDEWALK SLOTTED HANDHOLE WITH FRAME AND COVER IN ACCORDANCE WITH F.D. STD. DWG. #144E & #144BS	EACH
6.23 MW	FURNISH AND INSTALL 5/16 INCH 7 STRAND GALVANIZED STEEL MESSENGER WIRE AND APPURTENANCES	L.F.
6.23 PP	PAINT EXISTING FIRE ALARM POST AND/OR HOUSING	EACH
6.23 RH	REMOVE EXISTING F.D.N.Y. SIDEWALK HANDHOLE	EACH
6.23 RIC	RODDING AND INSTALLING FIRE ALARM CABLE IN EXISTING TELEPHONE CONDUIT SYSTEM	L.F.
6.23 RICA	ROD AND ROPE CONDUIT AND INSTALL 4 PAIR FIRE ALARM CABLE IN EXISTING VERIZON OR FIRE DEPARTMENT CONDUIT SYSTEM	L.F.
6.23 RICB	ROD AND ROPE CONDUIT AND INSTALL 10 PAIR FIRE ALARM CABLE IN EXISTING VERIZON OR FIRE DEPARTMENT CONDUIT SYSTEM	L.F.
6.23 RICC	ROD AND ROPE CONDUIT AND INSTALL 15 PAIR FIRE ALARM CABLE IN EXISTING VERIZON OR FIRE DEPARTMENT CONDUIT SYSTEM	L.F.
6.23 RICD	ROD AND ROPE CONDUIT AND INSTALL 20 PAIR FIRE ALARM CABLE IN EXISTING VERIZON OR FIRE DEPARTMENT CONDUIT SYSTEM	L.F.
6.23 RICE	ROD AND ROPE CONDUIT AND INSTALL 25 PAIR FIRE ALARM CABLE IN EXISTING VERIZON OR FIRE DEPARTMENT CONDUIT SYSTEM	L.F.
6.23 RICF	ROD AND ROPE CONDUIT AND INSTALL 30 PAIR FIRE ALARM CABLE IN EXISTING VERIZON OR FIRE DEPARTMENT CONDUIT SYSTEM	L.F.
6.23 RICG	ROD AND ROPE CONDUIT AND INSTALL 40 PAIR FIRE ALARM CABLE IN EXISTING VERIZON OR FIRE DEPARTMENT CONDUIT SYSTEM	L.F.
6.23 RICH	ROD AND ROPE CONDUIT AND INSTALL 45 PAIR FIRE ALARM CABLE IN EXISTING VERIZON OR FIRE DEPARTMENT CONDUIT SYSTEM	L.F.
6.23 RICI	ROD AND ROPE CONDUIT AND INSTALL 50 PAIR FIRE ALARM CABLE IN EXISTING VERIZON OR FIRE DEPARTMENT CONDUIT SYSTEM	L.F.
6.23 RICJ	ROD AND ROPE CONDUIT AND INSTALL 55 PAIR FIRE ALARM CABLE IN EXISTING VERIZON OR FIRE DEPARTMENT CONDUIT SYSTEM	L.F.
6.23 RICK	ROD AND ROPE CONDUIT AND INSTALL 60 PAIR FIRE ALARM CABLE IN EXISTING VERIZON OR FIRE DEPARTMENT CONDUIT SYSTEM	L.F.
6.23 RM	REMOVE EXISTING F.D.N.Y. MANHOLE	EACH
6.23 RR	ROD AND ROPE EXISTING CONDUIT	L.F.
6.23 XAPE	FURNISH AND INSTALL 1/2" GALVANIZED STEEL CONDUIT POLE RISER IN ACCORDANCE WITH FIRE DEPARTMENT STANDARD DRAWING #145AA	EACH
6.23 XB	FURNISH AND INSTALL 2" GALVANIZED STEEL CONDUIT (WITHOUT PAVEMENT EXCAVATION)	L.F.
6.23 XBB	FURNISH AND INSTALL 2" GALVANIZED STEEL 90 DEGREE BEND (WITHOUT PAVEMENT EXCAVATION) IN ACCORDANCE WITH F.D. STD. DWG. #145BB	EACH
6.23 XBBE	FURNISH AND INSTALL 2" GALVANIZED STEEL 90 DEGREE BEND (WITH PAVEMENT EXCAVATION) IN ACCORDANCE WITH F.D. STD. DWG. #145BB	EACH
6.23 XBE	FURNISH AND INSTALL 2" GALVANIZED STEEL CONDUIT (WITH PAVEMENT EXCAVATION)	L.F.

6.23 XBPE	FURNISH AND INSTALL 2" GALVANIZED STEEL CONDUIT POLE RISER IN ACCORDANCE WITH FIRE DEPARTMENT STANDARD DRAWING #145AA	EACH
6.23 XCPE	FURNISH AND INSTALL 3" GALVANIZED STEEL CONDUIT POLE RISER IN ACCORDANCE WITH FIRE DEPARTMENT STANDARD DRAWING #145AA OR #146	EACH
6.23 XDPE	FURNISH AND INSTALL 4" GALVANIZED STEEL CONDUIT POLE RISER IN ACCORDANCE WITH FIRE DEPARTMENT STANDARD DRAWING #145AA OR #146	EACH
6.23 XCC	FURNISH AND INSTALL 3" GALVANIZED STEEL 90-DEGREE BEND (WITHOUT PAVEMENT EXCAVATION)	EACH
6.23 XCCE	FURNISH AND INSTALL 3" GALVANIZED STEEL 90-DEGREE BEND (WITH PAVEMENT EXCAVATION)	EACH
6.23 XD	FURNISH AND INSTALL 4" GALVANIZED STEEL CONDUIT (WITHOUT PAVEMENT EXCAVATION)	L.F.
6.23 XDD	FURNISH AND INSTALL 4" GALVANIZED STEEL 90-DEGREE BEND (WITHOUT PAVEMENT EXCAVATION)	EACH
6.23 XDDE	FURNISH AND INSTALL 4" GALVANIZED STEEL 90-DEGREE BEND (WITH PAVEMENT EXCAVATION)	EACH
6.23 XDE	FURNISH AND INSTALL 4" GALVANIZED STEEL CONDUIT (WITH PAVEMENT EXCAVATION)	L.F.
6.23 XC	FURNISH AND INSTALL 3" GALVANIZED STEEL CONDUIT (WITHOUT PAVEMENT EXCAVATION)	L.F.
6.23 XCE	FURNISH AND INSTALL 3" GALVANIZED STEEL CONDUIT (WITH PAVEMENT EXCAVATION)	L.F.
6.23 XY	FURNISH AND INSTALL POLYPROPYLENE DRAG ROPE	L.F.

SECTION 8.00 MT – Microtrenching

8.00MT.1. INTENT. This section describes Microtrenching.

8.00MT.2. DESCRIPTION. Microtrenching involves the placement of shallow depth microduct systems in street and sidewalk applications. This process includes the saw cutting of sidewalks and/or streets, installation of microduct systems and fiber optic wiring, restoration of sidewalks and/or streets and disposal of all unused debris. Locations of saw-cut can be from manhole (if necessary) in street to curb entrance; either at curb seam or below curb; and then in sidewalk expansion joint between flag and curb. All microduct systems must be placed at a minimum depth of 4" below sidewalk grade and 6" in depth below street grade locations. If manhole entrance is necessary the excavation to enter manhole system shall be the minimum required to gain entrance to said manhole.

8.00MT.3. GENERAL REQUIRMENTS.

(A) DISPOSAL OF MATERIALS

1. All materials that are not reused pursuant to Subsection 6.02.3 of the NYC Department of Transportation, Standard Highway Specifications shall be disposed of in compliance with the applicable requirements of **Sections 1.06.47 and 1.06.48** in General Conditions.

(B) EXPOSED STRUCTURES TO BE PROTECTED

1. All exposed sewers, manholes, receiving basins, water mains and other hardware and structures shall be carefully protected.

8.00MT.4. MICROTRENCHING CONSTRUCTION METHODS.

All trenching/excavations shall be carried to the required depths in such a manner as to produce a pathway that produces an undisturbed subgrade and allows for standard restoration.

1. Cutting expansion joints in Sidewalks: Expansion joints shall be cut using a wet-cut methodology to reduce damage to adjacent sidewalk flags. All cuts shall be approximately 1" wide to approximately 9"-12" in depth to allow for the microduct system to be placed at a minimum of 4" below sidewalk grade. The depth of the cut will depend upon the depth of the existing flags, pathway required and existing sidewalk furniture and fixtures (including but not limited to tree pits, roots, parking meters, mailboxes, bike racks, etc.).

2. Sidewalk flags and placement of utility handholes and/or grade-level boxes: All handholes/grade-level boxes shall be centered in a sidewalk flag. This flag will be removed in whole, sub-grade access placed and sidewalk flag restored. At no time will handhole or grade-level box be in the corner of a sidewalk flag to ensure concrete integrity of the flag. In the event of the removal of a sidewalk flag, the flag should be removed in its entirety and replaced in accordance with all applicable sidewalk restoration rules and regulations.

    a. All handholes and/or grade-level boxes must meet weight bearing requirements for the application and comply with ANSI / SCTE 77 2007:

Application	Loading Requirements			
	Design Load (lbs)	Test Load w/ F.S. 1.5 (lbs)	Design Load (psf)	Test Load w/ F.S. 1.5 (psf)
Tier 5 – Sidewalk applications with a safety factor for occasional non-deliberate vehicular traffic	5,000	7,500	600	900
Tier 8 – Sidewalk applications with a safety factor for non-deliberate vehicular traffic	8,000	12,000	600	900
Tier 15 – Driveway, parking lot, and off roadway applications subject to occasional non-deliberate heavy vehicular traffic	15,000	22,500	800	1,200
Tier 22 – Driveway, parking lot and off roadway applications subject to occasional non-deliberate heavy vehicular traffic	22,500	33,750	800	1,200
AASHTO H-20 - Deliberate vehicular traffic applications	Certified pre-cast concrete, cast iron, or AASHTO recognized materials			

b. Minimum handhole size is 17"x30"x24"
c. Grade-level Box minimum size is 3'x5'x3'
d. All handholes/grade-level boxes must be composite to negate slippage due to environmental factors

3. Manhole entrance: Manholes are generally located within the street/vehicular pathway. Access to any manhole shall be kept to a minimum to gain entrance for microduct pathway, unless other obstructions exist which would make it necessary to continue the pathway in the roadway. Entrances to manhole shall be via pit directly adjacent to manhole and in direct line with pathway direction to minimize vehicular and pedestrian impact. All manhole related activities shall be performed in accordance with applicable rules and regulations.

4. Duct pathway placement: All microducts shall be placed vertically into the saw-cut trench, and the microduct should always be covered with requisite backfill material

8.00MT.5. RESTORATION.

1. Sidewalk expansion joint restoration:

a. Sidewalk expansion joints are to be restored using only NYC DOT approved materials. All expansion joints shall be recessed 1/2" below finished sidewalk surface and sealed with sealer, on an approved bond breaker, as soon as practical.

b. All expansion joints shall be sealed with a sealant meeting ASTM C 920, Type M, Grade P, Class 25, Use T_1,, and color to match to that of the adjacent sidewalk. The sealant shall be a rapid-setting, polyurethane-based joint sealant and shall be a self-leveling compound that provides for elongation. The sealant should be applied to avoid spillage onto sidewalk surface area.

   i. Joints are to be recessed 1/2" with the finished surface.
   ii. Joints should not be sealed during inclement weather.
   iii. Application of sealant shall be as per the manufacturer's written instructions.

2. Sidewalk flag restoration:

   a. Any flags that need to be restored must be done according the NYC DOT specifications as outlined in the Standard Highway Specifications Volumes I and II, latest version and as currently amended.

   b. Any flags that are below the standards set forth in NYC DOT specifications as outlined in the Standard Highway Specifications, Volumes I and II, and are directly adjacent to the original flag being replaced shall be replaced in accordance with Section 2(a) above.

3. Street/Asphalt restoration:

   a. All street/asphalt restoration must be done according to the NYC DOT specifications Section 2.22, Type 1 – Hot poured sealer as outlined in the Standard Highway Specifications Volumes I and II, latest version and as currently amended. Joints are to be finished flush with the pavement.

4. Street/Concrete restoration:

   a. All street/concrete pavement restoration shall be done in accordance with the requirements for sidewalk expansion joint restoration, above.

END OF SECTION

3. NEW SECTIONS

SECTION 4.09 SBS
Steel Faced Concrete Curb for SBS Stations

4.09SBS.1. INTENT. This section describes construction of Steel Faced Concrete Curb at Select Bus Service (SBS) station platforms.

4.09SBS.2. DESCRIPTION. Steel Faced Concrete Curb at SBS station platforms shall consist of the steel curb facing set in a concrete cradle extending to a minimum depth of sixteen (16") inches below the bottom of bent plates, to provide the depth of curb shown on the Contract Drawings for the various steel faced concrete curbs required at SBS Stations. The cradle shall be flush with the face of the steel. The steel shall be backed with concrete from the face of the steel facing for the width shown on the Contract Drawings.

4.09SBS.3. MATERIALS. Steel curb facing shall comply with the requirements of Section 2.13 of the Standard Highway Specifications and shall be as specified in the Contract Drawings. Concrete shall comply with the requirements of Section 3.05 of the Standard Highway Specifications, Class B-32, Type IIA. Cement shall be Type II Portland. Coarse aggregate shall comply with the requirements of Section 2.02, Type 1, Grade B, or Type 2, Size No. 57. An approved air-entraining agent shall be added at the time concrete ingredients are mixed with water.

4.09SBS.4. METHODS. All work shall be done in accordance with the requirements of Subsection 4.09.4 of the Standard Highway Specifications and the Contract Drawings.

4.09SBS.5. MEASUREMENT. The quantity to be measured for payment shall be the number of linear feet of each type of steel faced concrete curb constructed, complete, in place, as required, measured along the top of the exposed face of steel, and adjusted in accordance with **Section 5.04** of the Standard Highway Specifications.

Steel Faced Concrete Curb at SBS Stations will be measured for payment under the appropriate straight or corner steel faced concrete curb item, as shown on contract drawings.

4.09SBS.6. PRICES TO COVER. The contract price per linear foot of steel faced concrete curb at SBS stations for each type of steel faced curb shall cover the cost of all labor, materials, equipment, insurance, and incidentals required to construct the curb complete in place, including, but not limited to, excavation (other than rock excavation) and backfilling, in full compliance with the requirements of the specifications, to furnish such samples for testing and to provide such testing equipment, laboratory space and facilities as may be required, and maintaining the curb in good condition as specified in **Section 5.05** of the Standard Highway Specifications.

Payment will be made under:

Item No.	Item	Pay Unit
4.09 SBSAJ	STRAIGHT STEEL FACED CONCRETE CURB (30.5") FOR SBS STATIONS	L.F.
4.09 SBSCJ	CORNER STEEL FACED CONCRETE CURB (30.5") FOR SBS STATIONS	L.F.

SECTION 4.13 DSBS
Embedded Precast Concrete Detectable Warning Pavers for SBS Stations

4.13DSBS.1. DESCRIPTION. This work shall consist of furnishing and installing embedded precast concrete detectable warning pavers along the edge of SBS station platforms as indicated on the plans or elsewhere in the contract documents. The SBS platforms within two (2') feet of the curb shall be finished with a detectable warning pavers as specified herein.

4.13DSBS.2. MANUFACTURERS.
Precast Concrete Detectable Warning Pavers furnished by the following manufacturers, or approved equivalent, are acceptable for use in this contract:

A. Wausau Tile, Inc., PO Box 1520, Wausau, WI 54402-1520, (800) 388-8728
B. Hanover Architectural Products, 5000 Hanover Rd, Hanover, PA 17331, (800) 426-4242
C. Unilock, 301 East Sullivan Road, Aurora, IL 60505, (800) 864-5625
D. Approved Equivalent

4.13DSBS.3. MATERIALS.

A. GENERAL REQUIREMENTS: The Contractor shall supply the Manufacturer's certification that the detectable warning surface material meets the requirements of these specifications, at least 30 calendar days prior to proposed installation. The detectable warning surface material shall:

- Be precast concrete pavers, conforming to the requirements of ASTM C936 and ASTM C67.
- Be 12"x12"x2" deep, nominal dimensions for straight runs of detectable warnings. At locations, as shown on the plans, where detectable warnings are to be placed at radial turns, the contractor shall follow the recommendation of the manufacturer.
- Be ADA compliant precast concrete pavers matching "ADA-2 A-90" pavers as manufactured by Wausau Tile, Inc., or approved equal. The color shall be "Black" matching the "ADA-2 A-90" or Federal Standard Color #37056, unless otherwise specified.
- Shall comply with the Americans with Disabilities Act Accessibility Guidelines (ADAAG) Specifications.
- Be uniform in color and texture.
- Have a good appearance, free of cracks or other defects.
- Have clean-cut and well-defined edges.
- Where applicable, the units shall adhere to Hot Mix Asphalt (HMA) or Portland cement concrete (PCC) surfaces at a minimum air temperature of 60°F (16°C), and a minimum substrate temperature of 70°F (21°C).
- Be weather resistant and durable to normal pedestrian wear and maintenance activities.
- Show no appreciable fading, lifting, or shrinkage.
- Have friction characteristics similar to a broomed Portland cement concrete sidewalk surface as determined by the Engineer.

Setting bed material and/or surface preparation materials for installation of detectable warning pavers shall be in accordance with the manufacturer's recommendations.

B. PHYSICAL PROPERTIES:

PROPERTY	REQUIREMENTS
Compressive Strength, Min., 28 days	8 ksi (55 Mpa) Minimum
Freeze-thaw Loss (25 Cycles, one per day, 10% NaCl solution)	1.0% Maximum
Absorption Rate	5.0% Maximum

C. PACKAGING AND SHIPMENT: Embedded detectable warning units shall be shipped in accordance with commercially accepted standards. The following information shall be marked on each package or on the shipping invoice: the name of the product, the name and address of the manufacturer, and the quantity of material.

D. BASIS OF MATERIALS ACCEPTANCE: Acceptance of materials shall be based upon it meeting the criteria listed here in these specifications and being listed in the most current New York State Department of Transportation's Approved List of Embedded Detectable Warning Units.

4.13DSBS.4. CONSTRUCTION DETAILS. Precast concrete, embedded detectable warning pavers shall be installed in accordance with the manufacturer's specifications and recommendations.

The Contractor shall be required to follow all applicable manufacturer's requirements for environmental conditions, surface preparations, installation procedures, curing procedures, and materials compatibility.

Precast concrete detectable warning pavers (excluding their raised truncated domes) shall be set flush with a top surface elevation tolerance of 1/16" between adjacent units but not more than ±1/32" at perimeters between pavers and adjacent curb or sidewalk surfaces.

4.13DSBS.5. MEASUREMENT. The quantity of Embedded Precast Concrete Detectable Warning Pavers to be measured for payment shall be the number of square feet, measured to the nearest tenth (0.1) of a square foot, installed to the satisfaction of the Engineer.

4.13DSBS.6. PRICE TO COVER. The unit price bid per square foot shall include all labor, material, equipment, insurance, and incidentals necessary to complete the work, including but not limited to bedding material, job site sample(s), repairs, and clean up.

In addition no adjustment in payment shall be made for concrete removed to accommodate embedded units.

Payment will be made under:

Item No.	Item	Pay Unit
4.13 DSBS	EMBEDDED PRECAST CONCRETE DETECTABLE WARNING PAVERS FOR SBS STATIONS	S.F.

SECTION 4.18 RP
Root Pruning

4.18RP.1. INTENT. Under this section, this work shall consist of cleanly pruning, existing tree roots severed during construction operations, typically related to linear excavation, as shown in the contract documents and as directed by the Engineer.

4.18RP.2. DESCRIPTION. The Contractor shall root prune designated trees in accordance with the specifications and as directed by the Engineer, under permit issued by the New York City Department of Parks and Recreation (D.P.R.) which may be obtained from the Borough's Forestry Office.

4.18RP.3. MATERIALS AND METHODS.

(A) GENERAL

All root pruning procedures must be performed in the presence of the Tree Consultant (Item 4.21). The work shall be per where shown on the plans and as directed by the Engineer. Prior to any tree root pruning work, an Tree Consultant (Item 4.21)shall visually inspect each tree. Prior to pruning tree roots greater than 2 inches in diameter or tree roots within the tree critical root zone, Contractor shall contact the Borough Forester for approval. Pruning shall be performed in such a manner so as to avoid damage to other parts of the tree or other vegetation within proximity of the tree being pruned. The Contractor shall carefully protect from damage all existing vegetation, site features, and all other property which is to remain.

Existing tree roots greater than 1 inch in diameter, measured at the edge of excavation, and shall be pruned within 24 hours of the time they have been damaged by construction activity. The severed root shall be pruned at the edge of excavation, or 1 inch beyond the entire damaged portion of the tree root if damaged root extends beyond the edge of excavation into undisturbed soil.

The excavated area around the existing tree roots shall be backfilled as soon as construction activities permit with the specified or approved materials. If the excavated area around the existing tree roots is not backfilled within 24 hours, all roots shall be kept moist, with burlap covered with white plastic to prevent dessication. Burlap shall be checked for a minimum of two times a day, once in the morning and once in the afternoon, for a minimum of 48 hours until backfill is complete as directed by the Agency. If directed, soaker hoses shall be installed to facilitate properly moist conditions of excavated areas.

(B) EQUIPMENT

Pruning shall be in accordance with ANSI A300 Part 1 *Standard Practices Pruning and ANSI Z133.1 Arboricultural Operations Safety.* All cuts shall be cleanly made with sharp tools. The cutting surfaces of all tools, ladders, ropes, soles of workers shoes and other objects

coming into contact with the tree roots shall be washed with a disinfectant at the start of any work on a tree to prevent the spread of plant diseases.

All tools used and methods employed shall be as approved by the Engineer. The cutting surfaces of all tools, the soles of workmen's shoes and other objects coming into contact with the tree shall be washed with an approved disinfectant at the start of any work on a tree to prevent the spread of plant diseases.

(C) ROOT PRUNING

Certain trees should not be root pruned, such as trees in poor condition or trees that are leaning. In addition, some species do not respond well to root pruning, such as tulip tree (*Liriodendron tulipifera*), Chinese evergreen elm (*Ulmus parvifolia*), and callery pear (*Pyrus calleryana*). To minimize root pruning impacts, a tree assessment shall be conducted by the Tree Consultant (Item 4.21) and the root pruning contractor or subcontractor, prior to pruning. Both tree and site conditions need to be evaluated to determine the potential for injury and structural stability loss. The tree assessment shall list the species proposed for root pruning, the size in caliper of each tree and their locations, and shall be provided to the Engineer for his approval.

Root pruning of the tree shall be performed where directed by the Engineer, in consultation with the Tree Consultant (Item 4.21). At the conclusion of root pruning, the Contractor shall fertilize the tree with a fertilizer recommended by the Tree Consultant (Item 4.21) (Arborist) to stimulate root growth, and thoroughly water the tree. The Contractor shall further water the tree weekly for three months following the root pruning operations, then twice a month for the next three months, and finally, on a monthly bases for the next three months. The Contractor's responsibilities for watering the tree shall end after nine (9) months.

The Contractor shall be liable for any and all damage caused by root pruning operations to adjacent or nearby trees, plants and other growth, features and other real property. All damaged trees, plants, other growth features and other real property, and vehicles shall be replaced or restored or provided for to their original condition to the satisfaction of the Engineer.

(D) CLEANING AND DISPOSAL

All pruned materials and all other debris shall be removed from the site within 24 hours, and disposed of as directed by the Engineer.

4.18RP.4. MEASUREMENT. The quantity to be measured for payment shall be the number of trees actually root pruned to the satisfaction of the Engineer.

4.18RP.5. PRICE TO COVER. The contract price for Root Pruning shall be a unit price per each tree root pruned and shall cover the

cost of all labor, materials, plant, equipment, inspection, insurance, and incidentals required to complete the work including, but not limited to, watering and fertilizing the tree; all in accordance with the Contract Drawings, the specifications and the directions of the Engineer.

Maintenance Tree Pruning and the Transplanting of Trees shall be paid under separate items.

Payment will be made under:

Item No.	Item	Pay Unit
4.18 RP	ROOT PRUNING	EACH

SECTION 6.02 P
PNEUMATIC EXCAVATION AND BACKFILLING AROUND TREES

6.02P.1. INTENT.

The intent of this section is to perform pneumatic excavation and backfilling work at locations where trees exist within the work area and are required to remain, requires the protection of tree roots during excavation and backfilling, and implements, as needed, a temporary excavation support system. Work covered under this section shall be performed at the locations indicated on the Contract Drawings, in accordance with the specifications and directions of the Engineer.

6.02P.2. CONSTRUCTION DETAILS.

The work shall be in accordance with the contract drawings and as directed by the Engineer. Prior to any pneumatic excavation work, the following shall be performed:

(A) WORK SITE SAFETY

Pneumatic excavation shall be performed in compliance with all applicable OSHA regulations and the manufacturer's operating instructions. Adequate eye and ear protective equipment shall be worn by all crew members present at the work site. The Contractor shall be responsible to provide adequate equipment and perform pneumatic excavation techniques properly to preclude movement of any air-borne soils onto adjacent roadways or other areas beyond the designated work zone limits. Failure to contain and/or collect the excavated soil will result in the immediate termination of pneumatic excavation until soil containment and/or collection procedures are determined adequate by the Engineer. The Contractor shall keep the public at a safe distance from the work zone at all times by means approved by the Engineer.

(B) OPERATOR QUALIFICATIONS

The excavating tool shall be utilized only by personnel having at least one year of experience operating the pneumatic excavation tool. The Contractor shall submit to the Engineer written certification from the equipment manufacturer or supplier of the operator's training and experience in the use of the pneumatic excavation tool.

(C) CERTIFIED ARBORIST

Unless otherwise directed by the Engineer, all pneumatic excavation work shall be performed under the direction of an International Society of Arboriculture (ISA) Certified Arborist to be provided by the Contractor and paid for under TREE CONSULTANT Item No. 4.21.

(D) PRE-PNEUMATIC EXCAVATION MEETING

Prior to the start of such excavation, the Contractor and its approved Operator for pneumatic excavation shall attend a meeting arranged by the Engineer, the Contractor's Certified Arborist and other parties as appropriate, to review the requirements of this item including the schedule of operations, the mandatory presence of the Arborist, safety measures, reporting, etc. The Contractor is required to submit a schedule of its anticipated pneumatic excavations at this meeting.

(E) SUBMITTAL OF SHOP DRAWINGS

Where required, the Contractor shall submit design shop drawings for any temporary excavation support system to be used during the pneumatic excavation work. The shop drawings shall be prepared, signed, and sealed by a Professional Engineer currently licensed in the State of New York. The shop drawings shall be submitted to the Engineer at least two (2) weeks before commencement of excavation. Excavation work may not commence until the shop drawings are approved by the Engineer.

6.02P.3. RESPONSIBILITIES OF THE CONTRACTOR.

Prior to bidding, the Contractor shall examine the site and available information, and formulate methods of construction that will not result in any damage to existing trees during excavation and backfilling. In any event, the Contractor will be held liable for irreparable and/or irreversible damage to any trees harmed due to the Contractor's methods.

6.02P.4. MATERIALS.

Materials shall meet the following requirements, as modified by any supplemental landscape specifications or special notes included in the contract documents. Where indicated, refer to the latest revision/edition of Standard Specifications of the New York State Department of Transportation (NYSDOTSS):

(1) PNEUMATIC EXCAVATING TOOL. Excavation shall be performed through the use of a pneumatic excavation tool with the following requirements:

(a) The high air velocity excavation tool shall be specifically designed to fracture, pulverize, and displace porous and semi-porous soils without harming or causing damage to tree roots, existing subsurface utilities or other non-porous objects.

(b) The Contractor shall submit catalog cuts from the manufacturer verifying that the Pneumatic excavation tool meets the following criteria:

Rated Operating Pressure: 6.2 – 7.0 bar (101.5 psi)
Air Stream Velocity at Cutting Head: 2,200 – 2,500 km/hr (2,000 – 2,275 ft/sec)
Air Displacement: 2,800 – 5,000 liter/min (100 – 180 ft^3/min)

(2) AIR COMPRESSOR. The air compressor may be either a portable or truck-mounted unit and shall be adequately sized as required to power the pneumatic excavation tool in accordance with the manufacturer's recommendations for the pneumatic excavating tool.

(3) VACUUM TRUCK. A vacuum truck should be used to collect excavated spoil directly from the trench or pit.

(4) CONTAINMENT STRUCTURE. To prevent the spread of excavated soil onto adjacent roadways and areas beyond the designated work zone limits, the Contractor shall provide a mobile structure or barrier to contain the material dislodged by the pneumatic excavation tool from the trench or pit. Timber or corrugated metal shields, tents supported on tubular frames or other structures as approved by the engineer may be used.

(5) ROOT PROTECTION. The following are required for root protection:

Item	NYSDOTSS Section
Quilted Covers	711-02
Burlap	711-06

(6) BACKFILL. The following are required for backfill material:

Item	NYSDOTSS Section
Topsoil	713-01
Limestone	713-02
Fertilizer	713-03
Mycorrhizal Funghi	713-09
Compost	713-15

6.02P.5. EXCAVATION PROCEDURES.

The Contractor shall meet all requirements of this section, including transmitting any required submittals.

(A) DUST CONTROL

The work area shall be watered thoroughly at least twenty-four (24) hours in advance of, but no more than forty-eight (48) hours prior to the start of any pneumatic excavation to reduce the incidence of airborne dust resulting from the pneumatic excavation operation.

(B) EXCAVATION – GENERAL

All excavation using the pneumatic excavation tool shall be performed in accordance with the manufacturer's recommendations to remove soil without damage to the roots of trees, buried structures, and/or utilities either in or adjacent to the excavation. The Contractor shall excavate within limits designated for pneumatic excavation shown on the Contract Plans, or as directed by the Engineer, using the pneumatic excavating tool. When working near utilities, the Contractor shall be responsible to locate underground facilities as required under 16 NYCRR Part 753.

(C) EXCAVATION – TEMPORARY EXCAVATION SUPPORT SYSTEM

Approved sheeting and bracing shall be used where necessary to support the sides of the excavation, in order to: prevent damage to subsurface structures and adjacent buildings; safeguard persons and property; minimize inconvenience to traffic and the public; protect the structure to be installed; support the adjacent tree(s); and provide suitable and safe working conditions. Except as otherwise provided, deviations from the above will be permitted only where, in the judgment of the Engineer, such exception will not result in any of the hazards described above.

In cases where sheeting and bracing will not adequately protect adjacent structures from damage and settlement, the Contractor will be required to use such measures as are necessary to safely support and maintain adjacent and abutting property and structures, support the tree without causing damage to the tree, and to maintain the work safe to life, limb, and property.

All sheeting and bracing systems that the Contractor elects to use or that are ordered to use by the Engineer of the Department shall comply with the requirements of **Section 40.05, "SHEETING AND BRACING**," of the NYC Department of Design and Construction, Division of Infrastructure, Standard Sewer and Water Main Specifications, dated July 1, 2014, and must receive the approvals stated therein.

Unless otherwise specified in the Contract Drawings or these Specifications or specifically permitted in writing by the Engineer, the Contractor shall be required to withdraw and remove all sheeting and bracing simultaneously with the backfilling of trenches and excavations.

(D) ROOT PROTECTION

The Contractor shall place wet burlap or cotton mats upon both the fibrous and structural roots immediately after they have been exposed by the pneumatic excavating tool. The burlap or cotton covering may be removed to perform inspection or utility installation operations, but the Contractor shall be required to keep the burlap or cotton towels wet and the roots moist until backfilling is complete.

The Engineer shall be immediately informed of any damaged tree roots. No tree roots may be pruned except as specifically authorized by the Contractor's Arborist. In the case that the concentration of roots obstructs the placement of utilities, footings, or other structures, limited pruning may be necessary as directed by the Contractor's Arborist. Tree roots in excess of one (1) inch in diameter, measured at the edge of the excavation, shall be cut cleanly at the edge of excavation using a sharp cutting tool. All root pruning shall be performed under the direction of the Contractor's ISA Certified Arborist.

(E) UTILITY INSTALLATION

Utilities shall be installed as shown on the drawings, including bedding materials. In order to facilitate backfilling on an expedited basis, the Contractor shall install the materials for utilities in a continuous operation along with the pneumatic excavation operations to allow for backfilling of the trench within the same work shift.

Exposed root systems may impede utility installation within an open trench. Therefore, workers shall pass each individual item of utility construction carefully through the root system for placement and assembly within the excavated trench.

(F) BACKFILLING OPERATIONS

Excavations containing exposed tree roots shall be backfilled immediately after the Engineer inspects and approves the required construction work. The Contractor shall provide adequate work crews to backfill the excavated area within twenty-four (24) hours of excavation. Upon completion of inspection of installation work, the Contractor shall remove the burlap or cotton matting and commence backfilling operations.

Suitable excavated material may be used as backfill up to a depth of twelve (12) inches below finished grade. The existing soil shall be amended with humus, peat, peat moss, or source-separated compost in the ratio of one part organic to seven parts excavated soil. If required, provide additional clean backfill material. The Contractor shall properly dispose of excess and unsuitable excavated materials.

Backfilling shall be performed with care not to damage the exposed roots. The Contractor shall compact the backfill material under the direction of the Contractor's ISA Certified Arborist. The Contractor shall compact the backfill material to be commensurate with the density of the undisturbed adjacent soils unless otherwise directed by the Contractor's ISA Certified Arborist. Surface restoration including backfilling the twelve (12) inches of the excavation with approved topsoil, shall be performed separately under the appropriate items.

(G) TREE CONDITION REPORT

The Contractor shall supply the Contractor's ISA Certified Arborist with information as needed for the Contractor's Arborist to prepare periodic reports to the Engineer summarizing the number, type, and condition of trees adjacent to each area of pneumatic excavation; indicating the duration of open excavation; and identifying any root damage and actions taken.

6.02P.6. MEASUREMENT.

(A) The quantity of

ITEM NO. 6.02 PA - PNEUMATIC EXCAVATION AROUND TREES

to be measured for payment shall be the number of cubic yards of soil material removed by pneumatic excavation as described herein and to the satisfaction of the Engineer. The volume shall be obtained by vehicle measurement in cars, trucks, etc., at the place of removal. In determining the vehicle measurement, only water level loads that have been raked by the Contractor to a flat exposed surface will be accepted by the Engineer and no allowance will be made for any crown or peak of the load.

(B) The quantity of

ITEM NO. 6.02 PB - BACKFILLING AROUND TREES

to be measured for payment shall be the number of cubic yards of backfill material deposited around trees as described herein and to the satisfaction of the Engineer. The volume shall be obtained by vehicle measurement in cars, trucks, etc., at the place of deposit. For carload and truckload deliveries, only water level loads will be accepted and no allowance will be made for any crown or peak of the load.

6.02P.7. PRICES TO COVER.

(A) The contract price bid for

ITEM NO. 6.02 PA - PNEUMATIC EXCAVATION AROUND TREES

shall be a unit price per Cubic Yard to perform the pneumatic excavation work around trees as described herein, at the locations and to the limits indicated on the Contract Drawings. The unit price shall include the cost of all labor, materials, plant, equipment, professional engineering design services, insurance, and

incidentals needed to perform the work, including, but not limited to, disposal of excess and unsuitable materials; all in accordance with the contract drawings, the specifications and directions of the Engineer.

(B) The contract price bid for

ITEM NO. 6.02 PB - BACKFILLING AROUND TREES

shall be a unit price per Cubic Yard to backfill around trees as described herein, at the locations and to the limits indicated on the Contract Drawings. The unit price shall include the cost of all labor, materials, plant, equipment, professional engineering design services, insurance, and incidentals needed to perform the work, including, but not limited to, furnishing and placing backfill materials; all in accordance with the contract drawings, the specifications and directions of the Engineer.

No separate payment will be made for replacement trees, as required by NYCDPR, that the Contractor shall acquire and plant as a result of damage to trees caused by the Contractor's excavation and/or backfilling methods.

No separate payment will be made for sheeting and bracing systems that the Contractor elects to use or that are ordered to use by the Engineer.

Payment will be made under:

Item No.	Item	Pay Unit
6.02 PA	PNEUMATIC EXCAVATION AROUND TREES	C.Y.
6.02 PB	BACKFILLING AROUND TREES	C.Y.

SECTION 6.27 D
Demolition, Removal and Disposal of Structures

6.27D.1. DESCRIPTION. Under this Section, the Contractor shall furnished all labor, material, equipment, insurance, and necessary incidentals required for the demolition, removal and disposal, away from the site, of planters, concrete barriers, bicycle racks, and benches; all in accordance with the Contract Drawing, the specifications and the directions of the Engineer.

6.27D.2. METHODS. All work shall be done in accordance with the applicable requirement of the Section 6.27 - Demolition of Structures, of the Standard Highway Specifications, and as amended below.

Any holes resulting from the demolition and removal work under this section shall be backfilled and cleaned up, in compliance with subsections 6.27.4(E) and (F), such that no trip hazard remains. No additional payment will be made for this work.

a) PLANTERS. Planters marked for removal under Item No. 6.27 DP, shall be removed and disposed of away from the site along with all appurtenances, as directed by the Engineer.

b) CONCRETE BARRIERS. Concrete Barriers marked for removal under Item No. 6.27 DB, shall be separated from their anchor bolts, if any, before removal. The concrete barriers shall then be removed and disposed of away from the site along with all appurtenances, as directed by the Engineer. Any remaining anchor bolts shall either be cut flush with the existing pavement or completely removed and any holes left by the removal operation shall be backfilled at no additional cost to the City.

c) BICYCLE RACKS. Bicycle Racks marked for removal under this Item No. 6.27 DBI, shall first be separated from their anchor bolts. The bicycle racks shall then be removed and disposed of away from the site. Any remaining anchor bolts shall either be cut flush with the existing pavement or completely removed, at the Contractor's option.

Should the anchor bars be completely removed and the area be open to the public, any holes or damaged pavement resulting from the removal work shall immediately be backfilled with temporary asphalt concrete mixture such that no trip hazards remains. No additional payment will be made for this work.

d) BENCHES. Benches marked for removal under Item No. 6.27 DBH, shall be first separated their anchor bolts. The benches shall then be removed and disposed of away from the site and then the bench foundations shall be excavate and dispose of as directed by the Engineer. All excavations shall be backfilled to the satisfaction of the Engineer, at no additional cost to the City.

6.27D.3. MEASUREMENT. The quantities to be measured for payment under each item shall be the number of PLANTERS, CONCRETE BARRIERS, BICYCLE RACKS, and BENCHES actually removed from the site, to the satisfaction of the Engineer.

6.27D.4. PRICES TO COVER. The unit prices bid for each Planter, Concrete Barrier, Bicycle Rack and Bench removed from the site shall cover the cost of furnishing all labor, materials, plant, equipment, insurance, and necessary incidentals required and to complete the work in accordance with the contract drawings, the specifications and the directions of the Engineer.

Payment will be made under:

Item No.	Item	Pay Unit
6.27 DP	DEMOLITION, REMOVAL AND DISPOSAL OF PLANTERS	EACH
6.27 DB	DEMOLITION, REMOVAL AND DISPOSAL OF CONCRETE BARRIERS	EACH
6.27 DBI	DEMOLITION, REMOVAL AND DISPOSAL OF BICYCLE RACK	EACH
6.27 DBH	DEMOLITION, REMOVAL AND DISPOSAL OF BENCHES	EACH

SECTION 6.52 FED
Uniformed Flagperson

6.52FED.1. INTENT. This section describes the employment of uniformed flagpersons to direct and detour traffic.

6.52FED.2. DESCRIPTION. The Contractor shall furnish an adequate number of flagpersons to control vehicular and pedestrian traffic when it is necessary to maintain alternating one-way traffic in one lane of a two-way roadway, and at all other locations where construction operations, construction vehicles and equipment, and temporary traffic patterns related to the construction operations require positive temporary traffic control for safe, efficient traffic operations.

6.52FED.3. METHODS. All flagpersons shall be English speaking and adequately trained in flagging operations by a recognized training program such as that provided by the American Traffic Safety Services Association, the National Safety Council, unions or construction industry associations, or by an individual who holds a current certification as a flagger training instructor from such a program.

All flagpersons, their apparel, hand-signaling devices, active two-way radios, and procedures to be used by them shall be in compliance with the requirements of Chapter 6E. FLAGGER CONTROL, in the Federal "Manual on Uniform Traffic Control Devices for Streets and Highways" 2009 Edition, or later edition.

Prior to the start of flagging operations, the Contractor shall provide to the Engineer a list of certified flagpersons to be used in the contract, identifying the source of flagger training for each individual. When requested by the Engineer, flagpersons shall demonstrate their competency in flagging procedures. Flagpersons not competent in flagging procedures to the satisfaction of the Engineer shall be retrained or replaced at once.

Flagpersons are to be paid not less than the most recent prevailing wages rates established for Laborers as set by the NYC Comptroller or the US Department of Labor, whichever is higher at the time the work is being performed.

The Contractor will be given a minimum of 12 hours advanced notice by the Engineer as to when to furnish a flagperson.

6.52FED.4. METHOD OF MEASUREMENT. The fixed price lump sum shown in the bid proposal for this item shall be considered the price bid, although actual payment will be based on the authorized work performed by the Uniformed Flagpersons. The fixed sum is not to be altered in any manner by the bidder.

It is agreed that the quantity to be measured for payment shall be the number of person-hours of uniformed flagperson service actually performed, as authorized by the Engineer.

Laborers who are not uniformed flagperson will not be measured for payment as flagperson under this item.

6.52FED.5. BASIS OF PAYMENT. The Contract price for this item shall be a lump sum price for the work performed under this item and shall be equal to the total sum of the

amount of wages paid for all authorized Uniformed Flagpersons performing vehicular and pedestrian traffic management, with a twelve (12%) percent markup for Overhead, except that no percentage for overhead will be allowed on Payroll Taxes or on the premium portion of overtime pay or on sales and personal property taxes; plus ten (10%) as compensation for Profit, except that no percentage for profit will be allowed on Payroll Taxes or on the premium portion of overtime pay or on sales and personal property taxes; as described in Article 26 of the Standard Construction Contract.

Overhead shall include without limitation, all costs and expenses in connection with administration, management superintendence, and all material costs for their apparel, hand-signaling devices, active two-way radios, and any other equipment required, and insurance required by Schedule A of the General Conditions other than Workers' Compensation Insurance.

The hourly rate per person-hour shall be the prevailing wage rate for Laborers in effect at the time of the work to control and detour traffic, as shown on the Contract Drawings or as directed by the Engineer.

The Contactor shall be required to submit to the Engineer satisfactory evidence of payment on a New York State certified payroll report forms. No retainage will be withheld by the Department on such payments made under this section.

The total estimated cost of this item is the "fixed sum" amount shown for this item in the Bid Schedule. No guarantee is given that the actual total cost for this item will in fact be the "fixed sum" amount. The "fixed sum" amount is included in the total bid solely to insure that sufficient monies will be available to pay the Contractor for these services.

The "fixed sum" is for bidding purposes only and shall not be varied in the bid. The Contractor will be paid for the actual amount regardless of the fixed sum, which may be more or less than the fixed sum amount.

The Contractor shall maintain separate books of accounts and shall not charge any portion of the cost of wages for Uniformed Flagpersons to another part of the work. Payment and partial payments under this item shall be treated separately from the rest of the contract items.

The New York State certified payroll report forms shall be submitted to the Engineer on a monthly basis and shall include the signed copies of the daily report.

Payment will be made under:

Item No.	Item	Pay Unit
6.52 FED	UNIFORMED FLAGPERSON	FIXED SUM

SECTION 6.77 R
Metal Trash Receptacle

6.77R.1. INTENT. This section describes the furnishing and installation of metal trash receptacles.

6.77R.2. DESCRIPTION. Under this Section, the Contractor shall furnish and install trash receptacles, in accordance with the Contract Drawings, the specifications and directions of the Engineer.

6.77R.3. MATERIALS. Materials shall comply with the following:

6.77R.3.1. REFERENCES.

(A) ASTM Testing Standards:

1. ASTM B 108 - Standard Specification for Aluminum-Alloy Permanent Mold Castings.
2. ASTM B 117 - Standard Practice for Operating Salt Spray (Fog) Apparatus.
3. ASTM B 221 - Standard Specification for Aluminum and Aluminum-Alloy Extruded Bars, Rods, Wire, Profiles, and Tubes.
4. ASTM D 522 - Standard Test Methods for Mandrel Bend Test of Attached Organic Coatings.
5. ASTM D 523 - Standard Test Method for Specular Gloss.
6. ASTM D 2247 - Standard Practice for Testing Water Resistance of Coatings in 100% Relative Humidity.
7. ASTM D 2794 - Standard Test Method for Resistance of Organic Coatings to the Effects of Rapid Deformation (Impact).
8. ASTM D 3359 - Standard Test Methods for Measuring Adhesion by Tape Test.
9. ASTM D 3363 - Standard Test Method for Film Hardness by Pencil Test.
10. ASTM G 155 - Standard Practice for Operating Xenon Arc Light Apparatus for Exposure of Non-Metallic Materials.

(B) ISO Testing Standards:

1. ISO 1520 - Paints and Varnishes - Cupping Test.
2. ISO 2815 - Paints and Varnishes - Buchholz Indentation Test.

6.77R.3.2. SUBMITTALS. Follow the procedures in the General Conditions of **Section 1.06.31** of the NYCDOT Standard Highway Specifications.

(A) Product Data: Submit manufacturer's product data, storage and handling requirements and recommendations, installation methods and available colors, styles, patterns and textures.

(B) Samples: Submit three (3) samples of specified color as applied to an 8 inch by 8 inch square of specified metal for approval by Engineer.

(C) Warranty: Guarantee for a minimum of three years.

6.77R.3.3. QUALITY CONTROL.

(A) Manufacturer's Qualifications: Manufacturer shall be regularly engaged in manufacture of site furnishings for a minimum of three years.

(B) Product Support: All Products shall be supported with complete engineering drawings and design patents.

(C) Production: Orders shall be filled within 10 weeks.

6.77R.3.4. DELIVERY, STORAGE, AND HANDLING.

(A) Delivery: Deliver materials to site in manufacturer's original, unopened containers and packaging, with labels clearly identifying product name and manufacturer.

(B) Storage: Store materials in clean, dry area in accordance with manufacturer's instructions. Keep materials in manufacturer's original, unopened containers and packaging until installation.

(C) Handling: Protect materials and finish during handling and installation to prevent damage.

6.77R.3.5. WARRANTY.

1. Products will be free from defects in material and/or workmanship for a period of three years from the date of substantial completion.
2. The warranty may exclude damage resulting from accident, misuse, tampering, negligence, or abuse.
3. Any items found to be defective upon inspection by the Engineer shall be repaired or replaced to the satisfaction of the Engineer at no additional cost to the City.

6.77R.3.6. MANUFACTURER. Product to be as manufactured by:

(A) Manufacturer: Landscape Forms, Inc., 431 Lawndale Avenue, Kalamazoo, Michigan 49048. Toll Free (800) 521-2546. Phone (269) 381-0396. Fax (269) 381-3455.
Website: www.landscapeforms.com
E-mail: Studio431-Sales@landscapeforms.com.

(B) Trash Receptacle distributors:

1. Arenson: Phone (212)633-2400
2. AFD: Phone (212)721-7100
3. Empire: Phone (212)607-5566
4. Or approved equivalent.

6.77R.3.7. PRODUCTS.

(A) Trash Receptacle: shall be "Lakeside", top-opening, 35 gallon capacity, with "Grass" pattern, 36" height, 21" diameter, surface mounted, with black liner. Top shall be fabricated of 14 gauge spun steel. Body shall be fabricated of 10 gauge HRPO steel welded to a 2" tall toe ring. Liner shall be constructed of low-density polyethylene with 0.100" wall thickness.

(B) Anchor Bolts shall be of the maximum size fitting provided anchor openings, and shall be Type 304 Stainless Steel, 4" in length.

(C) Recycled Content:

1. Recycled Material Content: Minimum 83 percent.
2. Post-Consumer Material Content: Minimum 54 percent.
3. Pre-Consumer Material Content: Minimum 29 percent.
4. Recyclable: 100 percent.

6.77R.3.8. FINISHES.

(A) Finish on Metal:

1. Primer: Rust inhibitor.
2. Topcoat: Thermosetting TGIC polyester powder coat. UV, chip, and flake resistant.
   a. Gloss Consistency, Gardner 60 Degrees, ASTM D 523: Plus or minus 5 percent from standard.
   b. UV Resistance, Color and Gloss, ASTM G 155, Cycle 7: Delta E less than 2 at 2.0 mils and less than 20 percent loss.
   c. Cross-Hatch Adhesion, ASTM D 3359, Method B: 100 percent pass.
   d. Flexibility Test, Mandrel, ASTM D 522: 3 mm at 2 mils.
   e. Erichsen Cupping, ISO 1520: 8 mm.
   f. Impression Hardness, Buchholz, ISO 2815: 95.
   g. Impact Test, ASTM D 2794: 60 inch-pounds at 2.5 mils.
   h. Pencil Hardness, ASTM D 3363: 2H minimum.
   i. Corrosion Resistance, 1,500-Hour Test, ASTM B 117: Max undercutting 1 mm.
   j. Humidity Resistance, 1,500-Hour Test, ASTM D 2247: Max blisters 1 mm.
3. Powdercoat Color: Shall be "Silver".

6.77R.4. METHODS. The following methods of installation shall be used:

(A) Examination:

1. Examine areas to receive trash receptacle.
2. Notify the Engineer of conditions that would adversely affect installation or subsequent use.

3. Do not begin installation until unacceptable conditions are corrected and acceptance verified in writing by Engineer.

(B) Assembly: Trash receptacle shall be shop assembled.

(C) Installation:
1. Finish Damage: Repair minor damages to finish in accordance with manufacturer's instructions and as approved by Engineer.
2. Component Damage: Remove and replace damaged components that cannot be successfully repaired as determined by Engineer.
3. Install receptacles level and plumb on concrete foundations, as shown on the drawings, in accordance with manufacturer instructions.
4. Anchor trash receptacles securely in place.

(D) Damage Repair: Repair minor damages to finish in accordance with manufacturer's instructions and as approved by the Engineer. Remove and replace damaged components that cannot be successfully repaired as determined by Engineer.

(E) Cleaning: Clean receptacles promptly after installation in accordance with manufacturer's instructions. Do not use harsh cleaning materials or methods that could damage finish.

(F) Protection: Protect installed trash receptacles to ensure trash receptacles will be without damage or deterioration at time of Substantial Completion.

6.77R.5. MEASUREMENT. The quantity of Metal Trash Receptacles to be measured for payment shall be the actual number of receptacles installed at the site, to the satisfaction of the Engineer.

6.77R.6. PRICE TO COVER. The unit price bid for EACH Metal Trash Receptacle shall include the cost of furnishing all labor, materials, equipment, insurance, and incidentals necessary to furnish, assemble and install receptacles including, but not limited to, hardware; all in accordance with the Contract Drawings, the specifications and the directions of the Engineer.

Payment will be made under:

Item No.	Item	Pay Unit
6.77 R	METAL TRASH RECEPTACLE	EACH

SECTION 6.94 TFD
Thru-Flow Trench Drain

6.94TFD.1. Intent. This section describes furnishing and installation of open ended trench drains to allow continuous thru-flow of storm-water run-off. This section includes precast concrete channel, cast-in frame and trench drain grate cover.

6.94TFD.2. Description. The trench drain shall be a surface drainage system that is installed so that both ends are open to allow for continuous thru-flow of storm water with a nominal clear opening of 4" wide. The system shall be provided complete from a single manufacturer, unless written approval from the manufacturer is provided for any substitutions provided. The system shall include a precast polymer concrete body, stainless steel edge rail, stainless steel grate cover and locking mechanism.

The trench drain system shall be based on the drawings, these specifications, and "KlassikDrain KS100S" trench drain system complete with "ACO Type 447Q" ADA Heelguard stainless steel grate with "QuickLok" integral locking mechanism as manufactured by ACO Polymer Products Inc, or approved equal.

6.94TFD.3 Manufacturers.

1. ACO Polymer Products Inc., P.O. Box 245, Chardon, OH 44024, (800)-543-4764;
2. ABT, Inc., P.O. Box 837, 259 Murdock Rd, Troutman, NC 28166, (800)-438-6057;
3. Jay R. Smith MFG. Co., P.O. Box 3237, 2781 Gunter Park Dr. E., Montgomery, AL 36109, (334)-277-8520; or,
4. Approved Equal

6.94TFD.4. Materials.

1. Trench Body: The trench drain system body shall be manufactured from polyester polymer concrete with minimum properties as follows:
   a. Compressive Strength: 14,000 psi
   b. Flexural Strength: 4,000 psi
   c. Water Absorption: 0.07%
   d. Frost Proof
   e. Salt Proof
   f. Dilute acid and alkali resistant
   g. Minimum Wall Thickness: 0.50"

   The body shall have a nominal clear opening of 4" wide with an overall minimum width of 5.10". The pre-cast body units shall be manufactured with a full radius trench bottom consisting of a neutral invert slope or an invert slope of 0.6%.

   The body shall have male to female interconnecting end profiles and cast in anchoring features on the outside wall to ensure maximum mechanical bond to the surrounding bedding and pavements surface.

2. Edge rails: The edge rails shall be manufactured from Type 304 stainless steel with a minimum thickness of 1/8". The edge rails shall be integrally cast into the body by the manufacturer to ensure maximum homogeneity between polymer concrete body and edge rail.

3. Grates: The grates shall be manufactured from Type 304 stainless steel by the same manufacturer as the trench body and edge rails with the following minimum properties:

    a. Independently certified to meet Load Class A to DIN 19580 – 3,500 lbs – 70psi.
    b. 11 gage
    c. Slotted openings with a maximum size of 0.20" (in the direction of travel) by 0.82" (perpendicular to the direction of travel).
    d. Width as per manufacturer specifications to fit trench drain system selected.
    e. Length as per manufacturer specifications.
    f. Complies with all related sections of the 2010 ADA guidelines.
    g. Complies with ASME: A112.6.3 – 2001: Section 7.12 Heel Resistant Strainers and grates.
    h. Bicycle Tire Penetration Resistant to AS3996-2006.

4. Locking Mechanisms: The locking mechanism shall be manufactured from Type 304 stainless steel and shall be an integral component of the trench drain system.

6.94TFD.5. **Methods.** The Contractor shall be responsible for all coordination of components (cast-in-place concrete and trench drain system components) in order to install the trench drain system so that the grate cover is flush with the surrounding surface and the sides of the trench drain body are flush with the sides of the cast-in-place concrete ramp or other structure.

1. Submit manufacturer's product data for approval.
2. Submit composite shop drawings, showing sizes, dimensions, finishes, installation and coordination details to minimize field preparation such as cutting and ensure proper drainage will be achieved.
3. Install trench drains at locations indicated on the drawings and in accordance with the manufacturer's instructions.
4. The trench drain system shall be installed in accordance with the manufacturer's installation instructions and recommendations.

6.94TFD.6. **Measurement.** The quantity to be measured for payment shall be the linear feet of installed trench drain system actually incorporated into the work to the satisfaction of the Engineer.

6.94TFD.7. **Price to Cover.** The contract price bid per linear foot of trench drain system shall cover the cost of furnishing all labor, materials, plant, equipment, insurance, and necessary incidentals required to furnish and install the complete trench drain system including, but not limited to, furnishing and installing the trench body, edge rails, grate cover and locking mechanism, all shop, and field painting; all in accordance with the Contract Drawings, the specifications and the directions of the Engineer and the Manufacturer.

Payments will be made under:

Item No.	Item	Pay Unit
6.94 TFD	THRU-FLOW TRENCH DRAIN	L.F.

SECTION 7.49
STEEL TREE PIT GUARD

7.49.1. INTENT. This section describes the fabrication and installation of a Steel Tree Pit Guard.

7.49.2. DESCRIPTION. Under this Section, the Contractor shall furnish and erect Steel Tree Pit Guards of the types and number of sides (3 sided or 4 sided) specified in accordance with the Contract Drawings, the specifications, New York City Department of Parks and Recreation Tree Planting Standards (Tree Planting Standards), and directions of the Engineer.

7.49.3. MATERIALS:

(A) Steel Tree Pit Guard shall be constructed of solid bars, posts, rails, and spikes of the sizes shown in the Tree Planting Standards, unless specifically noted as lightweight. All material shall conform to Specifications C1015 of the American Iron and Steel Institute (AISI).

Steel Tree Pit Guard Fabricators shall be one of the following or an approved equivalent fabricator:

1. Art Metals, LLC
   76 Edsall Drive
   Sussex, NJ 07461
   718-834-0224

2. A&T Iron Works,
   25 Cliff Street
   New Rochelle, NY 10801
   800-523-0973
   www.atironworks.com

3. Kaufman Iron Works
   202 12th Avenue
   Paterson, NJ 07501
   800-442-4283
   www.kaufmaniron.com

Steel Tree Pit Guards shall be fabricated in strict accordance with the contract drawings, Tree Planting Standards, and approved Shop Drawings. Posts and rails shall be formed into panels of the shapes in the Tree Planting Standards and joints completely welded with welds of proper size and shape. All welds ground smooth to a neat finish.

Posts, pickets and spikes shall in all cases be truly vertical. Rails and bars shall be parallel to grade as shown on the contract drawings.

(B) PAINT: Steel Tree Pit Guards shall receive three (3) coats of paint. A field applied touch-up coat shall be applied at the discretion of the Engineer. Immediately prior to painting, all surfaces of framework shall be thoroughly free of debris. All surfaces that are rust free shall be treated in accordance with SP-1, Solvent

Cleaning. Treatment shall be performed with a solvent such as mineral spirits, xylol, or turpentine to remove all dirt, grease, and foreign matter. Surfaces that show evidence of scale and rust shall be cleaned in accordance with SP-2, Hand Tool Cleaning, a method generally confined to wire-brushing, sandpaper, hand scrapers, or hand impact tools or SP-3, Power Tool Cleaning, a method generally confined to power wire brushes, impact tools, power sanders, and grinders in order to achieve a sound substrate. After the Guard have been cleaned and prepared, they shall be painted as follows:

1. First Coat (Shop Applied): Sherwin Williams # E41N1 Metal Primer, Brown, or approved equivalent. Primer is an alkyd oil, flat finish coating having a dry film thickness of 3 to 4 mils. Paint requires twenty four (24) hours drying time before recoating. Performance shall meet or exceed the standards of Federal Specification TT-P-86H.

2. Second Coat (Shop Applied): Sherwin Williams High Solids Alkyd Metal Primer, B50 Series, Reddish Brown, or approved equivalent. Primer is an alkyd, low luster coating having a dry film thickness of 3-5 mils. Paint requires four (4) hours drying time before recoating (with alkyds).

3. Third Coat (Shop Applied): Sherwin Williams Silicone Alkyd Low VOC B56Z Black, or approved equivalent. Topcoat is a silicon alkyd, high gloss coating having a dry film thickness of 2 - 4 mils. Paint requires sixteen (16) hours drying time @ 45° F; eight (8) hours @ 77°F. (tack free).

Alternative paint manufacturers shall be Devoe and Reynolds, Co.; Pratt and Lambert, Inc.; Pittsburgh Plate Glass Company; Sapolin; or other approved manufacturer. All paints used shall be compatible and the product of the same manufacturer.

All paints shall be applied when ambient air temperature is forty-five (45) degrees F. and rising and when surfaces to be painted are moisture free. No painting will be allowed below the minimum ambient air temperature. In addition, no painting will be allowed below the temperature at which moisture will condense on surfaces. Refer to the Dew Point Chart at the end of this section to find the minimum allowed moisture free temperature.

DEW POINT CALCULATION CHART (FAHRENHEIT)
AT 30 HG BAROMETRIC PRESSURE

Ambient Air Temperature °F

% Relative Humidity	20	30	40	50	60	70	80	90	100	110	120
90	18	28	37	47	57	67	77	87	97	107	117
85	17	26	36	45	55	65	75	84	95	104	113
80	16	25	34	44	54	63	73	82	93	102	110
75	15	24	33	42	52	62	71	80	91	100	108
70	13	22	31	40	50	60	68	78	88	96	105
65	12	20	29	38	47	57	66	76	85	93	103
60	11	19	27	36	45	55	64	73	83	92	101
55	9	17	25	34	43	53	61	70	80	89	98
50	6	15	23	31	40	50	59	67	77	86	94
45	4	13	21	29	37	47	56	64	73	82	91
40	1	11	18	26	35	43	52	61	69	78	87
35	-2	8	16	23	31	40	48	57	65	74	83
30	-6	4	13	20	28	36	44	52	61	69	77

DewPoint: The temperature at which moisture will condense on the surface. No coatings should be applied unless the surface temperature is a minimum of 5°F above this point. Temperature must be maintained during curing.

Example: If air temperature is 70°F and relative humidity is 65%, the dewpoint is 57°F. No coating should be applied unless the surface temperature is 62°F minimum.

7.49.4. INSTALLATION.

(A) Steel Tree Pit Guards shall be fabricated in strict accordance with the contract drawings and approved shop drawings. Posts, pickets, bars, and rails shall be formed into panels of the shapes shown on the Contract Drawings. Joints shall be completely welded with welds of proper size and shape. All welds shall be ground smooth to a neat finish. Connections shall be provided as indicated on the plans. Welding shall conform to current industry requirements for this type of application.

(B) Posts, spikes and pickets shall, in all cases, be set truly vertical. Rails and bars shall be parallel to grade as shown on the Contract Drawings. Dimensions of individual tree pit guards may vary as required by existing site conditions, in accordance with the directions of the Engineer. Any guards not set plumb and true to line and grade shall be removed and replaced at the Contractor's expense. The Contractor shall maintain the Guards during the life of the contract and shall repair replace all members that are disturbed, damaged or destroyed.

7.49.5. SUBMITTALS.

(A) PRODUCT DATA: For manufacturer's product lines assembled from components listed in materials.

(B) SHOP DRAWINGS: Include plans, elevations for entire lengths for

planters typical of a 3-sided tree guard. Drawings shall indicate attachments, anchoring and connecting hardware. Indicate all field and shop welds.

(C) SAMPLES: Short rails, posts and samples showing finishes.

(D) QUALIFICATION DATA: For firms and persons specified to demonstrate their capabilities and experience. Include lists of completed projects with project names and addresses, names of addresses of designers and owners, and other information specified.

(E) PRODUCT TEST REPORTS: Based on evaluation of comprehensive tests performed by a qualified testing agency, including finish, indicating compliance with referenced standard.

(F) MOCK-UP: Assembled samples of Guard system, made from full-size finished components, including all connecting hardware. Show method of finishing members at intersection and posts. Sample shall be full height and may be used in final installation if workmanship and finishes are accepted to Engineer.

7.49.6. MEASUREMENT.

The quantity of STEEL TREE PIT GUARD to be measured for payment shall be the number of LINEAR FEET of each type of tree pit guard erected, complete, in place to the satisfaction of the Engineer, measured along the center line of the top rail.

7.49.7. PRICE TO COVER.

The unit price bid per LINEAR FOOT of each type of STEEL TREE PIT GUARD shall cover the cost of all labor, material, equipment, insurance, and incidentals required to fabricate, furnish and erect steel tree pit guards including, but not limited to, welding, painting, and furnishing and placing the steel tree pit guard complete with rails, posts and spikes; all in accordance with the Contract Drawings, the specifications and as directed by the Engineer.

Payment will be made under:

Item No.	Item	Unit
7.49 A	STEEL TREE PIT GUARD TYPE A	L.F.
7.49 B	STEEL TREE PIT GUARD TYPE B	L.F.
7.49 C	STEEL TREE PIT GUARD TYPE C	L.F.
7.49 D	STEEL TREE PIT GUARD TYPE D	L.F.

SECTION 7.50 CB
CITY BENCH

7.50 CB.1. DESCRIPTION. Under this Section, the Contractor shall furnish and install each bench in accordance with the Contract Drawings, the specifications and directions of the Engineer.

7.50 CB.2. MATERIALS.

(A) Bench shall be manufactured by Landscape Forms, Inc., 431 Lawndale Avenue, Kalamazoo, Michigan 49048. Toll Free: (800) 521-2546. Phone (269) 381-0396. Fax (269) 381-3455. Website: www.landscapeforms.com.

(B) Bench Distributors:

1. Landscape Forms, Inc.
   431 Lawndale Avenue
   Kalamazoo, Michigan 49048
   (800) 521-2546; (269) 381-0396

2. Arenson Furniture Rental
   1115 Broadway
   New York, 10010
   (212) 633-2400

3. AFD Contract Furniture Inc.
   810 7th Avenue,
   New York NY, 10019
   (212) 721-7100

4. Empire Office Inc.
   105 Madison Ave. #15
   New York, NY 10016
   (212) 607-5566

5. or other approved supplier.

(C) STYLES:

BACKED BENCH
"QASF0886-005"
- Length: 89-1/4 inches
- Seat Height: 18 inches
- Seat Depth: 19 inches
- Seat Width: 22 inches
- Seat Radius: 79 inches
- Arm Height: 24-7/8 inches
- Back Radius: 70 inches
- Back Angle: 9-1/2 degrees
- Seat Included Angle: 98-1/2 degrees
- Height: 34 inches

BACKLESS BENCH
"QASF0886-006"
- Length: 89-1/4 inches
- Seat Height: 17-3/4 inches
- Seat Depth: 22-5/8 inches
- Seat Width: 22-5/8 inches
- Seat Radius: 79 inches
- Arm Height: 24-7/8 inches

(D) MOUNTING: Bench legs shall have steel anchor tabs to allow for surface mounting of bench.

(E) HARDWARE: Anchor bolts used to secure the benches to pavements shall be either stainless steel or hot-dipped galvanized steel. Type and dimensions of all bolts, nuts, and washers shall be as indicated on the Contract Drawings. Threads of all bolts shall have the ends upset after installation of nuts so as to render the connection vandal resistant.

7.50 CB.3. METHODS.

(A) DELIVERY, STORAGE, AND HANDLING. Deliver materials to site in manufacturer's original, unopened containers and packaging, with labels clearly identifying product name and manufacturer. All material shall be bundled and fully supported during shipping and storage to prevent creep.

Material manufacturer's directions for storage and use shall be adhered to. Material surfaces shall be protected during shipment so as to arrive mar and scratch free in the field.

Keep materials in manufacturer's original, unopened containers and packaging until installation. Any damage or excessively scratched will be rejected and replaced with new. All material must be straight and true when placed in the construction. Store any and all tooling, fixtures, process drawings and project files until last project phase is complete. Deliver all tooling, fixtures and documentation to the Engineer upon completion of the work.

(B) INSTALLATION. Benches shall be uniquely fabricated and pre-assembled before being installed in their final location in the work. Benches shall be installed in their final position and properly secured in place, as indicated on the Contract Drawings.

Protect installed product to ensure that, except for normal weathering, benches will be without damage or deterioration at time of Substantial Completion.

(C) TOUCHUP AND REPAIR: For all clean welds, bolted connections and minor damage caused by transportation and installation to the metal powder coated surface, the touch-up finish shall be in conformance with manufacturer's recommendations. Provide touch-up such that the repair is not visible from a distance of six feet (6'). The touch up color shall match the color of the powder coat.

7.50 CB.4. SUBMITTALS. All submittals shall be as per **Section 1.06.31** of the NYC Department of Transportation's Standard Highway Specifications, and in accordance with the following requirements:

(A) WARRANTY: The manufacturer guarantees a standard warranty that the products will be free from defects in material and/or workmanship for a period of three years from the date of invoice.

7.50 CB.5. MEASUREMENT. The quantity to be measured for payment shall be the number of City Benchs of each type installed at the site to the satisfaction of the Engineer.

7.50 CB.6. **PRICES TO COVER.** The price bid shall be a unit price for each type of City Bench and shall include the cost of all labor, materials, plant, equipment, insurance, and incidentals necessary to furnish and install each type City Bench, complete, including, but not limited to, all painting, hardware, anchors, and the furnishing of an approved complete prototype sample; all in accordance with the Contract Drawings, the specifications and the directions of the Engineer.

Excavation and concrete foundation will be paid for separately under their respective Contract Items.

Payment will be made under:

Item No.	Item	Pay Unit
7.50 CB	CITY BENCH WITH BACK	EACH
7.50 CBB	CITY BENCH BACKLESS	EACH

SECTION 7.50 TLB
DOT Leaning Bar

7.50TLB.1. WORK. Under this section, the Contractor shall furnish and install each DOT" leaning bar in accordance with the Contract Drawings, the specifications and directions of the Engineer, in consultation with the City's Landscape Architect.

7.50TLB.2. MATERIALS. DOT Leaning Bars or leaning bar items furnished by the following suppliers, or approved equivalent, are acceptable for use in this contract:

(A) STRUCTURAL FRAME and POSITION SEPARATORS: The leaning bar's structural frame and position separators, as defined on prototype contract documents, shall be fabricated entirely of stainless steel. The steel shall meet the requirements of ASTM A276, Grade MT (316) with finish no. 6. Non-directional dull satin blend. Proof of the producer's certification that the material was manufactured and tested in accordance with ASTM A276, and a certified report of the test results shall be furnished at its time of shipment. The frame shall be fabricated in strict accordance with the approved shop drawings.

(B) CAST ALUMINUM SEATS: The leaning bar's seats are anodized petrobond sand cast aluminum, per ASTM B26/B26M, Alloy ANSI A356.0-T6, Class 1, clear anodic finish; AA-M12C22A41 (mechanical: nonspecular as fabricated; chemical finish; deep etched medium matte; anodic coating; architectural class 1; clear coating 0.018mm or thicker) complying with AAMA 611-14. The seats shall be fabricated in strict accordance with the approved shop drawings.

(C) HARDWARE: All bolts, fasteners, and fixings to be stainless steel and tamper proof. They shall be Group 2 fasteners (Alloy 316 or 316L), and shall conform to the requirements of ASTM 593 (bolts, rods), ASTM F879 (screws), ASTM F594 (nuts), and ASTM A240 (washers, plates).

(D) WELDING: All welding shall be in complete accordance with the New York State Steel Construction Manual (SCM), 3rd Edition, 2008 with latest addendums. All welding electrodes shall be E316-16 as specified in the SCM and shall be in complete accordance with the standards of the American Welding Society, except as governed by the SCM.

7.50TLB.3. STAINLESS STEEL FABRICATION. After components are fabricated, remove tool and die marks and strength lines or blend into finish. Grind and polish surfaces to uniform finish indicated, free of cross scratches. After polishing, passivate and rinse surfaces. Remove embedded foreign matter and leave surfaces chemically clean. Stainless steel components must be stored and processed in a ferrous free environment and must be handled carefully to prevent ferrous contamination. Perform all work in accordance with ASTM A380.

Welds and weldments shall conform to the requirements of the American Welding Society. All welds shall be continuous around the entire perimeter. All welds shall be ground smooth. No tack welding and no field welding shall be permitted

7.50TLB.4. ALUMINUM SEAT FABRICATION. The sand cast aluminum is to be cast strictly following the fabrication guidelines presented in ASTM B26/B26M.

7.50TLB.5 INSTALLATION: Structural frames of benches shall be uniquely fabricated and pre-assembled before being installed in their final location in the work. Aluminum seats shall be uniquely fabricated before being installed. The aluminum seats with position separators may be pre-assembled onto the structural frame, or installed at the final location in the work.

Fully assembled leaning bars shall be installed in their final position and properly secured in place, as indicated on the prototype plans. The leaning bar assembly shall be anchor bolted into a solid concrete sidewalk base, with embedment as indicated on plans.

(A) DELIVERY, STORAGE, AND HANDLING. Deliver materials to site in manufacturer's original, unopened containers and packaging, with labels clearly identifying product name and manufacturer. Protect installed product to ensure that, except for normal weathering, leaning bar assemblies will be without damage or deterioration at time of Substantial Completion. All material shall be bundled and fully supported during shipping and storage to prevent creep. Keep materials in manufacturer's original, unopened containers and packaging until installation.

Any damage or excessively scratched will be rejected and replaced with new. All material must be straight and true when placed in the construction.

(B) TOUCHUP AND REPAIR: For all clean welds, bolted connections, and aluminum seats, the touch-up shall be in conformance with manufacturer's recommendations. Provide touch-up such that the repair is not visible from a distance of six feet (6'). The touch up color shall match the color of the material being repaired. Material manufacturer's directions for storage and use shall be adhered to. Material surfaces shall be protected during shipment so as to arrive mar and scratch free in the field.

7.50TLB.6. SUBMITTALS.

(A) SHOP DRAWINGS: The Contractor shall submit shop drawings in accordance with the requirements of the General Conditions of the Standard Highway Specifications.

(B) FOUNDRY CERTIFICATES: The Contractor shall furnish certificates from the foundry certifying the stainless steel and aluminum used in leaning bar fabrication meets the above standards.

(C) WARRANTY: The manufacturer guarantees a standard warranty. Products will be free from defects in material and/or workmanship for a period of three years from the date of invoice. The warranty does not apply to damage resulting from accident, alteration, misuse, tampering, negligence, or abuse. Product, at the option of manufacturer, shall be repair, replace, or refund the purchase price of any items found defective upon inspection by an authorized service representative. Purchasers should be aware that normal use of these high quality products can result in superficial damage affecting the finish. Scratches, nicks, and dents are to be considered normal wear and tear, and are not the responsibility of the manufacturer.

7.50TLB.7. MEASUREMENT. The quantity to be measured for payment shall be the number of complete DOT Leaning Bars installed at the site to the satisfaction of the Engineer.

7.50TLB.8. PRICE TO COVER. The price bid shall be a unit price per each **DOT LEANING BAR** and shall include the cost of all labor, materials, insurance, plant, equipment, and

incidentals necessary to furnish and install complete DOT Leaning Bars including, but not limited to, all finishes, hardware, anchors, and the furnishing of a complete prototype sample, all in accordance with the Contract Drawings, the specifications and the directions of the Engineer.

Excavation and concrete foundation will be paid for separately under their respective Contract Items.

Payment will be made under:

Item No.	Item	Pay Unit
7.50 TLB	DOT LEANING BAR	EACH

SECTION 7.54 R
Removal and Resetting of Existing Tree Grates and Frames

7.54R.1. Intent. This section describes the Removal of Existing Tree Grates and Frames and Tree Guards; and, the Resetting of Existing Tree Grates and Frames and Tree Guards.

7.54R.2. Description. Under this section, the Contractor shall provide all labor, material, equipment, insurance, and incidentals required to remove existing tree grates and frames and tree guards, and reset removed tree grates and frames and tree guards, when and where directed by the Engineer.

7.54R.3. Methods.

A) Removal of Existing Tree Grates and Frames, and Tree Guards. The Contractor shall carefully remove existing tree grates and frames and tree guards. The location of existing tree grates and frames, and tree guards designated to be removed shall be as shown on the Contract Drawings, unless otherwise directed by the Engineer.

Care shall be taken while removing each tree grate and frame, and tree guards. Any materials designated by the Engineer to be salvaged shall be cleaned of adherent material and either stored at the site for resetting under Item 7.54 RS, delivered to the property owner, or delivered to a designated Department of Parks and Recreation storage yard located within the Borough. Any salvageable material that is damaged as a result of the Contractor's operations shall be repaired or replaced in kind to the satisfaction of the Engineer, at no additional cost to the City. The Contractor shall notify the foreman of the storage yard at least three (3) days in advance of such delivery. All other materials shall become the property of the Contractor and properly disposed of away from the site.

Work under this section shall be performed under the supervision of an International Society of Arboriculture certified arborist (to be paid for under Item 4.21). No machinery in excess of 1 ton in weight shall pass beneath the dripline of existing trees to remain, except on the vehicular side of existing curbline. To avoid damage to roots of existing trees to remain, only hand tools shall be used to remove tree guards and tree grates and excavate the tree grate frames.

All holes left by the removal operations shall be backfilled with the soils specified for the tree pit in the Contract Drawings and compacted in a manner approved by the Engineer.

B) Resetting of Existing Tree Grates and Frames, and Tree Guards. After existing tree grates and frames, and tree guards are removed under Item 7.54 R, those that are designated to be reset shall be cleaned and, as directed by the Engineer, prime painted in the field with a paint that is compatible with the finish paint. Then prior to installation, the grates and frames and tree guards

shall receive two (2) field coats of paint. The finish paint shall meet the requirements of Federal Specification TT-P-61 and shall be a black color as approved by the Engineer.

For tree grates and frames, the Contractor shall first set and secure in place the existing tree grate frames designated to be reset in the proposed new concrete sidewalk around existing or newly planted trees. After embedment in the new concrete sidewalk, a sand bed shall be installed within the tree pit as directed by the Engineer. The sand bed shall be leveled to the required elevation and the seat for the grate shall be cleaned of all debris which may interfere with the proper seating of the grate. Each grate shall be installed in two half sections and securely bolted together. Grates shall be set in flush with the top of the frames.

For existing tree guards, the Contractor shall reset them where directed in accordance with the requirements for installing new tree guards as specified in Section 7.49 A, herein this Addendum.

7.54R.4. Measurement.

A) The quantity of

Item No. 7.54 R - REMOVAL OF EXISTING TREE GRATES AND FRAMES

to be measured for payment shall be the number of existing tree grates (each tree grate shall be defined as consisting of 2-half grate sections) with frames and the number of tree guards (each tree guard shall be defined as consisting of 3 or 4 guard sections) that are actually removed to the satisfaction of the Engineer.

B) The quantity of

Item No. 7.54 RS - RESETTING OF EXISTING TREE GRATES AND FRAMES

to be measured for payment shall be the number of existing tree grates (each tree grate shall be defined as consisting of 2-half grate sections) with frames or the number of existing tree guards (each tree guard shall be defined as consisting of 3 or 4 guard sections) that are actually reset to the satisfaction of the Engineer.

7.54R.5. Price to Cover.

A) The contract price bid for

Item No. 7.54 R - REMOVAL OF EXISTING TREE GRATES AND FRAMES

shall be a unit price per each existing tree grate with frame removed or existing tree guard removed and shall cover the cost of all labor, material, equipment, insurance, and incidental expenses necessary to complete the work of removing an existing tree grate and frame or an existing tree guard, salvage it for resetting, delivering it to a

City storage yard or disposing of it when directed, and backfilling the area to grade; all in accordance with the Contract Drawings, the specifications and the directions of the Engineer.

B) The contract price bid for

Item No. 7.54 RS - RESETTING OF EXISTING TREE GRATES AND FRAMES

shall be a unit price for each reset tree grate with frame or tree guard and shall cover the cost of all labor, material, equipment, insurance, and incidental expenses necessary to complete the work, including, but not limited to, cleaning, painting and storing the tree gate and frame or tree guard for resetting, and furnishing and installing the sand bedding for the tree grate and frame; all in accordance with the Contract Drawings, the specifications and the directions of the Engineer.

Payment will be made under:

Item No.	Item	Pay Unit
7.54 R	REMOVAL OF EXISTING TREE GRATES AND FRAMES	EACH
7.54 RS	RESETTING OF EXISTING TREE GRATES AND FRAMES	EACH

SECTION 8.52 FP
STEEL FOUNDATION PLATE

8.52FP.01. INTENT. This section describes the furnishing and installation of the Steel Foundation Plate.

8.52FP.02. DESCRIPTION. The Steel Foundation Plate shall be embedded in the poured concrete footing to the nominal dimensions as indicated on the contract drawings and specifications.

8.52FP.03. MATERIAL. Steel Foundation Plates shall comply with the requirements of the NYC Department of Transportation (DOT) Standard Highway Specifications **Section 2.35, Structural Steel** and shall be galvanized in accordance with **Section 2.34, Galvanizing** of NYCDOT Standard Specifications.

8.52FP.04. SUBMITTALS. Shop drawings of each steel plate showing bolt locations shall be provided by the contractor in accordance with the requirements of **Subsection 1.06.13** of the NYCDOT Standard Highway Specifications, for review and approval prior to fabrication.

8.52FP.05. NOT USED

8.52FP.06. MEASUREMENT. Payment will be based on the computed weight of metal as shown on the approved shop drawings, and shall include, but not be limited to, permanent bolts and welds in the structure as erected.

Not to be included in the measurement is the weight of all erection materials including, but not limited to, bolts, pilot and driving nuts, temporary protective coatings, and all boxes, crates or other containers used for packing, together with sills, struts, and rods used for supporting members during transportation.

The weight of all required bolt heads, nuts and washers will be estimated, making no allowance for waste, and included in the weight for which payment will be made. The mass of all required welds will be estimated and included in the mass for which payment will be made.

8.52FP.07. PRICE TO COVER. The contract price per pound shall cover the cost of all
labor, materials, equipment, insurance, and incidentals required to furnish and install steel plates complete in place in full compliance with the contract drawings, the specifications and direction of the Engineer.

Payment will be made under:

Item No.	Item	Pay Unit
8.52 FP	STEEL FOUNDATION PLATE	LBS.

SECTION 8.52 PT
PAVING TRAY

8.52PT.01. INTENT. This section describes the furnishing of the ground level paving tray.

8.52PT.02. DESCRIPTION. Fabricated steel plate frame, angle and flat textured cover plate assembly, configured and to nominal dimensions as indicated on the contract drawings and specifications.

8.52PT.03. SUBMITTALS. All submittals shall be provided by the contractor in accordance with the requirements of **Subsection 1.06.13** of the NYCDOT Standard Highway Specifications.

A. Shop Drawings: Erection and fabrication drawings for all totem components and accessories. Show plans and elevations at not less than 1/4 inch to 1'-0" scale, and details at not less than 1-1/2 inch to 1'-0" scale.

B. Product Data: Manufacturer's printed specifications and installation instructions for each type of metal framing and accessory, including data required to show compliance with the Drawings and Specifications.

8.52PT.04. MATERIALS.

A. Steel plate & Side Brackets:

a. Material & Finish: Grade 304 Stainless Steel, Mill finish.

b. Thickness: 1/4"

c. Side Brackets: As required, to be agreed with the Engineer prior to fabrication

1. Edges: All edges to be polished and rounded off

2. Joints: Plate sections to be butt jointed

3. Installed level: To be aligned flush with poured concrete sidewalk

B. Cover Plate:

a. Material & Finish: Grade 304 Stainless Steel, Textured 'Durbar' plate.

b. Thickness: 1/4 "

c. Edges: All edges to be polished and rounded off

d. Finished installed level: To be aligned flush with poured concrete sidewalk

e. Mounting Screws:

1. Exposed To Sidewalk: To be stainless steel with tamper proof torx' head or approved equivalent

2. Beneath Sidewalk: To be stainless steel socket head

C. Temporary Cover Plate Mounting Brackets:

a. Material and Finish: Grade 304 Stainless Steel with mill finish

b. Nominal Thickness: As required by Contractor to safely support imposed sidewalk live loads

c. Bolt Fixings: To be stainless steel, sized and configured to support imposed sidewalk live loads

8.52PT.05. METHOD

A. Fabrication:

a. Plates cut and seam welded directly to each other

b. Side brackets spot welded directly to plates.

c. Provide all necessary Jigs for placement of paving trays relative to Totem foundation plates, provide a minimum of 6 jigs per Totem type.

8.52PT.06. MEASUREMENT. The quantity to be measured for payment shall be the number of new paving trays, of each size and type listed below, furnished and installed to the satisfaction of the Engineer.

Type	Item	Length	Width
A	Paving Tray (Pathway Totem)	1'-7 ¼"	8 ½"
B	Paving Tray (Area Totem)	2'-11 ¼"	8 ½"
C	Paving Tray (Neighborhood Totem)	4'-3 ¼"	8 ½"

8.52PT.07. PRICES TO COVER. The contract price bid for each size and type of paving trays shall be a unit price per each and shall cover the cost of all labor, materials, equipment, jigs, inspections, insurance, and incidentals necessary to complete the work of furnishing and installing each type of paving tray as shown on the contract drawings, as specified and as directed by the Engineer.

Payment will be made under:

Item No.	Item	Pay Unit
8.52 PT-A	PAVING TRAY (PATHWAY TOTEM)	EACH
8.52 PT-B	PAVING TRAY (AREA TOTEM)	EACH
8.52 PT-C	PAVING TRAY (NEIGHBOURHOOD TOTEM)	EACH

SECTION HW-914
ALLOWANCE FOR (WAYFINDING) TOTEMS

HW-914.1. DESCRIPTION. Under this item, the Contractor shall be required to pay to the TOTEM sign contractor for them to furnish and install new (WAYFINDING) TOTEMS.

HW-914.2. MATERIALS. (Not applicable)

HW-914.3. CONSTRUCTION DETAILS. (WAYFINDING) TOTEMS signs shall only be installed once the foundations have been installed by the Contractor under other contract items.

HW-914.4. METHOD OF MEASUREMENT. The fixed price lump sum shown in the Bid Schedule for this item shall be included in the total bid price; however, actual payment to the Contractor will be based on the actual invoices submitted by the TOTEM sign contractor to the Contractor for payment. The fixed sum is not to be altered in any manner by the bidder.

It is agreed that all work shall be based on the actual number of TOTEM SIGNS that are installed to the satisfaction of the Engineer.

HW-914.5. BASIS OF PAYMENT. The Contract price for this item shall be the total price for the work performed by the TOTEM sign contractor under this item. Payment shall be equal to the sum total of all vouches submitted to the Contractor by TOTEM sign contractor, as approved by the Engineer, for payments made by the Contractor to TOTEM sign contractor for the cost of furnishing and installing new (WAYFINDING) TOTEMS.

Payment under this item shall be made by the City on a reimbursement basis only, for payments made by the Contractor to the TOTEM sign contractor for providing the materials and services required to furnish and install TOTEM, as required. Said payments shall be equal the total amount of invoices submitted by the TOTEM sign contractor to the Contractor during the period for which a requisition is submitted. The Contactor shall be required to submit to the Engineer satisfactory evidence of payment to TOTEM sign contractor. No retainage will be withheld by the Department on such payments made under this section.

The total estimated cost of this item is the "fixed sum" amount shown for this item in the Bid Schedule. No guarantee is given that the actual lump sum cost for this item will in fact be the "fixed sum" amount. The "fixed sum" amount is included in the total bid solely to insure that sufficient monies will be available to pay the Contractor for the work performed under this item.

The Contractor shall maintain separate books of accounts and shall not charge any portion of the cost for furnishing and installing TOTEM SIGNS to another part of the work. Payment and partial payments under this item shall be treated separately from the rest of the contract items.

The voucher for payment shall be submitted to the Engineer on a monthly basis.

The "fixed sum" is for bidding purposes only and shall not be varied in the bid. The Contractor will be paid for the actual amount regardless of the fixed sum, which may be more or less than the fixed amount.

Payment will be made under:

Item No.	Item	Pay Unit
HW-914	ALLOWANCE FOR (WAYFINDING) TOTEMS	F.S.

SECTION PK-35
SHREDDED BARK MULCH
(NOT A PAY ITEM)

WORK.

Under this Item, the Contractor shall furnish and place SHREDDED BARK MULCH in accordance with the plans, specifications, and directions of the Engineer.

MATERIAL.

Shredded Bark Mulch shall be a natural forest product composed of shredded bark or wood not exceeding three inches (3") in length and one inch (1") in width. Mulch shall be derived from tree material, not from wood waste or by-products like sawdust, shredded palettes, or other debris. Mulch shall be natural in color and not dyed. It shall be of a uniform grade with no additives or any other treatment. Mulch with leaves, twigs, and/or debris shall not be acceptable. The pH factor should range from 5.8 to 6.2.

Commercial Fertilizer Low Phosphorus (Slow Release): shall have the following composition by weight: Nitrogen (N) shall be min. 7% - max. 10%, of which min. of 50% is slow-release; available Phosphorus (P) shall be min. 1% - max. 2%; and soluble Potash (K) shall be min. 4% - max. 12%.

Fertilizer shall be a *pesticide free* (no weed-and-feed) product such as "Healthy Turf (8-1-9)" as manufactured by Plant Health Care, Inc, Pittsburgh, PA; or Safer Ringer Lawn Restore (10-2-6) as manufactured by Woodstream Corp., Lifitz, PA; or Nutrients Plus (7-2-12) as manufactured by Nutrients Plus, Virginia Beach VA, or approved equivalent.

All Commercial Fertilizer Low Phosphorous (Slow Release) shall be delivered in standard size bags of the manufacturer, showing weight, analysis, and name of manufacturer. It shall be stored as directed by the Engineer in such a manner that its effectiveness will not be impaired.

METHOD.

Upon completion of planting and prior to application of shredded bark, Commercial Fertilizer Low Phosphorous (Slow Release) shall be incorporated into soil to a depth of three inches (3") at the rate of twenty pounds per thousand square feet. (20 lbs./1,000 s.f.)

Shredded bark mulch shall be applied to the surface of the beds and tree pit areas, as shown on the plans or Standard Details and as directed by the Engineer. Mulch shall be applied to a uniform depth of three to four inches (3"-4") over the tree pit and shrub bed areas and two to three inches (2"-3") over groundcover beds, and shall be so distributed as to create a smooth level cover over the exposed soil. Plants shall not be covered.

The cost of shredded bark mulch shall be deemed included in the price for the Item No. PK-473.

SECTION PK-473
Decompact Existing Tree

PK-473.1. DESCRIPTION: Under this Section the Contractor/Subcontractor's arborist shall DECOMPACT EXISTING TREE, in accordance with the plans, specifications, and as directed by the Engineer, in consultation with the Tree Consultant (Item 4.21) or their designated representative.
Note: DBH is defined as Diameter at Breast Height, which is 4'-6" above mean grade.

PK-473.2. GENERAL REQUIREMENTS:

(A) NOTIFICATION: Before any decompaction work can begin under this item, the Contractor must notify a minimum of 48 hours prior to beginning work both the Director of Forestry, **Manhattan,** at (212) 860-1845 and the Engineer.

All of the following information and instructions are subject to the approval and direction of the Engineer, in consultation with the Tree Consultant (Item 4.21).

(B) QUALIFICATIONS REQUIRED: The Contractor/subcontractor (arborist) perfoming the work shall meet the tree pruning qualifications specified in Subsection 4.18.3. of the Standard Highway Specifications.

PK-473.3. MATERIALS:

(A) Compost: shall contain organic matter, or material of generally humus nature capable of sustaining the growth of vegetation, with no admixture of refuse or material toxic to plant growth. The Compost shall be free of pathogens and stones, lumps, or similar objects larger than two inches (2") in greatest diameter, as well as roots, brush, and weeds.

Composts that have been derived from organic wastes such as food and agriculture residues, animal manures, and sewage sludge that meet the above requirements, and are approved by the New York State DEC, are acceptable compost sources. Compost shall have an approximate N-P-K analysis of at least 1-1-0 as delivered, with a pH between 5.5 and 8.0 and a solids content of at least fifty percent (50%). Compost shall have a minimum of twenty five (25%) to a maximum of fifty percent (50%) organic material.

Compost shall be from Long Island Compost, Islip, NY or "Nature's Choice Compost" by Nature's Choice Corp., Union, NJ; or Agresoil compost by Agresource, Inc. Amesbury, MA; or approved equivalent.

Organic biosolids are not acceptable. Compost available from NYC Department of Sanitation may be acceptable for purposes of this specification. See www.nyc.gov/sanitation or www.nyccompost.org for pick-up sites.

(B) Mulch: See NYC DOT Standard Highway Specification Section 4.16.4.C.

PK-473.4. METHOD:

(A) Where specified, existing trees to remain shall be decompacted after completion of construction operations including excavation, paving, pruning, and backfilling. Decompaction shall be performed utilizing one of the three methods listed below as shown on the contract tree mitigation plan or as determined by the Engineer, in consultation with the Tree Consultant (Item 4.21). All

tree root protection shall be removed prior to starting decompaction and decompaction shall not be performed in frozen ground conditions.

Using a pneumatic device, the area as determined by the Engineer, in consultation with the Tree Consultant (Item 4.21), and specified on the Tree Mitigation Plan, is to be tilled to a depth of 6 to 8-inches using a compressed air gun. Compost backfill shall be applied to the area at a depth of 1-inch and tilled into the soil using a compressed air gun. The area shall be top dressed with four (4") inches of shredded bark mulch (PK-35) and thoroughly watered (no separate payment).

Where a pneumatic device is required, work shall be performed with a device such as an Air-Spade® CGP System, as manufactured by Concept Engineering Group, Inc. Verona, PA, or approved equal. The Contractor shall provide a compressor unit for operating the pneumatic excavator rated at one hundred fifty standard cubic feet per minute (150 scfm) at ninety pounds per square foot gauge (90 psfg). Different nozzles may be used on the air spade to expedite the work or minimize the amount of airborne material. Where a pneumatic device is used, care shall be taken to avoid rocks being scattered and inadvertently damaging private or public property. In addition, operators must be equipped with adequate protective clothing and gear, in accordance with manufacturer's recommendations. All tree roots exposed by the pneumatic or hand excavation operation must be kept constantly moist with burlap covered with white plastic and checked a minimum of two (2) times a day, once in the morning and once in the afternoon, for a maximum of forty-eight (48) hours, until backfill is complete as directed by the Engineer, in consultation with the Tree Consultant (Item 4.21), or his designated representative.

(B) Watering: Watering shall take place at one-week intervals for a period of three weeks following decompaction at a rate of 750 gallons of water per 1,000 square feet of decompacted area. The Engineer may order less watering based on weather conditions, resulting soil water content or other factors. If drought conditions warrant, the Engineer may order more frequent watering than scheduled or during non-scheduled periods. A watering schedule shall be submitted to the Engineer each week.

Watering for trees shall be conducted by dispersing water to plants individually. Water shall be delivered to each plant under low pressure through the end of an appropriate sized hose or watering wand, or soaker hose anchored by pins where appropriate. The rate of watering should allow maximum penetration of water into the soil and at a rate that does not displace mulch or soil, cause uprooting or exposure of plant root to the air or break saucers around plants that were created to hold water.

Water shall not be applied in a manner which damages plants, stakes or adjacent areas. Watering shall not cause uprooting or exposure of plant's roots to the air. Damages resulting from these operations shall be immediately repaired at the Contractor's expense.

Where water is supplied from City hydrants, the Contractor shall obtain a free hydrant permit from the Department of Environmental Protection. Permits are issued for a 30-day period, and the Contractor is responsible for keeping the permits current. The permits are available from each borough office. To obtain a permit, the Contractor should bring a copy of their DDC contract, indicating exemption from the permit fee, as described in NYC DOT Standard Highway Specifications under Division 1 Contract Requirements Section 1.06.23. (A) Permits, with a general description of the hydrant location (s) they propose to access.

PK-473.5. SUBMITTALS: All submittals shall be as specified in Subsection 4.18.3.(E) of the Standard Highway Specifications.

PK-473.6. PAYMENT SCHEDULE: The Contractor will be paid at the following rates for the different size groups of trees decompacted based on the bid price for decompacting a tree over six to twelve (6" – 12") inch DBH (base unit).

TREE DBH	TREE UNITS	PAYMENT PER TREE
Over 0" to 6"	0.75	75% of unit price bid
Over 6" to 12"	1.00 (base unit)	100% of unit price bid
Over 12" to 18"	1.25	125% of unit price bid
Over 18" to 24"	1.5	150% of unit price bid
Over 24" to 30"	2.0	200% of unit price bid
Over 30" to 36"	2.5	250% of unit price bid
Over 36" to 42"	3.0	300% of unit price bid
Over 42" to 48"	3.5	350% of unit price bid
Over 48"	4.0	400% of unit price bid

For example, decompaction of one thirty-one (31 ") inch DBH tree would receive payment for 2.5 tree units, decompaction of one twenty-two (22") inch DBH tree would receive payment for 1.5 tree units, and decompaction of one seven (7") inch DBH tree would receive payment for one tree unit, for a total payment of 5.0 tree units.

PK-473.7. MEASUREMENT: The quantity of DECOMPACT TREE OVER 6" TO 12" DBH to be paid for under this Item shall be the number of tree units decompacted, calculated in accordance with the payment schedule above, to the satisfaction of the Engineer.

PK-473.8. PRICE TO COVER: The price bid shall be a unit price for EACH tree decompacted in the OVER 6" to 12" DBH size group (equivalent to one tree unit) and shall include by the cost of all labor, materials, insurance, and equipment necessary for decompacting trees by air-tilling the critical root zone as directed and other incidental necessary to complete the work including, but not limited to, mulch, compost and watering; all in accordance with the plans, the specifications, and directions of the Engineer.

Where shown on the Tree Mitigation plan and/or Demolition plan, the Contractor shall protect existing tree roots with mulch and/or plywood, the cost of which shall be deemed included under all scheduled items. Where shown on the Tree Mitigation plan and/or Demolition plan, Preparatory Pruning and Preparatory Fertilizing, where required, which shall be paid separately under their respective items.

Payment will be made under:

Item No.	Item	Pay Unit
PK-473	DECOMPACT EXISTING TREE	EACH

SECTION GI-2.13
ENGINEERED SOIL
(NOT A PAY ITEM)

GI-2.13.1. INTENT

This section describes an engineered soil to be used as the planting medium for Infiltration Planting Pits. The Contractor shall furnish, amend (if required), place and prepare the Engineered Soil for plant material in accordance with specifications, Contract Drawings, and as directed by the Engineer.

GI- 2.13.2. KIND

Engineered soil shall conform to the following standards:

1. Recommended Soil Testing Procedures for The Northeastern United States, 3rd Edition, Northeast Regional Publication, Agricultural Experiment Station, University of Delaware. Bulletin #493, Revised October 2009 or latest.
2. USDA Soil Survey Laboratory Methods Manual, Soil Survey Investigations Report No. 42 Version 4.0 November 2004.

GI-2.13.3. SUBMITTALS

(A) Prior to the procurement and delivery of the Engineered Soil to the site, the material shall be tested. A representative of the Department shall be present when sample are taken from the proposed engineered soil source - frequency of testing is one for every 50 C.Y. delivered. The Contractor shall submit to the Engineer for review and approval the following for each source:

1. Proposed material source and vendor.
2. A sample of the proposed material, taken with a representative of the Department, indicating the method of sampling and location of the sample.
3. The Contractor shall submit to the Engineer the name and location of the borrow (source) or stockpile site(s) and the estimated quantity of material available. The Contractor shall provide a notarized letter from the owner(s) of the proposed borrow site and/or stockpile site(s) indicating ownership of the proposed site(s) and a commitment to supply a specified minimum quantity of material for this project. Additionally, the supplier shall provide a certificate of clean fill and/or source materials for topsoil, signed by a NYS licensed PE/RLA or RA. To avoid delays in planting, the Contractor shall immediately begin to secure and test Engineered Soil at least one month in advance of the material actually being needed on site. This will allow sufficient time to blend the specified soil mix and make all the necessary adjustments in the mixing process.
4. Results of the organic content analyses conducted in accordance with the above referenced standard, *Recommended Soil Testing Procedures for The Northeastern United States, 3rdEdition, Northeast Regional Publication, Agricultural Experiment Station, University of Delaware. Bulletin #493, Revised October 2009 or latest.*
5. Results of the USDA soil texture gradation (sand, silt and clay) analyses and sand sieve analyses, with full reporting of all information in USDA sieve sizes, in accordance with the *USDA Soil Survey Laboratory Methods Manual, Soil Survey Investigations Report No. 42 Version 4.0 November 2004.*
6. Results of the pH tests conducted in accordance with the above referenced standard, *USDA Soil Survey Laboratory Methods Manual, Soil Survey Investigations Report No. 42 Version 4.0 November 2004.*
7. Results of the soluble salts test conducted in accordance with the above referenced standard, *Recommended Soil Testing Procedures for The Northeastern United*
8. *States, 3rdEdition, Northeast Regional Publication, Agricultural Experiment Station, University of Delaware. Bulletin #493, Revised October 2009 or latest.*

9. Results of the Nutrient analyses test conducted in accordance with the above referenced standard, *Recommended Soil Testing Procedures for The Northeastern United States, 3rdEdition, Northeast Regional Publication, Agricultural Experiment Station, University of Delaware. Bulletin #493, Revised October 2009 or latest.*

10. Results of the Inorganic nitrogen and total Kjedahl nitrogen tests conducted in accordance with the above referenced standard, *USDA Soil Survey Laboratory Methods Manual, Soil Survey Investigations Report No. 42 Version 4.0 November 2004.*

11. Results of the acid-producing (iron sulfide) test conducted in accordance with the methodologies utilized by the *USDA Soil Survey Laboratory Methods Manual, Soil Survey Investigations Report No. 42 Version 4.0 November 2004.*

NOTE: Due to the agricultural nature of some of the Quality Control testing the Contractor is notified that both Rutgers University and Cornell University can perform nearly all agricultural testing required, one exception may be the acid-producing test. Turn around times for results may vary from standard soils testing. However, all agricultural testing procedures must be performed in accordance with the above referenced standards and the *USDA Soil Survey Laboratory Methods Manual (No. 42, November 2004)* and the *Recommended Soil Testing Procedures for The Northeastern United States, 3rd Edition, Northeast Regional Publication, Agricultural Experiment Station, University of Delaware. Bulletin #493, Revised October 2009 or latest.* If another lab is proposed, the Contractor can submit written certification from the proposed lab certifying that the lab will utilize the same methodologies for soil testing as outlined in these specifications.

(B) As delivery of Engineered Soil to the site progresses, the following additional testing shall be conducted by the Contractor on the Engineered Soil brought to the site. Frequency of testing is one for every 50 CY delivered. Results of tests shall be submitted to Engineer for review and approval.

1. Organic Content Testing in accordance with the *Recommended Soil Testing Procedures for The Northeastern United States, 3rdEdition, Northeast Regional Publication, Agricultural Experiment Station, University of Delaware. Bulletin #493, Revised October 2009 or latest*).

2. pH testing in accordance with *the USDA Soil Survey Laboratory Methods Manual, Soil Survey Investigations Report No. 42 Version 4.0, November 2004.*

3. Soluble Salts testing in accordance with the *Recommended Soil Testing Procedures for The Northeastern United States, 3rd Edition, Northeast Regional Publication, Agricultural Experiment Station, University of Delaware, Bulletin #493, Revised October 2009 or latest.*

4. Results of the Nutrient analyses test conducted in accordance with the *Recommended Soil Testing Procedures for The Northeastern United States, 3rd Edition, Northeast Regional Publication, Agricultural Experiment Station, University of Delaware, Bulletin #493, Revised October 2009 or latest.*

5. Results of the Inorganic nitrogen and total Kjeldahl nitrogen tests conducted in accordance with the *USDA Soil Survey Laboratory Methods Manual, Soil Survey Investigations Report No. 42 Version 4.0, November 2004.*

6. Results of the USDA soil texture gradation (sand, silt and clay) analyses and sand sieve analyses, with full reporting of all information in USDA sieve sizes, in accordance with the with *the USDA Soil Survey Laboratory Methods Manual, Soil Survey Investigations Report No. 42 Version 4.0, November 2004.*

7. Results of the acid-producing (iron sulfide) test conducted in accordance with the methodologies utilized by the *USDA Soil Survey Laboratory Methods Manual, Soil Survey Investigations Report No. 42 Version 4.0; November 2004.*

(C) The Contractor shall submit to Engineer the materials and procedures for amending the engineered soil, if appropriate. Amendment of soil is only permitted to meet the nutrient and organic requirements of the specifications. Nutrient modifications are only permitted through the use of the

approved contract specified organic fertilizer and the organic amendment permitted is leaf compost, no other organic amendment is permitted.

(D) The Contractor shall submit quantity records on a weekly basis to Engineer.

(E) Material failing the frequency testing shall not be incorporated into the work and shall be removed from the site at the Contractor's expense.

GI-2.13.4. CHEMICAL AND PHYSICAL REQUIREMENTS

(A) The *QC* requirements relative to Engineered Soil are detailed below. **The Contractor shall strictly comply with all requirements of its QA plan.** Sufficient lead time is required to develop an appropriate plan for mixing methodologies and ratios that will provide reliable results to meet the parameters listed below.

(B) Engineered Soil shall be a loamy sand (70-85% sand) as classified by the U.S. Department of Agriculture (USDA). Based on test results, a determination will be made to ensure that the sand fraction analysis results are capable of supporting proposed vegetation. Engineered Soil shall be free of refuse, hard clods, woody vegetation, stiff clay, construction debris (of any kind), boulders, stones larger than 1-1/2 inches, chemicals, or other deleterious material toxic to any vegetation used on this project.

(C) Engineered Soil shall have a minimum organic content of 3.0 percent and a maximum of 6.0 percent. If the source soil requires amendment to meet the Engineered Soil organic content requirement, leaf compost will be the only approved admixture. No soil mixing shall be permitted during or after Engineered Soil placement. Engineered Soil shall be tested for compliance with Contract specifications and submitted for approval prior to delivery to the site.

(D) The organic content of soils shall be determined by a laboratory using the loss on ignition method as described in the *Recommended Soil Testing Procedures for The Northeastern United States, 3rd Edition, Northeast Regional Publication, Agricultural Experiment Station, University of Delaware. Bulletin #493, Revised October 2009 or latest.*

(E) The gradation of Engineered Soil shall be determined by a laboratory using the methods of the *USDA Soil Survey Laboratory Methods Manual, Soil Survey Investigations Report No. 42 Version 4.0, November 2004.* The gradation of the Engineered Soil as determined by USDA classifications shall be within the following ranges:

Ranges:	0-08% gravel	
	70-85% sand	
	of which:	55-75% very coarse to medium sand
		10-25% fine to very fine sand
	10-15% silt	
	5- 15% clay	

Classification/sieve size:		
	2" to 2.0 mm	gravel
	2.0 mm to 0.05 mm	sand
	0.05 mm to 0.002 mm	silt
	<0.002 mm	clay

In addition to the above gradation the Contractor shall provide the percentage of particle sizes corresponding to U.S.D.A. classifications:

Very coarse sand (2.0 mm to 1.0 mm)

Coarse sand (1.0 to 0.5 mm)

Medium sand (0.5 mm to 0.25 mm)

Fine sand (0.25 to 0.1 mm)

Very fine sand (0.1 to 0.05 mm)

Silt (0.05 to 0.002 mm) Clay (<0.002 mm)

(F) The pH value of Engineered Soil shall be (5 - 7.0) as determined by an approved laboratory using soil pH (Water (1:1. V:V)) procedures as described in the *USDA Soil Survey Laboratory Methods Manual, Soil Survey Investigations Report No. 42 Version 4.0, November 2004.* Amendment of soil to lower pH to meet Contract requirements is not permitted.

(G) The soluble salt value of the Engineered Soil shall be (0-.4mmhos cm-1) as determined by an approved laboratory using the soluble salt (1:2(V:V)) procedures as described in the *Recommended Soil Testing Procedures for The Northeastern United States, 3rd Edition, Northeast Regional Publication, Agricultural Experiment Station, University of Delaware, Bulletin #493, Revised October 2009 or latest.*

(H) The value for Kjeldahl Nitrogen shall be as outlined below as determined by an approved laboratory using the *USDA Soil Survey Laboratory Methods Manual, Soil Survey Investigations Report No. 42 Version 4, November 2004.*

Kjeldahl N Acceptable range is 0.06% to 0.25% (with nitrate (NO-3) form of nitrogen not to exceed 20 ppm)

(I) The value for Macro (P, K) and Micro Nutrients (Mg, Ca, Mn, Zn, Cu and B) shall be as outlined below as determined by an approved laboratory using the procedures as described in the *Recommended Soil Testing Procedures for The Northeastern United States, 3rd Edition, Northeast Regional Publication, Agricultural Experiment Station, University of Delaware, Bulletin #493, Revised October 2009 or latest.*

P	Acceptable range is 80 lbs/acre to 100 lbs/acre
K	Acceptable range is 100 lbs/acre to 300 lbs/acre
Ca	Acceptable range is 900 lbs/acre to 2,800 lbs/acre
Mg	Acceptable range is 300 lbs/acre to 600 lbs/acre
K+Ca+Mg	not greater than 3,700 lbs/acre*
Mn	Acceptable range is 2 ppm to 20 ppm
B	Acceptable range is 0.8 ppm to 3 ppm
Cu	Acceptable range is 0.1 ppm to 4.0 ppm
Z	Acceptable range is 1 ppm to 12 ppm
% Organic	3.0% to 6% (loss on ignition)

(J) An acid-producing soil test is required to determine the potential for decreases in soil pH after oxidation. The pH value of the solution shall be greater than 4.5 as determined by the *USDA Soil Survey Laboratory Methods Manual, Soil Survey Investigations Report No. 42 Version 4.0, November 2004.*

(K) Engineered Soil shall not contain any traces of hydrocarbons, petroleum products, chemically prohibited substances or any other elements considered to be toxic to any vegetation used on this Project. The Engineered Soil shall not smell of petroleum or give off other unnatural or toxic odors. Regardless of prior acceptance of sample material should the Engineered Soil delivered to the site seem suspicious in any way; the Resident Engineer shall reject the material.

(L) SAND shall consist of sand, free of organic material, loam, debris, frozen soil or other deleterious material which may be compressible. The sand shall be of uniform quality, friable, free from hard clods, stiff clay, hard pan, partially disintegrated stone, stones, lime, cement, ashes, slag, concrete, tar residues, tarred paper, gasoline, motor oil, or other petroleum hydrocarbons, boards, brush, weeds, stalks, roots, sods, chips, sticks or any other undesirable material. Invasive, nonnative seed shall not be allowed in the clean sand material.

Clean sand should conform to the following gradation requirements:

U.S. Standard Sieve Size	Percent Passing by Weight
No. 8	100
No. 10	15-100
No. 40	0-70
No. 60	0-12

Uniformly graded sands, defined as having a uniformity coefficient (Cu = D60/D10) less than 6, are unacceptable.

Tests shall be required and shall serve as a representative analysis for every 200 cubic yards of material utilized.

Clean sand shall comply with the following requirements: No sand shall be delivered in a frozen or muddy condition.

1. Invasive, Nonnative Plant Species: Clean sand shall be free of invasive nonnative plant propagules or if present, sand shall be sterilized with documentation.

When clean sand otherwise complies with the requirements of the specifications but shows an organic matter deficiency of not more than one (1) percent, organic matter may be incorporated when and as permitted by the Engineer.

GI-2.13.5. CONSTRUCTION METHODS

(A) Prior to procurement of Engineered Soil and starting delivery of soil, all approvals for those items required in Subsection GI-2.13.3, above, entitled "SUBMITTALS" must have been given in writing to and accepted by the Engineer.

(B) Engineered Soil shall be evenly placed to the thickness and configuration as directed by the Engineer or as shown on the plans. Engineered Soil shall not be placed when the subgrade or Engineered Soil is frozen, excessively wet, extremely dry, or in a condition otherwise detrimental to the proposed seeding, planting or soil structure.

(C) The material delivered to the site shall be visually and continuously inspected by the Engineer during construction to ensure that it is consistently the same material previously approved and delivered to the site. If any foreign or off odors are detected, the Engineers reserves the right to refuse the material. If changes in material occur, soil delivery shall cease immediately, the Contractor shall not incorporate the new material into the work until the material meets these specifications. The Contractor shall test the new material as a new source and submit his results to the Engineer for his approval. If Engineer rejects the material, the Contractor shall immediately remove the material off the project site at no additional cost to the City. [See article "K" of Subsection GI-2.13.4., herein]

(D) Engineered Soil shall be placed by gravity with no additional compaction. After Engineered Soil placement and final grading, no heavy equipment, pickup trucks, or other construction vehicles shall be permitted to travel on these completed areas. The Contractor shall, through mechanical raking and hand grading with rakes and shovels, grade all areas around fences, pipes and other structures in preparation for seeding or planting.

(E) The Contractor shall, as part of the Engineered Soil spreading operation, mechanically rake and clean all undesirable materials from the Engineered Soil prior to planting operations.

(F) The Contractor shall dispose of all undesirable materials raked from the Engineered Soil, in accordance with the Specific Provisions.

(G) The Contractor shall pay all costs, fees, etc., to rectify any deficiencies in placement of the Engineered Soil layer to the acceptance of the Engineer.

(H) The cost of Engineered Soil shall be deemed included in the prices for the Item Nos. 4.16 BA510, 4.16 BA515, 4.16 BA520, and 4.16 BA525.

(NO TEXT ON THIS PAGE)

4. SPECIAL PROVISIONS

The following shall become a part of and apply to the Contract:

A. LINES AND GRADES. The Contractor shall furnish lines and grades in accordance with Section 1.06.27 of the Standard Highway Specifications, except that survey controls established for this project may no longer exist and the Contractor shall be required to re-establish the survey control information using official Borough Survey Control Monuments and Bench Marks, where they exist. The Contractor shall check with Topographic Section of the Borough President's Office as to the reliability and accuracy of the data to be used for lines and grades.

B. SPECIFIC TRAFFIC STIPULATIONS. Under this contract, the Contractor shall perform the work in strict accordance with the requirements of Section 6.70 in the Standard Highway Specifications, specific traffic stipulations as called for on the Contract Drawings, OCMC Traffic Stipulations attached to the end of these Special Provisions, and the directions of the Engineer. In case of a conflict, the Engineer's decision shall be final.

In addition, the cost of compliance with requirements of the OCMC Traffic Stipulations, unless otherwise provided for, shall be deemed included in the prices bid for all scheduled items.

C. HOLIDAY CONSTRUCTION EMBARGO. A special Holiday Construction Embargo shall be in effect on the Friday of the week preceding Thanksgiving Day week from 6:00 AM to 11:59 PM and again from the Monday of Thanksgiving Day week from 6:00 AM through January 2, at 11:59 PM. Roadway and sidewalk construction activities will be restricted during the embargo period on the streets listed below*.

Any permits issued prior to the date of this notice, for work during this embargo period on the streets listed below which do not already have the permit stipulation "410" are hereby suspended for the period noted above. All permittees must comply with this embargo unless a special waiver is granted by OCMC. Waiver requests must be filed at least thirteen days before Thanksgiving Day, in the Permit Office by filing a "Request for Roadway/Sidewalk Permits During Embargo Periods" and submitting supporting documentation. Waiver requests should only be submitted for critical reasons for a specific project. If a waiver is granted, the applicant will be notified so they can apply for the approved permits. Waivers **are not** required for ongoing Building Construction Activity Permits which already include

---

- **Please note that this embargo only applies to NYCDOT construction permits.**

* **List of street and maps of the affected locations are available by borough on the Department of Transportation's website at: http://www.nyc.gov/html/dot/html/motorist/trafalrt.shtml**

the "410" permit stipulation. Waiver request forms may be obtained at any Permit Office or on the Department of Transportation's website at: http://www.nyc.gov/html/dot/downloads/pdf/holidayembapp.pdf

Prior to this embargo period all necessary measures must be taken so that all roadways and sidewalks are in proper condition to allow for the expeditious and safe movement of vehicular, bicycle and pedestrian traffic. Tool carts, cable reels, containers, and material stored on roadways must be removed during the embargo period.

The opening of utility access covers is prohibited on any of the streets noted below between the hours of 6:00 AM and midnight unless the utility or Contractor files for an Emergency Authorization Number as required by section 2-07 of the Department of Transportation's Highway Rules. The planned opening of utility access covers may occur during the hours of 12:01 AM and 5:59 AM where no authorization number is required.

Temporary restoration of the streets and sidewalks and removal thereof, if required for the Holiday Embargo period, will be paid for under the appropriate scheduled items.

No extension of time due to the shutdown period will be granted to the Contractor for completion of the work.

D. DISPOSAL OF EXCESS EXCAVATED MATERIAL. All excess excavated material, with the exception of contaminated material, shall become the property of the Contractor and shall be properly disposed of away from the site, at the Contractor's expense. Contaminated material shall be disposed of separately in accordance with contract requirements.

E. CONTRACT ITEMS THAT INCLUDE BACKFILL AS A PART OF THEIR WORK. The following shall pertain to all contract items that have backfill as a part of their work: Backfilling shall comply with Subsection 4.11.3 of the Standard Specifications and no additional payment will be made for any Highway or Street Lighting work item requiring Contractor to furnish additional fill material to meet these requirements when backfilling.

F. N.Y.C. TRANSIT INSURANCE. The Contractor (Permittee) shall indemnify and save harmless the City of New York and the New York City Transit (Permittor) in accordance with the following "Insurance Requirements" and proof that the necessary insurance is in effect will be required before work can commence:

NYCT "OUTSIDE CONTRACT" INSURANCE REQUIREMENTS

1. The Permittee at its sole cost and expense shall carry or cause to carried and shall maintain at all times during the period of performance under this Agreement policies of insurance as herein below set forth below:

(a) Workers' Compensation Insurance (including Employer's Liability Insurance) with limits as specified in Schedule A, which limit may be met by a combination of primary and excess insurance meeting the statutory limits of New York State. The policy shall be endorsed to include Longshoreman's and Harbor Workers' Compensation Act/Maritime Coverage Endorsement and/or Jones Act Endorsement when applicable.

(b) Commercial General Liability Insurance (I.S.O. 2001 Form or equivalent) approved by Permittor in the Permittee's name with limits of liability as specified in Schedule A for each occurrence on a combined single limit basis for injuries to persons (including death) and damages to property. The limits may be provided in the form of a primary policy or combination of primary and umbrella/excess policy. When the minimum contract amounts can only be met when applying the umbrella/excess policy, the Umbrella/Excess Policy must follow form of the underlying policy and be extended to "drop down" to become primary in the event primary limits are reduced or aggregate limits are exhausted. Such insurance shall be primary and non-contributory to any other valid and collectable insurance and must be exhausted before implicating any Permittor/MTA policy available.

Such policy should be written on an occurrence form, and shall include:

- Contractual coverage for liability assumed by the Permittee under this agreement;
- Personal and Advertising Injury Coverage;
- Products-Completed Operations;
- Independent Contractors Coverage;
- "XCU" coverage (Explosion, Collapse, and Underground Hazards) where necessary;
- Contractual Liability Exclusion, applicable to construction or demolition operations to be performed within 50 feet of railroad tracks, must be voided, where necessary; and,
- Additional Insured Endorsement (I.S.O. Form CG 20 26 07/04 version or equivalent) approved by the Permittor naming:

  New York City Transit Authority (NYCTA), the Manhattan and Bronx Surface Transit Operating Authority (MaBSTOA), the Staten Island Rapid Transit Operating Authority (SlRTOA), MTA Capital Construction Co., the Metropolitan Transportation Authority (MTA) including its subsidiaries and affiliates, and the City of New York (as Owner).

(c) Business Automobile Liability Insurance Policy - (I.S.O. Form CA 00 01 10 01 or equivalent) approved by the Permittor is required if Permitee's vehicle enters Permittor property. The insurance must be in the name of the Permittee or its contractor entering the Permittor property with limits of liability in the amount specified in Schedule A for claims for bodily injuries (including death) to persons and for damage to property arising out of the ownership, maintenance or use of any owned, hired or non-owned motor vehicle.

(d) Railroad Protective Liability Insurance policy shall be required as specified in Schedule A.

(e) Environmental/Pollution Exposures

In the event environmental or pollution exposures exist, the Permittee shall require the environmental contractor or sub-contactor to provide the applicable insurance covering such exposure. The limits and type of insurance provided shall be satisfactory to the Permittor and will be confirmed to the parties prior to the start of the work.

2. General Requirements Applicable to Insurance Policies

a) All of the insurance required by this Article shall be with Companies licensed or authorized to do business in the State of New York with an A.M. Best Company rating of not less than A-/VI1 or better and reasonably approved by the *Permittor/MTA and shall deliver evidence of such policies*.

b) Except for Workers Compensation, all references to forms and **coverages** referred to above shall be the most recent used by the Insurance Services Office, Inc. ("ISO") or equivalent forms approved by the Insurance Department of the State of New York, provided, however, that excess coverages may be written on forms reasonably acceptable to Permittor containing provisions other than those contained in ISO forms but otherwise conforming in substance to the requirements of this Article.

c) The Permittee or its Contractor performing the work shall furnish evidence of all policies before any work is started to the permittor:

For NYCT Contract Inspection
C/O Mr. John Malvasio, P.E.
Assistant Chief Engineer
Department of Maintenance of Way
NYC Transit
130 Livingston Street, Room 8044
Brooklyn, NY 11201
Telephone: (718) 694-1358

These policies must: (i) be written in accordance with the requirements of the paragraphs above, as applicable; (ii) be endorsed in form acceptable to include a provision that the policy will not be canceled, materially changed, or not renewed, unless otherwise indicated herein, at least thirty (30) days prior written notice to the Permittor c/o MTA Risk and Insurance Management (MTA RIM) Department - Standards, Enforcement & Claims Unit, 2 Broadway - 21st floor, New York, NY 10004; and (iii) state or be endorsed to provide that the coverage afforded under the contractor's policies shall apply on a primary and not on an excess or contributing basis with any policies which may be available to the Permttor/MTA, and also that the contractor's policies, primary and excess, must be exhausted before implicating any Permittor/MTA policy available. (iv) In addition, contractor's policies shall state or be endorsed to provide that, if a subcontractor's policy contains any provision that may adversely affect whether contractor's policies are primary and must be exhausted before implicating any Permittor/MTA policy available, contractor's and subcontractor's policies shall nevertheless be primary and must be exhausted before implicating any Permittor/MTA policy available. Except for Professional Liability, policies written on claims made basis are not acceptable. At least two (2) weeks prior to the expiration of the policies, contractor shall endeavor to provide evidence of renewal or replacement policies of insurance, with terms and limits no less favorable than the expiring policies. Except as otherwise indicated in the detailed coverage paragraphs below, self insured retentions and policy deductibles shall not exceed $100,000, unless such increased deductable or retention is approved by Permittor/MTA. The Permittee shall be responsible for all claim expense and loss payments within the deductible or self-insured retention. The insurance monetary limits required herein may be met through the combined use of the insured's primary and umbrella/excess policies.

d) Certificates of Insurance may be supplied as evidence of policies of the above policies, except for Policy (D) Railroad Protective Liability Insurance Policy. However, if requested by the Permittor, the Permittee shall deliver to the Authority, within forty-five (45) days of be request, a copy of such policies, certified by the insurance carrier as being true and complete. The Railroad Protective Liability Insurance Policy must be provided in the form of the Original Policy. A detailed Insurance Binder may be provided, ACORD or Manuscript Form, pending issuance of the Original Policy. The Original Policy must be submitted to MTA RIM within 30 days of the Binder Approval.

e) If a Certificate of Insurance is submitted, it must: (1) be provided on the Permittor Certificate of Insurance Form or MTA Certificate of Insurance Form for Joint Agency Agreements; (2) be signed by an authorized representative of the insurance

carrier or producer and notarized; (3) disclose any deductible, self-insured retention, sub-limit, aggregate limit or any exclusions to the policy that materially change the coverage; (4) indicate the Additional Insureds and Named Insureds as required herein, along with a physical copy of the Additional Insured Endorsement (I.S.O. Form CG 20 26 07/04 version or equivalent), as applicable and the endorsement(s) must include policy number(s); (5) reference the Contract by number on the face of the certificate; and (6) expressly reference the inclusion of all required endorsements.

f) The minimum amounts of insurance required in the detail description of policies (A), (B), (C), and (D) above shall not be construed to limit the extent of the Permittee's liability under this Agreement.

g) If, at any time during the period of this Agreement, insurance as required is not in effect, or proof thereof is not provided to the Permittor, the Permittor shall have the options to: (i) direct the Permittee to suspend work or operation with no additional cost or extension of time due on account thereof; or (ii) treat such failure as an Event of Default.

G. METRO-NORTH RAILROAD (MNRR) FACILITIES REQUIREMENTS.

The Contractor shall be required to comply with the METRO-NORTH RAILROAD CONSTRUCTION MANAGEMENT SPECIFICATIONS FOR INDIVIDUALS & COMPANIES (I & C) WORKING ON OR ADJACENT RAILROAD PROPERTY, Section A & B (Revised 6/10/09), that are attached to the end of these Special Provisions, with the following modifications and additions:

1. The work "sponsor" used throughout these specifications shall mean the City, its employees, its agents, consultants, contractors, sub-contractors, etc.

2. Metro-North Railroad may allow the excavation at the intersection of East 86th Street and Park Avenue, for water main installation and signal conduits replacement, to be performed at night between the hours of 2:30AM and 5:00AM.

3. The cost of providing Metro-North's Protective Personnel shall be paid for directly by the City to Metro-North, at no cost to the Contractor. However, payment for any additional penalty costs incurred by Metro-North due to late notification, or other infractions deemed caused by the Contractor, shall be borne by the Contractor.

4. All technical submittals by the Contractor to Metro-North Railroad shall first be submitted to the Resident Engineer for his review and approval. Upon approval, submittals will then be forwarded to Metro-North Railroad by the Resident Engineer.

5. When excavating Park Avenue at East 86th Street intersection for water main installation and signal conduits replacements, a protective scaffolding will not be required provided the tracks directly below are deactivated and Metro-North's roof structure is not expected to be damaged as a result of the Contractor's operations. The Contractor is not permitted to disturb Metro-North's structures or it's waterproofing. Should any damage to Metro-North's structure be caused as a result of the Contractor's operation they shall be repaired or replaced, to the satisfaction of the Engineer in consultation with Metro-North's, at no cost to the City.

6. The Contractor will not be permitted to operate cranes, heavy equipment, or vibratory equipment in the vicinity of Metro-North Railroad facilities, as directed by the Engineer. The breaking of pavement, curb and sidewalk for removal over Metro-North Structures shall be accomplished by using hand-held pneumatic or hydraulic tools only. Truck mounted pavement breaking equipment will not be permitted.

H. METRO NORTH RAILROAD (MNRR) INSURANCE.

SECTION C

UNIFORM INSURANCE STANDARDS CONSTRUCTION WORK INVOLVING CONTRACTORS NOT WORKING FOR METRO-NORTH COMMUTER RAILROAD COMPANY

The Contractor shall procure, at its sole cost and expense, and shall maintain in force at all times during the term of this Agreement, except for products and completed operations coverage, which must be maintained for at least three years following completion of the contract, policies of insurance as herein below set forth, written by companies with an A.M. Best Company rating of A-/"VII" or better, and approved by the Metro-North Railroad/MTA and shall deliver evidence of such policies. These policies must: (i) be written in accordance with the requirements of the paragraphs below, as applicable; (ii) be endorsed in form acceptable to include a provision that the policy will not be canceled, materially changed, or not renewed without at least thirty (30) days prior written notice to the Metro-North Railroad c/o MTA Risk and Insurance Management Department - Standards, Enforcement & Claims Unit, 2 Broadway - 21st floor, New York, NY 10004 by Certified Mail, return receipt requested; and (iii) state or be endorsed to provide that the coverage afforded under the contractor's policies shall apply on a primary and not on an excess or contributing basis with any policies which may be available to the Metro-North Railroad/MTA, and also that the contractor's policies, primary and excess, must be exhausted before implicating any Metro-North Railroad/MTA policy available. (iv) In addition, contractor's policies shall state or be endorsed to provide that, if a subcontractor's policy contains any provision that may adversely affect whether contractor's policies are primary and must be exhausted before implicating any Metro-North Railroad/MTA policy available,

contractor's and subcontractor's policies shall nevertheless be primary and must be exhausted before implicating any Metro-North Railroad/MTA policy available. Except as otherwise provided herein, policies written on a "claims-made" basis are not acceptable. At least two (2) weeks prior to the expiration of the policies, contractor shall endeavor to provide evidence of renewal or replacement policies of insurance, with terms and limits no less favorable than the expiring policies. If any deductible or retention is applicable, such deductible and/or retention shall not exceed $100,000 unless such increased deductible or retention is approved by Metro-North Railroad/MTA. The Contractor shall be responsible for all claim expense and loss payments within the deductible or self-insured retention. The insurance monetary limits required herein may be met through the combined use of the insured's primary and umbrella/excess policies.

Workers' compensation Insurance (including Employer's Liability Insurance with limits of not less than $2,000,000.00) meeting the statutory limits of New York State. Such insurance shall fully comply with the Worker's Compensation law(s) of the state(s) in which operations or work related to this project is to be performed.

Commercial General Liability Insurance (I.S.O. 2001 Form or equivalent approved by Metro-North Railroad in the Contractor's name with limits of liability as specified in Schedule A for each occurrence on a combined single limit basis for injuries to persons (including death) and damage to property. Such policy should be written on an occurrence form and shall include:

- Contractual coverage for liability assumed by the Contractor;
- Personal and Advertising Injury Coverage
- Products-Completed Operations;
- Independent Contractors Coverage;
- "XCU" coverage (Explosion, Collapse, and Underground Hazards) where necessary;
- Contractual Liability Exclusion, applicable to construction or demolition operations to be performed within 50 feet of railroad tracks, must be voided, where necessary;
- Coverage for claims for bodily injury asserted by an employee of an additional insured and any Employer Liability Exclusion which may otherwise operate to exclude such coverage shall be voided in this respect; and
- Additional Insured Endorsement (I.S.O. Form CG 20 10 1185 version or equivalent approved by the Metro-North Railroad) naming the following entities and their subsidiaries and affiliates as follows:

All Contracts:

Metro-North Commuter Railroad & Metropolitan Transportation Authority

Contracts involving Grand Central Terminal:

Midtown TDR Ventures, LLC, Midtown Trackage Ventures, LLC & Connecticut Department of Transportation

Contracts involving the Hudson Line:
Midtown TDR Ventures, LLC, Midtown Trackage Ventures, LLC, Connecticut Department of Transportation, National Railroad Passenger Corporation (Amtrak), Consolidated Rail Corporation, CSX Transportation, Inc. & New York Central Lines LLC, and Delaware & Hudson Railway Company, Inc.

Contracts involving the Harlem Line:
Midtown TDR Ventures, LLC, Midtown Trackage Ventures, LLC, Connecticut Department of Transportation, Consolidated Rail Corporation, and CSX Transportation, Inc. & New York Central Lines LLC.

Contracts involving the West of Hudson Lines:
(including Port Jervis Line, Pascack Valley Line, and Piermont Branch) New Jersey Transit Rail Operations, Inc., Consolidated Rail Corporation, and CSX Transportation, Inc. & New York Central Lines LLC., and Norfolk Southern Railway & Pennsylvania Lines LLC.

Railroad Protective Liability Insurance (ISO-RIMA or equivalent form approved by the Railroad), covering the work to be performed at the designated job site and affording protection for damages arising out of bodily injuries or death, injury to or destruction of property, including damage to the insureds own property and conforming to the following:

- The limit of liability shall be as specified in Schedule A. If the policy is subject to an aggregate limit, replacement insurance will be required if it is likely such aggregate will be exceeded.

- Evidence of Railroad Protective Liability Insurance must be provided in the form of the Original Policy or a detailed Binder pending issuance of the Original Policy.

- Depending on the territory where the Work is to be performed, the following additional entities must be included as named insureds on the Railroad Protective Liability Insurance Policy:

All Contracts:
Metro-North Commuter Railroad & Metropolitan Transportation Authority

Contracts involving Grand Central Terminal:
Midtown TDR Ventures, LLC, Midtown Trackage Ventures, LLC & Connecticut Department of Transportation

Contracts involving the Hudson Line:
Midtown TDR Ventures, LLC, Midtown Trackage Ventures, LLC, Connecticut Department of Transportation, National Railroad Passenger Corporation (Amtrak), Consolidated Rail Corporation, CSX Transportation, Inc. & New York Central Lines LLC, and Delaware & Hudson Railway Company, Inc.

Contracts involving the Harlem Line:

Midtown TDR Ventures, LLC, Midtown Trackage Ventures, LLC, Connecticut Department of Transportation, Consolidated Rail Corporation, and CSX Transportation, Inc. & New York Central Lines LLC.

Contracts involving the West of Hudson Lines:

(including Port Jervis Line, Pascack Valley Line, and Piermont Branch) New Jersey Transit Rail Operations, Inc., Consolidated Rail Corporation, and CSX Transportation, Inc. & New York Central Lines LLC., and Norfolk Southern Railway & Pennsylvania Lines LLC

Business Automobile Liability Insurance Policy (I.S.O. Form CA 00 01 07 97 or equivalent approved by the Railroad) in the Contractor's name with limits of liability as specified in Schedule A for claims for bodily injuries (including death) to persons and for damage to property arising out of the ownership, maintenance or use of any owned, hired or non-owned motor vehicle. The policy shall be extended to include employees of any insured acting in the scope of their employment.

Environmental Liability Requirements (required ONLY when environmental exposures are part of the work).

A. *Contractor's Pollution Liability* - In the case of a contract involving environmentally regulated substances or hazardous material exposure(s), the Contractor shall provide Contractor's Pollution Liability Insurance with respect to the work and activities of the Contractor or its Subcontractors, including but not limited to handling, transporting or disposing of any Hazardous Substances and/or environmentally regulated materials and any sudden and/or non-sudden pollution or impairment of the environment, including clean-up costs and defense. This insurance shall name the following entities as additional insured's: Metro-North Railroad and the Metropolitan Transportation Authority (MTA) including its subsidiaries and affiliates under this policy (or policies) and shall have limits of liability of not less than $5 million. The Contractor shall comply with all federal, state, and/or local laws, rules and regulations and shall obtain any additional coverages required by federal, state, or local government agencies. The Contractor's Pollution Liability Insurance shall be in effect from the time Metro-North Railroad permits the work relating to the Hazardous Substances or other environmentally regulated substances and materials to begin through the completion of the work.

   i. This insurance may be supplied by the Subcontractor performing the Work, if the Contractor is not performing any of the relevant work and provided the Contractor and Metro-North Railroad/the Metropolitan Transportation Authority including its subsidiaries and affiliates are listed as *"additional insureds."*

ii. The Contractor or its Sub-contractor performing the Work, shall obtain all permits, licenses and other forms or documentation, which are required and forward them to the Project Engineer. The insurance shall be submitted to MTA Risk and Insurance Management Department pursuant to requirements referenced in the Insurance Article.

iii. In the event that the Contractor or its Subcontractors transports from the Site hazardous substances or any other environmentally regulated substance that requires a governmentally regulated manifest, the CA 9948 and the MCS-90 Endorsements shall be attached to the auto liability policy and furnished on a primary basis with limits of liability of not less than $5,000,000 providing coverage for bodily injury or property damage including liability for environmental restoration resulting from negligence in the operation, maintenance or use of any motor vehicle involved in the transportation of Hazardous Substances or any other environmentally regulated substance as required pursuant to any federal, state or local laws, rules and regulations. A copy of each endorsement CA9948 and MCS-90 shall be submitted for review as part of the insurance submission.

iv. If coverage is not provided with a stand alone policy, a letter signed by an authorized agent is required, a sample copy of which is provided.

v. Any additional insurance policies necessary to obtain required permits or otherwise comply with applicable law, ordinances or regulations regarding the performance of the work.

B. **Pollution Legal Liability (Non-Owned Disposal Site Liability) Insurance.** If the project activities include the disposal of waste or other hazardous substance from the work site, the Contractor shall maintain or cause to be maintained this insurance. The Contractor must provide a certificate of insurance to Metro-North Railroad listing the disposal facility as an insured location. Metro-North Railroad and Metropolitan Transportation Authority are to be named as additional insureds on these policies with limits of liability of not less than FIVE MILLION DOLLARS ($5,000,000) per occurrence.

If coverage is not provided under a stand alone policy, the "Non-Owned Disposal Site endorsement must be referenced on the insurance certificate and a copy thereof submitted with the insurance.

Metro-North may, at its discretion, procure, provide and thereafter maintain in effect during the life of this project for and in behalf of Metro-North any and all force account insurance deemed necessary by Metro-North. The provision of such insurance shall not be deemed a limitation on any liability of sponsor arising under the terms of the

Entry Permit. The premium paid by Metro-North for sponsor in accordance with the provisions of the Entry Permit shall reimburse such force account insurance coverage.

Any notice to be served on Metro-North pursuant to this SECTION C - UNIFORM INSURANCE STANDARDS shall be delivered by hand against a receipt or by U.S. Certified Mail, Return Receipt Requested, postage pre-paid, addressed as follows:

MTA Risk & Insurance Management/Metro-North Railroad
2 Broadway, 21st Floor
New York, NY 10004

The Contractor shall furnish evidence of all policies before any work is started to the Metro-North Railroad c/o MTA Risk & Insurance Management - Standards Enforcement & Claims Unit. Certificates of Insurance may be supplied as evidence of policies of all policies, except the Railroad Protective Liability Policy. **The Railroad Protective Liability Insurance Policy** must be provided in the form of the **Original Policy**. A detailed Insurance Binder may be provided **ACORD** or **Manuscript Form**, pending issuance of the Original Policy. **The Original Policy must be submitted to MTA RIM within 30 days of the Binder Approval.**

The Agency reserves the right to request evidence of all other policies. If requested by the Agency, the Contractor shall deliver to the Agency within forty-five (45) days of the request a copy of such policies, certified by the insurance carrier as being true and complete. If a Certificate of Insurance is submitted it must: (1) be provided on the Metro-North Railroad Certificate of Insurance Form; (2) be signed by an authorized representative of the insurance carrier or producer and notarized; (3) disclose any deductible, self-insured retention, aggregate limit or any exclusions to the policy that materially change the coverage; (4) indicate the Additional Insureds and Named Insureds as required herein; (5) reference the Contract by number on the face of the certificate; and (6) expressly reference the inclusion of all required endorsements.

If, at any time during the period of this Contract insurance as required is not in effect, or proof thereof is not provided to the Metro-North Railroad, the Metro-North Railroad shall have the options to: (i) direct the Contractor to suspend work with no additional cost or extension of time due on account thereof; or (ii) treat such failure as an Event of Default.

I. METRO-NORTH RAILROAD GENERAL PROCEDURE AND SPECIFICATIONS. For "BASIC INSURANCE GUIDELINES FOR METRO NORTH RAILROAD (MNRR) ENTRY PERMITS" and "CONSTRUCTION MANAGEMENT SPECIFICATIONS FOR INDIVIDUALS & COMPANIES (I & C) WORKING ON OR ADJACENT RAILROAD PROPERTY", see requirements attached to the end of these Special Provisions.

J. SCHEDULE OF WORK. The Contractor shall be required to prepare a progress schedule, in accordance with the requirements of Article 9

of the Standard Construction Contract, based on simultaneously working at multiple locations using multiple crews during the construction of the contract, as approved by the Engineer.

Each work force crew shall be defined as a sufficient number of workers with support staff and equipment necessary to perform the work efficiently as directed by the Engineer. Where the Contractor can demonstrate to the Engineer that he has substantially completed work, he may be permitted to start work at additional locations, on a one to one basis, at the sole discretion of the Engineer.

Where the Contractor's work operations are not able to meet its approved progress schedule, the Engineer may order the Contractor to provide additional work force as may be necessary. Failure to comply with such orders within seven (7) calendar days after the written notice from the Engineer may result in the Contractor being declared in default of the Contract in accordance with the procedure contained in Article 48 of the Standard Construction Contract.

K. SCHEDULING PRESENTATION. The Contractor shall submit construction schedule in the form of a bar chart using "Microsoft Project 2010", or in an approved equivalent program which shall be directly and fully translatable into Microsoft Project 2010 format, within seven days of the initial Pre-Construction Meeting. Each bar in the chart shall show dates the Contractor plans to start and complete each construction activity after the initial Pre-Construction Meeting. Bar chart shall show the order and interdependence of all activities necessary to complete the work and the sequence in which activity is to be accomplished as planned by the Contractor and in accordance with all subcontractors or suppliers whose work shall be shown on the bar chart. The Contractor shall submit the bar chart for the Engineer's review and revise it, if required, until approved by the Engineer.

The Contractor shall submit weekly progress status update reports or as otherwise directed by the Engineer. The Contractor shall submit updated bar chart every month. The revised bar chart shall be made in the same form and detail as the original submittal and shall be accompanied by an explanation of the reasons for the revisions all of which shall be subject to approval by the Engineer.

L. ACCELERATED PROJECT SCHEDULE AND COMBINATION OF STAGES. Contractor shall plan and/or stage it work schedule using all hours/days available. Contractor is advised that all applicable unit prices shall include, for the purpose of this contract, all overtime costs, premium time costs, shift differentials required to complete construction within the specified "Time(s) of Completion" stipulated in this contract.

Contractor shall be permitted to accelerate this project, to combine stages and/or work sequences. Any such changes shall be shown in the construction schedule, to be furnished in accordance with the General Provisions of the Standard Specifications and the above

"SCHEDULING PRESENTATION" Article, and shall be submitted for approval of the Engineer.

M. NO EXTENSION OF TIME FOR WINTER SHUT-DOWN. Where the Contractor's approved work schedule for installing sidewalk, curb, roadway base and/or pavement falls within the winter period of December 1st through April 1st, the Contractor will NOT be granted an extension of time for completion of this contract due to the winter shut-down period, unless otherwise provided in Schedule A.

N. PRIVATE UTILITY HARDWARE ADJUSTMENTS will be performed by the owning utility company or its agent, at its expense. The Contractor shall notify the utility company 72 hours prior to start of work at each location where its hardware requires adjustment.

O. SURVEY MONUMENTS. When working in the vicinity of survey monument the Contractor shall hand excavate per Item 8.02 A and 8.02 B at City Survey Monuments, for a distance of five (5) feet around each monument, as directed by the Engineer.

P. RESTORATION OF ADJACENT AREAS. The Contractor shall be required to remove all form work. In planting strip areas, the Contractor shall be required to restore areas damaged as a result of his operations, to the satisfaction of the Engineer, with sod. The Contractor shall also, as directed by the Engineer, make safe adjacent areas to his work, such as: restoring missing or damaged pavement markings that were removed or damaged as a result of the Contractor's operations (as per requirements of Section 6.44 in the Standard Specifications); resetting granite blocks in tree pits; and, applying asphaltic concrete mixture (Item 4.02 CB) where badly broken sidewalk or curb may create a dangerous condition just outside his area of operation, where and when directed by the Engineer.

All restoration work shall be done to the satisfaction of the Engineer.

Q. THE CONTRACTOR IS NOTIFIED THE CONTRACTOR IS NOTIFIED that for use of City water under this project the Contractor shall be required to obtain all necessary permits from the Department of Environmental Protection, at no cost to the Contractor in accordance with the NYC Department of Environmental Protection, STANDARD SEWER AND WATER MAIN SPECIFICATIONS, dated July 1, 2014, Section 12.04 "TEMPORARY USE OF CITY WATER ON CONSTRUCTION PROJECTS."

R. THE CONTRACTOR IS NOTIFIED that the fuel cost per gallon used in the formula under Sub-Article 26.2.8 of the Standard Construction Contract for **Extra Work** will be derived from the fuel price index for the United States East Coast published weekly by the United States Energy Information Administration ("USEIA"), and available on its website at http://www.eia.gov/petroleum/gasdiesel/. The USEIA-published cost per gallon for the applicable fuel on the East Coast for the week in which the first day of each calendar quarter during the contract term occurs (i.e., January 1st, April 1st, July 1st and

September 1st) will be used in the reimbursement formula for all **Extra Work** invoiced that was performed during that calendar quarter. Should the USEIA stop publishing this fuel price index, the fuel cost per gallon will be determined by reference to a substitute index to be agreed upon by the Contractor and the City.

S. THE CONTRACTOR IS NOTIFIED that wherever the Item No. "6.52" and words "flagger" and "flagperson" are used in the Contract Documents and Drawings it shall mean the Item No. "6.52 FED" and the words "UNIFORMED FLAGPERSON".

T. START OF CONTRACT WORK. The Contractor is notified that a Notice To Proceed (NTP) date will be issued for work to commence within 21 to 30 Days of Contract Registration.

U.. PRICES TO INCLUDE. No direct payment will be made for costs incurred in complying with the foregoing Special Provisions, unless otherwise provided. Said costs will be deemed to have been included in the prices bid for all the scheduled contract items.

Metro-North Railroad

BASIC INSURANCE GUIDELINES FOR METRO NORTH RAILROAD (MNRR) ENTRY PERMITS

Policies must be written by Carriers rated A-/VII or better to be acceptable to MNRR

Read your agreement for specific insurance requirements.

In order to expedite the approval process, we recommend that you forward the insurance section from your agreement to your insurance representative for review and compliance of the coverages required. MTA Risk & Insurance Management must approve insurance prior to commencement of work.

1. **Metro North Agency Form must be used** to provide evidence of insurance. The Certificate Must Include:
   - Agreement or Entry Permit Number;
   - Any deductible, self-insured retention, sub-limit or aggregate limit;
   - Insured's telephone number, contact person and e-mail address;
   - Notarized signature of an Authorized Representative of the Insurance Carrier or Producer.
   - The appropriate checked (✓) boxes for the Additional Insureds as applicable.

2. **Minimum Coverage: Refer to Your Agreement for Specific Insurance Requirements:**

A. Workers' Compensation:
- NY State Insurance Fund form is acceptable;
- If a company is domiciled in a state other than New York, coverage must be extended to include New York State;
- If your company is exempt from Workers' Compensation, supporting documentation from NYS or your company's accountant and or attorney is acceptable.

B. General Liability:
- Contractor's policies (and its subcontractor's policies, if applicable) shall apply on a primary and not on an excess or contributing basis with any policies which may be available to the MNRR and must be exhausted before implicating any MNRR policy available. Any Umbrella/Excess Policy used to meet minimum contract requirements must follow form of the underlying policy and be extended to "drop down" to become primary in the event the primary policy is exhausted. **Provide *a physical copy of the Additional Insured Endorsement (I.S.O. Form CG 20 26 07 04 version or equivalent. Endorsement (s) must include policy number(s)*** - Additional Insureds for your work location are listed in the table below.

C. Business Automobile Liability
- Required if your vehicle enters Metro North property. The policy shall be extended to include employees of any insured acting in the scope of their employment.

D. Railroad Protective Liability (RRPL) An Original Policy is required. A detailed Insurance Binder (ACORD or Manuscript) will be accepted pending issuance of the Original Policy, which must be provided within 30 days of the Binder Approval. Named Insureds for your work location are listed in the table below

Do Not Submit Evidence of RRPL on a Certificate of Insurance.

Binder must be provided for the RRPL to be replaced by a complete policy within 30 days:

The Binder Must Include:

- Agreement or Entry Permit Number;
- Contractor Name and Address with contact information;
- List of Named Insureds (refer to table of Named Insureds);
- Description and Location of Project;
- Signature of an Authorized Representative of the Insurance Carrier or Producer.

Metro-North Railroad

CONSTRUCTION MANAGEMENT SPECIFICATIONS FOR INDIVIDUALS & COMPANIES (I & C) WORKING ON OR ADJACENT RAILROAD PROPERTY

Section A & B (Revised 6/10/09)

SECTION A

SPONSOR REQUIREMENTS FOR WORK AFFECTING THE RAILROAD

Introduction:
Metro-North is a commuter Railroad serving New York and Connecticut areas North of Manhattan. Construction and Maintenance activities shall not interfere with the safe and scheduled movement or operation of the trains. No construction activities will occur during Operating hours unless allowed by the Field Inspector. There are conditions unique to this operating railroad environment which Metro-North must consider when planning construction activities. Among these are: high voltage third rail and power transmission systems, high speed and silent trains that require long braking distances, buried signal control and communication systems and many more. Metro-North must have absolute cooperation of any sponsor planning construction activities that could interfere with train operations.
The sponsor is the agency or party who has a formal agreement with Metro-North to perform construction or maintenance around the railroad. The sponsor of the project is ultimately responsible for assuring that its agents, consultants, contractors and sub-contractors fully comply with the specifications contained herein. The term "sponsor" used throughout these specifications shall mean the sponsor, its employees, its agents, consultants, contractors, sub-contractors, etc.
The sponsor shall safeguard the tracks, rolling stock and other equipment and plant of the Railroad from being damaged in any manner and will be held financially responsible for it. He shall not perform any activities around the Railroad until he has executed a formal agreement and complied with Metro-North requirements.

Fouling:
An operating track will be considered fouled when, in the sole opinion of Metro-North, demolition, blasting or construction activity on or adjacent to a main track or controlled siding may interfere with the safe movement of trains at normal speed. A crane, derrick or a similar piece of equipment located on Metro-North right-of-way or on adjacent property shall be considered as fouling the track when the position in which it is working is such that without regard to the manner in which it is intended to carry out the operation, failure or malfunction could cause damage or obstruction within the operating area. Similarly, Metro-North utilities (power, communications and signal lines) will be considered fouled when, in the sole opinion of Metro-North, the sponsor's operation could damage or interfere with these utility lines.

Track Use:
Metro-North will, at its sole discretion, remove tracks from service and de-activate high voltage traction power facilities to permit certain construction activities that can only be performed at times when Metro-North can schedule this track use. **In general, Metro-North can de-activate single tracks at night between the hours of 2:30AM and 5:00AM**. Construction activities that require de-activating all tracks of a main line system must be performed on weekend nights at times specified by Metro-North. Requests for additional "track use" will be evaluated subject to operating and maintenance priorities. Requests to de-activate track(s) and/or high voltage power systems must be received in writing, faxed to 212 340 2573 and acknowledged by phone to the assigned Metro-North Inspector no less than 14 days prior to the scheduled activity. Metro-

North will only consider requests for "track time" to facilitate construction activities that have been approved by the Construction Management I & C Department.

Protective Personnel:
Metro-North will furnish flagmen, inspectors, maintenance personnel and similar labor (protective personnel) as required by Metro-North to protect the operation of train traffic during the sponsor's construction activities. The sponsor must obey the instructions from Metro-North flagmen or other representatives on the job site promptly. Failure to follow instructions from Metro-North personnel on the site will lead to withdrawal of Metro-North's entry permit, thus closing the job site to the sponsor and its employees. Metro-North will, at its sole discretion, determine the need for and the availability of protective support personnel. The sponsor must notify in writing, faxed to 212 340 2573 and acknowledged by phone to the assigned Metro-North inspector no less than 14 calendar days in advance of undertaking an approved construction activity that may require protective personnel. If the sponsor notifies Metro-North less than 14 days in advance, Metro-North may be unable to supply protective personnel and/or Metro-North may incur additional costs in accordance with existing collective bargaining agreements in order to fulfill a request. The cost of protective personnel and any additional penalty costs incurred by Metro-North due to late notification shall be borne by the sponsor. Requests to cancel construction activities and protective personnel must be received and acknowledged by the assigned Metro-North inspector no less than 96 hours (4 days) prior to the start of the scheduled construction activity. Any costs incurred by Metro-North due to late cancellation notice shall be borne by the sponsor.
Metro-North will provide protective forces to the extent possible considering operational and maintenance priorities. Metro-North makes no guarantee that protective personnel will be available to meet the sponsor's preferred schedule. Further, no such work may actually commence until the assigned Metro-North representative affirmatively advises the sponsor that the necessary protective forces are stationed and that he may proceed.

MNR Representation:
All matters requiring Metro-North approval or coordination of construction activities shall be directed to the following:

Assistant Director – Construction Management – I&C Department
Metro-North Commuter Railroad Company
420 Lexington Avenue, 11th Floor
New York, NY 10017.
212 499 4462 0r 212 499 4460
Lafond@mnr.org or Ramkeesoon@mnr.org

Preparation:
The sponsor shall obtain written approval of design and construction methods from Metro-North. The sponsor shall submit detailed plans, appurtenant data and calculations prepared by a Professional Engineer licensed in the state where the work will be performed for any operation on or adjacent to Metro-North property prior to the start of work. Metro-North will evaluate the effect of this work on the operating Railroad. The plan shall locate and identify all utilities above and below ground at the work site. The sponsor shall make necessary plan revisions, schedule changes, additions, deletions, etc., at his/her own expense. The sponsor shall remove at his/her own expense any pipe, wire or structural facility installed without Metro-North approval or which deviates from the plan approved by Metro-North.

Under the direction of a Metro-North representative (engineer, inspector) the sponsor shall – at no cost to Metro-North – perform pre and post construction surveys of tracks and structures to establish existing horizontal and vertical clearances. Vertical clearance shall be measured from "top of rail". Horizontal clearance shall be measured from the "centerline of track". The elevations shall reference an established survey benchmark that will remain undisturbed throughout the construction. It may be necessary for the sponsor to monitor movements of tracks and structures on a more frequent basis – monthly, weekly or daily as determined by the Metro-North representative. Copies of the field notes must be delivered to Metro-North on the date the survey was performed.

The sponsor shall obtain appropriate soils/foundation data prepared by a licensed Professional Engineer. The licensed Professional must perform an analysis and supply recommendations wherever the project requires excavations, shoring, pipe jacking, borings, dewatering and temporary foundation supports, or any other subsurface construction activities.

Under the direction of a Metro-North representative (engineer, inspector) the sponsor shall – at no cost to Metro-North – take pre and post construction photographs of the entire work site and track area, two sets of which will be delivered to Metro-North. The photographs shall be gloss prints 8 ins. by 10 ins. in size or submitted on disc with photos in jpg format. They shall also be labeled on their reverse sides. The label shall include project title, Project Identification Number (PIN), Bridge Identification Number (BIN) or contract number, name of sponsor, date and direction photograph was taken. Each photograph shall also be numbered for identification.

Submittals:

All submittals requiring review and approval by Metro-North shall first be reviewed by the sponsor's designated Consulting Engineer and then submitted to Metro-North to complete the review and approval process. Submittals shall be stamped or written as "Approved", "Approved As Noted", "Revise and Resubmit", or "Rejected" by the sponsor's designated consulting engineer at the conclusion of the review prior to its submission to Metro-North.

Environmental Controls:

The sponsor shall comply with any and all Federal, State and Local laws, regulations and rules governing environmentally controlled substances and construction practices. He shall submit a plan and procedure prepared by a Professional Engineer licensed in the state where the work will be performed for handling and disposal of regulated materials. De-watering operations shall comply with applicable regulatory controls and shall be subject to Metro-North review and approval. The sponsor shall comply with Federal and State regulations for containment, storage and disposal of hazardous/industrial wastes. He shall comply with Metro-North Procedure 50-601, Item "O", Environmental Controls. The sponsor shall indemnify and hold harmless Metro-North from any loss, liability or expense on account of claims which result from the handling, transportation, disposal or abatement of asbestos, asbestos-containing material or asbestos-contaminated materials, lead paint materials, polychlorinatedbiphenols (PCB's) and other environmentally regulated substances and materials in the possession of sponsor or his subcontractors.

Drainage/Wetlands/Storm Water Protection:

Metro-North is a non-traditional Municipal Separate Storm Sewer System (MS4). The sponsor must submit a Storm Water Pollution Prevention Plan (SWP3) for their project if it will result in the disturbance of surface areas and/or the creation of new impervious surfaces. The SWP3 must include temporary sedimentation and erosion control measures (both a narrative description of

the measures and a site diagram), as well as appropriate post-construction storm water protection measures (narrative description and design drawing) if the project will result in any new impervious area. The sponsor will be responsible for inspection and maintenance of sedimentation and erosion control measures during construction, and responsible for payment to

Metro-North for any ongoing maintenance required for post-construction storm water protection measures.

The sponsor will be responsible for identifying and delineating any and all wetlands in the area covered by the Entry Permit and/or in any area which could be impacted by the sponsor's project. The sponsor will be responsible for obtaining any permits required solely in their name as permittee. The sponsor shall promptly provide Metro-North with copies of all identification/delineation documents and reports as well as permit applications and permits in both draft and final form.

The sponsor shall indemnify and hold harmless Metro-North from any loss, liability or expense on account of claims that result from a failure to implement or maintain adequate storm water protection measures or a failure to obtain or comply with necessary regulatory permits.
Contractor must protect ballast and keep free from soil, concrete, slurry and other contaminants. Contractor must supply a method for the protection of the ballast. The Contractor/Sponsor is financially responsible for the replacement of contaminated ballast. The replacement of the ballast is performed by Metro-North's Track & Structures Department.

Security:
The sponsor shall adhere to Metro-North security practices. He shall identify all sponsor/subcontractor personnel who have reason to enter a designated security area of Metro-North property. He shall supply a listing of the names of all personnel who have reason to enter Metro-North property. The list shall be updated on a daily basis.
When working in Grand Central Terminal (GCT) the Sponsor shall submit a list of all the personnel working at the site to the Stations Master's Office (SMO) at the beginning of the shift. The list must include work location, date and work period. At the end of every work shift the competent person on site must notify the SMO that work has ended and everyone has left the work site.

Safety:
Metro-North conducts a mandatory safety orientation class for all sponsor personnel who enter upon or works adjacent to Metro-North's property. Seven (7) working days advance notice is necessary for class scheduling. Sponsor personnel must present proof of completion of this orientation before entering the property. Sponsor personnel who fail to carry proof of training shall be removed from the property.
The sponsor shall comply with the requirements of all applicable Federal, State, Local and Metro-North jurisdictions to provide a suitable work environment for workmen and for the general public. Sponsor shall prepare and submit a comprehensive Safety Plan which will: Designate a company Representative(s) who will prepare and implement a program of compliance. The Sponsor must supply personal protective equipment for all workmen employed by the sponsor or his contractors and enforce use of this equipment by contract personnel.
The sponsor shall supply Material Safety Data sheets for construction or maintenance materials that poses a safety, fire, health or other hazard to Metro-North.

Protective Enclosures:
The sponsor will not store materials or equipment upon the Railroad right-of-way without first obtaining written permission and approval of Metro-North. The sponsor shall secure construction materials and equipment that could be used by vandals to obstruct Railroad

operations in a vandal-proof enclosure. The sponsor shall be responsible to protect the work site with fences, barricades, barriers, watchmen or other means necessary to bar access to operating areas via the work site. Fences at a minimum shall be 12-gauge chain link, eight (8) feet in height. Vehicular barriers shall comply with "AASHTO" Standard for design and fastening to structures.

English Language:
The sponsor must furnish an English-speaking supervisor at each job location who is capable of communicating (including translating if necessary) instructions from the flagman or other Metro-North representative to the sponsor's personnel on the job. Such supervisor must remain on the site at all times while work is being performed or any sponsor employees are on or about the Metro-North right-of-way.

Blasting:
Is prohibited on Metro-North's property. Metro-North shall determine if any blasting in the vicinity of the railroad will affect its operations. The sponsor shall submit to Metro-North for approval, plans and specifications of any proposed controlled blasting activities that could affect railroad operations.

Hi-Rail Equipment:
Highway-rail mounted equipment and "work trains" are generally prohibited from use by non-Railroad agencies on Metro-North mainline tracks.

Temporary Structures:
Shall be necessary at the sole discretion of Metro-North to protect the Railroad or the general public from possible falling debris, paint or other materials, to protect personnel working above the right-of-way, to provide a platform for personnel, materials, and/or equipment and to provide a walkway for the general public. Temporary structures intended as walkways for the general public shall comply with the "New York State Building Code" Specifications and the Americans with Disabilities Act of 1991.
Temporary Stairways or pedestrian walkways must be fully enclosed to protect from precipitation.
A protective scaffold intended to contain finely broken concrete decking shall be designed for a live load of 200 lbs. per square foot applied uniformly over the entire structure, and a 2 kip concentrated load placed anywhere on the structure. The two loads are not to be applied simultaneously for design purposes. Design of the scaffold intended for any other purpose shall be submitted to Metro-North for approval. The design shall contain details of any construction activities supported or protected by the scaffold. Impact loads or rigging that exceed the capacity of the scaffold shall be subject to the conditions of Section B "Rigging". Wood for protective scaffolding must be fire-retardant. The sponsor must supply Metro-North with certification from the manufacturer or supplier that lumber meets or exceeds the ASTM E-84 fire-retardant specification for exterior application 30-minute duration. Plans and calculations for temporary

structures must be submitted to Metro-North for review and approval prior to construction. Further, plans and calculations must be prepared and stamped by a Professional Engineer licensed in the state in which the project is located.

Shoring:

All drawings for temporary sheeting and shoring shall be prepared and stamped by a Registered Professional Engineer (licensed in the state in which the project is located) and shall be accompanied by complete design computations with supporting soils and groundwater information when submitted for approval.
Sheeting shall be required on all excavations where the side of the excavation is intercepted by the Railroad live load influence line. The live load influence line is defined as a line originating at the top of tie and extending out in this plane a distance of 10 feet, then downward at a slope of 1 (vertical) on 1½ (horizontal). Such excavations must be designed to withstand, in addition to all static loads such as structural dead load, soil pressure and hydrostatic pressure, a Railroad live load of Cooper E-80 as defined in the "AREMA Manual Section 1-3" or other loading magnitude as may be directed by Metro-North. (See drawing "SK - 1", APPENDIX A).
Interlocking steel sheet piling, driven prior to excavation, must be used to protect track stability. The use of trench boxes or similar devices is not acceptable in this area. Soldier piling and lagging will be considered for supporting adjacent track(s) only when its use is approved by Metro-North. Consideration for use of soldier piling and lagging will be made if the required penetration of steel sheet piling cannot be obtained and when dry, non-running, stable material will be encountered.
Lateral forces acting on the sheeting shall be computed as follows:
The active earth pressure due to the weight of the soil shall be computed by the Rankine Theory. The Boussinesq analysis shall be used to determine the lateral pressure caused by the railroad loading. The load on the track shall be taken as a strip load with a width equal to the length of the ties (8' - 6"). The vertical surcharge, q (psf), caused by each axle weight divided by the tie length and the axle spacing (5' - 0"). For an E-80 loading:

$q = 80{,}000 \text{ lbs.} / (8.5' \times 5') = 1882 \text{ psf.}$

The horizontal pressure due to the live load surcharge at any point on the sheet piling wall is Ph and can be calculated by the following:

$$Ph = (2q / \pi) (\beta - \sin \beta \cos 2\alpha)$$

(See drawing "SK - 2", APPENDIX B).

The allowable stresses for the sheet piling and other steel members (wales, struts, etc.) shall be in accordance with AREMA Chapter 15, Parts 1 and 2. These allowable stresses may be increased ten percent (10%) due to the temporary nature of the installations.
Where soil or rock anchors are used, all anchors must be tested. Testing shall be in accordance with industry standards with ten percent (10%) of the anchors "Performance Tested" and all others "Proof tested".
Cavities adjacent to the sheet piling, created by the driving of the sheet piling, shall be filled with 1½-inch stone ballast. Any disturbed ballast must be restored and tamped immediately. This task

is performed by Metro-North's Track & Structures department the cost of which is borne by the sponsor.
Sheet piling shall be cut off at the top of tie during construction. After construction and backfilling has been completed, piling shall be cut off eighteen (18) inches below the existing ground line and left in place.
Moreover, sheeting alongside active track systems shall maintain lateral support. Lateral support shall maintain a compacted stone ballast shoulder level with the top of tie for at least two (2) feet

from the end of tie supported by a slope no steeper than one (1) vertical to two (2) horizontal.
Any excavation adjacent to track shall be covered and ramped and provided with barricades as required by Metro-North. A lighted walkway with a handrail must be provided adjacent to the track for any excavation within twenty (20) feet of the centerline.
Under the direction of a Metro-North representative (Engineer or Inspector) the sponsor shall – at no cost to the railroad- perform pre and post construction surveys of tracks and structures to establish existing horizontal and vertical clearances. Vertical clearances shall be measured from Top of Rail. Horizontal clearances shall be measured from the Center Line of Track. The elevations shall reference an established benchmark that will remain undisturbed throughout the construction. It may be necessary for the sponsor to monitor movements of tracks and structures on a more frequent basis – daily or weekly, monthly or as determined by the Metro-North Representative. Copies of the filed notes must be delivered to Metro-north on the date the survey was performed.
Final backfilling of the excavation shall be as required by Metro-North

SECTION B

REQUIREMENT FOR ERECTION, DEMOLITION, AND OTHER RIGGING OPERATIONS OVER OR ADJACENT TO METRO-NORTH RIGHT-OF-WAY

The sponsor must furnish scaled plans with supporting calculations in order to obtain written approval prior to the start of any rigging operation over or adjacent to the Metro-North right-of-way. Submittals for bridge erection, demolition, or other hoisting operations shall be prepared and stamped by a Registered Professional Engineer and must include the following:

1. Plan view showing locations of crane or cranes, operating radii, with delivery and disposal locations.

2. Crane rating sheets showing cranes to be adequate for 150% of the lift. Indicate Crane and boom nomenclature.

3. Plans and computations showing weight of picks. Include catalog with weight of equipment to be lifted and manufacturer's shipping weights.

4. Show in a table format on the plan a "Crane Lifting Schedule" of each crane pick as shown below:

CRANE LIFTING SCHEDULE								
Piece No.	Piece Weight kips	Rigging Weight kips	Block Weight kips	Maximum Weight kips	Maximum Radius feet	Boom Length feet	Crane Capacity kips	Safety Factor 150 %
1	X	X	X	X	Y	Y	X	Z

5. Computations and plans demonstrating that MNR's train shed structure can bear load of crane with equipment load.

6. Computations and plans demonstrating that soils or foundations for equipment and temporary structures are adequate and able to protect subsurface utilities and structures.

7. Check condition of steel in trainshed (Grand Central Terminal) to ascertain whether steel needs to l blocked or posted.

8. Plans and calculations showing locations and structural adequacy of mats, barges, embankments, supporting structures, planking, or special decking as required by Metro-North.

9. Location profiles indicating the proposed swing in relation to obstructions such as overhead wires and structures.

10. Data sheet listing type and size of slings or other connecting equipment. Include copies of catalog cuts or information sheets of specialized equipment. The method of attachment must be detailed on the erection plan. All lifting components must be adequate for 150% of the lift.

11. A complete procedure indicating the order of lifts and any repositioning or re-hitching of the crane or cranes.

12. Plans detailing temporary support of any components or intermediate stages.

13. A time schedule (by hour and day) of the various stages, as well as a schedule for the entire lifting procedure.

14. Written statement from crane owner of last crane safety inspection with a copy of current inspection certificate.

15. Mark the exact crane location in the field at least two working days prior to the intended operation. Also, certify the stability of the foundation for crane outriggers and supports.

16. Conduct survey/mark out of streets or yards (North of 97th street) to determine whether manholes or duct banks can bear outrigger loads.

In general, unless otherwise directed by Metro-North, operations directly over or adjacent to the operating right-of-way which foul the operating area, or which in the event of a failure could fall across the operating
area will be performed between approximately 2:30 AM and 5:00 AM.

Operations involving a track and power outage across all tracks may be performed at times specified by Metro-North.

Any deviation from this plan must be reviewed and approved by the sponsor's engineer prior to resubmission
to the Metro-North Engineer for review and approval prior to the date that the work will be scheduled.

APPENDIX A

DWG. SK - 1
(2/18/00)

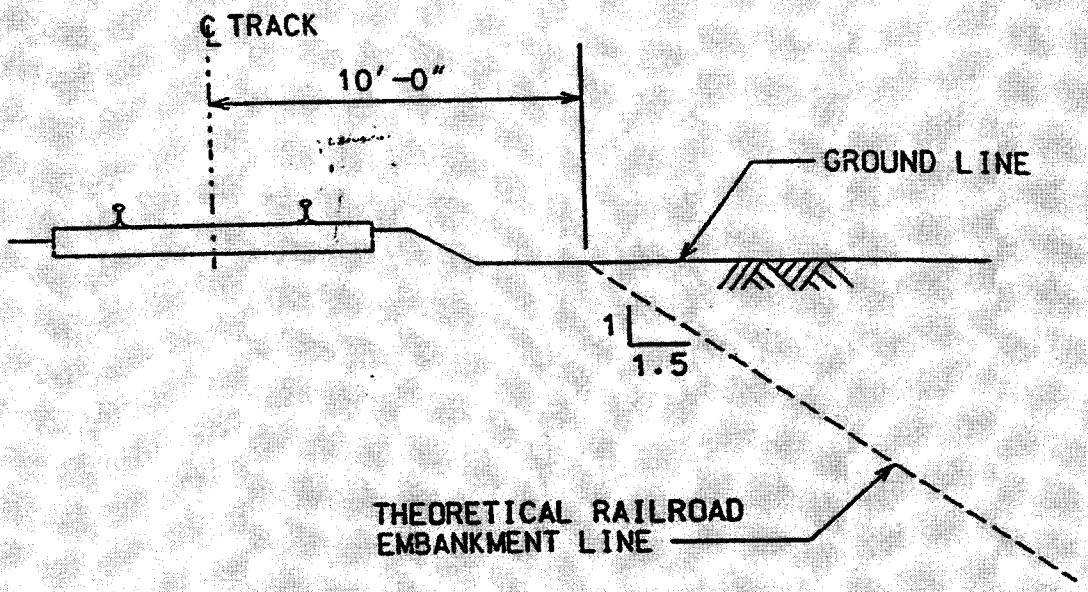

REQUIREMENTS FOR TEMPORARY SHEET PILING ADJACENT TO TRACK

1. STEEL SHEET PILING FOR TRACK SUPPORT IS NOT REQUIRED FOR EXCAVATION OUTSIDE THE THEORETICAL RAILROAD EMBANKMENT LINE. SHORING IN ACCORDANCE WITH OSHA REQUIREMENTS SHALL BE USED IN THIS AREA.

2. STEEL SHEET PILING, DRIVEN PRIOR TO EXCAVATION, IS REQUIRED WHEN EXCAVATION IS WITHIN THE THEORETICAL RAILROAD EMBANKMENT LINE.

3. ALL SHEET PILING IS TO BE DESIGNED FOR AN E-80 LOADING THE BOUSSINESQ ANALYSIS IS TO BE USED TO DETERMINE THE LATERAL PRESSURE CAUSED BY THE RAILROAD LOADING.

APPENDIX B

DWG. SK - 2
(2/18/00)

LATERAL PRESSURE DIAGRAM

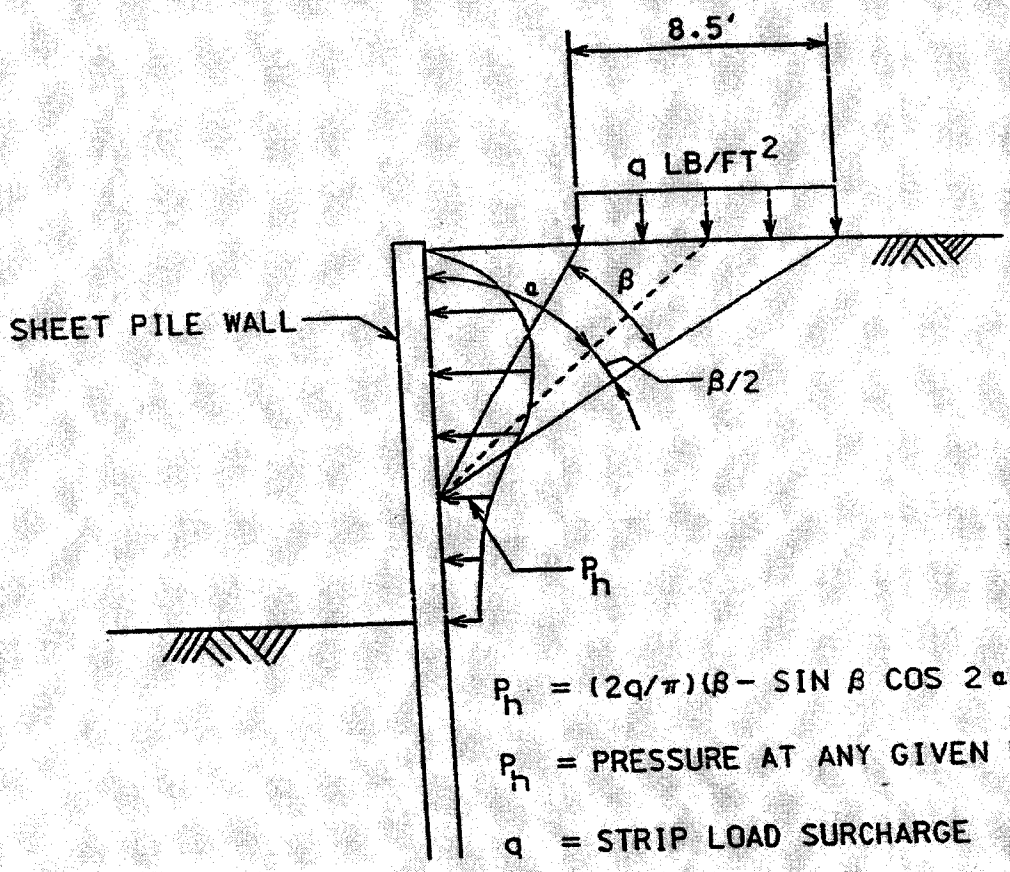

$P_h = (2q/\pi)(\beta - \sin\beta \cos 2\alpha)$

P_h = PRESSURE AT ANY GIVEN POINT

q = STRIP LOAD SURCHARGE

α = ANGLE IN DEGREES

β = ANGLE IN RADIANS

LATERAL PRESSURE DUE TO STRIP LOAD

NEW YORK CITY DOT Department of Transportation

POLLY TROTTENBERG, Commissioner

OCMC TRAFFIC STIPULATIONS

November 19, 2014

OCMC FILE NO: MEC-13-493
CONTRACT NO: HWMM008
PROJECT: EAST 86TH ST. STREETSCAPE IMPROVEMENTS & MADISON AVENUE. SCHOOL SAFETY NECKDOWN

LOCATION(S): EAST 86TH STREET BETWEEN MADISON AND FIRST AVENUES
MADISON AVENUE BETWEEN EAST 83RD AND 86TH STREETS

PERMISSION IS HEREBY GRANTED TO THE {**NEW YORK CITY DEPARTMENT OF DESIGN & CONSTRUCTION**} AND ITS DULY AUTHORIZED AGENT, TO ENTER UPON AND RESTRICT THE FLOW OF TRAFFIC AT THE ABOVE LOCATION(S) FOR THE PURPOSE OF CARRYING OUT THE ABOVE NOTED PROJECT, SUBJECT TO THE STIPULATIONS, AS NOTED BELOW:

A. SPECIAL STIPULATIONS

1. **EMBARGOES** – A CONSTRUCTION EMBARGO WILL APPLY TO THOSE LOCATIONS BELOW WHICH FALL WITHIN THE **HOLIDAY EMBARGO** OR ANY OTHER SPECIAL EVENT EMBARGOES SUCH AS THE **{OTHER EMBARGOES IF APPLICABLE}** AS PUBLISHED BY THE BUREAU OF PERMIT MANAGEMENT AND CONSTRUCTION CONTROL.
2. **BIKE LANES** – IF WORK IS IN OR AFFECTING A BIKE LANE, THE PERMITTEE MUST POST ADVANCE WARNING SIGNS 350 FEET AND 200 FEET PRIOR TO THE WORK ZONE STATING **"CONSTRUCTION IN BIKE LANE AHEAD PROCEED WITH CAUTION"**, AND ALSO POST A SIGN AT THE WORK ZONE STATING **"CONSTRUCTION IN BIKE LANE PROCEED WITH CAUTION"**. SUCH SIGNS SHALL BE ORANGE, 3' X 3', DIAMOND-SHAPED WITH 4" BLACK LETTERING. SIGNS SHALL BE POSTED IN ACCORDANCE WITH THE FEDERAL MANUAL ON UNIFORM TRAFFIC CONTROL DEVICES (MUTCD).
3. **BIKE SHARE STATIONS:** THE PERMITTEE SHALL NOT REMOVE, RELOCATE, DAMAGE OR DISRUPT THE OPERATION OF EXISTING BIKE SHARE STATIONS WITHOUT FIRST CONTACTING NYC BIKE SHARE AT 855-245-3311 FOR THEIR REQUIREMENTS PRIOR TO COMMENCING WORK.
4. **BUS STOPS** – THE PERMITTEE SHALL PROVIDE WRITTEN NOTICE TO NYC DOT OCMC AND NEW YORK CITY TRANSIT (NYCT) A MINIMUM OF FIVE (5) WEEKS IN ADVANCE FOR LANE/STREET CLOSURES THAT AFFECT BUS ROUTES/BUS STOPS.
5. **STREET LIGHTS / TRAFFIC SIGNALS:** THE PERMITTEE SHALL NOT REMOVE OR RELOCATE EXISTING STREET LIGHTS OR TRAFFIC SIGNALS WITHOUT FIRST OBTAINING APPROVAL FROM NYCDOT STREET LIGHTING / TRAFFIC SIGNALS UNIT.
6. **TRAFFIC CAMERAS, DETECTION/COMMUNICATION EQUIPMENT:** IF AT ANY TIME DURING THE APPROVED WORK, THE PERMITTEE ENCOUNTERS TRAFFIC SURVEILLANCE CAMERAS, DETECTION EQUIPMENT OR ANY TYPE OF COMMUNICATION EQUIPMENT (WIRELESS OR HARD-WIRED) ON ANY NYC DOT FACILITY, THAT IS NOT INCLUDED ON THE DESIGN/BUILD DRAWINGS, THE PERMITTEE SHALL IMMEDIATELY NOTIFY NYC DOT TRAFFIC MANAGEMENT BY PHONE AT 718-433-3390 OR 718-433-3340 AND VIA EMAIL AT TMC@DOT.NYC.GOV AND AWAIT DIRECTION PRIOR TO CONTINUING WORK.
7. **METERS** – THE PERMITTEE SHALL NOT REMOVE OR RELOCATE PARKING METERS WITHOUT FIRST OBTAINING APPROVAL FROM NYCDOT PARKING METER DIVISION AT 718-894-8651.
8. **TEST PITS** – THE BELOW TRAFFIC STIPULATIONS DO NOT APPLY TO TEST PIT WORK RELATED TO THIS CONTRACT. WORK HOURS AND OTHER REQUIREMENTS FOR TEST PIT OPERATIONS MAY DIFFER FROM THE STIPULATIONS IDENTIFIED BELOW. THE PERMITTEE SHALL BE REQUIRED TO OBTAIN SEPARATE PERMITS RELATED TO TEST PITS.
9. **TEMPORARY PARKING REGULATIONS/PAVEMENT MARKINGS** – THE PERMITTEE IS REQUIRED TO INSTALL, MAINTAIN AND REMOVE ALL NECESSARY TEMPORARY PARKING AND REGULATORY SIGNS AND PAVEMENT MARKINGS, AND RESTORE THEIR ORIGINAL CONDITION PER NYC DOT STANDARDS, PRIOR TO EXPIRATION OF THEIR PERMITS. THE PERMITTEE OR AGENCY PERFORMING PUBLIC OUTREACH SHALL POST AND MAINTAIN ADVISORY SIGNS A MINIMUM OF 48 HOURS PRIOR TO CHANGING EXISTING PARKING REGULATION SIGNS TO APPROVED TEMPORARY CONSTRUCTION PARKING REGULATION SIGNS. THE ADVISORY SIGNS SHOULD BE POSTED ON ALL POLES AND DRIVE RAILS ON THE SEGMENT AFFECTED, INDICATING THE DATE OF THE CHANGE, THE NEW REGULATIONS AND A TELEPHONE NUMBER TO OBTAIN MORE INFORMATION.
10. **ACCESS TO ABUTTING PROPERTIES** – THE PERMITTEE SHALL COORDINATE ALL ACTIVITIES WITH ABUTTING PROPERTY OWNERS TO ENSURE ACCESS IS PROVIDED TO/FROM ENTRANCES/DRIVEWAYS AT ALL TIMES.

NYC Department of Transportation
Bureau of Permit Management and Construction Control
30-30 Thomson Avenue – 2nd Floor South
Long Island City, NY 11101
T: 212.839.9621 F: 718.391.3631
www.nyc.gov/dot

11. **AUTHORIZED PARKING** – PRIOR TO PERFORMING WORK WHICH IMPACTS AUTHORIZED PARKING, THE PERMITTEE SHALL SUBMIT IN WRITING, AND COPY OCMC-STREETS, A REQUEST TO OCCUPY SPACE CURRENTLY USED BY AUTHORIZED VEHICLES. APPROVAL MUST BE RECEIVED FROM AUTHORIZED PARKING PRIOR TO OCCUPYING THESE AREAS.
12. **NOTIFICATION** – THE PERMITTEE MUST AT LEAST TWO (2) WORKING DAYS BEFORE THE START OF CONSTRUCTION NOTIFY THE NYC FIRE DEPARTMENT, NYC POLICE DEPARTMENT, NYCEMS, LOCAL COMMUNITY BOARD, BOROUGH PRESIDENT'S OFFICE-CHIEF ENGINEER, NYCDOT OCMC OFFICE, AND ALL ABUTTING PROPERTY OWNERS.
13. **CONSTRUCTION INFORMATIONAL SIGNS** – THIS PROJECT REQUIRES A CONSTRUCTION PROJECT INFORMATIONAL SIGN (CPIS) IN ACCORDANCE WITH NYCDOT HIGHWAY RULE SECTION 2-02 (4) AND (5). CRITERIA AND A PROTOTYPE FOR THIS SIGN MAY BE FOUND ON THE NYCDOT WEBSITE AT:

    HTTP://WWW.NYC.GOV/HTML/DOT/DOWNLOADS/PDF/DOT_CPIS_DIRECTIONS.PDF

14. **ENHANCED MITIGATIONS**
    - ENHANCED MITIGATIONS FOR PEDESTRIAN FLOW, INCLUDING METAL FENCING, SHALL BE PROVIDED TO ENSURE PEDESTRIANS STAY WITHIN THEIR DESIGNATED PATH/ROUTE. FLAGGERS SHALL BE PROVIDED TO ASSIST WITH PEDESTRIANS AT THE DESIGNATED CROSSWALK AREAS. THESE FLAGGERS SHALL BE ASSIGNED TO THIS FUNCTION ONLY.
    - VARIABLE MESSAGE SIGNS (VMS) SHALL BE PROVIDED FOR THIS PROJECT. THE LOCATIONS AND MESSAGES SHALL BE RECOMMENDED BY NYCDDC AND THEIR CONTRACTOR A MINIMUM OF TWO (2) WEEKS PRIOR TO WORK COMMENCING, FOR OCMC REVIEW AND APPROVAL.
    - "NO STANDING ANYTIME-TEMPORARY CONSTRUCTION" SIGNS AND TEMPORARY PAVEMENT MARKINGS SHALL BE INSTALLED AND MAINTAINED AS WARRANTED BY THE MAINTENANCE AND PROTECTION OF TRAFFIC (MPT) REQUIRED TO FACILITATE TRAFFIC MOVEMENTS THROUGH THE WORK ZONE. ALL TEMPORARY SIGNS AND PAVEMENT MARKINGS SHALL BE REMOVED UPON COMPLETION OF THE PROJECT.
    - COMMUNITY OUTREACH SHALL BE PROVIDED FOR THE DURATION OF THE PROJECT.

B. MAINTENANCE AND PROTECTION OF TRAFFIC

1. WHEN WORKING ON EAST 86TH STREET BETWEEN MADISON AND FIRST AVENUES

- Work hours shall be as follows: 9am-4pm Monday thru Friday and Saturday 8am-4pm.
- **When working in school zone**, work hours shall be as follow: 9am-2pm Monday thru Friday and Saturday 8am-4pm.
- Contractor must maintain three (3) lanes at all time.
- Contractor must maintain minimum five (5) foot sidewalk at all time.
- Contractor shall only close one (1) crosswalk at a time.

2. WHEN WORKING ON MADISON AVENUE BETWEEN EAST 83RD AND 86TH STREETS

- Work hours shall be as follows: 7am-3pm Monday thru Friday and Saturday 8am-4pm.
- **When working in school zone**, work hours shall be as follow: 9am-2pm Monday thru Friday and Saturday 8am-4pm.
- Contractor must maintain three (3) lanes at all time, during water main, catch basin, curb, and sidewalk reconstruction, and maintain two (2) lanes during full depth reconstruction.
- Contractor must maintain minimum five (5) foot sidewalk at all time.
- Contractor shall only close one (1) crosswalk at a time.

3. WHEN WORKING IN THE INTERSECTION OF PARK AVENUE AND EAST 86TH STREET

- Work hours shall be as follows: 9am-3pm Monday thru Friday and Saturday 8am-4pm.
- **When working in school zone**, work hours shall be as follow: 9am-2pm Monday thru Friday and Saturday 8am-4pm.
- Contract must maintain three (3) lanes on East 86th Street, and four (4) lanes on Park Avenue, Two (2) lanes in direction at all time.
- Contractor must maintain minimum five (5) foot sidewalk at all time.
- Contractor shall only close one (1) crosswalk at a time.

4. WHEN WORKING IN THE INTERSECTION OF LEXINGTON AVENUE AND EAST 86TH STREET

- Work hours shall be as follows: 9am-3pm Monday thru Friday and Saturday 8am-4pm.
- **When working in school zone**, work hours shall be as follow: 9am-2pm Monday thru Friday and Saturday 8am-4pm.
- Contract must maintain three (3) lanes on East 86th Street, and two (2) lanes on Lexington Avenue at all time.
- Contractor must maintain minimum five (5) foot sidewalk at all time.
- Contractor shall only close one (1) crosswalk at a time.

5. WHEN WORKING IN THE INTERSECTION ON 3RD AVENUE AND EAST 86TH STREET

- Work hours shall be as follows: 9am-3pm Monday thru Friday and Saturday 8am-4pm
- **When working in school zone**, work hours shall be as follow: 9am-2pm Monday thru Friday and Saturday 8am-4pm.
- Contract must maintain three (3) lanes on East 86th Street and three (3) lanes on 3rd Avenue at all time.
- Contractor must maintain minimum five (5) foot sidewalk at all time.
- Contractor shall only close one (1) crosswalk at a time.

6. SPECIAL NOTE:

- Variance granted to work during school hours as stipulated by OCMC-Office.
- Contract must contact the **Resident Engineer** for the NYCT Second Avenue Subway project prior to commencing work. All work shall also be coordinated with all other ongoing construction in the area.
- Contract must coordinate with all businesses prior commencing work
- Contractor must coordinate with NYCTA Buses prior commencing work
- Contractor must coordinate with Authorized Parking Unit before removing any authorized parking signs.

7. NEW YORK CITY POLICE DEPARTMENT TRAFFIC AGENTS LOCATION: SIX (6) AGENTS-PLUS RELIEF

- Intersection of East 86th Street and Madison Avenue, one (1) agent
- Intersection of East 86th Street and Park Avenue, two (2) agents
- Intersection of East 86th Street and Lexington Avenue, one (1) agent
- Intersection of East 86th Street and Third Avenue, one (1) agent
- Intersection of East 86th Street and Madison Avenue, one (1) agent
- Intersection of East 85th Street and Madison Avenue, one (1) agent

C. GENERAL NOTES

1. **THIS IS NOT A PERMIT.** THIS STIPULATION SHEET MUST BE SUBMITTED WITH ALL REQUESTS FOR PERMITS PERTAINING TO THE ABOVE CONTRACT AND PRESENT AT THE WORK SITE ALONG WITH ALL ACTIVE CONSTRUCTION PERMITS WHEN THE APPROVED WORK IS BEING PERFORMED.
2. THE CONTRACTOR MUST COMPLY WITH ALL CONSTRUCTION EMBARGOS ISSUED BY THE NYCDOT INCLUDING THE HOLIDAY EMBARGO.
3. THE CONTRACTOR SHALL COMPLY WITH ALL REQUIREMENTS OF THE NYCDOT SPECIAL EVENTS UNIT AS IDENTIFIED BELOW:

A. STREET FAIRS / FESTIVALS

- ALL EXCAVATIONS MUST BE PLATED WITH SKID RESISTANT PLATES.
- PLATES MUST BE RECESSED AND FLUSH WITH PAVEMENT.
- ALL PAVEMENT DEFECTS MUST BE CORRECTED WITHIN OR ADJACENT TO THE WORK ZONE.
- THE CONTRACTOR IS RESPONSIBLE FOR ANY DEFECTS WITHIN THE IMMEDIATE VICINITY IF NYCDOT STREET & ARTERIAL MAINTENANCE CANNOT MAKE REPAIRS DUE TO PROJECT INTERFERENCE (AS DETERMINED BY NYCDOT).
- ALL EQUIPMENT, TRAILERS AND MATERIAL STORAGE MUST BE REMOVED.

B. RUNNING / WALKING / BIKING EVENTS

- ALL EXCAVATIONS MUST BE BACKFILLED AND PAVED OR PLATES MUST BE RECESSED AND PAVED OVER FLUSH WITH PAVEMENT.
- ALL PAVEMENT DEFECTS MUST BE CORRECTED WITHIN OR ADJACENT TO THE WORK ZONE.
- THE CONTRACTOR IS RESPONSIBLE FOR ANY DEFECTS WITHIN THE IMMEDIATE VICINITY IF NYCDOT STREET & ARTERIAL MAINTENANCE CANNOT MAKE REPAIRS DUE TO PROJECT INTERFERENCE (AS DETERMINED BY NYCDOT).
- ALL EQUIPMENT, TRAILERS AND MATERIAL STORAGE MUST BE REMOVED.

C. PARADES

- ALL EXCAVATIONS MUST BE BACKFILLED AND PAVED OR PLATES MUST BE RECESSED AND PAVED OVER FLUSH WITH PAVEMENT.
- FORMATION AND DISPERSAL AREA PLATES MUST BE RECESSED AND FLUSH WITH PAVEMENT (PLATES MUST BE SKID RESISTANT).
- ALL PAVEMENT DEFECTS MUST BE CORRECTED WITHIN OR ADJACENT TO THE WORK ZONE.
- THE CONTRACTOR IS RESPONSIBLE FOR ANY DEFECTS WITHIN THE IMMEDIATE VICINITY IF NYCDOT STREET & ARTERIAL MAINTENANCE CANNOT MAKE REPAIRS DUE TO PROJECT INTERFERENCE (AS DETERMINED BY NYCDOT).
- ALL EQUIPMENT, TRAILERS AND MATERIAL STORAGE MUST BE REMOVED.

D. MAYORAL EVENTS

- ALL EXCAVATIONS MUST BE BACKFILLED AND PAVED OR PLATES MUST BE RECESSED AND PAVED OVER FLUSH WITH PAVEMENT.
- ALL PAVEMENT DEFECTS MUST BE CORRECTED WITHIN OR ADJACENT TO THE WORK ZONE.
- THE CONTRACTOR IS RESPONSIBLE FOR ANY DEFECTS WITHIN THE IMMEDIATE VICINITY IF NYCDOT STREET & ARTERIAL MAINTENANCE CANNOT MAKE REPAIRS DUE TO PROJECT INTERFERENCE (AS DETERMINED BY NYCDOT).
- ALL EQUIPMENT, TRAILERS AND MATERIAL STORAGE MUST BE REMOVED.

4. ALL RELOCATION WORK BY THE UTILITIES SUCH AS; CON EDISON, TELEPHONE, GAS AND CABLE COMPANIES SHALL PRECEDE THE CONTRACTORS' START OF WORK ON ALL AFFECTED ROADWAYS IN THE IMPACTED CONTRACT AREA.

5. THE CONTRACTOR IS ADVISED THAT OTHER CONTRACTORS MAY BE WORKING IN THE GENERAL AREA DURING THE TERM OF THIS STIPULATION. IN WHICH EVENT, THE CONTRACTOR MAY REQUIRE MODIFICATIONS BY THE OCMC-STREETS.

6. THE PERMITTEE IS NOT AUTHORIZED TO ENTER, OCCUPY OR USE ANY PUBLICLY-OWNED OR PRIVATELY OWNED, NON-PAVED, LANDSCAPE OR NON-LANDSCAPED LOCATION WITHOUT SPECIFIC WRITTEN PERMISSION. WHEN THE LOCATION IS WITHIN THE RIGHT-OF-WAY OF A LIMITED-ACCESS ARTERIAL HIGHWAY, **WRITTEN** APPROVAL FROM THE NYCDOT OCMC-HIGHWAYS IS REQUIRED. WHEN THE LOCATION IS WITHIN THE RIGHT-OF-WAY OF A PUBLIC STREET OR PUBLIC PARK, **WRITTEN** APPROVAL FROM THE NEW YORK CITY DEPARTMENT OF TRANSPORTATION OR NEW YORK CITY DEPARTMENT OF PARKS AND RECREATION IS REQUIRED. WHEN THE LOCATION IS WITHIN THE RIGHT-OF-WAY OF ANY OTHER JURISDICTION SUCH AS PRIVATE PROPERTY, STATE, FEDERAL ETC., IT IS THE PERMITTEE'S RESPONSIBILITY TO DETERMINE THE PROPERTY OWNER AND OBTAIN THE WRITTEN APPROVAL.

7. THE PERMITTEE SHALL ADHERE TO THE NYCDOT BUREAU OF BRIDGES' SPECIAL PROVISIONS FOR LANDSCAPE PROTECTION, MAINTENANCE AND RESTORATION, ITEMS 1.18.15 THROUGH 1.18.19, WHENEVER AND WHEREVER ANY OF THE PERMITTEE'S ACTIVITIES OCCUR WITHIN A LIMITED ACCESS ARTERIAL HIGHWAY RIGHT - OF - WAY.

8. NO DEVIATION OR DEPARTURE FROM THESE STIPULATIONS WILL BE PERMITTED WITHOUT THE PRIOR WRITTEN APPROVAL FROM THE OCMC-STREETS. REQUEST FOR SUCH MODIFICATIONS SHALL BE SUBMITTED TO THE OFFICE OF THE OCMC-STREETS, NEW YORK CITY DEPARTMENT OF TRANSPORTATION, A MINIMUM OF TWENTY (20) DAYS IN ADVANCE FOR CONSIDERATION.

9. FOR ANY CONSTRUCTION ACTIVITY RESULTING IN THE FULL CLOSURE OF A ROADWAY FOR MORE THAN 180 CONSECUTIVE CALENDAR DAYS, THE CONTRACTOR MUST PRODUCE AND SUBMIT A COMMUNITY REASSESSMENT, IMPACT AND AMELIORATION (CRIA) STATEMENT TO NYCDOT PLANNING AND OBTAIN THEIR APPROVAL BEFORE APPLYING FOR PERMITS, IN COMPLIANCE WITH THE PROVISIONS OF **LOCAL LAW 24 STREET CLOSURE LAW.**

10. FOR THIS PROJECT THE CONTRACTOR SHALL FURNISH, INSTALL AND MAINTAIN ALL NECESSARY ADVANCE WARNING AND DETOUR SIGNS, TEMPORARY CONTROL DEVICES, BARRICADES, LIGHTS AND FLASHING ARROW BOARDS IN ACCORDANCE WITH THE "MANUAL ON UNIFORM TRAFFIC CONTROL DEVICES," THE TYPICAL SCHEMES INCLUDED IN THIS SPECIFICATION; AND AS ORDERED BY THE ENGINEER-IN-CHARGE AND THE OCMC-STREETS.

11. THE CONTRACTOR SHALL BE RESPONSIBLE FOR IDENTIFYING HIS CONSTRUCTION SIGNAGE. THE IDENTIFICATION SHALL INCLUDE THE CONTRACTOR'S NAME, SPONSORING AGENCY NAME AND THE CONTRACT NUMBER. THE IDENTIFICATION SHALL BE PLACED ON THE BACK OF THE SIGN. THE LETTERING SHALL BE THREE (3) INCHES HIGH.

12. THE OCMC-STREETS RESERVES THE RIGHT TO VOID OR MODIFY THESE STIPULATIONS SHOULD CONSTRUCTION FAIL TO COMMENCE WITHIN TWO (2) YEARS OF THE SIGNED DATE OF THESE STIPULATIONS.

OCMC FILE NO: MEC-13-493

November 19, 2014

CONTRACT NO: HWMM008

PROJECT: EAST 86TH ST. STREETSCAPE IMPROVEMENTS & MADISON AVENUE. SCHOOL SAFETY NECKDOWN

JOSEPH P. NOTO
EXECUTIVE DIRECTOR
OCMC-STREETS

GARY SMALLS
PROJECT MANAGER
OCMC-STREETS

THE CITY OF NEW YORK Department of Sanitation

S. ELIZABETH SEARLE
Assistant Commissioner
for Legal Affairs

Bureau of Legal Affairs
44 Beaver Street
New York, NY 10004
Telephone (212) 837-8110
FAX (212) 837-8243

Department of Sanitation Rules and Regulations Governing Non-Putrescible Solid Waste Transfer Stations

INTERPRETIVE MEMORANDUM # 2
February 14, 1995

Subject: Temporary Storage and Processing of Construction and Demolition Debris by New York City Agency Contractors

Contractors performing construction work for New York City agencies may be required to excavate dirt, concrete, rock, gravel and similar materials ("construction materials") from a contract site or to remove from a contract site construction materials resulting from construction, demolition, alteration, repair or renovation of structures, streets or buildings. On street construction projects, construction materials required to be excavated or removed may also include asphalt. The purpose of this Interpretive Memorandum is to (a) define the circumstances under which the Department of Sanitation (the "Department") will not deem its Rules and Regulations Governing Non-Putrescible Solid Waste Transfer Stations (the "Rules") to apply to the temporary storage, processing and/or stockpiling (collectively, "stockpiling") of such construction materials and (b) the procedure for ensuring such exemption. It is the responsibility of the contracting agency to oversee its contractors' compliance with the Rules and with this Interpretive Memorandum.

1. When No Transfer Station Permit is Required

Where a City contractor has:

(a) set aside an area of a contract site for stockpiling construction materials excavated from and/or intended for that site; or

(b) received written approval from the contracting agency for an off-site stockpiling location,

the Department will not deem such stockpiling location a transfer station and will not require the contractor to obtain a transfer station permit so long as:

(c) no construction materials or debris from off the contract site are received at the designated location for subsequent transfer to another location (other than the contract site); and

(d) the temporary stockpiling location is clearly described as such in the contract or clearly approved by the construction agency and designated as such in writing to the Department by the agency; and

(e) the construction agency represents in writing to the Department that such agency will monitor the temporary stockpiling location and ensure its clean-up and restoration pursuant to the procedures set out in this memorandum.

printed on recycled paper

Help Reduce New York's Waste.

Example: Street Construction Projects

As part of a contract for street construction, the contractor may be working at one end of a street and using an area at the other end of the street for the temporary stockpiling of construction materials. Both ends of the street are part of the construction contract site. In addition, the contractor may have leased an off-site location for temporary stockpiling of materials, which, following processing, will be reincorporated into the contract site, with some portion of the remainder designated for delivery to a Department disposal facility. Neither location will be regulated by the Department as a transfer station so long as the procedures set out in this memorandum are followed.

2. Procedure for Exception.

Upon a City construction agency's approval of any location to be designated as a temporary processing, storage or stockpiling area, that agency must determine that (a) its contract with the contractor provides for clean-up and restoration of such area by, for example, the contractor's posting of a restoration bond and/or by contractual set-off and (b) the agency has adequate procedures for monitoring the designated area to ensure that it does not violate the provisions set forth in this memorandum and that such location is cleaned up and restored at the completion of the contract work.

The City construction agency must submit an official letter to the Department acknowledging compliance with both (a) and (b) immediately above and representing that the agency will ensure the contractor's compliance. *The letter to be submitted must be in substantially the following form, addressed to the Director, Bureau of Waste Disposal,* Department of Sanitation, 125 Worth Street, Room 726, New York, NY 10013:

"The New York City Department of _____ (the "Agency") has awarded a construction contract to _____ (Contractor) _____ (the "Contractor") for work to be performed at _____ (Contract Site) _____ .

a. This Agency has approved the following locations to be used by the Contractor for the temporary storage, processing and/or stockpiling of construction materials (the "Stockpiling Locations") excavated from the construction site or intended for the construction site:

_____

_____

_____

_____

b. The terms of the contract require the Contractor to clean up and restore the Stockpiling Locations, whether on or off the contract site, at or before the completion of the contract work.

c. This Agency assumes responsibility for the monitoring of Stockpiling Locations to ensure that only materials received from and/or intended for the construction site are stockpiled at such locations and we will enforce clean-up and restoration of such Locations at the end of their use for temporary stockpiling or at the termination of the contract, whichever occurs earlier, through restoration

bonding requirements and/or contractual set-off provisions such that the costs of clean-up and restoration will not become a charge to the Department or the City. "

3. When a Transfer Station Permit is Required

A transfer station permit will be required under any circumstances other than those outlined above. Except in the specifically defined circumstances set forth in this memorandum, any operator of a location or facility which receives, processes, stores or stockpiles construction and demolition debris or fill material for purposes of transfer to another location, including to a New York City Department of Sanitation facility, and whether or not under contract to the Department for the delivery of such materials, will be fully subject to the Department's transfer station rules and liable for enforcement for violations.

ATTACH TO CONTRACT DOCUMENTS

THE CITY OF NEW YORK
DEPARTMENT OF DESIGN AND CONSTRUCTION
INFRASTRUCTURE DIVISION
BUREAU OF DESIGN

PROJECT ID: HWMM008

SAFETY AND STREETSCAPE IMPROVEMENTS
EAST 86TH STREET BETWEEN PARK AVENUE AND SECOND AVENUE

SCHOOL SAFETY NECKDOWNS
MADISON AVENUE BETWEEN EAST 84TH STREET AND EAST 85TH STREET

INCLUDING WATER MAIN, STREET LIGHTING, AND TRAFFIC SIGNAL WORK

Together With All Work Incidental Thereto

BOROUGH OF MANHATTAN
CITY OF NEW YORK

ADDENDUM NO. 2

DATED: March 21, 2014

THIS ADDENDUM IS HEREBY MADE A PART OF THE CONTRACT DOCUMENTS

1. Any substantial modification of the Contract shall be subject to approval by the State Commissioner of Transportation and the Federal Transit Administration, in addition to the City agencies involved.

2. The Contractor shall be responsible for compliance with all the provisions of the following Federal Transit Administration (FTA) Third Party Requirements, Standard Clauses for all New York State Contracts, and Exhibits which are hereby made a part of the original contract documents and are annexed hereto:

FEDERAL TRANSIT ADMINISTRATION (FTA) THIRD PARTY REQUIREMENTS

Appendix A - BUY AMERICA CERTIFICATION
Appendix A1 - DISCLOSURE OF LOBBYING ACTIVITIES
Appendix A2 - CERTIFICATION OF A CONTRACTOR REGARDING DEBARMENT, SUSPENSION AND OTHER RESPONSIBILITY MATTERS
Appendix A3 - CERTIFICATION OF A SUBCONTRACTOR/SUPPLIER REGARDING DEBARMENT, SUSPENSION AND OTHER RESPONSIBILITY MATTERS
Appendix B - REQUIRED CONTRACT PROVISIONS DBE Program
Appendix C - DETERMINING GOOD FAITH EFFORTS
Appendix D - PROMPT PAYMENT AFFIDAVIT
Appendix E - SAMPLE PRIME CONTRACTOR AWARD LETTER
Appendix F - MINORITY OWNED FINANCIAL INSTITUTIONS
Appendix G - PREVAILING WAGE RATES, CURRENT DAVIS-BACON PREVAILING WAGE RATES

STANDARD CLAUSES FOR ALL NEW YORK STATE CONTRACTS

DBE FORMS:

AAP 15 FTA Rev. (1/14)	DESIGNATION OF AFFIRMATIVE ACTION (REPRESENTATIVES BY CONTRACTORS/SUBCONTRACTORS
AAP10 (01/14)	NYC Department of Transportation DBE SOLICITATIONS LOG
AAP 19 FTA (1/14)	NEW YORK CITY DEPARTMENT OF TRANSPORTATION DISADVANTAGED BUSINESS ENTERPRISE SCHEDULE OF UTILIZATION
AAPHC 89 FTA (1/14)	NEW YORK CITY DEPARTMENT OF TRANSPORTATION DBE UTILIZATION WORKSHEET
AAPHC 89-1 FTA (1/14)	NEW YORK CITY DEPARTMENT OF TRANSPORTATION DBE UTILIZATION WORKSHEET AMENDMENT
AAP 21LL (FTA) (rev. 1/14)	NYC Department of Transportation Contractor Report of Contract Payments
AAP 22 (12/08)	PRE-AWARD D/M/WBE MATERIAL SUPPLIER COMMITMENT INFORMATION
AAP 23LL (2/11)	PRE-AWARD DBE TRUCKING COMMITMENT INFORMATION
	SUBCONTRACTOR/CONSULTANT PROFILE FORM
	INITIAL LIST OF SUBCONTRACTORS
	SUBCONTRACTOR/SUBCONSULTANT MONTHLY PAYMENT REPORT
	AGENCY CHIEF CONTRACTING OFFICE, CIVIL RIGHTS COMPLAINT FORM
	ANNUAL LIST OF SUBCONTRACTORS

In addition to compliance with the above FTA requirements, the Contractor shall also be required to comply with all City requirements as depicted in the Information for Bidders and Standard Construction Contract herein. Wherever a conflict may exist, the FTA Regulations shall take precedence.

3. All references to M/WBE within the Bid Documents shall be deleted and the Disadvantaged Business Enterprise (DBE) requirements with a goal of 5% shall be substituted.

4. Amendments to Information for Bidders:

   a) Refer to Page 6, SECTION 20. Low Tie Bids;
   Delete Article 20, in its entirety, and substitute the words "**ARTICLE 20. (NO TEXT)**".

   b) Refer to Pages 12 and 13, SECTION 37. Locally Based Enterprise Requirements (LBE);
   Delete the SECTION 37, in its entirety, and substitute the words "**ARTICLE 37. (NO TEXT)**". See FEDERAL TRANSIT ADMINISTRATION (FTA) THIRD PARTY REQUIREMENTS attachment, Article 28. Disadvantaged Business Enterprise (DBE)(49 CFR Part 26) and Appendices B, C, D, and E.

5. Amendments to Standard Construction Contract:

   a) Refer to Page 29, ARTICLE 21. RETAINED PERCENTAGE;
   Delete Article 29, in its entirety;
   Substitute the following:

"ARTICLE 21. (NO TEXT)"

   b) Refer to Page 74 and 75, ARTICLE 67. LOCALLY BASED ENTERPRISE PROGRAM;
   Delete Article 67, in its entirety, and substitute the words "**ARTICLE 67. (NO TEXT)**". See FEDERAL TRANSIT ADMINISTRATION (FTA) THIRD PARTY REQUIREMENTS attachment, Article 29. Disadvantaged Business Enterprise (DBE)(49 CFR Part 26) and Appendices B, C, D, and E.

6. Amendments to the NYC Department of Transportation Standard Highway Specifications, Volume I, General Conditions:

   a) Refer to Pages 36 through 38, Article 1.06.46. Project Sign;
   Add the following text to the end of Article 1.06.46:

"(B) ADDITIONAL FTA PROJECT SIGN

In addition to the Project Sign specified in Subsection 1.06.46.(A), above, the Contractor shall also be required to furnish and install an FTA Project Sign as shown on the attached drawing. The FTA Project Sign shall be posted and maintained upon

the site at a point and in a prominent position where directed by the Commissioner. The Contractor shall protect and repair the sign from damage during the continuance of work under the Contract. In addition, the requirements for Sign Quality, Schedule, and Removal as specified under Subsection 1.06.46.(A)2, 3, and 4 shall also apply to the FTA Project Sign and the sign panel material shall be the same as that used for the Project Sign required under Subsection 1.06.46.(A), but with the dimensions of the sign as shown on the attached drawing."

FTA PROJECT SIGN

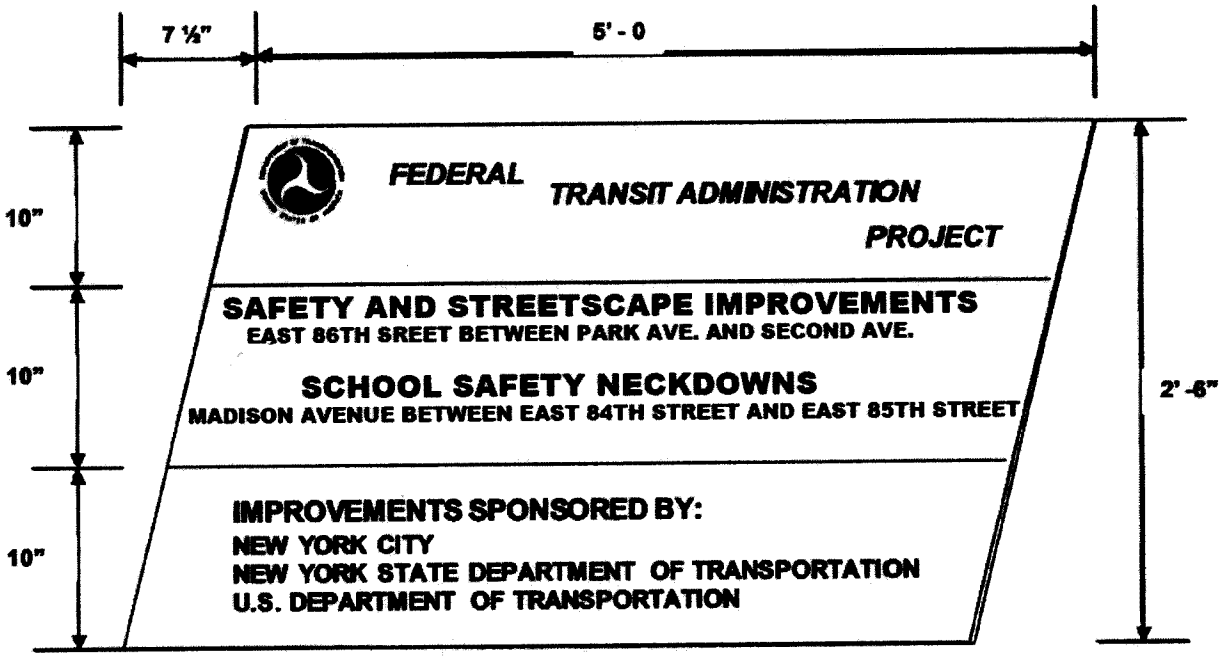

1 WHITE LETTERS – RED BACKGROUND (topmost band)
2 BLUE LETTERS – WHITE BACKGROUND (middle Band)
3 WHITE LETTERS – BLUE BACKGROUND (Bottom band)
* USDOT logo to be positioned at the left upper corner of 1.

FEDERAL TRANSIT ADMINISTRATION
(FTA)
THIRD PARTY REQUIREMENTS

March 2015

The Third Party Requirements in this contract comply with the standard terms and conditions as outlined in the Federal Transit Administration (FTA) Fiscal Year (FY) 2015 Master Agreement authorized by 49 U.S.C. chapter 53, as amended, Title 23, United States Code (Highways), the Moving Ahead for Progress in the 21st Century Act (MAP-21), the Safe, Accountable, Flexible, Efficient Transportation Equity Act: A Legacy for Users (SAFETEA-LU), as amended by the SAFETEA-LU Technical Corrections Act of 2008, or other Federal laws that FTA administers.

For purposes of the FTA Third Party Requirements, "the City" shall mean the New York City agency that procured the contract in which this document is incorporated.

This contract is subject to the Federal Transit Administration (FTA) requirements for implementing the U.S. Department of Transportation (USDOT) regulations for the following areas:

1. FLY AMERICA (49 U.S.C. § 40118, 41 CFR Part 301-10)

Fly America Requirements - The Contractor agrees to comply with 49 U.S.C. 40118 (the "Fly America" Act) in accordance with the General Services Administration's regulations at 41 CFR Part 301-10, which provide that recipients and subrecipients of Federal funds and their contractors are required to use U.S. Flag air carriers for U.S Government-financed international air travel and transportation of their personal effects or property, to the extent such service is available, unless travel by foreign air carrier is a matter of necessity, as defined by the Fly America Act. The Contractor shall submit, if a foreign air carrier was used, an appropriate certification or memorandum adequately explaining why service by a U.S. flag air carrier was not available or why it was necessary to use a foreign air carrier and shall, in any event, provide a certificate of compliance with the Fly America requirements. The Contractor agrees to include the requirements of this section in all subcontracts that may involve international air transportation.

2. BUY AMERICA (49 U.S.C. 5323 (j), 49 CFR Part 661)

Buy America - The contractor agrees to comply with 49 U.S.C. 5323(j) and 49 C.F.R. Part 661, which provide that Federal funds may not be obligated unless steel, iron, and manufactured products used in FTA-funded projects are produced in the United States, unless a waiver has been granted by FTA or the product is subject to a general waiver. General waivers are listed in 49 C.F.R. 661.7, and include final assembly in the United States for 15 passenger vans and 15 passenger wagons produced by Chrysler Corporation, and microcomputer equipment and software. Separate requirements for rolling stock are set out at 49 U.S.C. 5323(j)(2)(C) and 49 C.F.R. 661.11. Rolling stock must be assembled in the United States and have a 60 percent domestic content.

A bidder or offeror must submit to the FTA recipient the appropriate Buy America certification with all bids or offers on FTA-funded contracts, except those subject to a general waiver. Bids or offers that are not accompanied by a completed Buy America certification must be rejected as nonresponsive. This requirement does not apply to lower tier subcontractors.

3. CHARTER BUS REQUIREMENTS (49 U.S.C. 5323(d), 49 CFR Part 604)

Charter Service Operations - The contractor agrees to comply with 49 U.S.C. 5323(d) and 49 CFR Part 604, which provides that recipients and subrecipients of FTA assistance are prohibited from providing charter service using federally funded equipment or facilities if there is at least one private charter operator willing and able to provide the service, except under one of the exceptions at 49 CFR 604.9. Any charter service provided under one of the exceptions must be "incidental," i.e., it must not interfere with or detract from the provision of mass transportation.

4. SCHOOL BUS REQUIREMENTS (49 U.S.C. 5323(F), 49 CFR Part 605)

School Bus Operations - Pursuant to 49 U.S.C. 5323(f) and 49 CFR Part 605, recipients and subrecipients of FTA assistance may not engage in school bus operations exclusively for the transportation of students and school personnel in competition with private school bus operators unless qualified under specified exemptions. When operating exclusive school bus service under an allowable exemption, recipients and subrecipients may not use federally funded equipment, vehicles, or facilities.

5. CARGO PREFERENCE (46 U.S.C. 55305, 46 CFR Part 381)

Cargo Preference – Use of United States-Flag Vessels - The contractor agrees: a. privately owned United States-Flag commercial vessels to ship at least 50 percent of the gross tonnage (computed separately for dry bulk carriers, dry cargo liners, and tankers) involved, whenever shipping any equipment, material, or commodities pursuant to the underlying contract to the extent such vessels are available at fair and reasonable rates for United States-Flag commercial vessels; b. to furnish within 20 working days following the date of loading for shipments originating within the United States or within 30 working days following the date of leading for shipments originating outside the United States, a legible copy of a rated, "on-board" commercial ocean bill-of -lading in English for each shipment of cargo described in the preceding paragraph to the Division of National Cargo, Office of Market Development, Maritime Administration, Washington, DC 20590 and to the FTA recipient (through the contractor in the case of a subcontractor's bill of lading.) c. to include these requirements in all subcontracts issued pursuant to this contract when the subcontract may involve the transport of equipment, material, or commodities by ocean vessel.

6. SEISMIC SAFETY REQUIREMENTS (42 U.S.C. 7701 et seq., 49 CFR Part 41)

Seismic Safety - The contractor agrees that any new building or addition to an existing building will be designed and constructed in accordance with the standards for Seismic Safety required in Department of Transportation Seismic Safety Regulations 49 CFR Part 41 and will certify to compliance to the extent required by the regulation. The contractor also agrees to ensure that all work performed under this contract including work performed by a subcontractor is in compliance with the standards required by the Seismic Safety Regulations and the certification of compliance issued on the project.

7. ENERGY CONSERVATION (42 U.S.C. 6321 et seq., 49 CFR Part 622, subpart C)

Energy Conservation - The Contractor agrees to comply with mandatory standards and policies relating to energy efficiency which are contained in the state energy conservation plan issued in compliance with the Energy Policy and Conservation Act.

8. CLEAN WATER (33 U.S.C. 1251-1377)

Clean Water - (1) The Contractor agrees to comply with all applicable standards, orders or regulations issued pursuant to the Clean Water Act, as amended, 33 U.S.C. 1251-1377. The Contractor agrees to report each violation to recipient and understands and agrees that recipient will, in turn, report each violation as required to assure notification to FTA and the appropriate EPA Regional Office.

(2) The Contractor also agrees to include these requirements in each subcontract exceeding $100,000 financed in whole or in part with Federal assistance provided by FTA.

9. BUS TESTING (49 U.S.C. 5318(e), 49 CFR Part 665)

Bus Testing - The Contractor agrees to comply with 49 USC 5318 (e) and FTA's implementing regulation at 49 CFR Part 665 and shall perform the following:

1) A manufacturer of a new bus model or a bus produced with a major change in components or configuration shall provide a copy of the final test report to the recipient at a point in the procurement process specified by the recipient which will be prior to the recipient's final acceptance of the first vehicle.

2) A manufacturer who releases a report under paragraph 1 above shall provide notice to the operator of the testing facility that the report is available to the public.

3) If the manufacturer represents that the vehicle was previously tested, the vehicle being sold should have the identical configuration and major components as the vehicle in the test report, which must be provided to the recipient prior to recipient's final acceptance of the first vehicle. If the configuration or components are not identical, the manufacturer shall provide a description of the change and the manufacturer's basis for concluding that it is not a major change requiring additional testing.

4) If the manufacturer represents that the vehicle is "grandfathered" (has been used in mass transit service in the United States before October 1, 1988, and is currently being produced without a major change in configuration or components), the manufacturer shall provide the name and address of the recipient of such a vehicle and the details of that vehicle's configuration and major components.

10. PRE-AWARD AND POST DELIVERY AUDITS REQUIREMENTS (49 U.S.C. 5323, 49 CFR Part 663)

The Contractor agrees to comply with 49 U.S.C. §5323(m) and FTA's implementing regulation 49 CFR Part 663 and to submit the following certifications:

(1) Buy America Requirements: The Contractor shall complete and submit a declaration certifying either compliance or noncompliance with Buy America. If the Bidder/Offeror certifies compliance with Buy America, it shall submit documentation which lists 1) component and subcomponent parts of the rolling stock to be purchased identified by manufacturer of the parts, their country of origin and costs; and 2) the location of the final assembly point for the rolling stock, including a description of the activities that will take place at the final assembly point and the cost of final assembly.

(2) Solicitation Specification Requirements: The Contractor shall submit evidence that it will be capable of meeting the bid specifications.

(3) Federal Motor Vehicle Safety Standards (FMVSS): The Contractor shall submit 1) manufacturer's FMVSS self-certification sticker information that the vehicle complies with relevant FMVSS or 2) manufacturer's certified statement that the contracted buses will not be subject to FMVSS regulations.

11. LOBBYING (31 U.S.C. 1352, 49 CFR Part 20)

Contractors who apply or bid for an award of $100,000 or more shall file the certification required by 49 CFR part 20, "New Restrictions on Lobbying." Each tier certifies to the tier above that it will not and has not used Federal appropriated funds to pay any person or organization for influencing or attempting to influence an officer or employee of any agency, a member of Congress, officer or employee of Congress, or an employee of a member of Congress in connection with obtaining any Federal contract, grant or any other award covered by 31 U.S.C. 1352. Each tier shall also disclose the name of any registrant under the Lobbying Disclosure Act of 1995 who has made lobbying contacts on its behalf with non-Federal funds with respect to that Federal contract, grant or award covered by 31 U.S.C. 1352. Such disclosures are forwarded from tier to tier up to the recipient.

12. ACCESS TO RECORDS AND REPORTS (49 U.S.C. 5325 (g), 49 CFR §18.36(i)(10), 49 CFR § 19.53 (e) until USDOT promulgates new regulations that will supersede and apply in lieu of 49 CFR parts 18 and 19 and 49 CFR 633.15)

The Contractor shall comply with the following access to records requirements:

1. In accordance with 49 CFR 18.36(i), the Contractor agrees to provide the City, the FTA Administrator, the Comptroller General of the United States or any of their authorized representatives access to any books, documents, papers and records of the Contractor which are directly pertinent to this contract for the purposes of making audits, examinations, excerpts and transcriptions. Contractor also agrees, pursuant to 49 C. F. R. § 18.40 (e) or 49 CFR § 19.51 (g) to provide the FTA Administrator or his/her authorized representatives including any PMO Contractor access to Contractor's records and construction sites pertaining to a major capital project, defined at 49 U.S.C. 5302(a) 1, which is receiving federal financial assistance through the programs described at 49 U.S.C. 5307, 5309 or 5311.

2. Where the City, in accordance with 49 U.S.C. 5325(a) enters into a contract for a capital project or improvement (defined in 49 U.S.C. 5302(a) (1) through other than competitive bidding, the Contractor shall make available records related to the contract to the City, the Secretary of Transportation and the Comptroller General or any authorized officer or employee of any of them for the purposes of conducting an audit and inspection.

3. The Contractor agrees to permit any of the foregoing parties to reproduce by any means whatsoever or to copy excerpts and transcriptions as reasonably needed.

4. The Contractor agrees to maintain all books, records, accounts, reports and other related documents required under this contract for a period of not less than three years after the date of termination or expiration of this contract, except in the event of litigation or settlement of claims arising from the performance of this contract, in which case Contractor agrees to maintain same until the City, the FTA Administrator, the Comptroller General, or any of their duly authorized representatives, have disposed of all such litigation, appeals, claims or exceptions related thereto. (Reference 49 CFR 18.39 (i)(11).

5. FTA does not require the inclusion of these requirements in subcontracts.

Requirements for Access to Records and Reports by Types of Contract

Contract Characteristics	Operational Service Contract	Turnkey	Construction	Architectural Engineering	Acquisition of Rolling Stock	Professional Services
I. State Grantees						
a. Contracts below SAT ($100,000)	None	Those imposed on state pass thru to Contractor	None	None	None	None
b. Contracts above $100,000/ Capital Projects	None unless[1] non-competitive award		Yes, if non-competitive award or if funded thru[2] 5307/5309/ 5311	None unless non-competitive award	None unless non-competitive award	None unless non-competitive award
II . Non State Grantees						
a. Contracts below SAT ($100,000)	Yes[3]	Those imposed on non-state Grantee pass thru to Contractor	Yes	Yes	Yes	Yes
b. Contracts above $100,000/Capital Project	Yes[3]		Yes	Yes	Yes	Yes

Sources of Authority:

[1] 49 USC 5325 (g)

[2] 49 CFR 633.15

[3] 49 CFR 18.36 (i)

SAT: Source Acquisition Threshold

13. FEDERAL CHANGES (49 CFR Part 18)

Federal Changes - The Contractor shall at all times comply with all applicable FTA regulations, policies, procedures and directives, including without limitation those listed directly or by reference in the Master Agreement between the City and FTA, as they may be amended or promulgated from time to time during the term of this contract. Contractor's failure to so comply shall constitute a material breach of this contract.

14. BONDING REQUIREMENTS

(a) Bid Security

A Bid Bond must be issued by a fully qualified surety company acceptable to the City and listed as a company currently authorized under 31 CFR, Part 223 as possessing a Certificate of Authority as described thereunder.

(b) Rights Reserved

In submitting this Bid, it is understood and agreed by bidder that the right is reserved by the City to reject any and all bids, or part of any bid, and it is agreed that the Bid may not be withdrawn for a period of [ninety (90)] days subsequent to the opening of bids, without the written consent of the City.

It is also understood and agreed that if the undersigned bidder should withdraw any part or all of his bid within [ninety (90)] days after the bid opening without the written consent of the City, shall refuse or be unable to enter into this Contract, as provided above, or refuse or be unable to furnish adequate and acceptable Performance Bonds and Labor and Material Payments Bonds, as provided above, or refuse or be unable to furnish adequate and acceptable insurance, as provided above, he shall forfeit his bid security to the extent of the City's damages occasioned by such withdrawal, or refusal, or inability to enter into an agreement, or provide adequate security therefor.

It is further understood and agreed that to the extent the defaulting bidder's Bid Bond, Certified Check, Cashier's Check, Treasurer's Check, and/or Official Bank Check (excluding any income generated thereby which has been retained by the City as provided in [Item x "Bid Security" of the Instructions to Bidders]) shall prove inadequate to fully recompense the City for the damages occasioned by default, then the undersigned bidder agrees to indemnify the City and pay over to the City the difference between the bid security and the City's total damages, so as to make the City whole.

The undersigned understands that any material alteration of any of the above or any of the material contained on this form, other than that requested, will render the bid unresponsive.

Performance and Payment Bonding Requirements (Construction)

The Contractor shall be required to obtain performance and payment bonds as follows:

(a) Performance bonds

1. The penal amount of performance bonds shall be 100 percent of the original contract price, unless the City determines that a lesser amount would be adequate for the protection of the City.

2. The City may require additional performance bond protection when a contract price is increased. The increase in protection shall generally equal 100 percent of the increase in contract price. The City may secure additional protection by directing the Contractor to increase the penal amount of the existing bond or to obtain an additional bond.

(b) Payment bonds

1. The penal amount of the payment bonds shall equal:

(i) Fifty percent of the contract price if the contract price is not more than $1 million.

(ii) Forty percent of the contract price if the contract price is more than $1 million but not more than $5 million; or

(iii) Two and one half million if the contract price is more than $5 million.

2. If the original contract price is $5 million or less, the City may require additional protection as required by subparagraph 1 if the contract price is increased.

Performance and Payment Bonding Requirements (Non-Construction)

The Contractor may be required to obtain performance and payment bonds when necessary to protect the City's interest.

(a) The following situations may warrant a performance bond:

1. The City property or funds are to be provided to the Contractor for use in performing the contract or as partial compensation (as in retention of salvaged material).

2. A Contractor sells assets to or merges with another concern, and the City, after recognizing the latter concern as the successor in interest, desires assurance that it is financially capable.

3. Substantial progress payments are made before delivery of end items starts.

4. Contracts are for dismantling, demolition, or removal of improvements.

(b) When it is determined that a performance bond is required, the Contractor shall be required to obtain performance bonds as follows:

1. The penal amount of performance bonds shall be 100 percent of the original contract price, unless the City determines that a lesser amount would be adequate for the protection of the City.

2. The City may require additional performance bond protection when a contract price is increased. The increase in protection shall generally equal 100 percent of the increase in contract price. The City may secure additional protection by directing the Contractor to increase the penal amount of the existing bond or to obtain an additional bond.

(c) A payment bond is required only when a performance bond is required, and if the use of payment bond is in the City's interest.

(d) When it is determined that a payment bond is required, the Contractor shall be required to obtain payment bonds as follows:

1. The penal amount of payment bonds shall equal:

(i) Fifty percent of the contract price if the contract price is not more than $1 million;

(ii) Forty percent of the contract price if the contract price is more than $1 million

but not more than $5 million; or

(iii) Two and one half million if the contract price is increased.

Advance Payment Bonding Requirements

The Contractor may be required to obtain an advance payment bond if the contract contains an advance payment provision and a performance bond is not furnished. The City shall determine the amount of the advance payment bond necessary to protect the City.

Patent Infringement Bonding Requirements (Patent Indemnity)

The Contractor may be required to obtain a patent indemnity bond if a performance bond is not furnished and the financial responsibility of the Contractor is unknown or doubtful. The City shall determine the amount of the patent indemnity to protect the City.

Warranty of the Work and Maintenance Bonds

1. The Contractor warrants to the City, the Architect and/or Engineer that all materials and equipment furnished under this Contract will be of highest quality and new unless otherwise specified by the City, free from faults and defects and in conformance with the Contract Documents. All work not so conforming to these standards shall be considered defective. If required by the City, the Contractor shall furnish satisfactory evidence as to the kind and quality of materials and equipment.

2. The Work furnished must be of first quality and the workmanship must be the best obtainable in the various trades. The Work must be of safe, substantial and durable construction in all respects. The Contractor hereby guarantees the Work against defective materials or faulty workmanship for a minimum period of one (1) year after Final Payment by the City and shall replace or repair any defective materials or equipment or faulty workmanship during the period of the guarantee at no cost to the City. As additional security for these guarantees, the Contractor shall, prior to the release of Final Payment [as provided in Item X below], furnish separate Maintenance (or Guarantee) Bonds in form acceptable to the City written by the same corporate surety that provides the Performance Bond and Labor and Material Payment Bond for this Contract. These bonds shall secure the Contractor's obligation to replace or repair defective materials and faulty workmanship for a minimum period of one (1) year after Final Payment and shall be written in an amount equal to ONE HUNDRED PERCENT (100%) of the CONTRACT SUM, as adjusted (if at all).

15. CLEAN AIR (42 U.S.C. § 7606, 42 U.S.C. § 7401-7671, 40 CFR 15.61, 49 CFR Part 18)

(1) The Contractor agrees to comply with all applicable standards, orders or regulations issued pursuant to the Clean Air Act, as amended, 42 U.S.C. §§ 7401 et seq. The Contractor agrees to report each violation to

NYCDOT and understands and agrees that NYCDOT will, in turn, report each violation as required to assure notification to FTA and the appropriate EPA Regional Office.

(2) The Contractor also agrees to include these requirements in each subcontract exceeding $100,000 financed in whole or in part with Federal assistance provided by FTA.

16. RECYCLED PRODUCTS (42 U.S.C. 6962, 40 CFR Part 247)

The Contractor agrees to comply with all the requirements of Section 6002 of the Resource Conservation and Recovery Act (RCRA), as amended (42 U.S.C. 6962), including but not limited to the regulatory provisions of 40 CFR Part 247, as they apply to the procurement of the items designated in Subpart B of 40 CFR Part 247.

17. DAVIS-BACON AND COPELAND ANTI-KICKBACK ACTS

1) **Minimum wages** - (i) All laborers and mechanics employed or working upon the site of the work (or under the United States Housing Act of 1937 or under the Housing Act of 1949 in the construction or development of the project), will be paid unconditionally and not less often than once a week, and without subsequent deduction or rebate on any account (except such payroll deductions as are permitted by regulations issued by the Secretary of Labor under the Copeland Act (29 CFR Part 3)), the full amount of wages and bona fide fringe benefits (or cash equivalents thereof) due at time of payment computed at rates not less than those contained in the wage determination of the Secretary of Labor which is attached hereto and made a part hereof, regardless of any contractual relationship which may be alleged to exist between the contractor and such laborers and mechanics.

Contributions made or costs reasonably anticipated for bona fide fringe benefits under section 1(b)(2) of the Davis-Bacon Act on behalf of laborers or mechanics are considered wages paid to such laborers or mechanics, subject to the provisions of paragraph (1)(iv) of this section; also, regular contributions made or costs incurred for more than a weekly period (but not less often than quarterly) under plans, funds, or programs which cover the particular weekly period, are deemed to be constructively made or incurred during such weekly period. Such laborers and mechanics shall be paid the appropriate wage rate and fringe benefits on the wage determination for the classification of work actually performed, without regard to skill, except as provided in 29 CFR Part 5.5(a)(4). Laborers or mechanics performing work in more than one classification may be compensated at the rate specified for each classification for the time actually worked therein: provided, that the employer's payroll records accurately set forth the time spent in each classification in which work is performed. The wage determination (including any additional classifications and wage rates conformed under paragraph (1)(ii) of this section) and the Davis-Bacon poster (WH-1321) shall be posted at all times by the contractor and its subcontractors at the site of the work in a prominent and accessible place where it can be easily seen by the workers.

(ii)(A) The Contracting officer shall require that any class of laborers or mechanics, including helpers, which is not listed in the wage determination and which is to be employed under the contract shall be classified in conformance with the wage determination. The contracting officer shall approve an additional classification and wage rate and fringe benefits therefore only when the following criteria have been met:

(1) Except with respect to helpers as defined as 29 CFR 5.2(n)(4), the work to be performed by the classification requested is not performed by a classification in the wage determination; and

(2) The classification is utilized in the area by the construction industry; and

(3) The proposed wage rate, including any bona fide fringe benefits, bears a reasonable relationship to the wage rates contained in the wage determination; and

(4) With respect to helpers as defined in 29 CFR 5.2(n)(4), such a classification prevails in the area in which the work is performed.

(B) If the Contractor and the laborers and mechanics to be employed in the classification (if known), or their representatives, and the contracting officer agree on the classification and wage rate (including the amount designated for fringe benefits where appropriate), a report of the action taken shall be sent by the contracting officer to the Administrator of the Wage and Hour Division, Employment Standards Administration, U.S. Department of Labor, Washington, DC 20210. The Administrator, or an authorized representative, will approve, modify, or disapprove every additional classification action within 30 days of receipt and so advise the contracting officer or will notify the contracting officer within the 30-day period that additional time is necessary.

(C) In the event the Contractor, the laborers or mechanics to be employed in the classification or their representatives, and the contracting officer do not agree on the proposed classification and wage rate (including the amount designated for fringe benefits, where appropriate), the Contracting officer shall refer the questions, including the views of all interested parties and the recommendation of the contracting officer, to the Administrator for determination. The Administrator, or an authorized representative, will issue a determination within 30 days of receipt and so advise the contracting officer or will notify the contracting officer within the 30-day period that additional time is necessary.

(D) The wage rate (including fringe benefits where appropriate) determined pursuant to paragraphs (a)(1)(ii) (B) or (C) of this section, shall be paid to all workers performing work in the classification under this contract from the first day on which work is performed in the classification.

(iii) Whenever the minimum wage rate prescribed in the contract for a class of laborers or mechanics includes a fringe benefit which is not expressed as an hourly rate, the contractor shall either pay the benefit as stated in the wage determination or shall pay another bona fide fringe benefit or an hourly cash equivalent thereof.

(iv) If the Contractor does not make payments to a trustee or other third person, the contractor may consider as part of the wages of any laborer or mechanic the amount of any costs reasonably anticipated in providing bona fide fringe benefits under a plan or program, Provided, That the Secretary of Labor has found, upon the written request of the contractor, that the applicable standards of the Davis-Bacon Act have been met. The Secretary of Labor may require the Contractor to set aside in a separate account assets for the meeting of obligations under the plan or program.

(v)(A) The Contracting officer shall require that any class of laborers or mechanics which is not listed in the wage determination and which is to be employed under the contract shall be classified in conformance with the wage determination. The contracting officer shall approve an additional classification and wage rate and fringe benefits therefor only when the following criteria have been met:

(1) The work to be performed by the classification requested is not performed by a classification in the wage determination; and

(2) The classification is utilized in the area by the construction industry; and

(3) The proposed wage rate, including any bona fide fringe benefits, bears a reasonable relationship to the wage rates contained in the wage determination.

(B) If the Contractor and the laborers and mechanics to be employed in the classification (if known), or their representatives, and the contracting officer agree on the classification and wage rate (including the amount designated for fringe benefits where appropriate), a report of the action taken shall be sent by the contracting officer to the Administrator of the Wage and Hour Division, Employment Standards Administration, Washington, DC 20210. The Administrator, or an authorized representative, will approve, modify, or disapprove every additional classification action within 30 days of receipt and so advise the contracting officer or will notify the contracting officer within the 30-day period that additional time is necessary.

(C) In the event the Contractor, the laborers or mechanics to be employed in the classification or their representatives, and the contracting officer do not agree on the proposed classification and wage rate (including the amount designated for fringe benefits, where appropriate), the contracting officer shall refer the questions, including the views of all interested parties and the recommendation of the contracting officer, to the Administrator for determination. The Administrator, or an authorized representative, will issue a determination with 30 days of receipt and so advise the Contracting officer or will notify the Contracting officer within the 30-day period that additional time is necessary.

(D) The wage rate (including fringe benefits where appropriate) determined pursuant to paragraphs (a)(1)(v) (B) or (C) of this section, shall be paid to all workers performing work in the classification under this contract from the first day on which work is performed in the classification.

2) **Withholding** - The City shall upon its own action or upon written request of an authorized representative of the Department of Labor withhold or cause to be withheld from the Contractor under this contract or any other Federal contract with the same Contractor, or any other federally-assisted contract subject to Davis-Bacon prevailing wage requirements, which is held by the same Contractor, so much of the accrued payments or advances as may be considered necessary to pay laborers and mechanics, including apprentices, trainees, and helpers, employed by the contractor or any subcontractor the full amount of wages required by the contract. In the event of failure to pay any laborer or mechanic, including any apprentice, trainee, or helper, employed or working on the site of the work (or under the United States Housing Act of 1937 or under the Housing Act of 1949 in the construction or development of the project), all or part of the wages required by the contract, the City may, after written notice to the contractor, sponsor, applicant, or owner, take such action as may be necessary to cause the suspension of any further payment, advance, or guarantee of funds until such violations have ceased.

3) **Payrolls and basic records** - (i) Payrolls and basic records relating thereto shall be maintained by the contractor during the course of the work and preserved for a period of three years thereafter for all laborers and mechanics working at the site of the work (or under the United States Housing Act of 1937, or under the Housing Act of 1949, in the construction or development of the project). Such records shall contain the name, address, and social security number of each such worker, his or her correct classification, hourly rates of wages paid (including rates of contributions or costs anticipated for bona fide fringe benefits or cash equivalents thereof of the types described in section 1(b)(2)(B) of the Davis-Bacon Act), daily and weekly number of hours worked, deductions made and actual wages paid. Whenever the Secretary of Labor has found under 29 CFR 5.5(a)(1)(iv) that the wages of any laborer or mechanic include the amount of any costs reasonably anticipated in providing benefits under a plan or program described in section 1(b)(2)(B) of the Davis-Bacon Act, the contractor shall maintain records which show that the commitment to provide such benefits is enforceable, that the plan or program is financially responsible, and that the plan or program has been communicated in writing to the laborers or mechanics affected, and records which show the costs anticipated or the actual cost incurred in providing such benefits. Contractors employing apprentices or trainees under approved programs shall maintain written evidence of the registration of apprenticeship programs and certification of trainee programs, the registration of the apprentices and trainees, and the ratios and wage rates prescribed in the applicable programs.

(ii)(A) The contractor shall submit weekly for each week in which any contract work is performed a copy of all payrolls to the City for transmission to the Federal Transit Administration. The payrolls submitted shall set out accurately and completely all of the information required to be maintained under section 5.5(a)(3)(i) of Regulations, 29 CFR part 5. This information may be submitted in any form desired. Optional Form WH-347 is available for this purpose and may be purchased from the Superintendent of Documents (Federal Stock Number 029-005-00014-1), U.S. Government Printing Office, Washington, DC 20402. The Contractor is responsible for the submission of copies of payrolls by all subcontractors.

(B) Each payroll submitted shall be accompanied by a "Statement of Compliance," signed by the contractor or subcontractor or his or her agent who pays or supervises the payment of the persons employed under the contract and shall certify the following:

(1) That the payroll for the payroll period contains the information required to be maintained under section 5.5(a)(3)(i) of Regulations, 29 CFR part 5 and that such information is correct and complete;

(2) That each laborer or mechanic (including each helper, apprentice, and trainee) employed on the contract during the payroll period has been paid the full weekly wages earned, without rebate, either directly or indirectly, and that no deductions have been made either directly or indirectly from the full wages earned, other than permissible deductions as set forth in Regulations, 29 CFR part 3;

(3) That each laborer or mechanic has been paid not less than the applicable wage rates and fringe benefits or cash equivalents for the classification of work performed, as specified in the applicable wage determination incorporated into the contract.

(C) The weekly submission of a properly executed certification set forth on the reverse side of Optional Form WH-347 shall satisfy the requirement for submission of the "Statement of Compliance" required by paragraph (a)(3)(ii)(B) of this section.

(D) The falsification of any of the above certifications may subject the contractor or subcontractor to civil or criminal prosecution under section 1001 of title 18 and section 231 of title 31 of the United States Code.

(iii) The Contractor or subcontractor shall make the records required under paragraph (a)(3)(i) of this section available for inspection, copying, or transcription by authorized representatives of the Federal Transit Administration or the Department of Labor, and shall permit such representatives to interview employees during working hours on the job. If the Contractor or subcontractor fails to submit the required records or to make them available, the Federal agency may, after written notice to the Contractor, sponsor, applicant, or owner, take such action as may be necessary to cause the suspension of any further payment, advance, or guarantee of funds. Furthermore, failure to submit the required records upon request or to make such records available may be grounds for debarment action pursuant to 29 CFR 5.12.

4) **Apprentices and trainees** - (i) Apprentices - Apprentices will be permitted to work at less than the predetermined rate for the work they performed when they are employed pursuant to and individually registered in a bona fide apprenticeship program registered with the U.S. Department of Labor, Employment and Training Administration, Bureau of Apprenticeship and Training, or with a State Apprenticeship Agency recognized by the Bureau, or if a person is employed in his or her first 90 days of probationary employment as an apprentice in such an apprenticeship program, who is not individually registered in the program, but who has been certified by the Bureau of Apprenticeship and Training or a State Apprenticeship Agency (where appropriate) to be eligible for probationary employment as an apprentice. The allowable ratio of apprentices to journeymen on the job site in any craft classification shall not be greater than the ratio permitted to the Contractor as to the entire work force under the registered program. Any worker listed on a payroll at an apprentice wage rate, who is not registered or otherwise employed as stated above, shall be paid not less than the applicable wage rate on the wage determination for the classification of work actually performed. In addition, any apprentice performing work on the job site in excess of the ratio permitted under the registered program shall be paid not less than the applicable wage rate on the wage determination for the work actually performed. Where a contractor is performing construction on a project in a locality other than that in which its program is registered, the ratios and wage rates (expressed in percentages of the journeyman's hourly rate) specified in the Contractor's or subcontractor's registered program shall be observed. Every apprentice must be paid at not less than the rate specified in the registered program for the apprentice's level of progress, expressed as a percentage of the journeymen hourly rate specified in the applicable wage determination. Apprentices shall be paid fringe benefits in accordance with the provisions of the apprenticeship program. If the apprenticeship program does not specify fringe benefits, apprentices must be paid the full amount of fringe benefits listed on the wage determination for the applicable classification. If the Administrator of the Wage and Hour Division of the U.S. Department of Labor determines that a different practice prevails for the applicable apprentice classification, fringes shall be paid in accordance with that determination. In the event the Bureau of Apprenticeship and Training, or a State Apprenticeship Agency recognized by the Bureau, withdraws approval of an apprenticeship program, the contractor will no longer be

permitted to utilize apprentices at less than the applicable predetermined rate for the work performed until an acceptable program is approved.

(ii) Trainees - Except as provided in 29 CFR 5.16, trainees will not be permitted to work at less than the predetermined rate for the work performed unless they are employed pursuant to and individually registered in a program which has received prior approval, evidenced by formal certification by the U.S. Department of Labor, Employment and Training Administration. The ratio of trainees to journeymen on the job site shall not be greater than permitted under the plan approved by the Employment and Training Administration. Every trainee must be paid at not less than the rate specified in the approved program for the trainee's level of progress, expressed as a percentage of the journeyman hourly rate specified in the applicable wage determination. Trainees shall be paid fringe benefits in accordance with the provisions of the trainee program. If the trainee program does not mention fringe benefits, trainees shall be paid the full amount of fringe benefits listed on the wage determination unless the Administrator of the Wage and Hour Division determines that there is an apprenticeship program associated with the corresponding journeyman wage rate on the wage determination which provides for less than full fringe benefits for apprentices. Any employee listed on the payroll at a trainee rate who is not registered and participating in a training plan approved by the Employment and Training Administration shall be paid not less than the applicable wage rate on the wage determination for the classification of work actually performed. In addition, any trainee performing work on the job site in excess of the ratio permitted under the registered program shall be paid not less than the applicable wage rate on the wage determination for the work actually performed. In the event the Employment and Training Administration withdraws approval of a training program, the contractor will no longer be permitted to utilize trainees at less than the applicable predetermined rate for the work performed until an acceptable program is approved.

(iii) Equal employment opportunity - The utilization of apprentices, trainees and journeymen under this part shall be in conformity with the equal employment opportunity requirements of Executive Order 11246, as amended, and 29 CFR part 30.

5) **Compliance with Copeland Act requirements** - The Contractor shall comply with the requirements of 29 CFR Part 3, which are incorporated by reference in this contract.

6) **Subcontracts** - The Contractor or subcontractor shall insert in any subcontracts the clauses contained in 29 CFR 5.5(a)(1) through (10) and such other clauses as the Federal Transit Administration may by appropriate instructions require, and also a clause requiring the subcontractors to include these clauses in any lower tier subcontracts. The Contractor shall be responsible for the compliance by any subcontractor or lower tier subcontractor with all the contract clauses in 29 CFR 5.5.

7) **Contract termination: debarment** - A breach of the contract clauses in 29 CFR 5.5 may be grounds for termination of the contract, and for debarment as a contractor and a subcontractor as provided in 29 CFR 5.12.

8) **Compliance with Davis-Bacon and Related Act requirements** - All rulings and interpretations of the Davis-Bacon and Related Acts contained in 29 CFR parts 1, 3, and 5 are herein incorporated by reference in this contract.

9) **Disputes concerning labor standards** - Disputes arising out of the labor standards provisions of this contract shall not be subject to the general disputes clause of this contract. Such disputes shall be resolved in accordance with the procedures of the Department of Labor set forth in 29 CFR parts 5, 6, and 7. Disputes within the meaning of this clause include disputes between the contractor (or any of its subcontractors) and the contracting agency, the U.S. Department of Labor, or the employees or their representatives.

10) **Certification of eligibility** - (i) By entering into this contract, the Contractor certifies that neither it (nor he or she) nor any person or firm who has an interest in the contractor's firm is a person or firm ineligible to be awarded Government contracts by virtue of section 3(a) of the Davis-Bacon Act or 29 CFR 5.12(a)(1).

(ii) No part of this contract shall be subcontracted to any person or firm ineligible for award of a Government contract by virtue of section 3(a) of the Davis-Bacon Act or 29 CFR 5.12(a)(1).

(iii) The penalty for making false statements is prescribed in the U.S. Criminal Code, 18 U.S.C. 1001.

18. CONTRACT WORK HOURS AND SAFETY STANDARDS ACT

(1) **Overtime requirements** - No contractor or subcontractor contracting for any part of the contract work which may require or involve the employment of laborers or mechanics shall require or permit any such laborer or mechanic in any workweek in which he or she is employed on such work to work in excess of forty hours in such workweek unless such laborer or mechanic receives compensation at a rate not less than one and one-half times the basic rate of pay for all hours worked in excess of forty hours in such workweek.

(2) **Violation; liability for unpaid wages; liquidated damages** - In the event of any violation of the clause set forth in paragraph (1) of this section the Contractor and any Subcontractor responsible therefor shall be liable for the unpaid wages. In addition, such Contractor and Subcontractor shall be liable to the United States for liquidated damages. Such liquidated damages shall be computed with respect to each individual laborer or mechanic, including watchmen and guards, employed in violation of the clause set forth in paragraph (1) of this section, in the sum of $10 for each calendar day on which such individual was required or permitted to work in excess of the standard workweek of forty hours without payment of the overtime wages required by the clause set forth in paragraph (1) of this section.

(3) **Withholding for unpaid wages and liquidated damages** – The City shall upon its own action or upon written request of an authorized representative of the Department of Labor withhold or cause to be withheld, from any moneys payable on account of work performed by the Contractor or Subcontractor under any such contract or any other Federal contract with the same Contractor, or any other federally-assisted contract subject to the Contract Work Hours and Safety Standards Act, which is held by the same Contractor, such sums as may be determined to be necessary to satisfy any liabilities of such Contractor or Subcontractor for unpaid wages and liquidated damages as provided in the clause set forth in paragraph (2) of this section.

(4) **Subcontracts** - The Contractor or Subcontractor shall insert in any subcontracts the clauses set forth in paragraphs (1) through (4) of this section and also a clause requiring the subcontractors to include these clauses in any lower tier subcontracts. The Contractor shall be responsible for compliance by any Subcontractor or lower tier Subcontractor with the clauses set forth in paragraphs (1) through (4) of this section.

19. NO GOVERNMENT OBLIGATION TO THIRD PARTIES

No Obligation by the Federal Government

(1) The City and the Contractor acknowledge and agree that, notwithstanding any concurrence by the Federal Government in or approval of the solicitation or award of the underlying contract, absent the express written consent by the Federal Government, the Federal Government is not a party to this contract and shall not be subject to any obligations or liabilities to the City, Contractor, or any other party (whether or not a party to that contract) pertaining to any matter resulting from the underlying contract.

(2) The Contractor agrees to include the above clause in each subcontract financed in whole or in part with Federal assistance provided by FTA. It is further agreed that the clause shall not be modified, except to identify the Subcontractor who will be subject to its provisions.

20. PROGRAM FRAUD AND FALSE OR FRAUDULENT STATEMENTS AND RELATED ACTS (31 U.S.C 3801 et seq., 49 CFR Part 31, 18 U.S.C. 1001, 49 U.S.C. 5323(l))

(1) The Contractor acknowledges that the provisions of the Program Fraud Civil Remedies Act of 1986, as amended, 31 U.S.C. § 3801 et seq. and U.S. DOT regulations, "Program Fraud Civil Remedies," 49 C.F.R. Part 31, apply to its actions pertaining to this Project. Upon execution of the underlying contract, the Contractor certifies or affirms the truthfulness and accuracy of any statement it has made, it makes, it may make, or causes to be made, pertaining to the underlying contract or the FTA assisted project for which this contract work is being performed. In addition to other penalties that may be applicable, the Contractor further acknowledges that if it makes, or causes to be made, a false, fictitious, or fraudulent claim, statement, submission, or certification, the Federal Government reserves the right to impose the penalties of the Program Fraud Civil Remedies Act of 1986 on the Contractor to the extent the Federal Government deems appropriate.

(2) The Contractor also acknowledges that if it makes, or causes to be made, a false, fictitious, or fraudulent claim, statement, submission, or certification to the Federal Government under a contract connected with a project that is financed in whole or in part with Federal assistance originally awarded by FTA under the authority of 49 U.S.C. chapter 53 or any other Federal law, the Federal Government reserves the right to impose on the contractor the penalties of 49 U.S.C. 5323(l), 18 U.S.C. § 1001, or other applicable federal law to the extent the Federal Government deems appropriate.

(3) The Contractor agrees to include the above two clauses in each subcontract financed in whole or in part with Federal assistance provided by FTA. It is further agreed that the clauses shall not be modified, except to identify the subcontractor who will be subject to the provisions.

21. TERMINATION (49 U.S.C. Part 18, FTA Circular 4220.1F)

The Contractor agrees to include these provisions in all subcontracts in excess of $10,000.

a. Termination for Convenience (General Provision) - The City may terminate this contract, in whole or in part, at any time by written notice to the Contractor when it is in the City's best interest. The Contractor shall be paid its costs, including contract close-out costs, and profit on work performed up to the time of termination. The Contractor shall promptly submit its termination claim to the City to be paid to the Contractor. If the Contractor has any property in its possession belonging to the City, the Contractor will account for the same, and dispose of it in the manner the City directs.

b. Termination for Default [Breach or Cause] (General Provision) - If the Contractor does not deliver supplies in accordance with the contract delivery schedule, or, if the contract is for services and the Contractor fails to perform in the manner called for in the contract, or if the Contractor fails to comply with any other provisions of the contract, the City may terminate this contract for default. Termination shall be effected by serving a notice of termination on the contractor setting forth the manner in which the Contractor is in default. The Contractor will only be paid the contract price for supplies delivered and accepted, or services performed in accordance with the manner of performance set forth in the contract.

If it is later determined by the City that the Contractor had an excusable reason for not performing, such as a strike, fire, or flood, events which are not the fault of or are beyond the control of the Contractor, the City, after setting up a new delivery of performance schedule, may allow the Contractor to continue work, or treat the termination as a termination for convenience.

c. Opportunity to Cure (General Provision) - The City, in its sole discretion may, in the case of a termination for breach or default, allow the Contractor [an appropriately short period of time] in which to cure the defect. In such case, the notice of termination will state the time period in which cure is permitted and other appropriate conditions.

If Contractor fails to remedy to the City's satisfaction the breach or default or any of the terms, covenants, or conditions of this Contract within the period of time specified by the City after receipt by Contractor or written notice from the City setting forth the nature of said breach or default, the City shall have the right to terminate the

Contract without any further obligation to Contractor. Any such termination for default shall not in any way operate to preclude the City from also pursuing all available remedies against Contractor and its sureties for said breach or default.

d. Waiver of Remedies for any Breach - In the event that the City elects to waive its remedies for any breach by Contractor of any covenant, term or condition of this Contract, such waiver by the City shall not limit the City's remedies for any succeeding breach of that or of any other term, covenant, or condition of this Contract.

e. Termination for Convenience (Professional or Transit Service Contracts) - The City, by written notice, may terminate this contract, in whole or in part, when it is in the Government's interest. If this contract is terminated, the City shall be liable only for payment under the payment provisions of this contract for services rendered before the effective date of termination.

f. Termination for Default (Supplies and Service) - If the Contractor fails to deliver supplies or to perform the services within the time specified in this contract or any extension or if the Contractor fails to comply with any other provisions of this contract, the City may terminate this contract for default. The City shall terminate by delivering to the Contractor a Notice of Termination specifying the nature of the default. The Contractor will only be paid the contract price for supplies delivered and accepted, or services performed in accordance with the manner or performance set forth in this contract.

If, after termination for failure to fulfill contract obligations, it is determined that the Contractor was not in default, the rights and obligations of the parties shall be the same as if the termination had been issued for the convenience of the City.

g. Termination for Default (Transportation Services) - If the Contractor fails to pick up the commodities or to perform the services, including delivery services, within the time specified in this contract, or any extension thereto, or if the Contractor fails to comply with any other provisions of this contract, the City may terminate this contract for default. The City shall terminate by delivering to the Contractor a Notice of Termination specifying the nature of default. The Contractor will only be paid the contract price for services performed in accordance with the manner of performance set forth in this contract.

h. Termination for Default (Construction) If the Contractor refuses or fails to prosecute the work or any separable part, with the diligence that will insure its completion within the time specified in this contract or any extension or fails to complete the work within this time, or if the Contractor fails to comply with any other provisions of this contract, the City may terminate this contract for default. the City shall terminate by delivering to the Contractor a Notice of Termination specifying the nature of the default. In this event, the City may take over the work and complete it by contract or otherwise, and may take possession of and use any materials, appliances, and plant on the work site necessary for completing the work. The Contractor and its sureties shall be liable for any damage to the City resulting from the Contractor's refusal or failure to complete the work within specified time, whether or not the Contractor's right to proceed with the work is terminated. This liability includes any increased costs incurred by the City in completing the work.

The Contractor's right to proceed shall not be terminated nor the Contractor charged with damages under this clause if:

1. the delay in completing the work arises from unforeseeable causes beyond the control and without the fault or negligence of the Contractor. Examples of such causes include: acts of God, acts of the City, acts of another Contractor in the performance of a contract with the City, epidemics, quarantine restrictions, strikes, freight embargoes; and

2. the Contractor, within [10] days from the beginning of any delay, notifies the City in writing of the causes of delay. If in the judgment of the City, the delay is excusable, the time for completing the work shall be extended.

The judgment of the City shall be final and conclusive on the parties, but subject to appeal under the Disputes clauses.

If, after termination of the Contractor's right to proceed, it is determined that the Contractor was not in default, or that the delay was excusable, the rights and obligations of the parties will be the same as if the termination had been issued for the convenience of the City.

i. Termination for Convenience of Default (Cost-Type Contracts) -The City may terminate this contract, or any portion of it, by serving a notice or termination to the Contractor. The notice shall state whether the termination is for convenience of the City or for the default of the Contractor. If the termination is for default, the notice shall state the manner in which the contractor has failed to perform the requirements of the contract. The Contractor shall account for any property in its possession paid for from funds received from the City, or property supplied to the Contractor by the City. If the termination is for default, the City may fix the fee, if the contract provides for a fee, to be paid the contractor in proportion to the value, if any, of work performed up to the time of termination. The Contractor shall promptly submit its termination claim to the City and the parties shall negotiate the termination settlement to be paid the Contractor.

If the termination is for the convenience of the City, the Contractor shall be paid its contract close-out costs, and a fee, if the contract provided for payment of a fee, in proportion to the work performed up to the time of termination.

If, after serving a notice of termination for default, the City determines that the Contractor has an excusable reason for not performing, such as strike, fire, flood, events which are not the fault of and are beyond the control of the contractor, the City, after setting up a new work schedule, may allow the Contractor to continue work, or treat the termination as a termination for convenience.

22. GOVERNMENT-WIDE DEBARMENT AND SUSPENSION (NON-PROCUREMENT) (2 C.F.R. part 180, 2 C.F.R. part 1200, Executive Orders 12549/12689)

Suspension and Debarment - The Contractor agrees to comply, and assures the compliance of each subcontractor, lessee, third party contractor, or other participant at any tier of the Project, with Executive Orders Nos. 12549 and 12689, "Debarment and Suspension," 31 U.S.C. § 6101 note, and U.S. DOT regulations, "Nonprocurement Suspension and Debarment," 2 C.F.R. Part 1200, which adopts and supplements the provisions of U.S. Office of Management and Budget (U.S. OMB) "Guidelines to Agencies on Government-wide Debarment and Suspension (Nonprocurement)," 2 C.F.R. Part 180. The Contractor agrees to, and assures that its subcontractors, lessees, third party contractors, and other participants at any tier of the Project will, review the "Excluded Parties Listing System" at http://www.sam.gov/portal/public/SAM/ before entering into any subagreement, lease, third party contract, or other arrangement in connection with the Project.

By signing and submitting its bid or proposal, the bidder or proposer certifies as follows:

The certification in this clause is a material representation of fact relied upon by the City. If it is later determined that the bidder or proposer knowingly rendered an erroneous certification, in addition to remedies available to the City, the Federal Government may pursue available remedies, including but not limited to suspension and/or debarment. The bidder or proposer agrees to comply with the requirements of Executive Orders Nos. 12549 and 12689, "Debarment and Suspension," 31 U.S.C. § 6101 note, and U.S. DOT regulations, "Nonprocurement Suspension and Debarment," 2 C.F.R. Part 1200, which adopts and supplements the provisions of U.S. Office of Management and Budget (U.S. OMB) "Guidelines to Agencies on Government-wide Debarment and Suspension (Nonprocurement)," 2 C.F.R. Part 180, while this offer is valid and throughout the period of any contract that may arise from this offer. The bidder or proposer further agrees to include a provision requiring such compliance in its lower tier covered transactions.

23. PRIVACY ACT (5 U.S.C. 552)

The following requirements apply to the Contractor and its employees that administer any system of records on behalf of the Federal Government under any contract:

(1) The Contractor agrees to comply with, and assures the compliance of its employees with, the information restrictions and other applicable requirements of the Privacy Act of 1974, 5 U.S.C. § 552a. Among other things, the Contractor agrees to obtain the express consent of the Federal Government before the Contractor or its employees operate a system of records on behalf of the Federal Government. The Contractor understands that the requirements of the Privacy Act, including the civil and criminal penalties for violation of that Act, apply to those individuals involved, and that failure to comply with the terms of the Privacy Act may result in termination of the underlying contract.

(2) The Contractor also agrees to include these requirements in each subcontract to administer any system of records on behalf of the Federal Government financed in whole or in part with Federal assistance provided by FTA.

24. CIVIL RIGHTS REQUIREMENTS (29 U.S.C. 623, 42 U.S.C. 2000, 42 U.S.C. § 6101 et seq., 42 U.S.C. 12112, 42 U.S.C. § 12101 et seq., 49 U.S.C. § 5332, 29 CFR Part 1630, 41 CFR Part 60 et seq.)

(1) Nondiscrimination - In accordance with Title VI of the Civil Rights Act, as amended, 42 U.S.C. § 2000d, section 303 of the Age Discrimination Act of 1975, as amended, 42 U.S.C. § 6101 et seq., section 202 of the Americans with Disabilities Act of 1990, 42 U.S.C. § 12101 et seq., and Federal transit law at 49 U.S.C. § 5332, the Contractor agrees that it will not discriminate against any employee or applicant for employment because of race, color, creed, national origin, sex, age, or disability. In addition, the Contractor agrees to comply with applicable Federal implementing regulations and other implementing requirements FTA may issue.

(2) Equal Employment Opportunity – The following equal employment opportunity requirements apply to the underlying contract:

(a) Race, Color, Creed, National Origin, Sex - In accordance with Title VII of the Civil Rights Act, as amended, 42 U.S.C. § 2000e, and Federal transit laws at 49 U.S.C. § 5332, the Contractor agrees to comply with all applicable equal employment opportunity requirements of U.S. Department of Labor (U.S. DOL) regulations, "Office of Federal Contract Compliance Programs, Equal Employment Opportunity, Department of Labor," 41 C.F.R. Parts 60 et seq., (which implement Executive Order No. 11246, "Equal Employment Opportunity," as amended by Executive Order No. 11375, "Amending Executive Order 11246 Relating to Equal Employment Opportunity," 42 U.S.C. § 2000e note and as further amended by Executive Order 13672), and with any applicable Federal statutes, executive orders, regulations, and Federal policies that may in the future affect construction activities undertaken in the course of the Project. The Contractor agrees to take affirmative action to ensure that applicants are employed, and that employees are treated during employment, without regard to their race, color, creed, national origin, disability, sex, gender identity, age, or status as a parent. Such action shall include, but not be limited to, the following: employment, upgrading, demotion or transfer, recruitment or recruitment advertising, layoff or termination; rates of pay or other forms of compensation; and selection for training, including apprenticeship. In addition, the Contractor agrees to comply with any implementing requirements FTA may issue.

(b) Age - In accordance with The Age Discrimination Act of 1975, as amended, 42 U.S.C. §§ 6101 et seq., and with implementing U.S. Health and Human Services regulations, "Nondiscrimination on the Basis of Age in Programs or Activities Receiving Federal Financial Assistance," 45 C.F.R. Part 90, Section 4 of the Age Discrimination in Employment Act, as amended, 29 U.S.C. § §621 through 634, and 29 CFR Part 1625, the Contractor agrees to refrain from discrimination against present and prospective employees for reason of age. In addition, the Contractor agrees to comply with any implementing requirements FTA may issue.

(c) Disabilities – In accordance with 49 U.S.C. § 5301(d), which states the Federal policy that elderly individuals and individuals with disabilities have the same right as other individuals to use public transportation services and facilities, and that special efforts shall be made in planning and designing those services and facilities to implement transportation accessibility rights for elderly individuals and individuals with disabilities. The Contractor shall also agree to comply with all applicable provisions of Section 504 of the Rehabilitation Act of 1973, as amended, with 29 U.S.C. § 794, which prohibits discrimination on the basis of disability; with the Americans with Disabilities Act of 1990 (ADA), as amended, 42 U.S.C. §§ 12101 *et seq.*, which requires that accessible facilities and services be made available to individuals with disabilities; and with the Architectural Barriers Act of 1968, as amended, 42 U.S.C. §§ 4151 *et seq.*, which requires that buildings and public accommodations be accessible to individuals with disabilities, and any subsequent amendments to these laws or other laws pertaining to access for individuals with disabilities to the extent applicable. In addition, the Contractor agrees to comply with applicable implementing Federal regulations and directives and any subsequent amendments that the FTA may issue.

(d) Limited English Proficiency (LEP) - Executive Order No. 13166, "Improving Access to Services for Persons with Limited English Proficiency," August 11, 2000, 42 U.S.C. Section 2000d-1 note, and USDOT/FTA , "Policy Guidance Concerning Recipients' Responsibilities to Limited English Proficient (LEP) Persons," December 14, 2005. Contractors will comply, based on in receipt of Federal funding through the City and assisting the City in fulfilling its responsibilities to LEP persons, pursuant to Title VI of the Civil Rights Act of 1964 and implementing regulations in accordance to FTA Circular 4702.1.

(3) The Contractor also agrees to include these requirements in each subcontract financed in whole or in part with Federal assistance provided by FTA, modified only if necessary to identify the affected parties.

25. BREACHES AND DISPUTE RESOLUTION (49 CFR Part 18, FTA Circular 4220.1F)

Disputes - Disputes arising in the performance of this Contract which are not resolved by agreement of the parties shall be decided in writing by the authorized representative of the City. This decision shall be final and conclusive unless within ten (10) days from the date of receipt of its copy, the Contractor mails or otherwise furnishes a written appeal to the [title of employee]. In connection with any such appeal, the Contractor shall be afforded an opportunity to be heard and to offer evidence in support of its position. The decision of the [title of employee] shall be binding upon the Contractor and the Contractor shall abide by the decision.

Performance During Dispute - Unless otherwise directed by the City, Contractor shall continue performance under this Contract while matters in dispute are being resolved.

Claims for Damages - Should either party to the Contract suffer injury or damage to person or property because of any act or omission of the party or of any of his employees, agents or others for whose acts he is legally liable, a claim for damages therefore shall be made in writing to such other party within a reasonable time after the first observance of such injury of damage.

Remedies - Unless this contract provides otherwise, all claims, counterclaims, disputes and other matters in question between the City and the Contractor arising out of or relating to this agreement or its breach will be decided by arbitration if the parties mutually agree, or in a court of competent jurisdiction within the State in which the City is located.

Rights and Remedies - The duties and obligations imposed by the Contract Documents and the rights and remedies available there under shall be in addition to and not a limitation of any duties, obligations, rights and remedies otherwise imposed or available by law. No action or failure to act by the City or Contractor shall constitute a waiver of any right or duty afforded any of them under the Contract, nor shall any such action or failure to act constitute an approval of or acquiescence in any breach there under, except as may be specifically agreed in writing.

26. PATENT AND RIGHTS IN DATA (35 U.S.C. § 200 et seq., 37 CFR Part 401, 49 CFR Parts 18 / 19)

A. **Rights in Data** - The following requirements apply to each contract involving experimental, developmental or research work:

(1) The term "subject data" used in this clause means recorded information, whether or not copyrighted, that is delivered or specified to be delivered under the contract. The term includes graphic or pictorial delineation in media such as drawings or photographs; text in specifications or related performance or design-type documents; machine forms such as punched cards, magnetic tape, or computer memory printouts; and information retained in computer memory. Examples include, but are not limited to: computer software, engineering drawings and associated lists, specifications, standards, process sheets, manuals, technical reports, catalog item identifications, and related information. The term "subject data" does not include financial reports, cost analyses, and similar information incidental to contract administration.

(2) The following restrictions apply to all subject data first produced in the performance of the contract to which this Attachment has been added:

(a) Except for its own internal use, the Purchaser or Contractor may not publish or reproduce subject data in whole or in part, or in any manner or form, nor may the Purchaser or Contractor authorize others to do so, without the written consent of the Federal Government, until such time as the Federal Government may have either released or approved the release of such data to the public; this restriction on publication, however, does not apply to any contract with an academic institution.

(b) In accordance with 49 C.F.R. § 18.34 and 49 C.F.R. § 19.36, the Federal Government reserves a royalty-free, non-exclusive and irrevocable license to reproduce, publish, or otherwise use, and to authorize others to use, for "Federal Government purposes," any subject data or copyright described in subsections (2)(b)1 and (2)(b)2 of this clause below. As used in the previous sentence, "for Federal Government purposes," means use only for the direct purposes of the Federal Government. Without the copyright owner's consent, the Federal Government may not extend its Federal license to any other party.

1. Any subject data developed under that contract, whether or not a copyright has been obtained; and

2. Any rights of copyright purchased by the Purchaser or Contractor using Federal assistance in whole or in part provided by FTA.

(c) When FTA awards Federal assistance for experimental, developmental, or research work, it is FTA's general intention to increase transportation knowledge available to the public, rather than to restrict the benefits resulting from the work to participants in that work. Therefore, unless FTA determines otherwise, the Purchaser and the Contractor performing experimental, developmental, or research work required by the underlying contract to which this Attachment is added agrees to permit FTA to make available to the public, either FTA's license in the copyright to any subject data developed in the course of that contract, or a copy of the subject data first produced under the contract for which a copyright has not been obtained. If the experimental, developmental, or research work, which is the subject of the underlying contract, is not completed for any reason whatsoever, all data developed under that contract shall become subject data as defined in subsection (a) of this clause and shall be delivered as the Federal Government may direct. This subsection (c), however, does not apply to adaptations of automatic data processing equipment or programs for the Purchaser or Contractor's use whose costs are financed in whole or in part with Federal assistance provided by FTA for transportation capital projects.

(d) Unless prohibited by state law, upon request by the Federal Government, the Purchaser and the Contractor agree to indemnify, save, and hold harmless the Federal Government, its officers, agents, and employees acting within the scope of their official duties against any liability, including costs and expenses, resulting

from any willful or intentional violation by the Purchaser or Contractor of proprietary rights, copyrights, or right of privacy, arising out of the publication, translation, reproduction, delivery, use, or disposition of any data furnished under that contract. Neither the Purchaser nor the Contractor shall be required to indemnify the Federal Government for any such liability arising out of the wrongful act of any employee, official, or agents of the Federal Government.

(e) Nothing contained in this clause on rights in data shall imply a license to the Federal Government under any patent or be construed as affecting the scope of any license or other right otherwise granted to the Federal Government under any patent.

(f) Data developed by the Purchaser or Contractor and financed entirely without using Federal assistance provided by the Federal Government that has been incorporated into work required by the underlying contract to which this Attachment has been added is exempt from the requirements of subsections (b), (c), and (d) of this clause, provided that the Purchaser or Contractor identifies that data in writing at the time of delivery of the contract work.

(g) Unless FTA determines otherwise, the Contractor agrees to include these requirements in each subcontract for experimental, developmental, or research work financed in whole or in part with Federal assistance provided by FTA.

(3) Unless the Federal Government later makes a contrary determination in writing, irrespective of the Contractor's status (i.e., a large business, small business, state government or state instrumentality, local government, nonprofit organization, institution of higher education, individual, etc.), the Purchaser and the Contractor agree to take the necessary actions to provide, through FTA, those rights in that invention due the Federal Government as described in U.S. Department of Commerce regulations, "Rights to Inventions Made by Nonprofit Organizations and Small Business Firms Under Government Grants, Contracts and Cooperative Agreements," 37 C.F.R. Part 401.

(4) The Contractor also agrees to include these requirements in each subcontract for experimental, developmental, or research work financed in whole or in part with Federal assistance provided by FTA.

B. **Patent Rights** - The following requirements apply to each contract involving experimental, developmental, or research work:

(1) General - If any invention, improvement, or discovery is conceived or first actually reduced to practice in the course of or under the contract to which this Attachment has been added, and that invention, improvement, or discovery is patentable under the laws of the United States of America or any foreign country, the Purchaser and Contractor agree to take actions necessary to provide immediate notice and a detailed report to the party at a higher tier until FTA is ultimately notified.

(2) Unless the Federal Government later makes a contrary determination in writing, irrespective of the Contractor's status (a large business, small business, state government or state instrumentality, local government, nonprofit organization, institution of higher education, individual), the Purchaser and the Contractor agree to take the necessary actions to provide, through FTA, those rights in that invention due the Federal Government as described in 35 U.S.C. § 200 et seq., and in U.S. Department of Commerce regulations, "Rights to Inventions Made by Nonprofit Organizations and Small Business Firms Under Government Grants, Contracts and Cooperative Agreements," 37 C.F.R. Part 401.

(3) The Contractor also agrees to include the requirements of this clause in each subcontract for experimental, developmental, or research work financed in whole or in part with Federal assistance provided by FTA

27. PUBLIC TRANSPORTATION EMPLOYEE PROTECTIVE ARRANGEMENTS – Applicability – Contracts for transit operations except micro-purchases ($3,000 or less, except for construction contracts over

$2,000)

(1) Contractor shall comply with applicable transit employee protective requirements as follows:

(a) General Transit Employee Protective Requirements - To the extent that FTA determines that transit operations are involved, the Contractor agrees to carry out the transit operations work on the underlying contract in compliance with terms and conditions determined by the U.S. Secretary of Labor to be fair and equitable to protect the interests of employees employed under this contract and to meet the employee protective requirements of 49 U.S.C. § 5333(b), and U.S. DOL guidelines at 29 CFR Part 215, and any amendments thereto. These terms and conditions are identified in the letter of certification from the U.S. DOL to FTA applicable to the FTA Recipient's project from which Federal assistance is provided to support work on the underlying contract. The Contractor agrees to carry out that work in compliance with the conditions stated in that U.S. DOL letter.

(2) Contractor shall also include any applicable requirements in each subcontract involving transit operations financed in whole or in part with FTA assistance.

28. PRE-EMPTION OF STATE, TERRITORIAL, AND LOCAL LAW

If a Federal law pre-empts a State, territorial, or local law, regulation, or ordinance:

(a) The Subrecipient or Contractor must comply with Federal law and regulations.

(b) This Agreement, however, does not require the Subrecipient or Contractor to take any action that would violate State, territorial, or local law, regulations, or ordinances.

(c) If compliance with any provision of Federal law or regulations or this Agreement violates or would require the Subrecipient or Contractor to violate any State, territorial, or local law, regulation, or ordinance, the Subrecipient or Contractor agrees to:

(1) Notify New York City Department of Design and Construction (NYCDDC) immediately in writing, and

(2) Make appropriate arrangements with NYCDDC to:

a. Proceed with the Project or,

b. Terminate the Project expeditiously, if necessary.

29. DISADVANTAGED BUSINESS ENTERPRISE (DBE) (Section 1101(b) of MAP-21, 23 U.S.C. § 101 note; 49 CFR Part 26)

a. This contract is subject to the requirements of Title 49, Code of Federal Regulations, Part 26, *Participation by Disadvantaged Business Enterprises in Department of Transportation Financial Assistance Programs.* The national goal for participation of Disadvantaged Business Enterprises (DBE) is 10%. The agency's overall goal for DBE participation is **11.4%.** The FTA DBE goal for architectural and engineering services is 11%, and a general construction contract is 13%. The DBE goal is 3% for marine contracts.

b. The contractor shall not discriminate on the basis of race, color, national origin, or sex in the performance of this contract. The contractor shall carry out applicable requirements of 49 CFR Part 26 in the award and administration of this DOT-assisted contract. Failure by the contractor to carry out these requirements is a material breach of this contract, which may result in the termination of this contract or such other remedy as **the City** deems appropriate. Each subcontract the contractor signs with a subcontractor must include the

assurance in this paragraph (see 49 CFR 26.13(b)).

Bidders/offerors are required to document sufficient DBE participation to meet these goals or, alternatively, document adequate good faith efforts to do so, as provided for in 49 CFR 26.53. Award of this contract is conditioned on submission of the following:

1. The names and addresses of DBE firms that will participate in this contract;

2. A description of the work each DBE will perform;

3. The dollar amount of the participation of each DBE firm participating;

4. Written documentation of the bidder/offeror's commitment to use a DBE subcontractor whose participation it submits to meet the contract goal;

5. Written confirmation from the DBE that it is participating in the contract as provided in the Contractor's commitment;

6. If the contract goal is not met, evidence of good faith efforts should be provided by the City. The successful bidder/offeror will be required to report its DBE participation obtained through race-neutral means throughout the period of performance;

7. The Contractor is required to pay its Subcontractors performing work related to this contract for satisfactory performance of that work no later than 30 days after the Contractor's receipt of payment for that work from the City. In addition, the Contractor may not hold retainage from its Subcontractors. The Contractor is required to return any retainage payments to those subcontractors within 30 days after the subcontractor's work related to this contract is satisfactorily completed. The Contractor is required to return any retainage payments to those Subcontractors within 30 days after incremental acceptance of the Subcontractor's work by the City and Contractor's receipt of the partial retainage payment related to the Subcontractor's work; and

8. The Contractor must promptly notify the City, whenever a DBE Subcontractor performing work related to this contract is terminated or fails to complete its work, and must make good faith efforts to engage another DBE Subcontractor to perform at least the same amount of work. The Contractor may not terminate any DBE Subcontractor and perform that work through its own forces or those of an affiliate without prior written consent of the City.

30. INCORPORATION OF FEDERAL TRANSIT ADMINISTRATION (FTA) TERMS (FTA CIRCULAR 4220.1F)

The preceding provisions include, in part, certain Standard Terms and Conditions required by USDOT, whether or not expressly set forth in the preceding contract provisions. All contractual provisions required by USDOT, as set forth in FTA Circular 4220.1F are hereby incorporated by reference. Anything to the contrary herein notwithstanding, all FTA mandated terms shall be deemed to control in the event of a conflict with other provisions contained in this Contract. The Contractor shall not perform any act, fail to perform any act, or refuse to comply with any of the City's requests which would cause the City to be in violation of the FTA terms and conditions.

31. DRUG AND ALCOHOL TESTING (49 U.S.C. 5331, 49 CFR Part 655)

FTA's drug and alcohol rules, 49 CFR 655, respectively, are unique among the regulations issued by FTA. First, they require that the City ensures that any entity performing a safety-sensitive function on the City's behalf (usually Contractor and/or Contractors) implement a complex drug and alcohol testing program that complies with Part 655. Second, the rules condition the receipt of certain kinds of FTA funding on the City's compliance

with the rules; thus, the City is not in compliance with the rules unless every entity that performs a safety-sensitive function on the City's behalf is in compliance with the rules. Third, the rules do not specify how the City ensures that its Contractors comply with them.

How the City does so depends on several factors, including whether the Contractor is covered independently by the drug and alcohol rules of another Department of Transportation operating administration, the nature of the relationship that the City has with the Contractor, and the financial resources available to the City to oversee the Contractor's drug and alcohol testing program. In short, there are a variety of ways that the City can ensure that it's Contractor and/or contractors comply with the rules.

The Contractor agrees to establish and implement a drug and alcohol testing program that complies with 49 CFR Part 655, produce any documentation necessary to establish its compliance with Part 655, and permit any authorized representative of the United States Department of Transportation or its operating administrations, the State Oversight Agency of New York, or the City, to inspect the facilities and records associated with the implementation of the drug and alcohol testing program as required under 49 CFR Part 655 and review the testing process. The Contractor agrees further to certify annually its compliance with Part 655 before January 30th and to submit the Management Information System (MIS) reports before March 15th to the Commissioner of the City or his/her designee. To certify compliance, the Contractor shall use the "Substance Abuse Certifications" in the "Annual List of Certifications and Assurances for Federal Transit Administration Grants and Cooperative Agreements," which is published annually in the Federal Register.

The Contractor agrees further to [Select a, b, or c] (a) submit upon request a copy of the Policy Statement developed to implement its drug and alcohol testing program; OR (b) adopt the City's policy statement as required under 49 CFR 655; OR (c) submit for review and approval to the City, a copy of its Policy Statement developed to implement its drug and alcohol testing program. In addition, the Contractor agrees to: (to be determined by the City, but may address areas such as: the selection of the certified laboratory, substance abuse professional, or Medical Review Officer, or the use of a consortium).

32. INTELLIGENT TRANSPORTATION SYSTEM (ITS)

Intelligent transportation system property and services must comply with the National ITS Architecture and Standards to the extent required by 23 U.S.C. § 517(d), FTA Notice, "FTA National ITS Architecture Policy on Transit Projects," 66 FR 1455 *et seq.*, January 8, 2001, and later published policies or implementing directives FTA may issue.

33. AMERICANS WITH DISABILITIES ACT (ADA) FOR ROLLING STOCK

Rolling stock must comply with the accessibility requirements of USDOT regulations, "Transportation Services for Individuals with Disabilities (ADA)," 49 CFR Part 37, and Joint Architectural Transportation Barriers Compliance Board (ATBCB)/USDOT regulations, "Americans with Disabilities (ADA) Accessibility Specifications for Transportation Vehicles," 36 CFR Part 1192 and 49 CFR Part 38. Private entities must comply with the requirements of 49 CFR Part 37 applicable to public entities with which they contract to provide public transportation services. The City advises third party contractors operating public transportation services to review the requirements for public entities in this context.

Appendix A

BUY AMERICA CERTIFICATION

Certification requirement for procurement of steel, iron, or manufactured products.

Certificate of Compliance with 49 U.S.C. 5323(j)(1)

The bidder or offeror hereby certifies that it will meet the requirements of 49 U.S.C. 5323(j)(1) and the applicable regulations in 49 CFR Part 661.

Date _____

Signature_____

Company Name_____

Title _____

Certificate of Non-Compliance with 49 U.S.C. 5323(j)(1)

The bidder or offeror hereby certifies that it cannot comply with the requirements of 49 U.S.C. 5323(j)(1), but it may qualify for an exception pursuant to 49 U.S.C. 5323(j)(2)(B) or (j)(2)(D) and the regulations in 49 CFR 661.7.

Date _____

Signature _____

Company Name _____

Title _____

Certification requirement for procurement of buses, other rolling stock and associated equipment.

Certificate of Compliance with 49 U.S.C. 5323(j)(2)(C).

The bidder or offeror hereby certifies that it will comply with the requirements of 49 U.S.C. 5323(j)(2)(C) and the regulations at 49 CFR Part 661.

Date _____

Signature _____

Company Name _____

Title _____

Certificate of Non-Compliance with 49 U.S.C. 5323(j)(2)(C)

The bidder or offeror hereby certifies that it cannot comply with the requirements of 49 U.S.C. 5323(j)(2)(C), but may qualify for an exception pursuant to 49 U.S.C. 5323(j)(2)(B) or (j)(2)(D) and the regulations in 49 CFR 661.7.

Date _____

Signature _____

Company Name _____

Title _____

Appendix A1

DISCLOSURE OF LOBBYING ACTIVITIES

I _____ hereby certifies on behalf of _____
name and title of company representative name of company

that will file the certification required by 49 CFR Part 20, "New Restrictions on Lobbying." Each tier certifies to the tier above that it will not and has not used Federal appropriated funds to pay any person or organization for influencing or attempting to influence an officer or employee of any agency, a member of Congress, officer or employee of Congress, or an employee of a member of Congress in connection with obtaining any Federal contract, grant or any other award covered by 31 U.S.C. 1352. Each tier shall also disclose the name of any registrant under the Lobbying Disclosure Act of 1995 who has made lobbying contacts on its behalf with non-Federal funds with respect to that Federal contract, grant or award covered by 31 U.S.C. 1352. Such disclosures are forwarded from tier to tier up to the recipient.

The Contractor certifies, to the best of his or her knowledge and belief, that:

(1) No Federal appropriated funds have been paid or will be paid, by or on behalf of the undersigned, to any person for influencing or attempting to influence an officer or employee of an agency, a Member of Congress, an officer or employee of Congress, or an employee of a Member of Congress in connection with the awarding of any Federal contract, the making of any Federal grant, the making of any Federal loan, the entering into of any cooperative agreement, and the extension, continuation, renewal, amendment, or modification of any Federal contract, grant, loan, or cooperative agreement.

(2) If any funds other than Federal appropriated funds have been paid or will be paid to any person for making lobbying contacts to an officer or employee of any agency, a Member of Congress, an officer or employee of Congress, or an employee of a Member of Congress in connection with this Federal contract, grant, loan, or cooperative agreement, the undersigned shall complete and submit Standard Form--LLL, "Disclosure Form to Report Lobbying," in accordance with its instructions [as amended by "Government wide Guidance for New Restrictions on Lobbying," 61 Fed. Reg. 1413 (1/19/96).

(3) The undersigned shall require that the language of this certification be included in the award documents for all subawards at all tiers (including subcontracts, subgrants, and contracts under grants, loans, and cooperative agreements) and that shall certify and disclose accordingly.

This certification is a material representation of fact upon which reliance was placed when this transaction was made or entered into. Submission of this certification is a prerequisite for making or entering into this transaction imposed by 31, U.S.C. § 1352 (as amended by the Lobbying Disclosure Act of 1995). Any person who fails to file the required certification shall be subject to a civil penalty of not less than $10,000 and not more than $100,000 for each such failure.

Pursuant to 31 U.S.C. § 1352(c)(1)-(2)(A), any person who makes a prohibited expenditure or fails to file or amend a required certification or disclosure form shall be subject to a civil penalty of not less than $10,000 and not more than $100,000 for each such expenditure or failure.

The Contractor, _____, certifies or affirms the truthfulness and accuracy of each statement of its certification and disclosure, if any. In addition, the Contractor understands and agrees that the provisions of 31 U.S.C. A 3801, *et seq., apply* to this certification and disclosure, if any.

_____ Signature of Contractor's Authorized Official

_____ Name and Title of Contractor's Authorized Official

_____ Date

Appendix A2

CERTIFICATION OF A CONTRACTOR REGARDING DEBARMENT, SUSPENSION AND OTHER RESPONSIBILITY MATTERS

The Contractor _____, certifies to the best of its knowledge and belief, that it and its principals:

1. Are not presently debarred, suspended, proposed for debarment, declared ineligible, or voluntarily excluded from covered transactions by any Federal department or agency;

2. Have not within a three-year period preceding this proposal been convicted of or had a civil judgment rendered against them for commission of fraud or a criminal offense in connection with obtaining, attempting to obtain, or performing a public (Federal, State or Local) transaction or contract under a public transaction; violation of Federal or State antitrust statutes or commission of embezzlement, theft, forgery, bribery, falsification or destruction of records, making false statements, or receiving stolen property;

3. Are not presently indicted for or otherwise criminally or civilly charged by a governmental entity (Federal, State or Local) with commission of any of the offenses enumerated in paragraph (2) of this certification; and

4. Have not within a three-year period preceding this proposal or bid had one or more public transactions (Federal, State or Local) terminated for cause or default.

5. The Contractor agrees to provide the City with immediate written notice if, at any time, it learns that its certification was erroneous when submitted or has become erroneous by reason of changed circumstances. Each Subcontractor or Vendor for the Contractor shall provide the same updated notice to the Contractor and the Contractor shall be solely responsible for collecting, updating and submitting updated information to the City.

NOTE: If for any reason the Contractor is unable to certify to any of the statements in this certification, the Contractor shall attach an explanation to this certification.

THE CONTRACTOR, _____ CERTIFIES OR AFFIRMS THE TRUTHFULNESS AND ACCURACY OF THE CONTENTS OF THE STATEMENTS SUBMITTED ON OR WITH THIS CERTIFICATION AND UNDERSTANDS THAT THE PROVISIONS OF 31 U.S.C. SECTIONS 3801 ET SEQ. ARE APPLICABLE THERETO.

_____

Signature and Title of Authorized Official

_____

Date

Appendix A3

CERTIFICATION OF A SUBCONTRACTOR/SUPPLIER REGARDING DEBARMENT, SUSPENSION AND OTHER RESPONSIBILITY MATTERS

The Subcontractor/Supplier _____, certifies to the best of its knowledge and belief, that it and its principals:

1. Are not presently debarred, suspended, proposed for debarment, declared ineligible, or voluntarily excluded from covered transactions by any Federal department or agency;

2. Have not within a three-year period preceding this proposal been convicted of or had a civil judgment rendered against them for commission of fraud or a criminal offense in connection with obtaining, attempting to obtain, or performing a public (Federal, State or Local) transaction or contract under a public transaction; violation of Federal or State antitrust statutes or commission of embezzlement, theft, forgery, bribery, falsification or destruction of records, making false statements, or receiving stolen property;

3. Are not presently indicted for or otherwise criminally or civilly charged by a governmental entity (Federal, State or Local) with commission of any of the offenses enumerated in paragraph (2) of this certification; and

4. Have not within a three-year period preceding this proposal or bid had one or more public transactions (Federal, State or Local) terminated for cause or default.

5. The Subcontractor agrees to provide the Contractor with immediate written notice if, at any time, it learns that its certification was erroneous when submitted or has become erroneous by reason of changed circumstances. Each Subcontractor or Vendor for the Contractor shall provide the same updated notice to the Contractor and the Contractor shall be solely responsible for collecting, updating and submitting updated information to the City.

NOTE: If for any reason the Subcontractor/Supplier is unable to certify to any of the statements in this certification, the Contractor shall attach an explanation to this certification.

THE SUBCONTRACTOR/SUPPLIER, _____ CERTIFIES OR AFFIRMS THE TRUTHFULNESS AND ACCURACY OF THE CONTENTS OF THE STATEMENTS SUBMITTED ON OR WITH THIS CERTIFICATION AND UNDERSTANDS THAT THE PROVISIONS OF 31 U.S.C. SECTIONS 3801 ET SEQ. ARE APPLICABLE THERETO.

_____

Signature and Title of Authorized Official

_____

Date

Contractor Note:

Contractor must require all Subcontractors/Suppliers to complete this certification and Contractor shall submit the certifications to the City as they are received.

Appendix B

REQUIRED CONTRACT PROVISIONS

DBE Program

FTA assisted contracts that the City lets will include, as appropriate, the model contract provisions that are included as Appendix B and incorporated herein. NYCDOT shall have discretion to modify the provisions for particular contracts as needed. These required contract provisions consist of:

1. Notice of DBE Contract Requirements in the Invitation for Bids and/or Request For Proposals
2. General Conditions
    a. Assurances
    b. DBE Policy
    c. DBE Obligation
    d. Prompt Payment to Subcontractors
    e. Legal and Contract Remedies
    f. Contractor Reporting Requirements
    g. Retainage Policy

1. Notice of DBE Contract Requirements in the Invitation for Bids

This contract is subject to the Federal Transit Administration (FTA) requirements for implementing the U.S. Department of Transportation (USDOT) regulations for the following areas:

Disadvantaged Business Enterprise (DBE) Requirements

NYCDOT requires all DBE Utilization forms to be provided on new contracts by the prime contractor within seven (7) calendar days of the bid opening.

The successful Proposer/Bidder will be required to meet a NYCDOT Disadvantaged Business Enterprise (DBE) goal. The agency's goals are found in Section 29 of the Third Party Requirements. The DBE contract goal is based on the total value of the contract(s), which should be subcontracted to a DBE firm or firms. To be qualified as a DBE, a firm should be certified in the NYS Unified Certification Program (NYSUCP), in accordance with Federal Regulation 49 CFR Part 26.

Only firms certified by the NYSUCP as DBEs are eligible to be used by the contractor in order to meet the DBE participation goal set on a NYCDOT Federally funded contract.

The NYSUCP Directory can be found at: http://www.nysucp.net

2. General Conditions

All applicants and recipients shall agree to abide by the statements in paragraphs (a) through(e) listed below:

a. Assurances – Section 26.13

Each **financial assistance agreement** signed with a NYCDOT operation administration (of a primary recipient) must include the following assurance:

The recipient shall not discriminate on the basis of race, color, national origin, or sex in the award and performance of any DOT- assisted contract or in the administration of its DBE program or the requirements of 49 CFR Part 26. The recipient shall take all necessary and reasonable steps under 49 CFR part 26 to ensure nondiscrimination in the award and administration of DOT- assisted contracts. The recipient's DBE program, as required by 49 CFR part 26 and as approved by DOT, is incorporated by reference in this agreement. Implementation of this program is a legal obligation and failure to carry out its terms shall be treated as a violation of this agreement. Upon notification to the recipient of its failure to carry out its approved program, the Department may impose sanctions as provided for under part 26 and may, in appropriate cases, refer the matter for enforcement under 18 U.S.C. 1001 and/or the Program Fraud Civil Remedies Act of 1986 (31 U.S.C. 3801 et. seq.).

Each **prime contractor's contract signed with a subcontractor and/or each subcontractor's contract signed with a lower tier contractor** must include the following assurance:

The contractor, sub -recipient or subcontractor shall not discriminate on the basis of race, color, national origin, or sex in the performance of this contract. The contractor shall carry out applicable requirements of 49 CFR Part 26 in the award and administration of DOT- assisted contracts. Failure by the contractor to carry out these requirements is a material breach of this contract, which may result in the termination of this contract or such other remedy as the recipient deems appropriate.

b. DBE Policy

It is the policy of USDOT that DBEs as defined in 49 CFR Part 26 shall have the maximum opportunity to participate in the performance of contracts financed in whole or in part with Federal funds under this agreement. Consequently, the DBE requirements of 49 CFR Part 26 apply to this agreement."

c. DBE Obligation

The recipient or its contractor agrees to ensure that DBEs as defined in 49 CFR Part 26 have the maximum opportunity to participate in the performance of contracts and subcontracts financed in whole or in part with Federal funds provided under this agreement. In this regard, all contractors shall take all necessary and reasonable steps in accordance with 49 CFR Part 26 to ensure that DBEs have the maximum opportunity to compete for and perform contracts. Recipients and their contractors shall not discriminate on the basis of race, color, national origin, or sex in the award and performance of US DOT assisted contracts.
Because this is a federally funded project with its own DBE requirement no separate NYC M/WBE program condition will apply to this contract. Further information or questions can be directed to:

New York City Department of Transportation
ACCO Office of Contract and Compliance
55 Water Street
8th Floor
New York, New York 10041

Attn: Charles Bartolotta, DBE Contract Compliance Officer

d. Prompt Payment to Subcontractors

In accordance with NYCDOT's DBE Program, the Contractor shall pay all Subcontractors for work that has been satisfactorily performed no later than seven (7) days from the date of the Contractor's receipt of progress payments by the City unless a shorter duration is stated elsewhere in the contract. Within seven (7) days of satisfactory completion of all work payment is required to be paid to the Subcontractor.

e. Legal and Contract Remedies

The DBE Compliance Unit shall monitor and track the actual DBE participation through contractor and subcontractor reports of payments, and other appropriate monitoring, as further described in this Program Plan. The DBE Representative shall ensure that DBE participation is counted toward contract goals and the overall annual goal in accordance with the Regulations. In accordance with 49 CFR Part 26, prime contractors may not terminate sub-contractors for convenience. When DBE contractors are terminated, prime contractors will be required to substitute DBE sub-contractors in order to meet its DBE commitment.

The City will monitor compliance of its contractors on FTA assisted contracts within the requirements of the Regulations and the DBE Program. The City may impose such contract remedies as are available under federal, state and local law and regulations for non-compliance. Such remedies may include, but are not limited to, withholding of progress payments and contract retentions, imposition of liquidated damages, and termination of the contract in whole or in part.

f. Contractor Reporting Requirements

New York City Department of Design Construction (NYCDDC) is required to utilize the NYCDOT DBE Program Plan and comply with USDOT regulations 49 CFR Part 26.

NYCDDC, its contractors and subcontractors are subject to contract compliance reviews to ensure that DBE requirements are being met. They are expected to cooperate with the NYCDOT DBE Representative during desk audits and / or on-site reviews. NYCDOT has a Field Representative responsible for project oversight to ensure that contract work is being performed by designated DBE sub-contractors and that the NYCDDC Project Accountant tracks payments to ensure that project goals, when applicable, are followed. The Compliance Officer, and Field Representative also reports work and payment progress to the Project Accountant who then tracks DBE utilization with the DBE Representative. The DBE Compliance Officer and DBE Representative ensure that sub-contractor DBE participation is credited to overall goals after the DBE has received payments.

A sample of our DBE Commitment Letter specifying the Prime Contractors DBE Responsibilities is attached as Appendix D.

g. Retainage Policy

NYCDOT has made a determination that NO RETAINAGE WILL BE HELD ON FTA FUNDED CONTRACTS.

NYCDDC must ensure prompt and full payment from the Contractor to the subcontractor within 7 days after the subcontractor's work is satisfactorily completed.

For purposes of this section, a subcontractor's work is satisfactorily completed when all the tasks called for in the subcontract have been accomplished and documented as required by the recipient. When a recipient has made an incremental acceptance of a portion of a contract, the work of a subcontractor covered by that acceptance is deemed to be satisfactorily completed.

Appendix C

DETERMINING GOOD FAITH EFFORTS PRIOR TO BID

In the event that the apparent low Bidder has not provided evidence of meeting the DBE goal as required by the contract along with its BID, the Department will review the apparent low Bidder's efforts to obtain DBE subcontractors/vendors in order to determine whether such Bidder has in fact made good faith efforts to meet the required DBE goal percentage. In order to make such determination, the Department will consider the quality and quantity of the efforts that the Bidder has made. The following is a list of the types of actions which the Department will consider as part of the Bidder's good faith efforts to obtain DBE participation. It is not intended to be a mandatory checklist, nor is it intended to be exhaustive or exclusive. Other factors or efforts may be relevant in appropriate cases.

1. Efforts to secure participation by certified DBE firms to perform contract work. Only DBEs certified by the NYSUCP shall be used to fulfill the established goal on Federal-Aid contracts.

2. Soliciting through all reasonable and available means (e.g., attendance at pre-bid meetings, advertising and/or written notices) the interest of all certified DBEs who have the capability to perform the work of the contract. The Bidder shall solicit this interest within sufficient time to allow the DBEs to respond to the solicitation. The Bidder shall determine with certainty if the DBEs are interested by taking appropriate steps to follow up on initial responses to the Bidder's inquiries.

3. *a.* The Bidder shall, at a minimum, seek certified DBEs in the same geographic region where the contract is located. This is defined as a one hundred (100) kilometer radius around the city, town or borough where the contract is located as identified in the contract books. For specialty work such as pavement markings, guide rail, etc., the Bidder shall, at a minimum, solicit on an upstate or downstate basis, depending upon the location of the contract.

   b. Identification of upstate and downstate and areas within a 100 kilometer radius is available through the NYSUCP website, which is accessible on the Internet at *www.nysucp.net.* For bidders who do not have internet capability, a hard copy solicitation report for a specific contract can be requested by contacting the Office of Contract and Compliance Unit at (212) 839-9411.

4. Selecting portions of the work to be performed by DBEs in order to increase the likelihood that the DBE goal(s) will be achieved. This includes, where appropriate, either breaking down operations within the contract or combining like or related operations in the contract into logistically and economically feasible units to facilitate DBE participation, even when the Contractor might otherwise prefer to perform these work items with its own forces.

5. Providing interested DBEs with adequate information about the plans, specifications, and requirements of the contract in a timely manner to assist them in responding to a solicitation.

6. a. Negotiating in good faith with interested DBEs. It is the Bidder's responsibility to make a portion of the work available to DBE's Subcontractors and material suppliers and to select those portions of the work or material needs consistent with the available DBE's subcontractors and material suppliers, so as to facilitate DBE participation. Evidence of such negotiation includes the names, addresses, and telephone numbers of DBEs that were considered; a description of the information provided regarding the plans and specifications

for the work selected for subcontracting; and evidence as to why additional agreements could not be reached for DBEs to perform the work.

b. The fact that there may be some additional cost involved in finding and using DBEs is not itself sufficient reason for a Bidder's failure to meet contract DBE goal(s), as long as such costs are reasonable.

7. Making efforts to assist interested DBEs in obtaining bonding, lines of credit or insurance as required by the City.

8. Making efforts to assist interested DBEs in obtaining necessary equipment, supplies, materials, or related assistance.

9. Effectively using the services of available disadvantaged business focused media, trade associations, and contractors' groups; local, state, and Federal disadvantaged business assistance offices; and other organizations as allowed on a case-by-case basis to provide assistance in the recruitment and placement of DBEs.

10. All bidders shall keep records of efforts to solicit and negotiate with DBEs, using the Solicitation Log as a continuing record of pre- and post-letting solicitation activity. When submitting a DBE Schedule of Utilization to the City, the Apparent Low Bidder will attach the log, together with the supplemental information specified in the instructions for the Solicitation Log as evidence of good-faith efforts when the established DBE goal(s) for the contract have not been met utilizing certified DBEs. Such supplemental efforts shall include at least the following:
    a. All envelopes of solicitation inquires that were returned as undeliverable; and
    b. Any quotations submitted by DBEs that are not included in the DBE Schedule of Utilization with an explanation for the Bidder's action in case.

11. Promptly executing an agreement with DBE Subcontracts/vendors.

Appendix D

SAMPLE PRIME CONTRACTOR AWARD LETTER

Date

Prime Contractor Winner, Inc.
Attn: Mr. Buck Stops Here, President
1111 Bottom Line Street
Anywhere, New York 10000

Re: Contract Name and/or Description

Dear Mr. John Doe:

Your Company was awarded and recently executed the above listed contract with NYCDDC. Part of the consideration in awarding the contract was the Disadvantaged Business Enterprise (DBE) participation that you listed in the bid/proposal document.
Please be advised that you will be required to meet your Disadvantaged Business Enterprise Goals of 11%

You have listed the following DBE firm(s) and the dollar amounts of their subcontracts:

ABC Electrical Co.	**Electrical Contracting**	**$xx,xxx**
DEF Plumbing	**Plumbing Contracting**	**$xx,xxx**
GHI Roofing	**Roofing Contracting**	**$xx,xxx**
JKL Printing Co.	**Printing**	**$xx,xxx**

The DBE firm(s) listed above represent(s) your commitment to NYCDOT's DBE program and each respective DBE firm.

To ensure the integrity of the DBE program, NYCDOT has developed DBE compliance procedures that should be followed during this contract. NYCDOT's DBE Department and Contract Administrator should be notified in writing prior to any material changes from the above commitments. Also, any changes should be for real and substantial reasons. Frivolous and/or unsubstantiated changes are unacceptable.

Please provide to the DBE Department, within 3 calendar days of execution, a copy of your executed subcontract with each DBE firm. A letter of commitment signed by both an authorized representative of your firm and the DBE firm may be submitted instead of signed subcontracts. The letter should verify the subcontract dollar amount, the general work scope, **and affirm the absence of subcontract restrictions or requirements that are unfair, burdensome, outside of normal business practices, unjustly punitive, etc.** There should be a letter for **each** DBE firm.

Also, you **must** attach NYCDOT's **DBE Expenditure Report** (see contract compliance manual) with **each** invoice/payment request that you submit to NYCDDC's Contract Administrator. This report is designed to provide an accounting of monthly and year-to-date payments made to the DBE firm(s) that you have subcontracted with above.

The DBE Expenditure Report reflects the dollars that **will be paid** to each DBE firm from your **submitted invoice/payment request.** Evidence of payments (i.e. copy of canceled checks, copy of check register, etc.) may be periodically requested. NYCDDC **may not** authorize payment unless the DBE Expenditure Report accompanies your invoice/payment request.

Finally, please submit a DBE projected work schedule (i.e. a breakdown by month of expected DBE activity). Updates of the projected work schedule should be submitted as needed over the life of the contract.

Failure to comply may result in breach of contract and it may jeopardize future contracts with NYCDDC.

If you have any questions you may contact NYCDOT's Contract Compliance Unit at (212) 839-9411 or email us at accomail@dot.nyc.gov.

Thank you for your continued commitment and cooperation.

Cordially,

DBE Administrator

cc: Every DBE Firm Listed Above
Appropriate Project Manager, NYCDOT
Contracts Administrator, NYCDDC
Purchasing Administrator, NYCDOT
DBE File, NYCDOT
Others As Needed

Appendix E

MINORITY OWNED FINANCIAL INSTITUTIONS

All contractors are encouraged to use Minority Owned Financial Institutions. A list can be found at http://www.federalreserve.gov/releases/mob/.

Appendix F

PREVAILING WAGE RATES
CURRENT DAVIS-BACON PREVAILING WAGE RATES

Bidders and the selected Contractor, if any, shall be responsible for confirming and adhering to the actual Davis-Bacon Wage Rates in effect at any time after the issuance of this IFB including, without limitation, during the Contract Term. Federal Davis-Bacon Wage Rates may be accessed through the U.S. Department of Labor's Website at: http://www.wdol.gov/wdol/scafiles/davisbacon/ny.html.

>

General Decision Number: NY150003 04/17/2015 NY3

Superseded General Decision Number: NY20140003

State: New York

Construction Types: Building, Heavy, Highway and Residential

Counties: Bronx, Kings, New York, Queens and Richmond Counties in New York.

BUILDING & RESIDENTIAL CONSTRUCTION PROJECTS (includes single family homes and apartments up to and including 4 stories), HEAVY AND HIGHWAY CONSTRUCTION PROJECTS

Note: Executive Order (EO) 13658 establishes an hourly minimum wage of $10.10 for 2015 that applies to all contracts subject to the Davis-Bacon Act for which the solicitation is issued on or after January 1, 2015. If this contract is covered by the EO, the contractor must pay all workers in any classification listed on this wage determination at least $10.10 (or the applicable wage rate listed on this wage determination, if it is higher) for all hours spent performing on the contract. The EO minimum wage rate will be adjusted annually. Additional information on contractor requirements and worker protections under the EO is available at www.dol.gov/whd/govcontracts.

Modification Number	Publication Date
0	01/02/2015
1	01/09/2015
2	01/30/2015
3	03/06/2015
4	03/13/2015
5	04/17/2015

* ASBE0012-001 12/29/2014

	Rates	Fringes
Asbestos Workers/Insulator Includes application of all insulating materials, protective coverings, coatings and finishes to all types of mechanical systems	$ 64.41	30.76
HAZARDOUS MATERIAL HANDLER	$ 40.00	11.25

BOIL0005-001 01/01/2013

	Rates	Fringes
BOILERMAKER	$ 49.47	33%+22.87+a

FOOTNOTE:

a. PAID HOLIDAYS: New Year's Day, Thanksgiving Day, Memorial Day, Independence Day, Labor Day and Good Friday, Friday after Thanksgiving, Christmas Eve Day and New Year's Eve

---

BRNY0001-001 07/01/2013

	Rates	Fringes
BRICKLAYER	$ 49.09	22.93
MASON - STONE	$ 55.56	26.75

BRNY0001-002 06/01/2014

	Rates	Fringes
Pointer, cleaner and caulker	$ 39.67	28.34

BRNY0004-001 07/01/2014

	Rates	Fringes
MARBLE MASON	$ 55.85	29.73

BRNY0007-001 07/01/2014

	Rates	Fringes
TERRAZZO FINISHER	$ 47.28	32.16
TERRAZZO WORKER/SETTER	$ 48.88	32.18

BRNY0020-001 07/01/2014

	Rates	Fringes
MARBLE FINISHER	$ 44.54	29.31

BRNY0024-001 07/01/2014

	Rates	Fringes
BRICKLAYER MARBLE POLISHERS	$ 38.96	23.00

BRNY0052-001 06/02/2014

	Rates	Fringes
Tile Layer	$ 46.04	23.52

BRNY0088-001 06/01/2014

	Rates	Fringes
TILE FINISHER	$ 40.78	27.86

CARP0001-009 07/01/2014

	Rates	Fringes
CARPENTER		
Carpenters & Soft floor layers	$ 49.88	43.40

CARP0740-001 07/01/2014

	Rates	Fringes
MILLWRIGHT	$ 48.44	49.83

CARP1456-004 07/01/2014

	Rates	Fringes
Dock Builder & Piledrivermen		
DOCKBUILDERS	$ 48.35	45.07

CARP1456-005 07/01/2014

	Rates	Fringes
Diver Tender	$ 43.45	45.07
Diver	$ 61.30	45.07

CARP1536-001 07/01/2014

	Rates	Fringes
Carpenters:		
TIMBERMEN	$ 44.33	44.34

ELEC0003-001 05/14/2014

	Rates	Fringes
ELECTRICIAN		
Electricians	$ 53.00	27.06
Jobbing, and maintenance and repair work	$ 25.30	15.13+a

PAID HOLIDAYS:

a. New Years Day, Martin Luther King, Jr.'s Birthday, Washington's Birthday, Memorial Day, Independence Day, Labor Day, Columbus Day, Election Day, Thanksgiving Day, the day after Thanksgiving Day, and Christmas Day

* ELEC1049-001 03/29/2015

QUEENS COUNTY

	Rates	Fringes
Line Construction (Substation and Switching structures pipe type cable installation and maintenance jobs or projects;		

Railroad electrical distribution/transmission systems maintenance (when work is not performed by railroad employees) Overhead and Underground transmission/distribution line work. Fiber optic, telephone cable and equipment)

Groundman	$ 30.46	21.08
Heavy Equipment Operator	$ 40.61	24.31
Lineman and Cable Splicer	$ 50.76	27.58
Tree Trimmer	$ 23.06	28.5%+9.75

ELEV0001-002 03/17/2013

	Rates	Fringes
ELEVATOR MECHANIC		
Elevator Constructor	$ 57.01	27.605+a+b
Modernization and Repair	$ 45.14	27.455+a+b

FOOTNOTE:

a. PAID HOLIDAYS: New Year's Day, Good Friday, President's Day, Memorial Day, Independence Day, Labor Day, Columbus Day, Veteran's Day, Thanksgiving Day, Friday after Thanksgiving, and Christmas Day.

b. PAID VACATION: An employee who has worked less than 5 years shall recieve vacation pay credit on the basis of 4% of his hourly rate for all hours worked; an employee who has worked 5 to 15 years shall receive vacation pay credit on the basis of 6% of his hourly rate for all hours worked; an employee who has worked 15 or more years shall receive vacation pay credit on the basis of 8% of his hourly rate for all hours worked.

ENGI0014-001 07/01/2013

	Rates	Fringes
Pavement equipment operator		
Asphalt Plants	$ 54.17	28.65+a
Asphalt roller	$ 64.04	28.65+a
Asphalt spreader	$ 65.76	28.65+a
Power Equipment Operator (HEAVY & HIGHWAY)		
GROUP 1	$ 85.00	28.65
GROUP 10	$ 61.53	28.65
GROUP 11	$ 57.46	28.65
GROUP 12	$ 58.74	28.65
GROUP 13	$ 59.21	28.65
GROUP 14	$ 44.63	28.65
GROUP 15	$ 41.44	28.65
GROUP 2	$ 70.10	28.65
GROUP 3	$ 72.34	28.65
GROUP 4	$ 70.63	28.65
GROUP 5	$ 69.23	28.65

GROUP 6	$ 66.45	28.65
GROUP 7	$ 67.70	28.65
GROUP 8	$ 65.76	28.65
GROUP 9	$ 64.34	28.65
Steel erector		
Compressors, Welding Machines	$ 41.84	28.65
Cranes, Hydraulic Cranes, 2 drum derricks, Forklifts, Boom Trucks	$ 70.50	28.65
Three drum derricks	$ 73.37	28.65
Utility Laborer		
Horizontal Boring Rig	$ 62.53	28.65
Off shift compressors	$ 51.93	28.65
Utility Compressors	$ 41.18	28.65

POWER EQUIPMENT OPERATOR CLASSIFICATIONS

GROUP 1: Tower crane

GROUP 2: Backhoes, power shovel, Hydraulic clam shells, moles and machines of a similar type

GROUP 3: Mine hoists and crane, etc. used as mine hoists

GROUP 4: Gradalls, keystones, cranes (with digging buckets), bridge cranes, trenching machines, vermeer cutter and machines of a similar nature

GROUP 5: Piledrivers, derrick boats, tunnel shovels

GROUP 6: All drills, and machines of a similar nature

GROUP 7: Back filling machines, cranes, mucking machines, dual drum pavers

GROUP 8: Mixers (concrete w/loading attachments), concrete pavers, cableways, land derricks, power house (low pressure units), concrete pumps

GROUP 9: Concrete plants, well drilling machines, stone crushers double drum hoist, power house (other than above)

GROUP 10: Concrete mixers

GROUP 11: Elevators

GROUP 12: Concrete breaking machine, Hoists (single drum), load masters, locomotive and dinkies over 10 tons

GROUP 13: Vibratory console

GROUP 14: Compressors (portable 3 or more in battery), tugger machine (caissons), well point pumps, chum drill

GROUP 15: Boilers, (high pressure, compressors (portable, single, or 2 in battery, not over 100' apart), pumps (river cofferdam and welding machines (except where arc is operated by members of local 15) push button machines, all engines irrespective of power (power pac) used to drive

auxilliary equipment, air, hydraulic etc.

PREMIUMS ON CRANES (Crawler or Truck):
100' to 149' boom - add .50
150' to 249' boom - add .75
250' to 349' boom - add 1.00
350' to 450' boom - add 1.50

Premiums for Cranes on Steel Erection:
100' to 149' boom - add 1.75
150' to 249' boom - add 2.00
250' to 349' boom - add 2.25
350' to 450' boom - add 2.75
Tower crane - add 2.00

FOOTNOTE:
a. Paid Holidays: New Year's Day; Lincoln's Birthday; Washington's Birthday; Memorial Day; Independence Day; Labor Day; Veterans Day; Columbus Day; Election Day; Thanksgiving Day; and Christmas Day; provided the employee works one day the payroll week in which the holiday occurs.

ENGI0014-002 07/01/2013

	Rates	Fringes
Power Equipment Operator		
BUILDING & RESIDENTIAL		
GROUP 1	$ 65.83	28.65+a
GROUP 2	$ 69.74	28.65+a
GROUP 3	$ 63.58	28.65+a
GROUP 4	$ 57.82	28.65+a
GROUP 5	$ 43.28	28.65+a

POWER EQUIPMENT OPERATORS CLASSIFICATIONS

GROUP 1: Double drum

GROUP 2: Stone derrick, cranes, hydraulic cranes, boom trucks

GROUP 3: 4 pole Hoist, Single Drum Hoists

GROUP 4: Fork lift, house cars, plaster (platform machine), plaster bucket, concrete pump and all other equipment used for hoisting material

GROUP 5: Compressors, welding machines (cutting concrete work), paint spraying, sand blasting, pumps (with the exclusion of concrete pumps), house car (settlement basis only), all engines irrespective of power (power pac) used to drive auxiliary equipment, air, hydraulic, etc., boilers

Premiums for Cranes:
100'-149' boom - add 1.75
150'-249' boom - add 2.00
250'-349' boom - add 2.25
350'-450' boom - add 2.75
Tower cranes add 2.00

FOOTNOTE:
a. PAID HOLIDAYS: New Year's Day, Lincoln's Birthday, Memorial Day, Independence Day, Labor Day, Veteran's Day, Columbus Day, Election Day, Thanksgiving Day, and Christmas Day, provided the employee works one day in the payroll week in which the holiday occurs

---

IRON0040-002 01/01/2015

BRONX, NEW YORK, RICHMOND

	Rates	Fringes
IRONWORKER, STRUCTURAL	$ 48.25	66.32

IRON0046-003 07/01/2014

	Rates	Fringes
IRONWORKER METALLIC LATHERS AND REINFORCING IRONWORKERS	$ 40.60	30.56

IRON0197-001 06/01/2013

	Rates	Fringes
IRONWORKER STONE DERRICKMAN	$ 41.00	36.57

IRON0361-002 01/01/2015

KINGS, QUEENS

	Rates	Fringes
Ironworkers: (STRUCTURAL)	$ 48.25	66.32

IRON0580-001 07/01/2014

	Rates	Fringes
IRONWORKER, ORNAMENTAL	$ 42.70	44.35

LABO0006-001 07/01/2013

	Rates	Fringes
LABORER (Cement and Concrete Workers)	$ 42.38	20.52

LABO0029-001 07/01/2013

	Rates	Fringes
Laborers: Heavy		

Blasters (hydraulic trac drill)	$ 41.30	29.10
Blasters	$ 40.55	29.10
Hydraulic Trac Drill	$ 29.92	29.10
Jackhammers, Chippers, Spaders, Concrete Breakers, All Other Pneumatic Tools, Walk Behind Self-Propelled Hydraulic Asphalt and Concrete Breaker	$ 34.64	29.10
Powder Carriers	$ 31.08	29.10
Wagon; Airtrac; Quarry Bar Drill Runners	$ 35.07	28.00

LABO0078-001 02/01/2013

	Rates	Fringes
LABORERS		
BUILDING CONSTRUCTION		
ASBESTOS (Removal, Abatement, Encapsulation or Decontamination of asbestos); LEAD; & HAZARDOUS WASTE LABORERS (Hazardous Waste, Hazardous Materials, Biochemical and Mold Remediation, HVAC, Duct Cleaning, Re-spray Fireproofing, etc)	$ 35.90	14.75

LABO0079-001 01/01/2015

	Rates	Fringes
Laborers Building Construction		
Demolition Laborers		
Tier A	$ 37.30	23.96
Tier B	$ 26.20	17.82
Mason Tenders	$ 38.47	24.88

CLASSIFICATIONS

TIER A: Responsible for the removal of all interior petitions and structural petitions that can consist of sheet rock, block or masonry. Also, all structural slab openings for ducts, mechanical, shafts, elevators, slab openings and exterior walls where the building is not being completely demolitioned.

TIER B: Responsible for shoveling of debris into containers, pushing containers from the inside to the outside of the building.

LABO0147-001 07/01/2013

	Rates	Fringes

LABORERS (FREE AIR & TUNNEL).....$ 52.23 37.23

Maintenance Men, Inside Muck Lock Tenders, Pump Men, Electricians, Cement Finishers, Caulkers, Hydraulic Men, Shield Men, Monorail Operators, Motor Men, Conveyor Men, Powder Carriers, Pan Men, Riggers, Chuck Tenders, Track Men Painters, Nippers, Brakemen, Cable Men, Hose Men, Grout Men, Gravel Men, Form Workers, Concrete Workers, Tunnel Laborers, Mole Nipper (one (1) Mole Sipper per Working Shaft per Shift for up to and including Two (2) Moles

---

LABO0731-001 07/01/2014

	Rates	Fringes
LABORER		
Building, Heavy and Residential Construction		
LABORER: (Asbestos, Lead, Hazardous Waste Removal (including soil)/CEMENT/CONCRETE.....	$ 39.85	34.78
UTILITY LABORER.....	$ 39.70	34.78

Paid Holidays: Labor Day and Thanksgiving Day

LABO1010-001 07/01/2011

	Rates	Fringes
Laborers:		
HIGHWAY CONSTRUCTION		
Fence Installer & Repairer.	$ 38.34	30.25
FORMSETTERS.....	$ 42.21	30.25
LABORERS.....	$ 38.34	30.25
Landscape Planting & Maintenance.....	$ 38.34	30.25
Maintenance Safety Surface.	$ 38.34	30.25
Slurry/Sealcoater/Play Equipment Installer.....	$ 38.34	30.25
Small Equipment Operator (Not Operating Engineer)...	$ 38.34	30.25
Small Power Tools Operator.	$ 38.34	30.25

FOOTNOTES:

a. PAID HOLIDAYS: Memorial Day, Fourth of July, Labor Day, Columbus Day, Election Day and Thanksgiving Day, provided the employee has worked one (1) day in the calendar week in which the said holiday occurs.

LABO1010-002 07/01/2011

	Rates	Fringes
Laborers-Asphalt Construction:		
Micro Paver.....	$ 44.86	30.25

Raker	$ 44.37	30.25
Screedperson	$ 44.86	30.25
Shoveler (Production Paving Only)	$ 41.08	30.25
Small Equipment Operator (Asphalt)	$ 41.08	30.25

PAIN0009-001 11/01/2014

	Rates	Fringes
GLAZIER	$ 42.85	27.09
PAINTER		
Painters, Drywall Finishers, Lead Abatement Worker	$ 41.75	20.87
Spray, Scaffold and Sandblasting	$ 46.75	21.87

PAIN0806-001 10/01/2014

	Rates	Fringes
Painters:		
Structural Steel and Bridge	$ 48.75	35.63

PAIN1974-001 12/26/2012

	Rates	Fringes
Painters:		
Drywall Tapers/Pointers	$ 43.82	22.01

PLAS0262-001 02/01/2012

	Rates	Fringes
PLASTERER	$ 40.78	26.80

PLAS0262-002 02/01/2012

KINGS AND QUEENS COUNTIES

	Rates	Fringes
PLASTERER	$ 40.78	26.80

PLAS0780-001 07/01/2014

	Rates	Fringes
CEMENT MASON/CONCRETE FINISHER	$ 45.88	39.70

PLUM0001-001 01/01/2015

	Rates	Fringes
PLUMBER		
MECHANICAL EQUIPMENT AND SERVICE		

Any repair and/or replacement of the present plumbing system that does not change the existing roughing.....$ 38.77 13.34
PLUMBERS:.....$ 65.27 26.8

PLUM0638-001 06/27/2012

	Rates	Fringes
PLUMBER		
SERVICE FITTERS	$ 26.30	2.55
SPRINKLER FITTERS, STEAMFITTERS	$ 51.25	49.54

Service Fitter work shall consist of all repair, service and maintenance work on domestic, commercial and industrial refrigeration, air conditioning and air cooling, stoker and oil burner apparatus and heating apparatus etc., including but not exclusively the charging, evacuation, leak testing and assembling for all machines for domestic, commercial and industrial refrigeration, air conditioning and heating apparatus. Also, work shall include adjusting, including capacity adjustments, checking and repairing or replacement of all controls and start up of all machines and repairing all defects that may develop on any system for domestic, commercial and industrial refrigeration and all air conditioning, air cooling, stoker and oil burner apparatus and heating apparatus regardless of size or type.

ROOF0008-003 07/01/2014

	Rates	Fringes
ROOFER	$ 40.70	25.14

SHEE0028-002 07/31/2014

	Rates	Fringes
SHEET METAL WORKER		
BUILDING CONSTRUCTION	$ 50.91	36.70
RESIDENTIAL CONSTRUCTION	$ 27.22	16.48

TEAM0282-001 07/01/2014

	Rates	Fringes
TRUCK DRIVER		
Asphalt	$ 39.34	41.6025+a
Euclids & Turnapulls	$ 38.875	41.6025+a
High Rise	$ 47.01	41.6025+a

FOOTNOTES:

PAID HOLIDAYS: New Year's Day, Presidents' Day, Memorial Day, Independence Day, Labor Day, Columbus Day, Election Day, Veterans' Day (Armistice Day), Thanksgiving Day, Day after

Thanksgiving and Christmas Day. Employees working two (2) days in the calendar week in which a holiday falls are to be paid for such holiday, provided that they shape each remaining workday during such calendar week.

WELDERS - Receive rate prescribed for craft performing operation to which welding is incidental.

==========

Unlisted classifications needed for work not included within the scope of the classifications listed may be added after award only as provided in the labor standards contract clauses (29CFR 5.5 (a) (1) (ii)).

The body of each wage determination lists the classification

and wage rates that have been found to be prevailing for the cited type(s) of construction in the area covered by the wage determination. The classifications are listed in alphabetical order of "identifiers" that indicate whether the particular rate is a union rate (current union negotiated rate for local), a survey rate (weighted average rate) or a union average rate (weighted union average rate).

Union Rate Identifiers

A four letter classification abbreviation identifier enclosed in dotted lines beginning with characters other than "SU" or "UAVG" denotes that the union classification and rate were prevailing for that classification in the survey. Example: PLUM0198-005 07/01/2014. PLUM is an abbreviation identifier of the union which prevailed in the survey for this classification, which in this example would be Plumbers. 0198 indicates the local union number or district council number where applicable, i.e., Plumbers Local 0198. The next number, 005 in the example, is an internal number used in processing the wage determination. 07/01/2014 is the effective date of the most current negotiated rate, which in this example is July 1, 2014.

Union prevailing wage rates are updated to reflect all rate changes in the collective bargaining agreement (CBA) governing this classification and rate.

Survey Rate Identifiers

Classifications listed under the "SU" identifier indicate that no one rate prevailed for this classification in the survey and the published rate is derived by computing a weighted average rate based on all the rates reported in the survey for that classification. As this weighted average rate includes all rates reported in the survey, it may include both union and

non-union rates. Example: SULA2012-007 5/13/2014. SU indicates the rates are survey rates based on a weighted average calculation of rates and are not majority rates. LA indicates the State of Louisiana. 2012 is the year of survey on which these classifications and rates are based. The next number, 007 in the example, is an internal number used in producing the wage determination. 5/13/2014 indicates the survey completion date for the classifications and rates under that identifier.

Survey wage rates are not updated and remain in effect until a new survey is conducted.

Union Average Rate Identifiers

Classification(s) listed under the UAVG identifier indicate that no single majority rate prevailed for those classifications; however, 100% of the data reported for the classifications was union data. EXAMPLE: UAVG-OH-0010 08/29/2014. UAVG indicates that the rate is a weighted union average rate. OH indicates the state. The next number, 0010 in the example, is an internal number used in producing the wage determination. 08/29/2014 indicates the survey completion date for the classifications and rates under that identifier.

A UAVG rate will be updated once a year, usually in January of each year, to reflect a weighted average of the current negotiated/CBA rate of the union locals from which the rate is based.

WAGE DETERMINATION APPEALS PROCESS

1.) Has there been an initial decision in the matter? This can be:

* an existing published wage determination
* a survey underlying a wage determination
* a Wage and Hour Division letter setting forth a position on a wage determination matter
* a conformance (additional classification and rate) ruling

On survey related matters, initial contact, including requests for summaries of surveys, should be with the Wage and Hour Regional Office for the area in which the survey was conducted because those Regional Offices have responsibility for the Davis-Bacon survey program. If the response from this initial contact is not satisfactory, then the process described in 2.) and 3.) should be followed.

With regard to any other matter not yet ripe for the formal process described here, initial contact should be with the Branch of Construction Wage Determinations. Write to:

Branch of Construction Wage Determinations
Wage and Hour Division
U.S. Department of Labor
200 Constitution Avenue, N.W.

Washington, DC 20210

2.) If the answer to the question in 1.) is yes, then an interested party (those affected by the action) can request review and reconsideration from the Wage and Hour Administrator (See 29 CFR Part 1.8 and 29 CFR Part 7). Write to:

Wage and Hour Administrator
U.S. Department of Labor
200 Constitution Avenue, N.W.
Washington, DC 20210

The request should be accompanied by a full statement of the interested party's position and by any information (wage payment data, project description, area practice material, etc.) that the requestor considers relevant to the issue.

3.) If the decision of the Administrator is not favorable, an interested party may appeal directly to the Administrative Review Board (formerly the Wage Appeals Board). Write to:

Administrative Review Board
U.S. Department of Labor
200 Constitution Avenue, N.W.
Washington, DC 20210

4.) All decisions by the Administrative Review Board are final.

==========

END OF GENERAL DECISION

STANDARD CLAUSES FOR ALL NEW YORK STATE CONTRACTS

The parties to the attached contract, license, lease, amendment or other agreement of any kind (hereinafter, "the contract" or "this contract") agree to be bound by the following clauses which are hereby made a part of the contract (the word "Contractor" herein refers to any party other than the State, whether a contractor, licensor, licensee, lessor, lessee or any other party):

1. **EXECUTORY CLAUSE.** In accordance with Section 41 of the State Finance Law, the State shall have no liability under this contract to the Contractor or to anyone else beyond funds appropriated and available for this contract.

2. **NON-ASSIGNMENT CLAUSE.** In accordance with Section 138 of the State Finance Law, this contract may not be assigned by the Contractor or its right, title or interest therein assigned, transferred, conveyed, sublet or otherwise disposed of without the previous consent, in writing, of the State and any attempts to assign the contract without the State's written consent are null and void. The Contractor may, however, assign its right to receive payment without the State's prior written consent unless this contract concerns Certificates of Participation pursuant to Article 5-A of the State Finance Law.

3. **COMPTROLLER'S APPROVAL.** In accordance with Section 112 of the State Finance Law (or, if this contract is with the State University or City University of New York, Section 355 or Section 6218 of the Education Law), if this contract exceeds $15,000 (or the minimum thresholds agreed to by the Office of the State Comptroller for certain S.U.N.Y. and C.U.N.Y. contracts), or if this is an amendment for any amount to a contract which, as so amended, exceeds said statutory amount, or if, by this contract, the State agrees to give something other than money when the value or reasonably estimated value of such consideration exceeds $10,000, it shall not be valid, effective or binding upon the State until it has been approved by the State Comptroller and filed in his office. Comptroller's approval of contracts let by the Office of General Services is required when such contracts exceed $30,000 (State Finance Law Section 163.6.a).

4. **WORKERS' COMPENSATION BENEFITS.** In accordance with Section 142 of the State Finance Law, this contract shall be void and of no force and effect unless the Contractor shall provide and maintain coverage during the life of this contract for the benefit of such employees as are required to be covered by the provisions of the Workers' Compensation Law.

5. **NON-DISCRIMINATION REQUIREMENTS.** To the extent required by Article 15 of the Executive Law (also known as the Human Rights Law) and all other State and Federal statutory and constitutional non-discrimination provisions, the Contractor will not discriminate against any employee or applicant for employment because of race, creed, color, sex, national origin, sexual orientation, age, disability, genetic predisposition or carrier status, or marital status. Furthermore, in accordance with Section 220-e of the Labor Law, if this is a contract for the construction, alteration or repair of any public building or public work or for the manufacture, sale or distribution of materials, equipment or supplies, and to the extent that this contract shall be performed within the State of New York, Contractor agrees that neither it nor its Subcontractors shall, by reason of race, creed, color, disability, sex or national origin: (a) discriminate in hiring against any New York State citizen who is qualified and available to perform the work; or (b) discriminate against or intimidate any employee hired for the performance of work under this contract. If this is a building service contract as defined in Section 230 of the Labor Law, then, in accordance with Section 239 thereof, Contractor agrees that neither it nor its Subcontractors shall, by reason of race, creed, color, national origin, age, sex or disability: (a) discriminate in hiring against any New York State citizen who is qualified and available to perform the work; or (b) discriminate against or intimidate any employee hired for the performance of work under this contract. Contractor is subject to fines of $50.00 per person per day for any violation of Section 220-e or Section 239 as well as possible termination of this contract and forfeiture of all moneys due hereunder for a second or subsequent violation.

6. WAGE AND HOURS PROVISIONS. If this is a public work contract covered by Article 8 of the Labor Law or a building service contract covered by Article 9 thereof, neither Contractor's employees nor the employees of its Subcontractors may be required or permitted to work more than the number of hours or days stated in said statutes, except as otherwise provided in the Labor Law and as set forth in prevailing wage and supplement schedules issued by the State Labor Department. Furthermore, Contractor and its Subcontractors must pay at least the prevailing wage rate and pay or provide the prevailing supplements, including the premium rates for overtime pay, as determined by the State Labor Department in accordance with the Labor Law.

7. NON-COLLUSIVE BIDDING REQUIREMENT. In accordance with Section 139-d of the State Finance Law, if this contract was awarded based upon the submission of bids, Contractor warrants, under penalty of perjury, that its bid was arrived at independently and without collusion aimed at restricting competition. Contractor further warrants that at the time Contractor submitted its bid, an authorized and responsible person executed and delivered to the State a non-collusive bidding certification on Contractor's behalf.

8. INTERNATIONAL BOYCOTT PROHIBITION. In accordance with Section 220-f of the Labor Law and Section 139-h of the State Finance Law, if this contract exceeds $5,000, the Contractor agrees, as a material condition of the contract, that neither the Contractor nor any substantially owned or affiliated person, firm, partnership or corporation has participated, is participating, or shall participate in an international boycott in violation of the Federal Export Administration Act of 1979 (50 USC App. Sections 2401 et seq.) or regulations thereunder. If such Contractor, or any of the aforesaid affiliates of Contractor, is convicted or is otherwise found to have violated said laws or regulations upon the final determination of the United States Commerce Department or any other appropriate agency of the United States subsequent to the contract's execution, such contract, amendment or modification thereto shall be rendered forfeit and void. The Contractor shall so notify the State Comptroller within five (5) business days of such conviction, determination or disposition of appeal (2 NYCRR 105.4).

9. SET-OFF RIGHTS. The State shall have all of its common law, equitable and statutory rights of setoff. These rights shall include, but not be limited to, the State's option to withhold for the purposes of setoff any moneys due to the Contractor under this contract up to any amounts due and owing to the State with regard to this contract, any other contract with any State department or agency, including any contract for a term commencing prior to the term of this contract, plus any amounts due and owing to the State for any other reason including, without limitation, tax delinquencies, fee delinquencies or monetary penalties relative thereto. The State shall exercise its set-off rights in accordance with normal State practices including, in cases of set-off pursuant to an audit, the finalization of such audit by the State agency, its representatives, or the State Comptroller.

10. RECORDS. The Contractor shall establish and maintain complete and accurate books, records, documents, accounts and other evidence directly pertinent to performance under this contract (hereinafter, collectively "the Records"). The Records must be kept for the balance of the calendar year in which they were made and for six (6) additional years thereafter or three (3) years after final payment, whichever is later. The State Comptroller, the Attorney General and any other person or entity authorized to conduct and examination, as well as the agency or agencies involved in this contract, shall have access to the Records during normal business hours at an office of the Contractor within the State of New York or, if no such office is available, at a mutually agreeable and reasonable venue within the State, for the term specified above for the purposes of inspection, auditing and copying. The State shall take reasonable steps to protect from public disclosure any of the Records which are exempt from disclosure under Section 87 of the Public Officers Law (the "Statute") provided that: (i) the Contractor shall timely inform an appropriate State official, in writing, that said records should not be disclosed; and (ii) said records shall be sufficiently identified; and (iii) designation of said records as exempt under the Statute is reasonable. Nothing contained herein shall diminish, or in any way adversely affect, the State's right to discovery in any pending or future litigation.

11. **IDENTIFYING INFORMATION AND PRIVACY NOTIFICATION:**

(A) Federal Employer Identification Number And/or Federal Social Security Number. All invoices or New York State standard vouchers submitted for payment for the sale of goods of services or the lease of real or personal property to a New York State agency must include the payee's identification number, i.e., the seller's or lessor's identification number. The number is either the payee's Federal employer identification number or Federal social security number, or both such numbers when the payee has both such numbers. Failure to include this number or numbers may delay payment. Where the payee does not have such number or numbers, the payee, on his invoice or New York State standard voucher, must give the reason or reasons why the payee does not have such number or numbers..

(B) Privacy Notification. (1) The authority to request the above personal information from a seller of goods or services or a lessor of real or personal property, and the authority to maintain such information, is found in Section 5 of the State Tax Law. Disclosure of this information by the seller or lessor to the State is mandatory. The principal purpose for which the information is collected is to enable the State to identify individuals, businesses and others who have been delinquent in filing tax returns or may have understated their tax liabilities and to generally identify persons affected by the taxes administered by the Commissioner of Taxation and Finance. The information will be used for tax administration purposes and for any other purpose authorized by law. (2) The personal information is requested by the purchasing unit of the agency contracting to purchase the goods or services or lease the real or personal property covered by this contract or lease. The information is maintained in New York State's Central Accounting System by the Director of State Accounts, Office of the State Comptroller, 110 State Street, Albany, New York 12236.

12. **EQUAL EMPLOYMENT OPPORTUNITIES FOR MINORITIES AND WOMEN.** In accordance with Section 312 of the Executive Law, if this contract is: (i) a written Agreement or purchase order instrument, providing for a total expenditure in excess of $25,000.00, whereby a contracting agency is committed to expend or does expend funds in return for labor, services, supplies, equipment, materials or any combination of the foregoing, to be performed for, or rendered or furnished to the contracting agency; or (ii) a written Agreement in excess of $100,000.00 whereby a contracting agency is committed to expend or does expend funds for the acquisition, construction, demolition, replacement, major repair or renovation of real property and improvements thereon; or (iii) a written Agreement in excess of $100,000.00 whereby the owner of a State assisted housing project is committed to expend or does expend funds for the acquisition, construction, demolition, replacement, major repair or renovation of real property and improvements thereon for such project, then:

(a) The Contractor will not discriminate against employees or applicants for employment because of race, creed, color, national origin, sex, age, disability or marital status, and will undertake or continue existing programs of affirmative action to ensure that minority group members and women are afforded equal employment opportunities without discrimination. Affirmative action shall mean recruitment, employment, job assignment, promotion, upgrading, demotion, transfer, layoff, or termination and rate of pay or other forms of compensation;

(b) At the request of the contracting agency, the Contractor shall request each employment agency, labor union, or authorized representative of workers with which it has a collective bargaining or other Agreement or understanding, to furnish a written statement that such employment agency, labor union or representative will not discriminate on the basis or race, creed, color, national origin, sex, age, disability or marital status and that such union or representative will affirmatively cooperate in the implementation of the Contractor's obligations herein; and

(c) The Contractor shall state, in all solicitations or advertisements for employees, that, in the performance of the State contract, all qualified applicants will be afforded equal employment opportunities without discrimination because of race, creed, color, national origin, sex, age, disability or marital status.

Contractor will include the provisions of "a", "b" and "c", above, in every subcontract over $25,000.00 for the construction, demolition, replacement, major repair, renovation, planning or design of real property and improvements thereon (the "Work") except where the Work is for the beneficial use of the Contractor. Section 312 does not apply to: (i) work, goods or services unrelated to this contract; or (ii) employment outside New York State; or (iii) banking services, insurance policies or the sale of securities. The State shall consider compliance by a Contractor or Subcontractor with the requirements of any Federal law concerning equal employment opportunity which effectuates the purpose of this section. The contracting agency shall determine whether the imposition of the requirements of the provisions hereof duplicate or conflict with any such Federal law and if such duplication or conflict exists, the contracting agency shall waive the applicability of Section 312 to the extent of such duplication or conflict. Contractor will comply with all duly promulgated and lawful rules and regulations of the NYS Department of Economic Development's Division of Minority- and Women-Owned Business Development pertaining hereto.

13. **CONFLICTING TERMS.** In the event of a conflict between the terms of the contract (including any and all attachments thereto and amendments thereof) and the terms of this subsection, the terms of this subsection shall control.

14. **GOVERNING LAW.** This contract shall be governed by the laws of the State of New York except where the Federal supremacy clause requires otherwise.

15. **LATE PAYMENT.** Timeliness of payment and any interest to be paid to Contractor for late payment shall be governed by Article XI-A of the State Finance Law to the extent required by law.

16. **NO ARBITRATION.** Disputes involving this contract, including the breach or alleged breach thereof, may not be submitted to binding arbitration (except where statutorily authorized) but must, instead, be heard in a court of competent jurisdiction of the State of New York.

17. **SERVICE OF PROCESS.** In addition to the methods of service allowed by the State Civil Practice Law & Rules ("CPLR"), Contractor hereby consents to service of process upon it by registered or certified mail, return receipt requested. Service hereunder shall be complete upon Contractor's actual receipt of process or upon the State's receipt of the return thereof by the United State Postal Service as refused or undeliverable. Contractor must promptly notify the State, in writing, of each and every change of address to which service of process can be made. Service by the State to the last known address shall be sufficient. Contractor will have thirty (30) calendar days after service hereunder is complete in which to respond.

18. **PROHIBITION ON PURCHASE OF TROPICAL HARDWOODS.** The Contractor certifies and warrants that all wood products to be used under this contract award will be in accordance with, but not limited to, the specifications and provisions of State Finance Law Section 165. (Use of Tropical Hardwoods) which prohibits purchase and use of tropical hardwoods, unless specifically exempted, by the State or any governmental agency or political subdivision or public benefit corporation. Qualification for an exemption under this law will be the responsibility of the contractor to establish to meet with the approval of the State.

In addition, when any portion of this contract involving the use of woods, whether supply or installation, is to be performed by any Subcontractor, the prime Contractor will indicate and certify in the submitted bid proposal that the Subcontractor has been informed and is in compliance with specifications and provisions regarding use of tropical hardwoods as detailed in Section 165 State Finance Law. Any such use must meet with the approval of the State; otherwise, the bid may not be considered responsive. Under bidder certifications, proof of qualification for exemption will be the responsibility of the Contractor to meet with the approval of the State.

19. **PURCHASES OF APPAREL.** In accordance with State Finance Law §162 (4-a), the State shall not purchase any apparel from any vendor unable or unwilling to certify that: (i) such apparel was manufactured in compliance

with all applicable labor and occupational safety laws, including, but not limited to, child labor laws, wage and hours laws and workplace safety laws, and (ii) vendor will supply, with its bid (or, if not a bid situation, prior to or at the time of signing a contract with the State), if known, the names and addresses of each Subcontractor and a list of all manufacturing plants to be utilized by the bidder.

20. CONTRACT TERMINATION PROVISION. The State reserves the right to terminate this contract in the event it is found that the certification filed by the Contractor in accordance with the requirements contained in State Finance Laws §139j and §139k was intentionally false or intentionally incomplete. Upon such finding, the State may exercise its termination right by providing written notification to the Contractor in accordance with the written notification terms of the contract.

(NO TEXT ON THIS PAGE)

NYCDOT AAP 15 FTA

Rev. (1/14)

DESIGNATION OF AFFIRMATIVE ACTION REPRESENTATIVES BY CONTRACTORS/SUBCONTRACTORS

In accordance with Equal Employment Opportunity (EEO) and Disadvantaged Business Enterprise (DBE) Utilization participation requirements of the New York City Department of Transportation contract identified below, the following information shall be furnished by the contractor and all subcontractors prior to approval to work.

1. **Contract No.** _____ **2. County** _____

3. **Contractor:** ☐ or **Subcontractor:** ☐

Name _____

Address _____

City/State/Zip _____

4. **Equal Employment Opportunity Officer:**

Name _____

Title _____

Address _____

City/State/Zip _____

Telephone (____) _____

5. **Contract Site Equal Employment Opportunity Representative:**

Name _____

Title _____

Address _____

City/State/Zip _____

Telephone (____) _____

6. **Disadvantaged/ Minority/Women's Business Enterprise (D/M/WBE) Officer:**

Name _____

Title _____

Address _____

City/State/Zip _____

Telephone (____) _____

7. **Designation Submission:** ☐ Initial ☐ Revised

This form shall accompany DBE pre-award submittals AAPHC 89 to the Contract Compliance Unit.

(NO TEXT ON THIS PAGE)

NYC DOT
AAP10
(01/14)

NYC Department of Transportation
DBE SOLICITATION LOG

Contract No. _____ County _____ Letting Date __/__/____ Date Submitted __/__/____ Page ___ of ___

Contractor Name & Address

_____

_____

Contract Name: _____

E-Mail: _____

Telephone No: ( ) -

	Firm Name Contact	Program	Telephone No. E-Mail Address	NYSDOT Work Code(s)	Date of Contact	Method(s) of Contact	DBE Response Code(s)	Bidder Action Code(s)
1		Select One	( ) -		/ /	Select One		
					/ /	Select One		
					/ /	Select One		
2		Select One	( ) -		/ /	Select One		
					/ /	Select One		
					/ /	Select One		
3		Select One	( ) -		/ /	Select One		
					/ /	Select One		
					/ /	Select One		
4		Select One	( ) -		/ /	Select One		
					/ /	Select One		
					/ /	Select One		
5		Select One	( ) -		/ /	Select One		
					/ /	Select One		
					/ /	Select One		
6		Select One	( ) -		/ /	Select One		
					/ /	Select One		
					/ /	Select One		
7		Select One	( ) -		/ /	Select One		
					/ /	Select One		
					/ /	Select One		
8		Select One	( ) -		/ /	Select One		
					/ /	Select One		
					/ /	Select One		
9		Select One	( ) -		/ /	Select One		
					/ /	Select One		
					/ /	Select One		
10		Select One	( ) -		/ /	Select One		
					/ /	Select One		
					/ /	Select One		

DBE Response Codes 11- Submitted Written Quote 12- Submitted Verbal Quote 13 – Negotiating with prime 14- Developing Quote
21- Not Certified for items(s) 22- Location Unacceptable 23- No Price Agreement 24- No Time for Bid 25- Schedule Unacceptable 26- Other

Bidder Codes: 31- Selected 32- Unavailable 33- No Longer in Business 34- Undeliverable 35- Unreachable 36- Unresponsive 37- Not Selected

(NO TEXT ON THIS PAGE)

NEW YORK CITY
DEPARTMENT OF TRANSPORTATION
DISADVANTAGED BUSINESS ENTERPRISE
SCHEDULE OF UTILIZATION

INSTRUCTIONS

1. The low bidder must complete all appropriate sections of this form as a prerequisite to contract award or to any amendment to approved DBE Utilization.
2. For initial contract award, this form must be accompanied by a completed form AAPHC89 (DBE Utilization Worksheet) for each DBE that will be utilized in the contract.
3. For amendment to an approved award this form must be accompanied by a completed form AAP 89 for any DBE that is to be added to the original utilization plan; and/or by a completed form AAP 89-1 (DBE Utilization Worksheet Amendment) for any DBE whose approved utilization is to be changed.
4. Describe DBE Utilization as one of the following:
   SC - Subcontract Construction TS - Trucking or Services MS - Materials or Supplies *(60% credit applied for MS)
5. The dollar value of utilization for each DBE is the actual amount to be paid to the DBE, not the contract item bid price.

CONTRACT INFORMATION

CHECK ONE: ☐ ___Schedule for Initial Contract Award ☐ ___Schedule for Amending Utilization

Date received in CCU _____

Bidder _____
Address _____
_____
Phone _____
F.E. ID No. _____

Contract No. _____
Fed. Aid Project No. _____
Location (County) _____
Bid Date _____
Total Amt. Bid $ _____
DBE Goal _____ **% x Total Amt. Bid = $** _____

UTILIZATION INFORMATION

DBE UTILIZATION (Firm Name)	Fed. Emp. ID No.	Utilization as (See Instruction 4.)	Dollar Value of Utilization (See Instruction 5.)
			$
			$
			$
			$
			$
			$
			$
			$

TOTAL DBE UTILIZATION = $

Date	Signature	Title

TO BE COMPLETED BY CCU

The Bidder ☐ ___has ☐ ___has not demonstrated good faith efforts to secure DBE utilization in satisfaction of the contract goals as required by the contract specifications.

Date: _____ **Signature:** _____

(NO TEXT ON THIS PAGE)

NEW YORK CITY
DEPARTMENT OF TRANSPORTATION

DBE UTILIZATION WORKSHEET

CONTRACT No.	COUNTY	F. A. PROJECT No.	PAGE No. ___ OF ___	DATE SUBMITTED

CONTRACTOR	SUBCONTRACTOR
NAME	NAME
ADDRESS	ADDRESS
PHONE	PHONE
FED. ID No.	FED. ID No.

The Contractor shall inform the Engineer in Charge the dates when the Subcontractor starts and completes all work under the subcontract. When work performed by the Subcontractor is included in an estimate for payment, labor affidavits, copies of payrolls, etc. are to be submitted in the same manner and number as required of the Prime Contractor.

EST. BEGINNING DATE	EST. COMPLETION DATE
(Mo & Yr)_____/_____	(Mo & Yr)_____/_____

This approval may be rescinded at any time in the progress of the work if work of the Subcontractor is determined unsatisfactory.

No Work may be assigned by the Subcontractor to a second tier Subcontractor. No work may be performed by a Subcontractor other than that specifically approved by the Contract Compliance Director. The signators below agree that violations of the foregoing may result in no payment by the City for the related work.

No work shall be started by the Subcontractor prior to filing the required insurances. The contractor and Subcontractor hereby certify that the subcontract is in writing, and contains all the pertinent provisions of the prime contract in regard to Federal, State, and City Laws and Regulations.

Contractor's Signature	Date	Subcontractor's Signature	Date

	ITEM No.	NAME	< 100 %	BID AMOUNT $ SPECIALTY	BID AMOUNT $ NON-SPECIALTY	AGREED AMOUNT $	% to CNT
1							
2							
3							
4							
5							
6							
7							
8							
9							
		TOTALS:		$	$	$	

The Subcontractor named above is approved for utilization under the DBE General Provisions. Approval of this worksheet conveys only the Department's concurrence in the use of the named subcontractor for the items specified, and application of the DBE Agreed Amount to the participation goals of the contract. CCU approval of an Approval to Subcontract form AAPHC 89 is required prior to subletting or otherwise assigning any part of the contract.

APPROVED FOR OFFICE OF EQUAL OPPORTUNITY DEVELOPMENT AND COMPLIANCE BY:	DATE APPROVED _____/_____/_____

NYCDOT AAPHC 89 FTA (1/14)

NEW YORK CITY
DEPARTMENT OF TRANSPORTATION

DBE UTILIZATION WORKSHEET

New York City Department of Transportation DBE General Provisions requires that prior to contract award , Contractors must obtain written consent of the NYCDOT to a utilization plan that identifies certified disadvantaged owned business enterprises that have committed to perform work on a proposed contract. Authority for approval of utilization has been delegated to the Contract Compliance Unit (CCU). The DBE Utilization Worksheet is used to describe in item detail the utilization plan for each proposed subcontractor.

DBE Provisions require Prime Contractors to obtain written consent of the Department prior to subletting or otherwise assigning any part of the contract. Authority for approval to subcontract has been delegated to the Contract Compliance Unit.

The DBE Utilization Worksheet has been designated for use as form AAPHC 89. When submitting forms for firms included in the Contractor's Utilization Plan, prepare a signed copy as described below. All DBE Utilization Worksheets are to be submitted directly to CCU as attachments to a revised Utilization Plan, form AAP 19.

CONTRACT No.: Enter New York City contract number. (Example: BRC100)

COUNTY: Enter name of county or counties of this project. (Example: Bronx)

F.A. Project No.: Enter only for Federal Aid Projects. (Example: I-87-3(177)

PAGE No.: Enter 1 of 1, 1 of 2, or 2 of 2 etc. Use additional forms as needed.

DATE SUBMITTED: Enter date completed forms are submitted to OCC (MM/DD/YY)

CONTRACTOR AND SUBCONTRACTOR DATA: Enter names, and addresses (including ZIP code), telephone numbers (including area codes) and Federal Identification Numbers for both the Contractor and Subcontractor.

EST. BEGINNING DATE: Enter estimated month and year in which subcontractor work will begin.

EST. COMPLETION DATE: Enter estimated month and year in which subcontractor work will completed.

SIGNATURES: Authorized representatives of both the prime and subcontractor sign and date.

ITEM No. AND NAME: Enter each item or specification number and name. If only part of an item is to be subcontracted check the "less than 100%" box and attach a description of the specific work to be performed.

BID AMOUNT: Enter the prime contractor total bid price for items of work being subcontracted, item by item, under appropriate heading of "Specialty" or Non-Specialty" and enter totals for each "Specialty" items, if any, are designated in the contract proposal. If only part of an item is to be subcontracted enter the amount of the prime contractor bid amount that represents the portion of the item that is being subcontracted: For other than subcontract work, i.e. material supplier and off-site trucking or other services no entry is required under "Specialty" or "Non-Specialty" headings.

DBE ONLY AGREED AMOUNT: In addition to completing the appropriate bid amount columns as described above on the utilization worksheet enter the agreed amount for each item of work to be performed by a certified DBE. Indicate if the contractor's Utilization Plan whether subcontractor, material supplier, trucker or provider of other services

TOTALS: Enter the sum of all Bid Amounts and DBE Agreed Amounts, if any.

Subcontractor Approvals and Approval Amendments will be sequentially numbered for each prime contract in the order that may be approved. An approved copy will be provided to the prime contractor and the Engineer-in-Charge of the contract in each instance.

NEW YORK CITY
DEPARTMENT OF TRANSPORTATION
DBE UTILIZATION WORKSHEET AMENDMENT

CONTRACT No.	COUNTY	F. A. PROJECT No.	PAGE No. ____ OF ____	DATE SUBMITTED

CONTRACTOR	SUBCONTRACTOR
NAME	NAME
ADDRESS	ADDRESS
PHONE	PHONE
FED. ID No.	FED. ID No.

The Contractor shall inform the Engineer in Charge the dates when the Subcontractor starts and completes all work under the subcontract. When work performed by the Subcontractor is included in an estimate for payment, labor affidavits, copies of payrolls, etc. are to be submitted in the same manner and number as required of the Prime Contractor.

EST. BEGINNING DATE	EST. COMPLETION DATE
(Mo & Yr) ____ /____	(Mo & Yr) ____ /____

This approval may be rescinded at any time in the progress of the work if work of the Subcontractor is determined unsatisfactory.

No work may be assigned by the Subcontractor to a second tier Subcontractor. No work may be performed by a Subcontractor other than that specifically approved by the Contract Compliance Director. The signatories below agree that violations of the foregoing may result in no payment by the City for the related work.

No work shall be started by the Subcontractor prior to filing the required insurances. The contractor and Subcontractor hereby certify that the subcontract is in writing, and contains all the pertinent provisions of the prime contract in regard to Federal, State, and City Laws and Regulations.

Contractor' Signature	Date	Subcontractor's Signature	Date

ONLY LIST ITEMS TO BE ADDED, DELETED, INCREASED OR DECREASED: See Instructions.

	ITEM No.	NAME	Previous or New Entry	< 100%	BID AMOUNT $ SPECIALTY	BID AMOUNT $ NON-SPECIALTY	AGREED AMOUNT $	% to CNT
1			PREV					
			NEW					
2			PREV					
			NEW					
3			PREV					
			NEW					
4			PREV					
			NEW					
5			PREV					
			NEW					
	Total all PREV Bid Amounts & D/M/WBE Agreed Amounts:							
	Total all NEW Bid Amounts & D/M/WBE Agreed Amounts:							
	NET TOTAL AMENDMENTS:				$	$	$	

The Subcontractor named above is approved for utilization under the DBE General Provisions. Approval of this worksheet conveys only the Department's concurrence in the use of the named subcontractor for the items specified, and application of the DBE Agreed Amount to the participation goals of the contract. CCU approval of an Approval to Subcontract (Amended) form AAPHC 89-1 is required prior to subletting or otherwise assigning any new work shown on this worksheet.

APPROVED FOR OFFICE OF EQUAL OPPORTUNITY DEVELOPMENT AND COMPLIANCE BY:	DATE APPROVED / /

NYCDOT AAP 89-1 FTA (1/14)
REVERSE

INSTRUCTIONS FOR COMPLETING FORM AAPHC 89-1
DBE UTILIZATION WORKSHEET AMENDMENT

New York City Department of Transportation DBE Provisions requires that prior to contract award; Prime Contractors must obtain written consent of the Department to a utilization plan that identities certified disadvantaged owned business enterprises that have committed to perform work on a proposed contract. Authority for approval of utilization has been delegated to the Contract Compliance Unit (CCU). The DBE Utilization Worksheet is used to describe in item detail the utilization plan for each proposed subcontractor. The DBE Utilization Worksheet Amendment is used to describe in item detail any change (addition, subtraction, increase and/or decrease) to a previously approved worksheet.

DBE Provisions require Prime Contractors to obtain written consent of the Department prior to subletting or otherwise assigning any part of the contract. Authority for approval to subcontract has been delegated to the Contract Compliance Unit.
The DBE Utilization Worksheet Amendment has been designed for use as form AAPHC 89-1, when submitting forms for firms included in the Contractor's Utilization Plan, prepare a signed copy as described below. All DBE Utilization Worksheet Amendments are to be submitted directly to OCC as attachments to a revised Utilization Plan, form AAP 19.

Approval of the Utilization Worksheet Amendment conveys only the Department's concurrence in the use of the named subcontractor for the items specified, and application of the DBE Agreed Amount to the participation goals of the contract.

Only one DBE Utilization Worksheet is to be submitted for each subcontractor on this prime contract. DO NOT submit amendments to the item(s) or amount(s) of work proposed for a subcontractor on another form AAPHC 89. After initial forms have been filed for a given subcontractor, any amendments to the item(s) or amount(s) of work to be performed by this subcontractor will be submitted on form AAPHC 89-1.

Examples: (1) To add or delete items of work and/or increase or decrease the value of an item of work on a previously approved Utilization Worksheet: complete form AAPHC 89-1.

(2) To transfer part of a previously approved Utilization Worksheet from one subcontractor to another previously approved subcontractor: complete two sets of forms AAPHC 89-1. On the first request approval to decrease previously approved value(s) and on the second request approval to increase previously approved value(s).

(3) To transfer part of a previously approved Utilization Worksheet from one subcontractor to a new, not previously approved subcontractor: complete form AAPHC 89-1 and one form AAPHC 89. On the form AAPHC 89-1, request approval to decrease the value of a previously approved subcontract; on the form AAPHC 89, request approval to execute an entirely new subcontract with a new subcontractor.

AN AMENDMENT THAT REDUCES THE UTILIZATION OF AN APPROVED DBE MUST BE ACCOMPANIED BY SUPPORTING DOCUMENTATION (i.e.. a letter of unavailability from the DBE).

CONTRACT NO.: Enter NYC contract number. Example: BRC100

COUNTY: Enter name of county or counties. Example: Manhattan & Brooklyn

F.A. PROJECT No.: Enter only for Federal-Aid projects. Example: I-87-3(177)

NYCDOT AAP 21LL (FTA)

NYC Department of Transportation
Contractor Report of Contract Payments

Final Report	PIN & Contract #	County	Report Date
☐ Yes ☐ No			

Contractor Name and Address	Subcontractor/Vendor Name and Address
	☐ Check if firm is CERTIFIED D/M/WBE
Contractor Federal Identification Number	**Subcontractor/Vendor Federal Identification Number**

Total Payments Due to Date:	
- Withholding to Date:	
= Total Payments to Date:	

Comments:

Certification

Section 139-f of the State Finance Law requires the contractor to pay each of its subcontractors and/or material supplier the proceeds from the payment representing the value of work performed and/or materials furnished by the subcontractor and/or material supplier within 7 calendar days of the receipt of any payment from the public owner.

As an officer or the Contractor identified above, and based on my personal knowledge, I certify that payment has been made by the Contractor to the Subcontractor/Vendor in the amount herein, and that said work/services/product was performed/supplied by said Subcontractor/Vendor and that there were no rebates, refunds, or offsets applied to any payments except as noted under "Comments" above and a copy of this form has been sent to the Subcontractor/Vendor.

Signed: _____

Title: _____

(For Contractor)

PAYMENT CERTIFICATION

As an officer of the Subcontractor/Vendor identified above, and based on my personal knowledge, I certify that payment has been received in the amount stated herein, and that said work/services/product was performed/supplied and supervised solely by the Subcontractor/Vendor and that there were no rebates, refunds, or offsets applied to any payments except as noted under "Comments" above.

Signed: _____

Title: _____

(For Subcontractor/Vendor)

Notarization

Sworn before me this _____

Day of _____, _____

_____

Notary Public

Sworn before me this _____

Day of _____, _____

_____

Notary Public

Any person who makes a false or fraudulent statement in connection with participation of a DBE on any assisted program or otherwise violates applicable State and/or Federal statutes may be referred for prosecution under applicable State and/or Federal law.

Note to Subcontractor: If the Contractor has not paid your firm for the work completed and accepted by the Project Sponsor in accordance with the terms specified on this form, please contact the Engineer in Charge for the contract.

NYCDOT AAP 21LL (FTA) Form Instructions:

Final Report: Check YES or NO, as appropriate, to indicate whether this will be the Final Report submitted for this vendor.

Contract No: Enter NYC DOT PIN (Project Identification Number) and Local Project contract number.

County: Enter the name of the county or counties this project is located in.

Report Date: Enter date (Month/Day/Year) through which payments due and made are reflective of.

Contractor and Vendor Data: Enter names, and addresses (including zip code), Telephone numbers (including area codes) and Federal Identification Numbers for both the Contractor and Vendor.

Total Payments Due to Date: Enter total of payments due to the vendor to date.

Withholding to Date: Enter amount due vendor that has not been paid. Any withholding must be explained in the Comments section.

Total Payment to Date: Value of payments due to date less withholding.

Comments: Amounts recorded as withholding must be accompanied by a brief description of the circumstances necessitating the withholding along with item numbers involved (if any). If there is not enough space, then attach a letter of explanation to this form.

Signatures: Authorized representatives of both the Prime Contractor and Subcontractor/Vendor sign and date.

Notarization: The signatures must be notarized by a duly registered Notary Public.

The AAP 21LL is a cumulative to-date report of the total payments due a vendor, total withholdings, and total payments made to the vendor. The AAP 21LL is to be submitted and notarized by the 15th day of the following month to the Regional Local Project Liaison (RLPL) for each vendor due payment during the previous month or when requested by the Project Sponsor or the NYC Department of Transportation. The dollar values on this report should be accurate through the last day of the previous month. The Final AAP 21LL should be submitted as soon as possible after the vendor has completed/supplied all of the work/service/products for which it was utilized, but not later than 30 days after the vendor/subcontractor has completed its commitment.

The Prime Contractor shall submit a copy of the AAP 21LL signed by an authorized representative of their firm, to the Sponsor and to each vendor due payment on the project.

The Prime Contractor shall inform the Vendor of its responsibility to review the form for accuracy, to sign and return the form to the Sponsor, and to have the Vendor's signature on the AAP 21LL.

This report is a written instrument within the meaning of Section 175.00 of the Penal law. I am fully aware that it will be filed with the New York City Department of Transportation and become a part of the records thereof and that entering any false information hereon constitutes the crime of offering a false instrument for filing in the first degree, which is a Class E Felony. (Penal Law, Section 175.35)

AAP 22
(12/08)

PRE-AWARD D/M/WBE MATERIAL SUPPLIER COMMITMENT INFORMATION

A Low Bidder that submits a D/M/WBE Utilization Pre-Award Package that includes amount(s) for Material Supply must complete this form to show how the commitment amount was determined.

Contract D _____ _____ County

Material Supplier: _____

Address: _____

Material Work Code / Type of Material: _____ / _____

Associated Contract Pay Item (3 digit core as a minimum): _____

Commitment Amount: _____

Are these Item(s) ☐ Stockpiled or ☐ Special Ordered?

If Special Order, does the Manufacturer also sell these items on a retail basis? ☐ Yes ☐ No

Will the Materials be delivered to the Contract site? ☐ Yes ☐ No

If Yes, who will deliver the Materials?

☐ Material Supplier ☐ Manufacturer ☐ Delivery / Mail Service

Who will pay for Materials / Supplies? ☐ Contractor ☐ _____

Who negotiated the cost of the Supplies? ☐ Contractor ☐ _____

Notes / Comments:

_____

_____

_____

_____

_____

_____

(NO TEXT ON THIS PAGE)

PRE-AWARD DBE TRUCKING COMMITMENT INFORMATION

Contract No.	PIN

Project Sponsor	County

Supervisor of the day-to-day DBE trucking operation is:

DBE Trucking Firm:			
	Owned	Leased	Total
No. of Trucks			0

Number of Trucks Performing Work	Rate ($)	Per	Duration/No.	Commitment ($)
On-Site				$0.00
Off-Site				$0.00
TOTAL				**$0.00**

DBE Trucking Firm:			
	Owned	Leased	Total
No. of Trucks			0

Number of Trucks Performing Work	Rate ($)	Per	Duration/No.	Commitment ($)
On-Site				$0.00
Off-Site				$0.00
TOTAL				**$0.00**

DBE Trucking Firm:			
	Owned	Leased	Total
No. of Trucks			0

Number of Trucks Performing Work	Rate ($)	Per	Duration/No.	Commitment ($)
On-Site				$0.00
Off-Site				$0.00
TOTAL				**$0.00**

NOTE: A Low Bidder that submits a DBE Utilization Pre-Award Package that includes amount(s) for trucking, must complete this form to show how the commitment amount was estimated. For any long-term leased truck, submit a copy of the lease agreement. Rate should be stated as $/day, $/hour, $/load, etc. and estimated duration/number of loads. (i.e., 1 truck @ $400/day for 3 weeks = $6,000)

(NO TEXT ON THIS PAGE)

New York City Department of Transportation
SUBCONTRACTOR/ CONSULTANT PROFILE FORM

☐ Initial ☐ Revised ☐ Final

DOT Project Manager:

CONTRACT INFO

Type: ☐ Construction ☐ Professional Services ☐ Standard Services

Funding: ☐ FHWA ☐ FTA ☐ STATE ☐ CITY

Unit/ Division: _____

Contract No.: _____

Contract Reg. No.: _____

Procurement Id No. (PIN): _____

Contract Value: _____

Over All Minority Goal: _____ % MWBE ____ % DBE

PRIME INFO

Name: _____

Address: _____

_____

Phone: _____

Fax: _____

EIN: _____

E-Mail: _____

_____ % MBE (NYS) _____ % WBE (NYS)

Contract Description:

SUBCONTRACTOR INFO

☐ Subcontractor ☐ Subconsultant ☐ Material Supplier ☐ Trucking Services ☐ Fabricator ☐ Standard Services

☐ Yes ☐ No Has a Registered Apprenticeship Program. If Yes, Please attached supporting documentation.

☐ Yes ☐ No Has Required Licenses. If Yes, Please attached supporting documentation.

Subcontract Value: _____ Start Date: _____ End Date: _____

Name: _____

Address: _____

_____

Phone: _____

Fax: _____

EIN: _____

E-Mail: _____

CERTIFIED AS

☐ MBE (NYC) ☐ WBE (NYC) ☐ MBE (NYS) ☐ WBE (NYS)

☐ DBE ☐ LBE ☐ Non-Profit

CHECK APPROPRIATE BOX *(*Only if one of the above has been selected)*

☐ Black* ☐ Hispanic* ☐ Asian/Pacifc Islander*

☐ Asian/Pacific American* ☐ Native American Indian*

☐ Subcont. Asian American* ☐ Alaskan Native*

☐ Non-Minority ☐ Other* (Explain)

Subcontract Description:

Prime Contractor Certification

I hereby affirm that the information supplied is true and correct.

Print Name: _____ Title: _____ Signature: _____ Date: _____

Submit Completed Form To: NYC-DOT/ Contract Compliance Unit/ 55 Water Street - Rm: 825, New York, NY 10041-0004
Attn: Charles Bartolotta/ cbartolotta@dot.nyc.gov

Agency - CCU Director Preliminary Review

Completed By: _____ Date: _____

☐ 1. Apprenticeship ☐ 2. Licenses

Agency - VRU Director Preliminary Review

Completed By: _____ Date: _____

☐ 3. Vendex ☐ 4. Employment ☐ 5. References

Final Agency Approval

Signature: _____ Date: _____ ☐ APPROVED ☐ NOT APPROVED

*** VRU DO NOT FORWARD SUPPLIERS/ TRUCKING PROFILE FORMS TO CMU.**

FMS - Contract Management Unit

FMS Entered By: _____ Print Name _____ Signature _____ Date

(rev. 5/13/11)

INSTRUCTIONS

- Prime Contractor must complete this form.
- A Subcontractor Profile Form must be completed for EACH Subcontractor that will perform work or supply material on the contract. Make additional copies of this form as needed.
- Please indicate if the form is the Initial, Revised or Final submission.
- Please indicate the name of the DOT Project Manager for this contract.

Contract Info:

Type: Indicate Industry type as one of the following: Construction, Professional Services or Standard Services.
Funding: Indicate contract funding: FHWA, FTA, State, or City (MWBE and Non-MWBE).
Unit/ Division: Specify unit or division letting this contract. i.e. Bridges/ Traffic/ Ferries, etc.
Contract No.: Enter New York City Contract No. as appropriate.(Example: BRC100)
Contract Registration No.: If known, enter the Registration No. assigned to this contract.
Procurement Id No. (PIN): Enter New York City PIN No. as appropriate. (Example: 84109MBSA000)
Contract Value: Enter the Total Agreed Amount of the Proposed Contract Agreement between the Prime Contractor and the Agency for this project.
Over All Minority Goal: Enter minority percentage goal required for this contract.
MWBE / DBE: Enter minority requirement on this contract.
Contract Description: Enter project description.

Prime Info:

CONTRACTOR: "Contractor" means a person, including a vendor, who is a party or a proposed party to a contract with a contracting agency, first-level subcontractors of supply and service contractors, and all levels of subcontractors of construction.
Name: Enter the legal name of the Prime's firm.
Address: Enter current business address.
Phone: Enter current business phone number or a number where business representatives can be located.
Fax: Enter business fax number.
EIN: Enter legal Employer Identification Number (EIN).
E-mail: Enter e-mail address, if any.

Subcontractor Info:

Describe utilization as one of the following: **Subcontractor, Sub consultant, Material Supplier, Trucking Services, Fabricator or Standard Services.**
Registered Apprenticeship Program: Prime Contractor must indicate if Subcontractor has a Registered Apprenticeship Program. A Subcontractor in the Construction field with a contract exceeding 1M must have a Registered Apprenticeship Program in place. Subcontractors must get a letter from the Union indicating that they are signatory contractors to their unions for the trades that they intend to use on this project and that they have a Registered Apprenticeship Program with NYSDOL.
Licenses: Prime Contractor must indicate wheather or not a License is required for work of Subcontractor. If so, document that the Subcontractor has all required Licenses. **Please attached License Certificate.**
Subcontract Value: Enter the Total Agreed Amount of the Proposed Contract Agreement between the Prime Contractor and the Subcontractor for this project.
Start Date: Enter estimated date on which subcontractor work will begin.
End Date: Enter estimated date on which subcontractor work will be completed.
Name: Enter the legal name of the Subcontractor's firm.
Address: Enter current business address.
Phone: Enter current business phone number or a number where business representatives can be located.
Fax: Enter business fax number.
EIN: Enter legal Employer Identification Number (EIN) number.
E-mail: enter e-mail address, if any.
Certified As: Indicate what type of Minority Certification and Ethnic Group Designation the Subcontractor has, if any.
Check Appropriate Box: Ethnicity requirements apply **only** to **minority** subcontractors, subconsultants, material suppliers and trucking firms for reporting purposes to the NYC Small Business Services, Mayors Office of Contract Services and the Federal-Aid Construction Programs Contract Compliance Monitoring and Reporting.
Subcontract Description: Describe work to be perform by Subcontractor/ Subconsultant.
i.e. (Fencing, Painting, Construction or Construction Management Services, Trucking, Towing Services, Tree Pruning/Planting)

Prime Contractor Certification:

Enter Name, Title, Signature, and Date of completion of this form by the Company Official.

Submit Completed Form To:

NYC-DOT/ Contract Compliance Unit

55 Water Street - 8th Floor
New York, NY 10041-0004
Attn: Charles Bartolotta
cbartolotta@dot.nyc.gov

CITY OF NEW YORK
INITIAL LIST OF SUBCONTRACTORS ("INITIAL LOS")
Page 1 of __

Directions: **For all contracts for which a utilization plan has been submitted pursuant to Local Law 129 of 2005, the contractor must use this form to indicate a list of persons to which it intends to award subcontracts to within the first 12 months following receipt of the Notice to Proceed ("NTP"). The contractor is required to submit this form within 30 days of the contracting agency's issuance of the NTP. Each page should be signed and certified. Attach additional pages (copies of this page), as needed.**

PRIME CONTRACT INFORMATION

Agency:	Unit/Division:	
FMS Contract No.:	PIN:	
Contract Value: $	Registration Date:	
Contract Description:		

PRIME CONTRACTOR IDENTIFICATION

Name:		
Phone:	Fax:	
Address:	City	State/Zip:
EIN/SSN:	E-Mail:	

SUBCONTRACTOR #1 INFORMATION

Name:		
Phone:	Fax:	
Address:	City	State/Zip:
EIN/SSN:	E-Mail:	
Subcontract Description:		
Approximate Subcontract Value: $	Approx. Start Date:	Approx. End Date:
Contractor is DSBS-certified as: M/WBE ☐ EBE ☐ LBE ☐ DBE ☐ (check all that apply and note status) N/A ☐		

SUBCONTRACTOR #2 INFORMATION

Name:		
Phone:	Fax:	
Address:	City	State/Zip:
EIN/SSN:	E-Mail:	
Subcontract Description:		
Approximate Subcontract Value: $	Approx. Start Date:	Approx. End Date:
Contractor is DSBS-certified as: M/WBE ☐ EBE ☐ LBE ☐ DBE ☐ (check all that apply and note status) N/A ☐		

SUBCONTRACTOR #3 INFORMATION

Name:		
Phone:	Fax:	
Address:	City:	State/ZIP:
EIN/SSN:	E-Mail	
Subcontract Description:		
Approximate Subcontract Value: $	Approx. Start Date:	Approx. End Date:
Contractor is DSBS-certified as: M/WBE ☐ EBE ☐ LBE ☐ DBE ☐ (check all that apply and note status) N/A ☐		

Prime Contractor Certification: I hereby affirm that the information supplied is true and correct.

Signature:	Title:
Print Name:	Date:

CITY OF NEW YORK
INITIAL LIST OF SUBCONTRACTORS ("INITIAL LOS")
Page 2 of __

Directions: **For all contracts for which a utilization plan has been submitted pursuant to Local Law 129 of 2005, the contractor must use this form to indicate a list of persons to which it intends to award subcontracts to within the first 12 months following receipt of the Notice to Proceed ("NTP"). The contractor is required to submit this form within 30 days of the contracting agency's issuance of the NTP. Each page should be signed and certified.**

PRIME CONTRACT INFORMATION		
Agency:	Unit/Division:	
FMS Contract No.:	PIN:	
Contract Value: $	Registration Date:	
Contract Description:		

PRIME CONTRACTOR IDENTIFICATION		
Name:		
Phone:	Fax:	
Address:	City	State/Zip:
EIN/SSN:	E-Mail:	

SUBCONTRACTOR #4 INFORMATION		
Name:		
Phone:	Fax:	
Address:	City	State/Zip:
EIN/SSN:	E-Mail:	
Subcontract Description:		
Approximate Subcontract Value: $	Approx. Start Date:	Approx. End Date:
Contractor is DSBS-certified as: M/WBE ☐ EBE ☐ LBE ☐ DBE ☐ (check all that apply and note status) N/A ☐		

SUBCONTRACTOR #5 INFORMATION		
Name:		
Phone:	Fax:	
Address:	City	State/Zip:
EIN/SSN:	E-Mail:	
Subcontract Description:		
Approximate Subcontract Value: $	Approx. Start Date:	Approx. End Date:
Contractor is DSBS-certified as: M/WBE ☐ EBE ☐ LBE ☐ DBE ☐ (check all that apply and note status) N/A ☐		

SUBCONTRACTOR #6 INFORMATION		
Name:		
Phone:	Fax:	
Address:	City:	State/ZIP:
EIN/SSN:	E-Mail	
Subcontract Description:		
Approximate Subcontract Value: $	Approx. Start Date:	Approx. End Date:
Contractor is DSBS-certified as: M/WBE ☐ EBE ☐ LBE ☐ DBE ☐ (check all that apply and note status) N/A ☐		

Prime Contractor Certification: I hereby affirm that the information supplied is true and correct.

Signature:	Title:
Print Name:	Date:

New York City Department of Transportation

SUBCONTRACTOR / SUBCONSULTANT MONTHLY PAYMENT REPORT

CONTRACT No./ PIN No.: _____ **Page No.:** _____ **of** _____

REGISTRATION No.: _____ **MONTH:** _____

PRIME CONTRACTOR: _____ **Work Completed To Date:** _____ %

SUBCONTRACTOR'S NAME / SUBCONSULTANT'S NAME	Certification (DBE, MBE, WBE, LBE, None)	Contract Value	Total Payments This Month	Total Payments To Date
TOTAL:				

REMARKS:

FALSIFICATION OF THIS STATEMENT IS A PUNISHABLE OFFENSE

I certify that the total payments above reflect the value of the work done by the subcontractors/subconsultants that payments have been made by the Contractor and received by the Subcontractor /Subconsultant as specified above; that there were no Rebates, Refunds or Offsets applied to any payments unless the same is noted above; and that it is known to me to be true of my knowledge.

PRIME CONTRACTOR'S / CONSULTANT'S NAME _____ **DATE**

PRINT NAME _____ **TITLE**

(Rev: 02/10)

INSTRUCTIONS FOR PREPARING AND SUBMITTAL OF SUBCONTRACTOR / SUBCONSULTANT PAYMENT REPORTS

New York City Department of Transportation requires Prime Contractors / Consultants to report payments made to ALL SUBCONTRACTORS / SUBCONSULTANT that are utilized on city contracts. Prime Contractor/ Consultant report of payments to ALL SUBCONTRACTORS / SUBCONSULTANTS is required on a ***monthly basis*** *or when requested by the Department. Failure by the Prime Contractor / Consultant to submit this report to the Department's Project Engineer-In-Charge or directly to Contract Compliance Office as directed and in accordance with the above may result in the withholding of payments.*

Prepare one report per contract and list ALL subcontractors / subconsulants employed on this project regardless of payments.

PAGE No.: Enter 1 of 1; 1 of 2; 2 of 2; etc. Use additional forms as needed.

CONTRACT No.: Enter New York City Contract No. or PIN No. as appropriate.
(Example: BRC100 or 84109MBSA000)

REGISTRATION No.: Enter the Registration No. assigned to this contract. This may be obtained from the "Notice of Award" and/ or the "Order to Commence Work" letters.

MONTH: Enter month to which payment amounts refer.

PRIME CONTRACTOR / CONSULTANT: Enter the legal name of the Prime's firm.

WORK COMPLETED TO DATE: Enter the percentage of work **completed to date** in relation to the life of the contract.

SUBCONTRACTOR: Enter names of ALL Subcontractors employed by your firm that utilized on this project.

SUBCONSULTANT: Enter names of ALL Sub consultants employed by your firm that utilized on this project.

CERTIFICATION: Indicate what type of minority certification the Subcontractor/ Subconsultant has if any. Otherwise indicate "None". Do not leave it blank.

CONTRACT VALUE: For each Subcontractor / Subconsultant enter the Total Agreed Amount of the Proposed Contract Agreement between the Prime Contractor and the Subcontractor for this project.

TOTAL PAYMENTS THIS MONTH: Enter total Payments made to Subcontractor / Subconsultant for the indicated month.

TOTAL PAYMENTS TO DATE: Total Value of **Actual** Payments to Date, amount shown will be Total Payments Due less Retainage or Other Withholding, if any.

REMARKS: Prime Contractor / Consultant must indicate any monies under dispute or the subject of exceptions or withholdings; and a brief description of the circumstances leading to the dispute or exception.

SIGNATURE: Authorized representative of the Prime Contractor / Consultant must sign and date form.

NEW YORK CITY DOT

AGENCY CHIEF CONTRACTING OFFICE
CIVIL RIGHTS COMPLAINT FORM

Today's Date: 2/28/2012

COMPLAINANT

Name	**Telephone # - Home** ☐ **Office** ☐ **Mobile** ☐
Address	**Email**
City/State/Zip	**Complaint received through** ☐ Telephone ☐ Email ☐ letter ☐ In-Person

COMPLAINT AGAINST

Name	**Telephone # - Home** ☐ **Office** ☐ **Mobile** ☐
Address	**PIN**
City/State/Zip	**Registration #**
Relationship to Complainant	

DESCRIPTION OF COMPLAINT

(Over)

NATURE OF COMPLAINT *(check all that apply)*

☐ Harassment ☐ Intimidation ☐ Threats ☐ Coercion ☐ Other _____
(explain)

If you have checked any of the above, please indicate the basis of the civil rights violation below.

☐ Race ☐ Disability ☐ Age ☐ Ethnicity ☐ Sexual Orientation ☐ Retaliation for Filing a Complaint
☐ Gender ☐ National Origin ☐ Religion ☐ Title VI – Refer to Title VI Officer

☐ Other: _____
(explain)

INTAKE	
Name	Title
Signature	Date

RESOLUTION

ATTACHMENTS

CITY OF NEW YORK
ANNUAL LIST OF SUBCONTRACTORS ("ANNUAL LOS")
Page 1 of ___

Directions: **For all multi-year contracts for which a utilization plan has been submitted pursuant to Local Law 129 of 2005, the contractor must use this form annually to indicate a list of persons to which it intends to award subcontracts to during each twelve month period following the initial year of the contract term. Each page should be signed and certified. Attach additional pages (copies of this page), as needed.**

PRIME CONTRACT INFORMATION		
Agency:	Unit/Division:	
FMS Contract No.:	PIN:	
Contract Value: $	Registration Date:	
Contract Description:		

PRIME CONTRACTOR IDENTIFICATION		
Name:		
Phone:	Fax:	
Address:	City	State/Zip:
EIN/SSN:	E-Mail:	

SUBCONTRACTOR #1 INFORMATION		
Name:		
Phone:	Fax:	
Address:	City	State/Zip:
EIN/SSN:	E-Mail:	
Subcontract Description:		
Approximate Subcontract Value: $	Approx. Start Date:	Approx. End Date:
Contractor is DSBS-certified as: M/WBE ☐ EBE ☐ LBE ☐ (check all that apply and note status) N/A ☐		

SUBCONTRACTOR #2 INFORMATION		
Name:		
Phone:	Fax:	
Address:	City	State/Zip:
EIN/SSN:	E-Mail:	
Subcontract Description:		
Approximate Subcontract Value: $	Approx. Start Date:	Approx. End Date:
Contractor is DSBS-certified as: M/WBE ☐ EBE ☐ LBE ☐ (check all that apply and note status) N/A ☐		

SUBCONTRACTOR #3 INFORMATION		
Name:		
Phone:	Fax:	
Address:	City:	State/ZIP:
EIN/SSN:	E-Mail	
Subcontract Description:		
Approximate Subcontract Value: $	Approx. Start Date:	Approx. End Date:
Contractor is DSBS-certified as: M/WBE ☐ EBE ☐ LBE ☐ (check all that apply and note status) N/A ☐		

Prime Contractor Certification: I hereby affirm that the information supplied is true and correct.	
Signature:	Title:
Print Name:	Date:

CITY OF NEW YORK
ANNUAL LIST OF SUBCONTRACTORS (" ANNUAL LOS")
Page 2 of__

Directions: **For all multi-year contracts for which a utilization plan has been submitted pursuant to Local Law 129 of 2005, the contractor must use this form annually to indicate a list of persons to which it intends to award subcontracts to during each twelve month period following the initial year of the contract term. Each page should be signed and certified. Attach additional pages (copies of this page), as needed.**

PRIME CONTRACT INFORMATION		
Agency:	Unit/Division:	
FMS Contract No.:	PIN:	
Contract Value: $	Registration Date:	
Contract Description:		

PRIME CONTRACTOR IDENTIFICATION		
Name:		
Phone:	Fax:	
Address:	City	State/Zip:
EIN/SSN:	E-Mail:	

SUBCONTRACTOR #4 INFORMATION		
Name:		
Phone:	Fax:	
Address:	City	State/Zip:
EIN/SSN:	E-Mail:	
Subcontract Description:		
Approximate Subcontract Value: $	Approx. Start Date:	Approx. End Date:
Contractor is DSBS-certified as: M/WBE ☐ EBE ☐ LBE☐ (check all that apply and note status) N/A☐		

SUBCONTRACTOR #5 INFORMATION		
Name:		
Phone:	Fax:	
Address:	City	State/Zip:
EIN/SSN:	E-Mail:	
Subcontract Description:		
Approximate Subcontract Value: $	Approx. Start Date:	Approx. End Date:
Contractor is DSBS-certified as: M/WBE ☐ EBE ☐ LBE☐ (check all that apply and note status) N/A☐		

SUBCONTRACTOR #6 INFORMATION		
Name:		
Phone:	Fax:	
Address:	City:	State/ZIP:
EIN/SSN:	E-Mail	
Subcontract Description:		
Approximate Subcontract Value: $	Approx. Start Date:	Approx. End Date:
Contractor is DSBS-certified as: M/WBE ☐ EBE ☐ LBE☐ (check all that apply and note status) N/A☐		

Prime Contractor Certification: I hereby affirm that the information supplied is true and correct.	
Signature:	Title:
Print Name:	Date:

ATTACH TO CONTRACT DOCUMENTS

THE CITY OF NEW YORK
DEPARTMENT OF DESIGN AND CONSTRUCTION
INFRASTRUCTURE DIVISION
BUREAU OF DESIGN

PROJECT ID: HWMM008

SAFETY AND STREETSCAPE IMPROVEMENTS
EAST 86TH STREET BETWEEN PARK AVENUE AND SECOND AVENUE

SCHOOL SAFETY NECKDOWNS
MADISON AVENUE BETWEEN EAST 84TH STREET AND EAST 85TH STREET

INCLUDING WATER MAIN, STREET LIGHTING, AND TRAFFIC SIGNAL WORK

Together With All Work Incidental Thereto

BOROUGH OF MANHATTAN
CITY OF NEW YORK

ADDENDUM NO. 3

DATED: March 23, 2009

This Addendum is issued for the purpose of amending the requirements of the Contract Documents and is hereby made part of said Contract Documents to the same extent as if it was originally included therein.

GAS COST SHARING (EP-7) STANDARD SPECIFICATIONS

EP-7 GAS COST SHARING
STANDARD SPECIFICATIONS

TABLE OF CONTENT

I - NOTICE TO ALL BIDDERS; GAS COST SHARING WORK

II - GENERAL PROVISIONS; GAS COST SHARING WORK

1. General
2. Gas Interferences And Accommodations
   2a. Water Main Accommodations
   2b. Sewer Accommodations
3. Quantity Overruns, EP-7 Funded Bid Items
4. Changes And Extra Work
5. Excavation
6. Backfilling And Street Restoration
7. Non-Responsive Bids
8. Minimum Clearances
9. Work By Facility Operator
10. Materials Furnished By Facility Operator
11. Liability And Insurance
12. Width And Depth Of Excavation
13. Depth And Crossing Angles Of Gas Facilities
14. Maintenance Of Traffic For Gas Work
15. Relocated Gas And Temporary Systems Installation
16. Role Of Company Inspector
17. Coordination With Gas Company

III - TECHNICAL SECTION

SECTION 6.01 - Trench Crossings; Support And Protection Of Gas Facilities And Services.
SECTION 6.02 - Extra Excavation For The Installation Of Catch Basin Sewer Drain Pipes With Gas Interferences.
SECTION 6.02.1 - Extra Excavation For The Installation Of Catch Basin Sewer Drain Pipes With Upstream Inverts Greater Than Six (6) Feet.
SECTION 6.03 - Removal Of Abandoned Gas Facilities. All Sizes.
SECTION 6.03.1 - Removal Of Abandoned Gas Facilities With Possible Coal Tar Wrap. All Sizes. (For National Grid Work Only)
SECTION 6.03.1a - Removal Of Abandoned Gas Facilities With Possible Coal Tar Wrap. All Sizes. (For Con Edison Work Only)
SECTION 6.04 - Adjust Hardware To Grade Using Spacer Rings/Adaptors. (Street Repaving.)
SECTION 6.05 - Adjust Hardware To Grade By Resetting. (Road Reconstruction.)
SECTION 6.06 - Special Care Excavation And Backfilling.
SECTION 6.07 - Test Pits For Gas Facilities.

IV - STANDARD SKETCHES; GAS COST SHARING WORK

NO. 1 - Support Requirements For Gas Mains And Services Crossing Excavation Greater Than 4'-0" Wide At Any Angle
NO. 1A - Support Requirements For Gas Mains Over 16" Diameter Up To And Including 48" Diameter Crossing Excavation At Any Angle
NO. 2 - Typical Methods Of Measurement For Gas Crossings
NO. 3 - Utility Crossings During Catch Basin Chute Connection Pipe Installation
NO. 4 - Utility Crossings During Catch Basin Chute Connection Pipe Installation (Extra Depth)
NO. 5 - Gas Main Encroachment On And/Or Parallel To Excavation Of Unsheeted Trench

V - PRELIMINARY GAS WORK TO BE PERFORMED BY FACILITY OPERATOR

VI - LISTING OF APPROXIMATE LOCATIONS OF EP-7 BID ITEMS QUANTITIES

I - NOTICE TO ALL BIDDERS; GAS COST SHARING WORK

All prospective bidders are hereby advised that, pursuant to the "Gas Facility Cost Allocation Act", ("the Act"), the City of New York has entered into an agreement ("the Agreement") with the gas companies (Con Edison or National Grid (formerly KeySpan Energy Delivery)) operating in their respective areas of the City to "share" the cost of facility relocation and/or support and protection of facilities disturbed by proposed water and/or sewer and related City work specified in this contract. Therefore, bid items, specifications and estimated quantities for the incremental costs of support and protection of certain gas facilities have been included in this contract. The low bid for this contract shall be determined by examining each bid for all work to be performed under this contract including any work of support and protection of gas facilities to be performed. The Contractor shall not seek additional compensation from gas companies except as specifically set forth in its contract.

II - GENERAL PROVISIONS; GAS COST SHARING WORK

1. General:

The Contractor shall perform City work with interferences from existing live and abandoned gas facilities. This shall be defined as utility work. Therefore, this contract include bid items, specifications and estimated quantities designed to fully compensate him/her for the incremental costs of supporting, protecting, provide accommodations and, avoid disturbing gas facilities located in the streets shown on the contract drawings. In the event that any other provisions of this contract related to gas facilities (or private utilities) conflict with these provisions, these provisions shall supersede and govern all work related to gas facilities owned by the companies operating in the project area. All utility work, as defined in these specifications, including changes and additions thereto shall be paid solely by the City except when specified otherwise in this contract. Contractor hereby agrees that the facility operator shall not be liable to pay him/her for any work performed including extra utility work. Contractor agrees that its bid prices include all compensation for loss of productivity and efficiency, idle time, delays (including any delays occasioned by negotiation of a contract change), change in operations, mobilization, demobilization, remobilization, added cost or expense, lost of profit, other damages or impact costs that may be suffered by or because of utility work, or the presence of gas facilities in the proximity of City work and that it will not seek additional compensation for these items. All disputes shall be resolved as specified in the contract.

Pursuant to the Act, Agreement, and the New York City Administrative Code, the gas company(ies) has been directed by the Commissioner and is required to perform all maintenance, repairs, replacement, shifting, alteration, relocation, and/or removal work that are not part of this contract. By having bid on this contract, the Contractor understands and agrees that the Commissioner has preasserted any right the City has to require, including the issuance of any directives or so called "order outs" under the New York City Administrative Code, any or all gas companies to maintain, repair, replace, protect, support, shift, alter, relocate, and/or remove all gas facilities that are about to be disturbed by the City contract work. The issuance of additional such directives during the performance of the contract work, where necessary in the sole judgment of the Commissioner, shall be initiated by such Commissioner as set forth in the relevant sections of the Act and Agreement. Contractor further agrees to insert such requirements as set forth herein above into any contracts with its approved subcontractors so that its subcontractors also understand and agree to such contract requirements.

2. Gas Interferences And Accommodations:

During the performance of sewer and water main work funded by the New York City Department of Environmental Protection (NYCDEP), as instructed by the Engineer, the use of any applicable contract bid item is allowed in order to resolve and accommodate all gas facilities interferences with such City work, including the removal of contaminated soil in associated trench excavation. This is in addition to the specified EP-7 bid items in the contract. Payment for such accommodation shall be funded by EP-7 bid item "UTL-GCS-2WS - GAS INTERFERENCES AND ACCOMMODATIONS" (F.S. Fixed Sum). The value of such accommodation shall be computed by multiplying the appropriate unit prices bid to the

quantity of work performed, as determined by the Engineer, and applying the total amount thus to be paid to EP-7 bid item "UTL-GCS-2WS - GAS INTERFERENCES AND ACCOMMODATIONS". When EP-7 bid item "UTL-GCS-2WS - GAS INTERFERENCES AND ACCOMMODATIONS" does not exist, such additional accommodation work shall be at no cost to the City but shall be a matter of adjustment between gas facility operator and Contractor. Private facilities, other than gas, that become in interference due to gas interferences accommodations shall also be accommodated, if so directed by the Resident Engineer, at no additional cost to the City and, provided that its owner agrees to be responsible for all additional costs to Contractor, otherwise, such facility shall be ordered by the City to be maintained, shifted, relocated or replaced by its owner at his/her expenses.

2a. Water Main Accommodations:

When water main construction is to be performed in this contract, Contractor shall be required, if warranted by field conditions, and at locations designated by the Resident or Borough Engineer, to change the vertical or horizontal alignment of water mains including but not limited to all additional labor, material, work method accommodations, furnishing, delivering and laying offset fittings and pipes, etc., necessary in order to complete water main installation and, avoid gas interferences in the project area, including street intersections. Typical work method accommodations shall include, but not be limited to, pier and plate, installation of filter fabric and select fill, etc. Such work shall be performed as directed by the Engineer and in accordance with contract specifications and latest edition of water mains standards and specifications.

2b.Sewer Accommodations:

When sewer construction is to be performed in this contract, Contractor shall be required, if warranted by field conditions, and at locations designated by the Resident or Borough Engineer, to change the horizontal alignment of sewer facilities (if possible) including but not limited to all additional labor, material, work method accommodations, furnishing, delivering and construction of additional manholes or modification of manholes/catch basins, extending chute connections, house connections, using alternate materials and methods, poured-in-place structures, etc., necessary in order to complete sewer installation and, avoid gas interferences in the project area, including street intersections. The term sewer facility shall include, but not be limited to, all sewer pipe and appurtenances, manholes, catch basins, catch basin chutes, etc. Such work shall be performed as directed by the Engineer and in accordance with contract specifications and latest edition of sewer standards and specifications.

3. Quantity Overruns, EP-7 Funded Bid Items:

No quantity overrun, in excess of one hundred twenty five (125) percent, shall be permitted for EP-7 funded bid items (gas) included in this contract, except when Resident Engineer determines that such overruns are caused by field modifications to planned City work, or approved construction methods, or contract scope changes. Overruns not paid by City shall be negotiated and paid to Contractor by gas facility operator who then shall be entitled to reimbursement by NYCDEP under established cost sharing procedures.

4. Changes And Extra Work:

This section is not applicable to work defined under "Emergency Reconstruction Contracts" or so-called "Where and When Contracts" since these projects, by definition, inherently encounter unanticipated gas facilities and cannot be pre-engineered. In all other cases, any contract changes proposed for City work shall also cover and include all associated changes to support and protection of gas facilities affected by such changes to City work. In all other cases where the Contractor finds that City work cannot be performed as planned and specified and/or, as approved because of a need to support, protect and/or alleviate interferences from gas facilities that were not listed and/or shown, or incorrectly shown in contract plans and specifications, he shall immediately notify the Resident Engineer and the facility operators' representative of his findings. Resident Engineer shall promptly examine such claims and determine whether or not such work is covered by contract bid items and /or specifications (contract bid items and specifications shall include city contract items as well as EP-7 items). The Resident Engineer shall also examine the claim to determine if the application of EP-7 bid item "UTL-GCS-2WS - GAS INTERFERENCES AND ACCOMMODATIONS" is appropriate to resolve the claim. If upon examination, the Engineer determines that such field conditions were unanticipated (not shown and/or listed, or incorrectly shown in contract documents) and are not covered by bid items and contract specifications, he

shall then direct the Contractor and the affected facility operator to negotiate the cost of supporting and protecting, and/or alleviating the impact on City work caused by such unanticipated gas facilities with each other with the understanding that the performance of City work shall continue during negotiations. If a cost agreement is reached, the Contractor and facility operator shall adjust such costs between themselves at no additional costs to the City contract. If the Contractor and affected facility operator do not reach an agreement concerning the price to be paid for the extra work within five (5) business days of the Engineer's directive to engage into such negotiations and, after considering: public safety and inconvenience, requirements of laws and regulations applicable to private utilities, integrity of all utility systems, including but not limited to sewer and water, gas, electric, telephone and, cable TV facilities, sound engineering practices, cost (long and short term) to all affected parties, and potential City work delays, then the Resident Engineer, depending on nature and severity of interferences with City work, shall either, direct the facility operator to relocate or replace its facilities at its own discretion and cost, reimbursable by NYCDEP under established gas cost sharing procedures or, direct the Contractor to perform the utility work on actual time, material and equipment costs basis pursuant to relevant contract requirements and amendments. Contract bid prices for any applicable items of work involved shall be applied, or converted to an allowance for time and material charges. Changes shall be for affected portions of utility work and, shall be processed with EP-7 funds.

5. Excavation:

All excavators shall notify the NYC/LI One Call Center at 1-800-272-4480 at least two (2) working days, not including the day of the call, but not more than ten (10) working days in advance of the start of any excavation work. The gas company(ies) will mark out its facilities within the project limits and provide Construction Inspector(s) during all excavation work in close proximity (within twelve (12) inches) to gas facilities. The Contractor shall exercise extreme caution when excavating in the vicinity of any gas facilities. Hand excavation shall be performed within twelve (12) inches of gas facilities. The Contractor prior to excavating underneath these facilities shall adequately support all gas facilities. Standard support details for gas facilities have been included in the specifications. Any damage to gas facilities shall be reported immediately to the gas company(ies). The Contractor shall be responsible for all cost associated with repairs made necessary by damages caused by his operations.

6. Backfilling And Street Restoration:

Backfilling operations and street restorations shall be in accordance with contract requirements.

7. Non-Responsive Bids:

Every gas (EP-7) bid item has a suggested "Not less than" value per unit indicated on contract bid sheet. Bids resulting in cost of less than suggested for EP-7 items are hereby prohibited and if submitted shall be considered NON-RESPONSIVE.

8. Minimum Clearances:

Clearance requirements for City work shall govern and supersede any clearance requirement of gas facility operator. Therefore, a minimum of twelve (12) inches clearance between private utilities and City water mains, sewers or related structures to be installed in this contract shall be maintained. When this clearance is not attainable, the Resident Engineer may allow a minimum of four (4) inches clearance. With less than twelve (12) inches clearance a neoprene/polyethylene shield (to be provided by facility operator) shall be installed as part of all work item specifications. However, if Resident Engineer determines that City work cannot be performed within allowable clearance and no reasonable City accommodation (no-cost change to City work) is possible, the City shall direct the facility operator to remove, relocate, shift, or alter their facility(ies) pursuant to the New York City Administrative Code.

9. Work By Facility Operator:

The facility operator may find it necessary to perform the following types of work during performance of City work: accommodating a contractor's request for gas facilities modifications (in order to facilitate City contractor's proposed construction method) or, remedial and emergency work on gas facilities proper with their own resources and materials if an approved method of construction for City work causes unanticipated disturbances to gas facilities or, replacing defective gas facilities when they are exposed by the Contractor and their actual conditions are observable by the facility operator. Also included in the

above category of defective gas facilities are: the presence of environmental contaminants attributable to the gas facility in or around gas facilities. If such work is deemed required by the facility operator or if facility operator is directed by the City to address such deficiencies at any time during the course of construction, the Contractor shall modify the construction schedule at no cost to the City and allow the facility operator five (5) business days to perform such work without interferences. Additional costs to the facility operator (in cases of accommodations) or, Contractor (in cases of defective gas facilities) due to such gas work, if any, shall be the responsibility of the parties involved and not of the City. Such costs shall be a matter of adjustment between the Contractor and the facility operator.

10. Materials Furnished By Facility Operator:

It shall be the Contractor's responsibility to inspect material to be installed by him immediately upon delivery and advise the facility operator through its authorized representative, of all damaged materials. The Contractor at no additional costs to the City or the facility operator shall replace any material that is damaged or lost after the Contractor's inspection.

11. Liability And Insurance:

Notwithstanding the provisions of this contract, the existing division of liabilities to third parties shall remain the same as between the City and the company. Therefore, it is specifically agreed by the City, company and Contractor (by bidding on this contract) that for the purpose of any liabilities to third parties, that the City contractor performing work directly and physically relating to gas company facilities in this project, shall be deemed an agent of the company and not an agent of the City, the New York City Municipal Water Finance Authority, or the New York City Water Board. Contractor shall include the company as an additional insured on all insurance policies maintained to comply with the City's insurance requirements.

12. Width And Depth Of Excavation:

Contractor shall not be authorized to deliberately change trench or excavation widths and/or depth specified without Engineer's approval. Enlargement of any side of excavation up to eighteen (18) inches beyond pay limits (or inside face of sheeting) requested by the Contractor for the installation of certain types of sheeting may be granted. However, such enlargements or those greater than allowable shall not be approved when, in the sole judgment of the City, field conditions allow the water mains and sewer work to be performed within the limits specified and, the sole purpose of such enlargement request is to impact adjacent utilities (public or private) whose support and protection are part of this contract. Any approval shall be given at no additional cost to the City contract, including EP-7 funding, and all costs associated with unauthorized enlargements shall be the sole responsibility of the Contractor.

13. Depth And Crossing Angles Of Gas Facilities:

Where gas facilities are shown (or specified as) crossing proposed alignment of sewers, water mains, catch basins and chute connections or any other proposed excavations at specific angles (as measured off plans or sketches or specified in contract), it shall be understood that actual field measurements may deviate (plus or minus) forty-five (45) degrees from those shown or specified. The cover, or depth from street surface to top of facilities, shall be as shown or specified in contract documents, no deviation is to be assumed. Where gas facilities are not shown on contract documents, but their support and protection are otherwise included in this contract then, all references to facilities crossing at "various angles and depth" in the gas sections shall mean that such facilities are crossing sewer, water, catch basin and, catch basin chute, and other excavations at a ninety (90) degree angle to the proposed sheeting line or side of excavation (for unsheeted trenches) with an allowable deviation of forty-five (45) degrees in any direction, except for catch basin chute excavation where the allowable deviation shall be sixty (60) degrees. Where the cover is not noted or specified, the bottom face of such facilities shall be assumed to be crossing catch basin chutes at a depth of three (3) foot eight (8) inches or less from the street surface. Paragraph No. 2 above shall apply in cases of distribution water main construction. Appropriate bid items and specifications are provided for cases where angle and depth are greater than stated above. This section also applies to work defined in "Emergency Reconstruction Contracts" or so-called "Where and When Contracts". These contracts are not pre-engineered and consequently have no drawings, sketches or determined locations and so, gas facilities encountered will be crossing existing and proposed sewer, water, catch basin/catch basin chutes and all appurtenances at various angles and depths.

14. Maintenance Of Traffic For Gas Work:

All work pertaining to gas bid items and specifications shall be performed within the contract maintenance of traffic plan as specified in the contract document. The bid price for the Maintenance and Protection of Traffic shall cover all work pertaining to gas items. The City shall make compensation for additional maintenance and protection of traffic items in connection with gas item of work only when such additional work is deemed reasonable and necessary by the Resident Engineer and is approved by him prior to its performance.

15. Relocated Gas And Temporary Systems Installation:

In cases where the Contractor is allowed to select the location for temporary construction such as, installation of dewatering headers, wells, well points, etc., he shall not disturb any gas facilities shown on sketches provided in this section. The only exception shall be, if the affected gas company agrees to such relocation and provided that the cost of such relocation is a matter of adjustment between the company and Contractor, and at no cost to the City.

16. Role Of Company Inspector:

In any case in which the City elects to perform some or all support and protection work with its own employees, personnel or contractors, the facility operator shall provide onsite inspectors to approve and certify such support and protection work (exclusive of City accommodations) performed by the City's own employees, personnel, and contractors. Facility operator's inspectors are not authorized to direct City contractor during the performance of contract work. They shall act through the City Resident Engineer and provide him/her required approvals and certifications, prior to preparing partial payments of EP-7 items, in a format and frequency to be prescribed by the appropriate City Head of Construction.

17. Coordination With Gas Company:

The Contractor shall be required to notify the gas company(ies), in writing, at least two (2) weeks prior to the start of final paving in order to allow companies to complete any unfinished gas work located within the area to be paved. Every effort shall be made to maintain gas service with minimum inconvenience to the public.

III - TECHNICAL SECTION

SECTION 6.01 - Trench Crossings; Support And Protection Of Gas Facilities And Services.

1. Description:

Under this section, the Contractor shall provide all labor, materials, equipment, and incidentals required to support and/or protect the integrity of gas mains, services and appurtenances of any sizes, configurations, and operating pressures crossing trench excavations above subgrade for planned construction of sewers and water mains facilities. A gas service shall be defined as a gas pipe of three (3) inches in diameter or less branching from the main to a customer pick up point or property valve box. A gas main may be any size pipe that is part of a distribution or transmission network other than services described above. Crossings shall be defined as gas facilities spanning the width of excavation (one side to the other side). These crossings may be at various angles and depth as shown on "Gas Cost Sharing Work Standard Sketches Nos. 1 and 1A", and as specified in "General Provisions; Gas Cost Sharing Work Paragraph No. 13" and, at the locations shown or listed in contract documents. The gas company operating in the area, (facility operator), owns these facilities. The work shall be performed in accordance with contract specifications, plans, and at the directions of the Resident Engineer in consultation with the authorized representatives of the facility operator.

2. Method Of Construction:

A. Protection: In general, the gas facilities shall be protected as required by New York State Industrial Code 753. In particular, the Contractor shall use hand excavation methods (pick and shovel or hand held power tools) directly below the pavement base to expose the gas facilities (marked out by facility operators) and to ascertain the clearances and cover of the facilities with respect to the proposed excavation. Upon exposing the affected facilities sufficiently, at the discretion of the Resident Engineer, to ascertain the foregoing, Contractor shall be permitted to proceed with a combination of hand and machine excavation, as appropriate, outside a zone of protection whose limit shall be defined as a perimeter located twelve (12) inches from the outside face of each gas facility crossings (See "Gas Cost Sharing Work Standard Sketch No. 2"). If the facilities are in direct interference with City work, meaning that "Minimum Clearances" described in "General Provisions; Gas Cost Sharing Work Paragraph No. 8" cannot be maintained, and excavation has to be temporarily or permanently abandoned then this particular location shall become a test pit and dealt with as specified in Section 6.07, and "General Provisions; Gas Cost Sharing Work Paragraphs Nos. 2 and 8".

B. Support: Gas mains or services crossing excavations equal or less than four (4) feet wide are generally self supporting, unless field conditions as determined by the Resident Engineer require otherwise. The support requirements for gas mains and services crossing excavations greater than four (4) feet wide shall be as shown on the attached "Gas Cost Sharing Work Standard Sketch No. 1" and Contractor shall use sheeting methods that permit the maintenance of gas facilities in their existing locations and configurations. Alternate methods equivalent to those shown on the sketch or accommodations by the facility operator proposed by the Contractor in order to facilitate the execution of the specified work shall be allowable, provided that prior approval is obtained by the Contractor from the Engineer and the facility operator. The support and protection of gas facilities crossings shown on plans, drawings, listings or otherwise identified in this contract shall not be circumvented with the issuance of so called "order outs".

3. Method Of Measurement:

The Contractor shall be paid for supporting and/or protecting gas facilities crossing trench excavations under the appropriate bid items covered by this section. The Contractor shall be directly responsible to the facility operator for the total cost of using any alternate method requiring the use of resources owned by the facility operator. Regardless of the method used, the City shall pay the bid price for the appropriate support and/or protect item of work. The average rate charged by the facility operator for alternate support and protection work such as, disconnecting and reconnecting gas services is listed in attached "Schedule GCS-A".

4. Payment Restrictions:

This item shall not be paid for: gas services crossing unsheeted water main trench excavation; abandoned gas main/services identified by facility operator; gas mains/services crossing trench excavations for fire hydrant branch connections pipes, catch basins and/or chutes (sewer drain pipe), house sewer and/or water services; gas facilities encroaching any face of excavation for sewer and/or water construction, all of which are covered under other contract sections. Also this item shall not be paid for new gas mains and services crossing water trenches when trenching for such new facilities has been performed by the Contractor in common with trench excavation for City work (overlapping trench limits). The cost of supporting and protecting such gas facilities crossings shall be deemed included in the cost of trench excavation for the new gas facilities. This payment restriction shall apply even if such common trench gas excavation is not part of the contract. The prices bid for items covered by this section represent full compensation to Contractor to completely perform the work described. No other bid items shall be combined with these items in order to pay for gas main and/or services crossing excavations specified herein.

5. Method Of Payment:

Each (Ea.) gas facility crossing trench excavation as described in these specifications shall be counted for payment.

6. Price To Cover:

The cost of timber/steel supports installed for gas facilities shall be included in the bid price. The bid price for each crossing shall also cover all additional supervision, labor, material (except those provided by the facility operator), equipment and insurance necessary to completely maintain the gas facilities without disruption of service to the customers and in accordance with contract plans, specifications and facility operator standards. The price shall also include: changes of method of operations; sheeting modifications where necessary to accommodate the gas facilities crossings; installation and removal of water pipe under gas facilities (so called "snaking"); extra care during excavation (including hand excavation under existing single and multiple gas facilities); extra backfilling and compaction around, over and under gas facilities; installation and removal of sheeting around gas facilities; associated maintenance and protection of traffic; barricades; and traffic plates that may be required to temporarily close and/or complete the work.

SECTION 6.02 - Extra Excavation For The Installation Of Catch Basin Sewer Drain Pipes With Gas Interferences.

1. Description:

Under this item, the Contractor shall provide all labor, materials, equipment, insurance, and incidentals for the extra excavation associated with the installation of catch basin sewer drain pipes (chute) under gas facilities of various sizes crossing the trench excavation at various angles and depth at the locations shown in the contract documents and also, for the support and protection of these facilities during associated excavation and backfill operations. The gas company operating in the area, (facility operator), owns these facilities.

2. Method Of Measurement:

The bid price shall be per location (Each) where extra excavation is required when catch basin sewer drain pipes are installed at an upstream invert depth lower than four (4) feet (up to a maximum of six (6) feet) from the proposed pavement grade because the bottom faces of interfering gas mains and appurtenances are located at a depth greater than three (3) foot eight (8) inches from proposed pavement surface (See "Gas Cost Sharing Work Standard Sketch No. 4").

3. Method Of Construction:

Incremental cost responsibility for chute excavation is determined by the first private facility encountered starting from catch basin structure proper and that prevents the installation of the chute connection at an upstream cover less than or equal to three (3) feet or any other minimum cover required to avoid City facilities (e.g. water, sewer, etc.) as directed by the Resident Engineer.

4. Payment Restrictions:

This item shall not apply and related bid item shall not be paid in cases where:

A. Upstream invert chute is more than six (6) feet deep because of gas facilities.

B. Chute cannot be installed above existing gas facilities because of interferences with other private facilities that are not otherwise covered under this contract, regardless of upstream invert depth.

The above cases shall be at no cost to the City, but shall be a matter of adjustment between the Contractor and the facility operator(s).

5. Price To Cover:

The bid price shall cover the additional cost of all additional supervision, labor, materials, equipment and insurance, to complete the installation of catch basins and associated sewer connections in accordance with the contract plans and specifications. The price shall include: excavation by hand around and under single and multiple gas facilities; locating, supporting and protecting gas facilities; backfilling and all other items necessary to perform all work incidental thereto including: installation and removal of drain pipe under gas facilities ("snaking"); widening of trenches to facilitate the above work; subsequent additional backfill and pavement restoration; modifying precast catch basin window to accommodate connection; changing sheeting method and configuration to accommodate gas facility crossings; maintenance and protection of traffic; barricades; and installation of traffic plates that may be required to temporarily close and/or complete the work. The price shall not include removal of ledge rock and/or excavation of boulders in open cut.

SECTION 6.02.1 - Extra Excavation For The Installation Of Catch Basin Sewer Drain Pipes With Upstream Inverts Greater Than Six (6) Feet.

1. Description:

Under this item, the Contractor shall provide all labor, materials, equipment, insurance and incidentals for the extra excavation of catch basin chutes where the upstream invert is greater than six (6) feet under gas facilities of various sizes crossing the trench excavation at various angles and depth at the locations shown in the contract documents or as determined by field conditions and also, for the support and protection of these facilities during the associated excavation, sheeting and backfilling operations.

2. Method Of Measurement:

The bid price shall be per location (Each) where extra excavation and sheeting is required when the catch basin chute installed at an upstream invert depth lower than six (6) feet from the proposed pavement grade because the bottom faces of the interfering gas mains and appurtenances are located at a greater depth than three foot eight inches from the proposed pavement surface only.

3. Method Of Construction:

Incremental cost responsibility for chute excavation is determined by the first private facility encountered during such excavation when initiated from catch basin structure and that prevents the installation of the chute at an upstream cover less than or equal to three (3) feet or any other cover required to avoid City facilities as directed by the Resident Engineer.

4. Payment Restriction:

This item shall not apply and related bid item shall not be paid in cases where:

Upstream invert chute is less than or equal to six (6) feet deep because of gas facilities. Section 6.02 shall be paid.

5. Price To Cover:

The bid price shall cover the additional cost of all supervision, labor, materials, equipment and insurance to complete the installation of catch basin and associated sewer connections in accordance with the contract plans and specifications. The price shall include: excavation by hand around and under single and multiple gas facilities; locating, supporting and protecting gas facilities incidental thereto; widening of trenches to facilitate the above work; subsequent additional backfilling and pavement restoration; modifying pre-cast basin window to accommodate connection; the installation of catch basin with deeper sumps as specified; additional sheeting and changes in sheeting method and configuration to accommodate gas facility crossings; maintenance and protection of traffic; barricades; and installation of traffic plates that may be required to Temporarily close and/or complete the work.

SECTION 6.03 - Removal Of Abandoned Gas Facilities. All Sizes.

1. Description:

Under this section the Contractor shall provide all labor, materials, equipment, insurance and, incidentals required for the removal of abandoned gas mains, services, or appurtenances thereof, located within the street shown on the contract plans, owned by gas company operating in the project area (facility operator), used or to be used for or in connection with or to facilitate the conveying, transportation, distribution or furnishing of gas (natural or manufactured or mixture of both) for light, heat, or power, but does not include property used solely for or in connection with business of selling, distributing or furnishing of gas in enclosed containers. Such removal shall include only abandoned gas facilities that interfere with (i.e. cause additional work) City work.

2. Determination Of Operating Status Of Gas Facilities:

The Contractor shall notify facility operator, as required by New York State Industrial Code 753. Gas facilities shall not be removed without the approval of the facility operator whose authorized representative shall certify in writing (specific facility or area wide facilities certification) and in a timely manner acceptable to the Resident Engineer that abandoned facilities are free of combustible gas and any other environmental contaminants prior to removal. The Resident Engineer shall rely on facility operator's certification. The facility operator may request the excavation of test pits (See Section 6.07) for this determination ahead of City work and, Contractor shall provide safe access, facilitate and permit facility operator to enter test pit excavations for the purpose of testing gas facilities to be removed by the Contractor. However, facility operator may prefer to make this test during performance of City work, in order to issue the above certification. This shall be permitted provided that it is agreed that additional costs, if any resulting from this choice shall be a matter of adjustment between the Contractor and facility operator only, and at no cost to the City.

3. Restrictions:

The facility operator shall be solely responsible for its contaminated gas facilities, surrounding contaminated soil and their disposal and abatement procedures, unless contract bid items are applicable and provided for such work. In such cases, the quantity removed shall be charged to EP-7 bid item "UTL-GCS-2WS - GAS INTERFERENCES AND ACCOMMODATIONS" at the City bid prices.

4. Method Of Measurement:

Abandoned gas pipeline removal shall be measured for payment per linear foot of pipe and appurtenances removed.

5. Price To Cover:

The price shall cover all additional cost of supervision, labor, materials, equipment, and insurance necessary to complete this work in accordance with the contract plans and specifications, including excavation by hand around and under other City and facility operator owned properties and, where necessary, support and protection of such properties. The price shall also cover breaking, cutting, and/or burning of abandoned gas pipes and their disposal from the site; sealing open ends remaining in the excavation with concrete or caps (caps to be provided by the facility operator) and backfilling of the area where the pipeline has been removed with clean backfill. The price shall also include any required dump charges. This item does not include any type of extra excavation, backfilling, compaction, pavement removal and restoration associated with abandoned gas facilities removal, all of which are covered under Section 6.06.

SECTION 6.03.1 - Removal Of Abandoned Gas Facilities With Possible Coal Tar Wrap. All Sizes. (For National Grid Work Only)

1. Description:

Under this section the Contractor shall provide all labor, materials, equipment, insurance and, incidentals required for the removal of abandoned gas mains, services or appurtenances thereof, located within the

street shown on the contract plans, owned by the gas company operating in the project area (facility operator), used or to be used for or in connection with or to facilitate the conveying, transportation, distribution or furnishing of gas (natural or manufactured or mixture of both) for light, heat, or power, but does not include property used solely for or in connection with business of selling, distributing or furnishing of gas in enclosed containers. Such removal shall include only abandoned gas facilities that interfere with (i.e. cause additional work) City work. These gas facilities may be coated with Coal Tar Wrap and so, may require special handling and disposal methods as specified in National Grid Standard Operating Procedure 12-2, Coal Tar Wrap Handling and 12NYCRR56.

2. Determination Of Operating Status Of Gas Facilities:

The Contractor shall notify facility operator, as required by New York State Industrial Code 753. Gas facilities shall not be removed without the approval of the facility operator whose authorized representative shall certify in writing (specific facility or area wide facilities certification) and in a timely manner acceptable to the Resident Engineer that abandoned facilities are free of combustible gas and any other environmental contaminants prior to removal. The Resident Engineer shall rely on the facility operator's certification. The facility operator may request the excavation of test pits (See Section 6.07) for this determination ahead of City work and, the Contractor shall provide safe access, facilitate and permit facility operator to enter test pit excavations for the purpose of testing gas facilities to be removed by the Contractor. However, the facility operator may prefer to make this test during performance of City work, in order to issue the above certification. This shall be permitted provided that it is agreed that additional costs, if any, resulting from this choice shall be a matter of adjustment between the Contractor and the facility operator only, and at no cost to the City contract. Should such investigation result in the determination that the abandoned gas facilities do not contain Coal Tar Wrap then the removal of said facilities shall be covered under separate item (See Section 6.03).

3. Requirements:

The City Contractor shall excavate abandoned gas facility sufficiently, either in its entirety, or at locations determined by Contractor to allow the removal of Coal Tar Wrap (if present on the abandoned gas facility) and to facilitate the safe extraction of manageable lengths of abandoned pipe without damage to adjacent facilities, utilities or City structures either parallel to or crossing above or below abandoned gas facility. The Contractor is to allow access to the designated cutting points within the Contractor's trench by authorized National Grid personnel who will remove the Coal Tar Wrap as per National Grid procedures. This work by National Grid personnel shall be performed in a timely fashion and shall not unduly impede the Contractor's progress and/or productivity. Upon completion of the coating removal, the Contractor shall be allowed to cut, burn or grind the gas facility and remove the section of abandoned pipe. The Contractor at a site designated by the Contractor shall stockpile the removed pipe. The facility operator will be responsible to provide trucking and disposal services with its own personnel and shall remove the stockpiled pipes during off hours or during such time as agreed to by the Contractor. Since the pipe removed will remain the property of the facility operator and is to be disposed of by the facility operator, the facility operator shall be responsible for any required notifications, filings, dump charges and incidentals associated with the disposal of abandoned gas facilities found to contain Coal Tar Wrap.

4. Method Of Measurement:

Abandoned gas pipeline removal shall be measured for payment per linear foot of pipe and appurtenances removed.

5. Price To Cover:

The price shall cover all additional cost of supervision, labor, materials, equipment and insurance necessary to complete this work in accordance with the contract plans and specifications, including excavation by hand around and under other City and facility operator owned properties and, where necessary, the support and protection of such properties. The cost shall also include hand excavation in the area(s) of proposed abandoned pipe cut(s), cutting and/or burning of abandoned gas pipes and stockpile of removed sections of abandoned pipe and associated maintenance and protection of traffic, blocking and temporary fencing if required. The unit price shall also cover sealing open ends remaining in the excavation with concrete or end caps (end caps to be provided by the facility operator) and backfilling of the area where the abandoned pipeline has been removed with clean backfill material. This

item does not include any type of extra excavation, backfilling, compaction, pavement removal and/or restoration (temporary and permanent) associated with abandoned pipe removal ("lost trench"), all of which are covered under separate Section 6.06. The price shall also include allowance for any loss of productivity by the Contractor due to required facility operator work to remove pipe coating and prepare pipe for cutting as well as any change in Contractor's excavation method, additional trucking and/or stockpiling costs.

SECTION 6.03.1a - Removal Of Abandoned Gas Facilities With Possible Coal Tar Wrap. All Sizes. (For Con Edison Work Only)

1. Description:

Under this section the Contractor shall provide all labor, material, equipment, insurance and, incidentals required to prepare abandoned gas mains, services and appurtenances thereof located within the street shown on contract plans, owned by the gas company operating in the project area (facility operator), for removal due to interference with proposed City work. These abandoned gas facilities were, at one time, used for or in connection with or to facilitate the conveying, transportation, distribution or furnishing of gas (natural, manufactured or a combination of both) for light, heat, or power, but does not include property used solely for or in connection with business of selling, distribution or furnishing of gas in enclosed containers. Such preparation for removal shall include only abandoned gas facilities that interfere with (i.e. cause additional work) City work. These gas facilities may be coated with Coal Tar Wrap which may contain asbestos or PCB's and so, may require special handling and disposal methods as specified in Con Edison - ASBESTOS MANAGEMENT MANUAL, CHAPTER 6 - ASBESTOS WORK PROCEDURES, SECTION 06.04 - COAL TAR WRAP REMOVAL. For under 25' (feet) in length and an approved NYC-DEP variance for over 25' (feet).

2. Determination Of Operating Status Of Gas Facilities:

The Contractor shall notify facility operator, as required by New York State Industrial Code 753. Gas Facilities shall not be removed without the approval of the facility operator whose authorized representative shall certify in writing (specific facility or area wide facilities certification) and in a timely manner acceptable to the Resident Engineer that abandoned facilities are free of combustible gas and any other environmental contaminants prior to removal. The Resident Engineer shall rely on the facility operator's certification. The facility operator may request the excavation of test pits (See Section 6.07) for this determination ahead of City work and Contractor shall provide safe access, facilitate and permit facility operator to enter test pit excavations for the purpose of testing gas facilities. However, the facility operator may prefer to make this test during performance of City work in order to issue the above certification. This shall be permitted provided that it is agreed that additional costs, if any, resulting from this choice shall be a matter of adjustment between the Contractor and the facility operator only, and at no cost the City contract. Should such investigation result in the determination that the abandoned gas facilities do not contain Coal Tar Warp then the removal of said facilities shall be covered under separate item (See Section 6.03).

3. Requirements:

The Contractor shall excavate abandoned gas facility sufficiently, either in it's entirety, of at locations determined by Contractor to allow the removal of Coal Tar Wrap (if present on the abandoned gas facility) and to facilitate the safe extraction of manageable lengths of abandoned pipe without damage to adjacent facilities, utilities or city structures either parallel to or crossing above or below abandoned gas facility. The Contractor is to allow access to the designated cutting points within the Contractors trench by authorized Con Edison personnel who will remove the Coal Tar Wrap as per Con Edison and/or NYC-DEP approved procedures. This access shall conform to all applicable codes, rules & regulations. This work by Con Edison personnel shall be performed in a timely fashion and shall not unduly impede the Contractors progress and/or productivity. Upon completion of the coating removal, the Contractor shall be allowed to cut, burn or grind the gas facility and remove the section of abandoned pipe. Contractor shall designate a specific site to stockpile those removed pipes. The facility operator will be responsible to provide trucking and disposal services with its own personnel and shall remove the stockpiled pipes

during off hours or during such time as agreed to by the Contractor. Since the pipe removed will remain the property of the facility operator and is to be disposed of by the facility operator, the facility operator shall be responsible for any required notifications, filings, dump charges and incidentals associated with the disposal of abandoned gas facilities found to contain Coal Tar Wrap.

4. Method Of Measurement:

Abandoned gas facility removal shall be measured for payment per linear foot of pipe and appurtenances removed.

5. Price To Cover:

The price shall cover all additional cost of supervision, labor, materials, equipment and insurance necessary to complete this work in accordance with the plans and specifications, including, but not limited to, excavation by hand around and under other City and facility operator owned properties and, where necessary, the support and protection of such properties. The coast shall also include hand excavation in the area(s) of proposed abandoned pipe cut(s), cutting and/or burning of abandoned gas pipes and stockpile of removed sections of abandoned pipe and associated maintenance of traffic, blocking and temporary fencing if required. The unit price shall also cover sealing open ends remaining in the excavation with concrete or end caps (end caps to be supplied by facility operator) and backfilling of the area where the abandoned pipeline has been removed with clean backfill material. This item does not include any type of extra excavation, backfilling, compaction, pavement removal and/or restoration (temporary and permanent) associated with abandoned pipe removal ("lost trench"), all of which are covered under separate Section 6.06. The price shall also include allowance for any loss of productivity by the Contractor due to required facility operator work to remove pipe coating and prepare pipe for cutting as well as any change in Contractor excavation method, additional trucking and/or stockpiling costs.

SECTION 6.04 - Adjust Hardware To Grade Using Spacer Rings/Adaptors. (Street Repaving.)

1. Description:

Under this section, the Contractor shall provide all labor, supervision, materials, equipment, insurance and incidentals required to adjust to final grade gas street surface hardware located within the contract area boundaries shown on the plans. The gas company operating in the area, (facility operator), owns these facilities. The work shall be performed in accordance with the contract plans, specifications and at the directions of the Resident Engineer in concurrence with authorized representative of the facility operator.

2. Materials:

The facility operator shall furnish and deliver all prefabricated hardware parts required. These include adaptors for the grade adjustment proper and new street hardware if existing ones are found to be defective, all in accordance with the facility operator standards and City rules and regulations. The Contractor shall notify the facility operator of the installation schedule at least three (3) business days before materials are required on the site. Should the facility operator fail to deliver the necessary material according to any schedule mutually agreed upon by the Contractor and facility operator, the City shall not be responsible for any delays attributable thereto, nor for the failure of delivery of such materials. On project where material storage is not permitted on site, the facility operator shall deliver the required material to the Contractor's yard and it shall be the Contractor's responsibility to transport the material to the work site when needed for installation. It shall also be the Contractor's responsibility to inspect the materials to be installed by him immediately upon delivery and advise the facility operator through its authorized representative, of all damaged materials. The Contractor at no additional expense to the City or the facility operator shall replace any material that is damaged or lost after the Contractor's inspection.

3. Method Of Measurement:

The Contractor shall be paid for each six (6) inch round box and/or nine (9) inch square box adjusted to grade regardless of adjustment height requirements.

4. Price To Cover:

The unit price bid for this item shall include all additional labor, supervision, insurance, equipment and, material (except those to be provided by the facility operator), required to adjust each box to grade as required in the contract plans and specifications. The bid price shall also include the removal of existing frames and covers from existing facilities to be salvaged and returned to the facility operator and, all material transportation from the Contractor's material storage yard to the work site. In addition the bid price shall include "chipping" around existing box using appropriate means and methods where grinding is required.

SECTION 6.05 - Adjust Hardware To Grade By Resetting. (Road Reconstruction.)

1. Description:

Under this item, the Contractor shall provide all labor, supervision, materials, equipment, insurance and incidentals required to adjust to the proposed grade gas street surface hardware located within the contract area boundaries shown on the plans. The gas company operating in the area, (facility operator), owns these facilities. The work shall consist of either building up or lowering or resetting the casting by removing the existing frame and cover building up or decreasing the existing installation, replacing the frame and/or cover if damaged or worn out, as determined by the Resident Engineer, with a new frame and/or cover furnished by the owner, and setting the frame and cover to new elevation. The work shall be performed in accordance with the contract plans, specifications and at the directions of the Resident Engineer.

2. Materials:

The facility operator shall furnish and deliver all new hardware parts required. The Contractor shall furnish materials such as mortar, bricks and concrete in compliance with contract requirements. At locations where high-early strength concrete is required under this contract to be placed adjacent to gas facilities, then the requirement for concrete shall be high-early strength complying with the current New York State Department of Transportation, Standard Specifications for Class F concrete. Existing castings may be replaced as required and deemed necessary by the Engineer and by City rules and regulations. The Contractor shall install the new castings of various sizes furnished by the facility operator. The Contractor shall notify the facility operator of the installation schedule at least three (3) business days before materials are required on the site and, shall provide off-loading services to the facility operator. Should the facility operator fail to deliver the necessary material according to any schedule mutually agreed upon by the Contractor and facility operator, the City shall not be responsible for any delays attributable thereto, nor for the failure of delivery of such materials. Such delays shall be a matter of adjustment between the Contractor and the facility operator. On project where material storage is not permitted on site, the facility operator shall deliver the required material to the Contractor's yard and it shall be the Contractor's responsibility to transport the material to the work site when needed for installation. It shall also be the Contractor's responsibility to inspect the materials to be installed by him, immediately upon delivery and advise the facility operator through its authorized representative, of all damaged materials. The Contractor at no additional expense to the City or the facility operator shall replace any material that is damaged or lost after the Contractor's inspection.

3. Methods Of Construction:

The Contractor shall remove and reinstall existing castings or install new castings to the proposed grade. Setting and resetting the castings shall be done with mortar and brick according to the standards of the facility operator. Work shall be performed in a workmanlike manner. Castings that are deemed unacceptable for resetting shall remain the property of the facility operator and he shall be responsible for their removal and proper disposal from site. No traffic shall be allowed on adjusted street hardware until permitted by the Engineer.

4. Method Of Measurement:

The Contractor shall be paid for each gas hardware adjusted to grade regardless of size or adjustment height requirements (up or down).

5. Price To Cover:

The unit price bid for this item shall include all additional labor, supervision, insurance, equipment and, material (except those to be provided by the facility operator), required to adjust each gas hardware to grade as required in the contract plans and specifications. The bid price shall also include the removal of existing frames and covers from existing facilities; building up the existing installations with bricks and mortar, or lowering the existing installation by removing bricks and mortar; replacing damaged frames and/or covers with new frames and/or covers furnished by the facility operator; setting the frames and covers to the new elevations; protect existing installations; repair minor structural damages to existing installations prior to resetting frames; unloading of furnished castings at the Contractor's yard and transporting castings from the Contractor's yard to the job site as required; completing the work in accordance with the contract plans, specifications and, at the directions of the Engineer. In addition the bid price shall include "chipping" around existing gas facilities using appropriate means and methods where grinding is required.

SECTION 6.06 - Special Care Excavation And Backfilling.

1. Description:

Under this section, the Contractor shall provide all labor, materials, equipment, insurance and incidentals required to support and protect the integrity of live gas facilities including mains, services, related structures and appurtenances during excavations. The gas company operating in the area, (facility operator), owns these facilities. The work shall be performed in accordance with the contract plans, specifications and at the directions of the Resident Engineer in consultation with authorized representatives of the facility operator.

2. Applicability Of Section:

This section shall apply to live gas facilities of various sizes located within two (2) feet of any face of unsheeted excavation, (unsheeted excavation refers to any excavation performed for city work and includes excavations performed that are to be subsequently sheeted using approved methods) and paralleling or, encroaching any face of excavation. Also, for crossings greater than forty-five (45) degrees and/or located at a cover depth greater than five (5) feet from existing street surface. Parallel facilities are not exposed at any time during excavation (See "Gas Cost Sharing Work Standard Sketch No. 5"). Encroaching facilities are partially exposed inside the limit of excavation (See "Gas Cost Sharing Work Standard Sketch No. 5"). This section shall also apply to gas facilities crossing catch basins excavation, and catch basins sewer connections (chutes) trench excavation only when extra depth (covered in other section), is not required for chutes installations because of such utilities interferences (See "Gas Cost Sharing Work Standard Sketch No. 3"). This section shall also apply to gas services (if shown or otherwise listed in contract documents) crossing unsheeted excavations for water mains, gas facilities crossing fire hydrant branch connections, house sewer and/or water service connections excavations. This section shall also apply for so called "loss trench", as described further, and for additional excavation (pavement and/or soil), backfilling, compaction, roadway base and pavement restoration due to abandoned gas facilities, only if removed by Contractor. If operating status of gas facilities cannot be determined prior to excavation then such facilities shall be considered live and this section shall fully apply. The excavation around fully exposed live gas facilities along and within limits of excavation (not crossings) shall be covered by this section also (not shown on "Gas Cost Sharing Work Standard Sketch No. 5"), however the support requirement, if any is required, of such facilities is beyond the scope of these specifications and therefore shall be the responsibility of facility operator to determine and prescribe, at no cost to the City contract, but shall be a matter of adjustment between the Contractor and facility operator.

3. Payment Restriction:

No special care excavation shall be paid for abandoned gas facilities paralleling and/or encroaching excavation and therefore are not in direct interference with City work. Except as allowed in this section, the bid item specified under this section shall not be used in combination with items covered under other

sections for work done due to a particular gas facility. This item shall not be paid for new gas facilities when trenching for such new facilities has been performed by the Contractor of record in common with trench excavation for City Work (overlapping trench limits). The cost of excavating with care as defined in this section shall be deemed included in the cost of trench excavation for the new gas facilities. This restriction shall apply even if such gas common trench excavation is not part of the contract. If facilities are in direct interference with City work, meaning that "Minimum Clearances" described in "General Provisions; Gas Cost Sharing Work Paragraph No. 8" cannot be maintained and excavation has to be temporarily or permanently abandoned then this particular location shall become a test pit and dealt with as specified in Section 6.07 and "General Provisions; Gas Cost Sharing Work Paragraphs Nos. 2 and 8".

4. Method Of Construction:

All excavation in the vicinity of gas facilities shall be as required by NYS Industrial Code 753. Where these facilities are paralleling and located two (2) feet or less from the limits of the proposed excavation, the Contractor shall use hand excavation methods (pick and shovel or hand held power tools) to ascertain the clearances of these facilities with respect to the proposed excavation. Once the location of these facilities with respect to the proposed excavation is verified to the satisfaction of the Resident Engineer, the Contractor shall then proceed with a combination of hand and machine excavation as required preserving the integrity of the facilities. The installation of timber supports or underpinning, when soil foundation cannot fully support partially exposed pipes, may be required to prevent pipe movement as directed by the Resident Engineer.

5. Method Of Payment:

The unit price for this work item shall be based on cubic yard (CY) of average excavation with care and, is to be considered as an incremental cost for performing City work with gas facilities interferences.

6. Method Of Measurement:

A. For Paralleling Facilities: Volume calculated as: Depth as measured from existing street surface to the bottom of unsheeted trench excavation allowable by OSHA regulations, multiplied by, the width measured as one (1) foot from the face of excavation toward the center of excavation, multiplied by the length of parallel facility, divided by twenty-seven (27) cubic feet per cubic yard (See "Gas Cost Sharing Work Standard Sketch No. 5"). The gas facility is no longer considered to be in interference once sheeting has been installed, therefore no further compensation for paralleling facilities as described above will be made.

B. For Encroaching Facilities: Volume calculated as: Depth of trench excavation multiplied by, the width of partially exposed pipe plus one (1) foot, multiplied by the length of facility encroachment, divided by twenty-seven (27) cubic feet per cubic yard (See "Gas Cost Sharing Work Standard Sketch No. 5").

C. Fully Exposed Gas Facilities: (Not shown on "Gas Cost Sharing Work Standard Sketch No. 5") along and inside trench and/or crossing trench at an angle greater than forty-five (45) degrees and/or a cover depth greater than five (5) feet from the existing street surface. The volume shall be measured as the depth of trench excavation multiplied by the distance measured along the sheeting line between two (2) points of intersections of the gas facilities and the sides of trench excavation, multiplied by the width of trench excavation.

D. For Additional Excavation And Restoration Due To So Called "Loss Trench", When The Integrity Of Pavement And Soil Above And Around Existing Live Gas Facilities Cannot Be Maintained Due To Its Lack Of Cohesiveness: Volume shall be calculated as: Depth of unsheeted trench excavation multiplied by width measured as distance of facility from closest edge of unsheeted excavation plus, width of facility proper plus, one (1) foot or a maximum width of three (3) feet multiplied by length of facility fully exposed divided by, twenty-seven (27) cubic feet per cubic yard (not shown on "Gas Cost Sharing Work Standard Sketch No. 5").

E. For Facilities Crossing Excavation For Catch Basins, Or Chutes Installations (When NYCDEP Funded) Or Fire Hydrant Branch Connections, Or Unsheeted Water Main Trench, Or House Sewer And/Or Water Services: Volume calculated as: Depth as defined above multiplied by, the width taken as the outside diameter of pipe or the width of structure plus one (1) foot on either side (two (2)

feet), multiplied by, the length of exposed facility crossing the trench, divided by twenty-seven (27) cubic feet per cubic yard (not shown on "Gas Cost Sharing Work Standard Sketch No. 5").

Overlapping volume dimensions measured as described above may occur when multiple facilities are paralleling excavations, encroaching excavations or crossing catch basins and catch basin chute installations. In such cases, all such facilities shall be counted as one limited by the extreme pipes, faces (See "Gas Cost Sharing Work Standard Sketch No. 2"). The volume shall then be calculated as described above.

7. Price To Cover:

The bid price shall also cover all additional supervision, labor, material, equipment and insurance necessary to excavate while protecting and maintaining (excluding supports for fully exposed live gas) gas facilities without disruption of service to the public and in accordance with contract specifications. The price shall also include, changes of sheeting method and excavation width configuration where necessary to accommodate gas facilities in their existing locations; difficulties during the installation of catch basins, chute connections, hydrant branch, and house sewer and water connections under or over gas facilities; loss of productivity due to slower rate of excavation (special care) during excavation, including the use of such methods as: hand excavation around existing single and multiple facilities, extra excavation and backfilling due to lost trench because of existing and adjacent gas facilities, compaction, removal of sheeting from the facilities, extra roadway base restoration and temporary pavement, associated maintenance and protection of traffic, barricades, and traffic plates that may be required to temporarily close and/or complete the work.

SECTION 6.07 - Test Pits For Gas Facilities.

1. Description:

Under this section, the Contractor shall furnish all labor, materials, insurance, equipment and appliances necessary to excavate, sheet and, maintain test pits at locations approved by the Resident Engineer in consultation with the facility operator. Test pits shall be dug in order to ascertain exact locations, cover and invert elevations, clearances, alignment and operating status (live or dead) of existing gas facilities. The Contractor shall inspect jointly with the Resident Engineer and facility operator, gas facilities and other structures uncovered, take all relevant measurements and elevations as directed by the Resident Engineer. Tests to determine operating status of gas facilities shall be performed by facility operator. The pits shall be covered with steel plates during daytime nonworking hours, and uncovered, as required, until the inspection work is completed. Testing of gas facilities may require a maximum of four (4) hours. Then, the pits shall be backfilled with clean fill, and resurfaced with temporary pavement. All traffic shall be maintained and all safety measures as stipulated shall be complied with.

2. Methods Of Construction:

A. Excavation: Existing pavement to be removed shall be neatly cut along lines of removal with a saw or other approved equipment which leaves a neat straight joint line along the juncture with subsequently replaced pavement. Excavation in the vicinity of utilities and other structures shall be performed using hand tools. Use of hand operated pneumatic and electric jackhammers will be permitted only for breaking pavement and removal of masonry, concrete and boulders, or as otherwise directed by the Resident Engineer. The Contractor shall properly dispose of all materials excavated from test pits away from site. Test pits shall be excavated at locations shown on the contract drawings or as directed by the Resident Engineer. Additional test pits may be required and shall be excavated where required, as ordered by the Resident Engineer. All test pits shall be excavated to a depth and size necessary to locate the existing facilities. Sheeting shall be used when depth of excavation exceeds five (5) feet. The sheeting required shall be furnished and installed in full compliance with the State of New York and Federal Safety Codes requirements and as specified in contract, whichever is more stringent. Care shall be taken that no existing gas facilities or other structures are broken or damaged. All broken or damaged facilities shall be reported immediately to facility operator who shall decide whether such facilities shall be repaired or replaced by company forces or by City contractor and in conformance with "General Provisions; Gas Cost Sharing Work Paragraph No. 9". Contractor shall excavate all material encountered, including

large masses of concrete, cemented masonry and boulders, as directed by the Resident Engineer. Any type of excavation protection used, shall satisfy the following:

(a) Industrial Code Rule 753.
(b) Prevent injury to workers and the public, and avoid damage to existing water, sewer, and gas pipes or other structures, and to pavements and their foundations, through caving or sliding of the banks of the excavation.

Should it become necessary, as determined by the Resident Engineer, to enlarge any test pit in any dimension after sheeting has been placed, the Contractor shall remove portions of the sheeting, as necessary, enlarge the test pits as directed, and replace the sheeting without additional compensation for this work other than for the additional volume of material excavated.

B. Maintenance Of Test Pits: Excavated test pits shall be maintained free of debris and kept dry by the Contractor in order to permit the inspection and measurements and to determine the locations of facilities. In order to accomplish this, Contractor shall, upon completion of excavation and placement of sheeting (if depth greater than five (5) feet), furnish and install adequate steel plates and posting over the excavated pits and shall temporarily remove all equipment debris and workers, and relocate barricades in order to open the full width of street to traffic during nonworking hours. The Contractor shall then, at no additional cost, relocate such barricades, barrels, cones and other warning devices and remove steel plates, as and when directed by the Resident Engineer to facilitate the inspection of exposed facilities. When work is being performed and the pits are not covered with steel plates, the Contractor shall provide complete and safe access to the test pits as may be required, and he shall provide construction barricades and maintain traffic at all times as shown or as directed by the Resident Engineer. Upon completion of test pit inspection by the Resident Engineer, the pit shall be backfilled by the Contractor as specified in contract, except that backfill material shall conform to contract specifications for such purpose.

C. Pavement And Sidewalk Restoration: After backfilling is completed, the Contractor shall construct a temporary pavement consisting of a minimum of four (4) inches thick asphaltic concrete mixture in roadway areas or a two (2) inches thick asphaltic concrete mixture in sidewalk areas in order to maintain existing pedestrian and vehicular traffic. This temporary pavement shall be maintained until permanent pavement and sidewalk replacement is constructed as specified in contract.

3. Measurements:

The quantity to be measured for payment shall be the number of cubic yards of material removed from within the limits of the pit dimensions as directed by the Resident Engineer. The volume occupied by existing pipes or other structures remaining within the maximum payment lines will not be deducted from the total volume measured except, where the cross sectional area of these facilities exceeds four (4) square feet. As determined by the Resident Engineer, the quantity measured for payment may be proportionate to a fair and reasonable estimate of gas responsibility in the total volume excavated.

4. Price To Cover:

The contract price bid per cubic yard for test pits shall cover all additional costs of labor, material, insurance, equipment, appliances and incidentals required to excavate test pits, including removal and disposal of excavated materials, sheeting, steel plating, backfill, compaction and temporary pavement and sidewalk restoration all in accordance with the specifications and as direction of the Resident Engineer. The price shall also include the cost of providing safe access to the excavation by facility operator for the performance of certain test to determine operating status of gas facilities prior to City work. The price shall also include support and protection of all gas facilities crossing excavation, paralleling and/or encroaching any face of excavation.

GAS COST SHARING STANDARD SPECIFICATIONS
SCHEDULE GCS-A

Average rate charged by utility companies to Disconnect and Reconnect Gas Services:

1. National Grid - $586.90 per Service/and Visit
2. Con Edison - $524.00 per Service/and Visit

IV - STANDARD SKETCHES; GAS COST SHARING WORK

Hereinafter attached are the following Standard Sketches for Gas Cost Sharing Work:

Sketch No. 1 - Support Requirements For Gas Mains And Services Crossing Excavation Greater Than 4' - 0" Wide At Any Angle

Sketch No. 1A - Support Requirements For Gas Mains Over 16" Diameter Up To And Including 48" Diameter Crossing Excavation At Any Angle

Sketch No. 2 - Typical Methods Of Measurement For Gas Crossings

Sketch No. 3 - Utility Crossings During Catch Basin Chute Connection Pipe Installation

Sketch No. 4 - Utility Crossings During Catch Basin Chute Connection Pipe Installation (Extra Depth)

Sketch No. 5 - Gas Main Encroachment On And/Or Parallel To Excavation Of Unsheeted Trench

GAS COST SHARING WORK (SKETCH NO. 1)

SUPPORT REQUIREMENTS FOR GAS MAINS AND SERVICES CROSSING EXCAVATION GREATER THAN 4'-0" WIDE AT ANY ANGLE

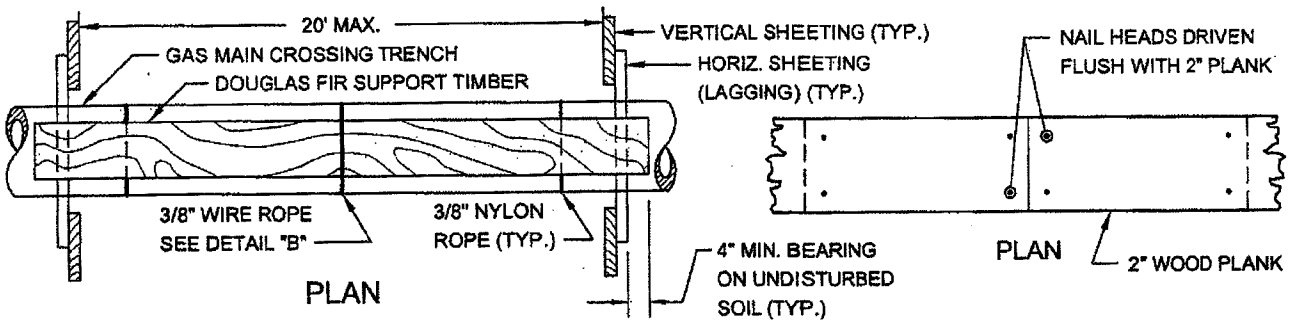

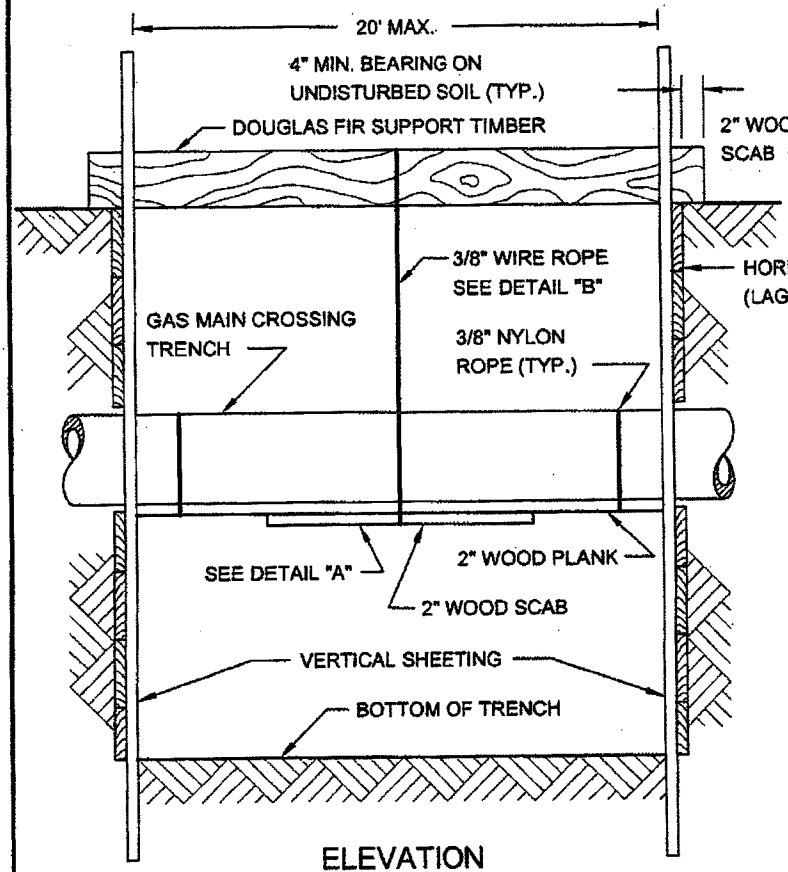

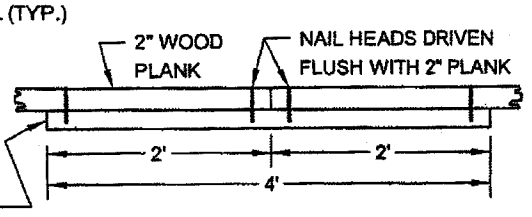

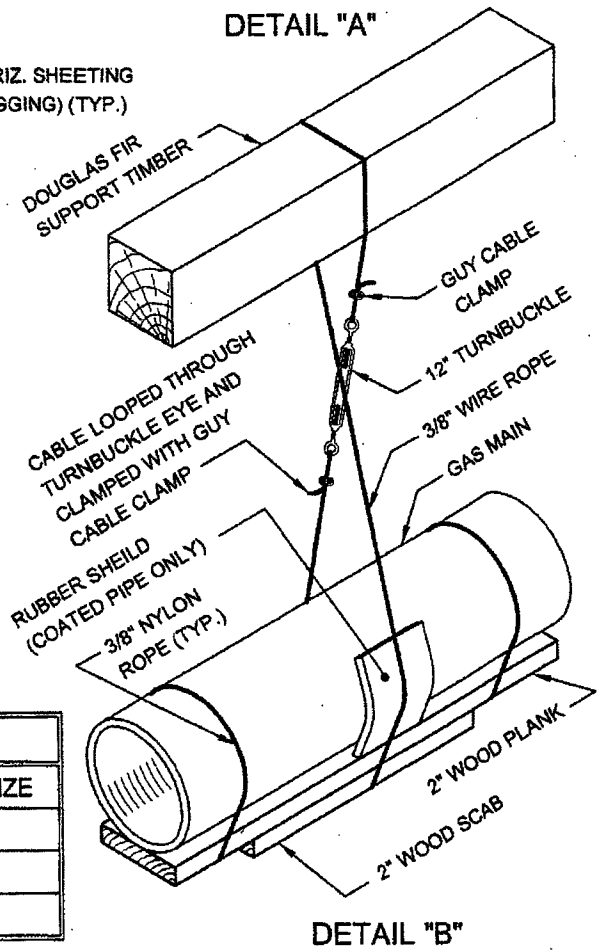

CABLE SUPPORT		TIMBER SUPPORT	
MAIN TYPE	SPACING	MAIN SIZE	TIMBER SIZE
CAST IRON	4' O.C. MAX.	UP TO 6"	6" X 6"
STEEL	10' O.C. MAX.	8" TO 10"	8" X 8"
PLASTIC	10' O.C. MAX.	12" TO 16"	10" X 10"

REVISED OCT. 2004 - L. ADRIEN
REVISED JUNE 1998 - J. WONG / W. PATALANOP. MOY

GAS COST SHARING WORK (SKETCH NO. 1A)

SUPPORT REQUIREMENTS FOR GAS MAINS OVER 16" DIAMETER UP TO AND INCLUDING 48" DIAMETER CROSSING EXCAVATION AT ANY ANGLE

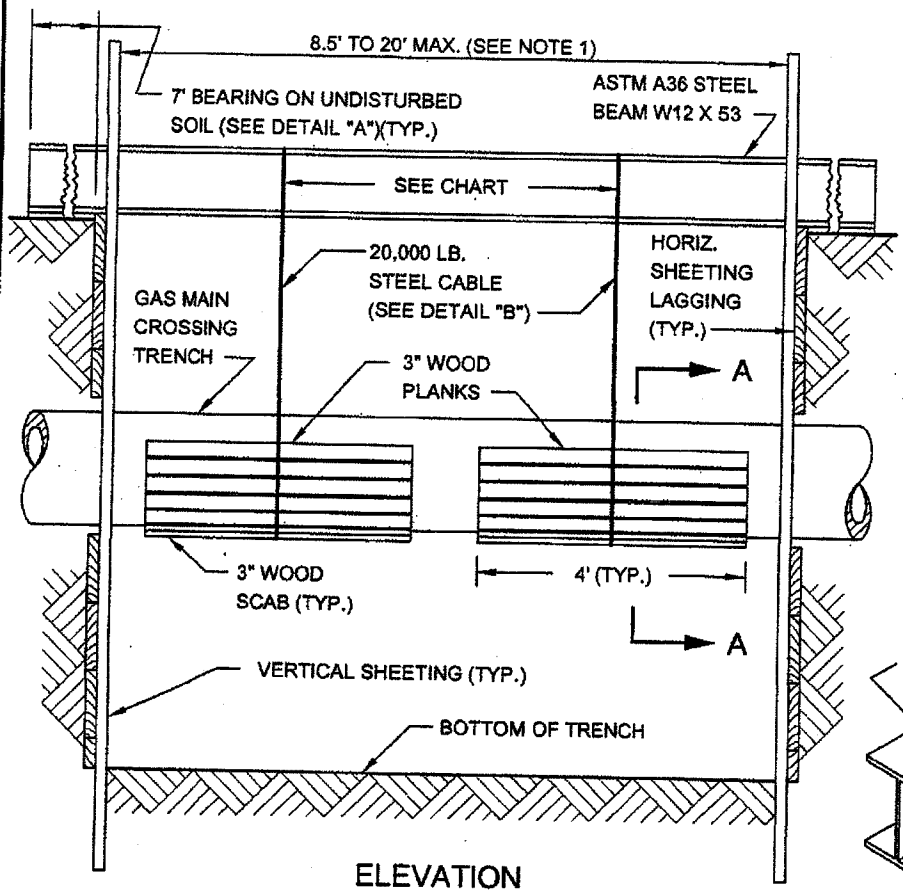

ELEVATION

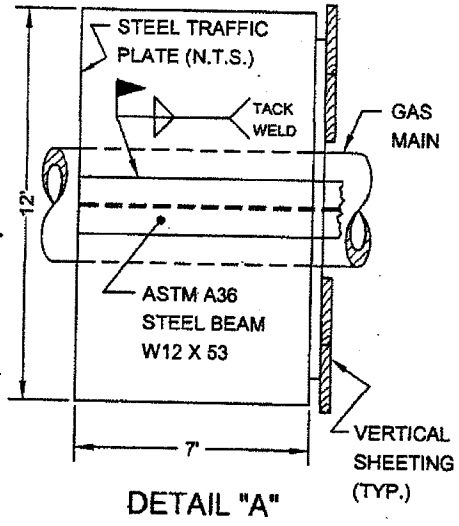

DETAIL "A"

CABLE SUPPORT	
MAIN TYPE	SPACING
CAST IRON	4' O.C. MAX.
STEEL	10' O.C. MAX.

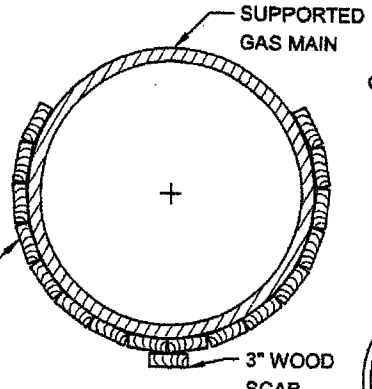

SECTION A-A

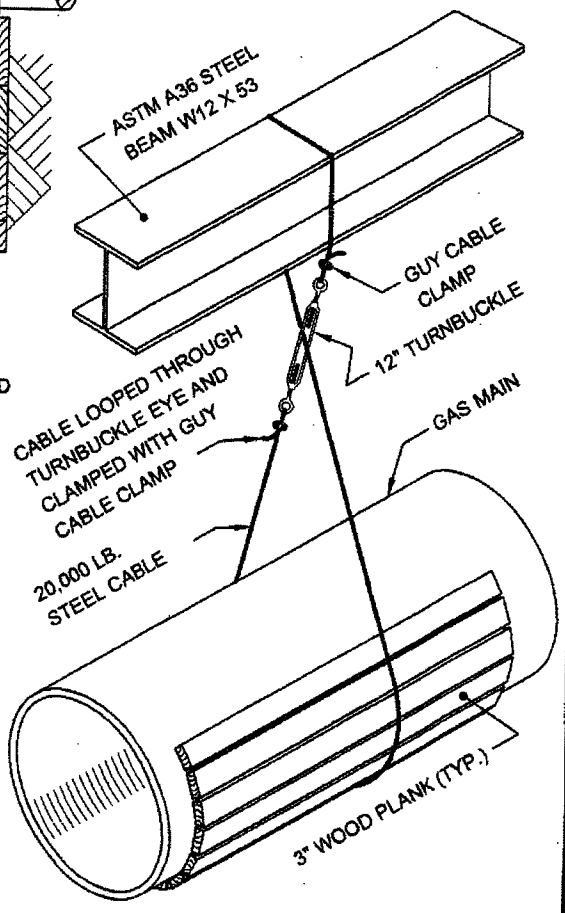

DETAIL "B"

NOTES:

(1) NO SUPPORT IS REQUIRED FOR GAS MAINS OVER 16" DIA. UP TO AND INCLUDING 48" DIA. CROSSING TRENCHES LESS THAN 8.5' WIDE.

(2) UNDERMINE A MAXIMUM OF 8.5 L.F. OF CAST IRON GAS MAIN AT A TIME.

(3) SET STEEL CABLE OVER 3" WOOD PROTECTIVE PLANKS AND PLACE AN ADDITIONAL 3" SCAB ON THE BOTTOM OF THE GAS MAIN.

(4) ADJUST STEEL CABLE UNTIL DEAD WEIGHT OF THE UNDERMINED GAS MAIN HAS BEEN TAKEN UP BY THE OVERHEAD STEEL BEAM SUPPORT.

(5) ALL SUPPORTS AND STEEL CABLES CAN BE REMOVED ONLY AFTER THE REQUIRED BACKFILL (AROUND AND BELOW GAS MAIN) HAS BEEN COMPACTED IN ACCORDANCE WITH NEW YORK CITY STANDARDS AND AT THE DIRECTIONS OF THE ENGINEER.

REVISED 2004 - I. ADRIEN
REVISED 1999 - J. WONG / W. PATALANOP, MOY

GAS COST SHARING WORK (SKETCH NO. 2)

TYPICAL METHODS OF MEASUREMENT FOR GAS CROSSINGS

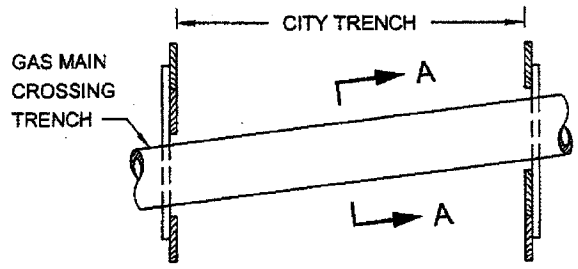

SINGLE FACILITY CROSSING

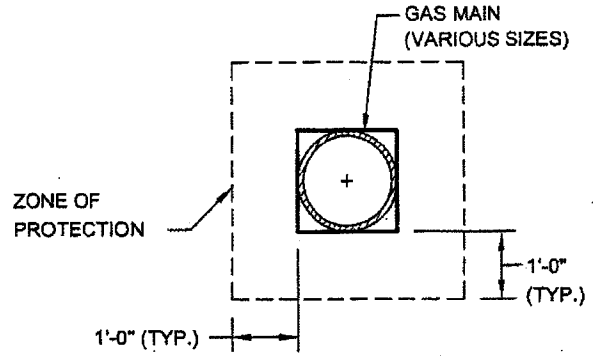

SECTION A-A

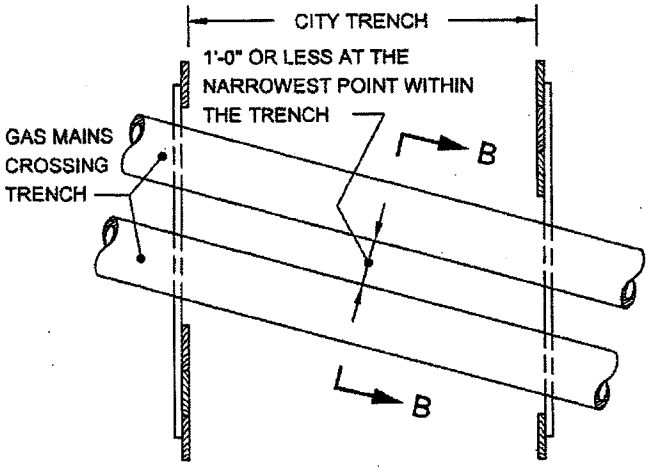

MULTIPLE FACILITIES
(GAS MAINS AT SAME ELEVATION)

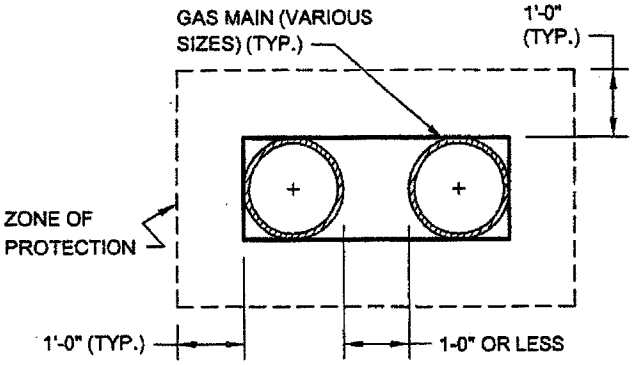

SECTION B-B

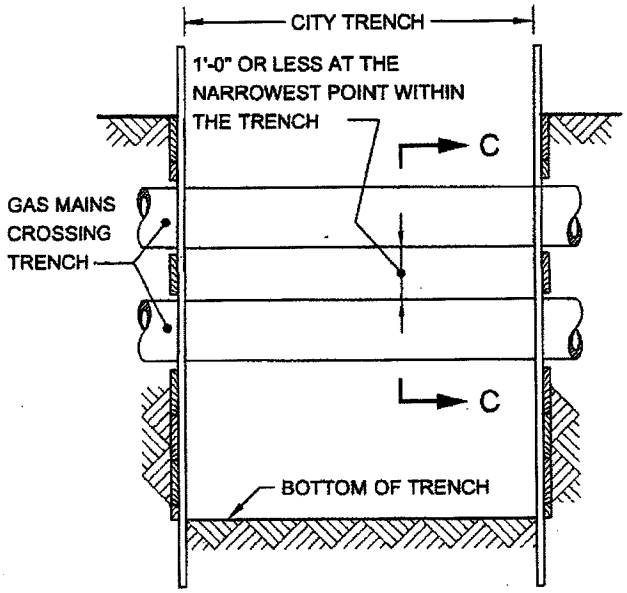

MULTIPLE FACILITIES
(ONE CROSSING AT DIFFERENT ELEVATIONS)

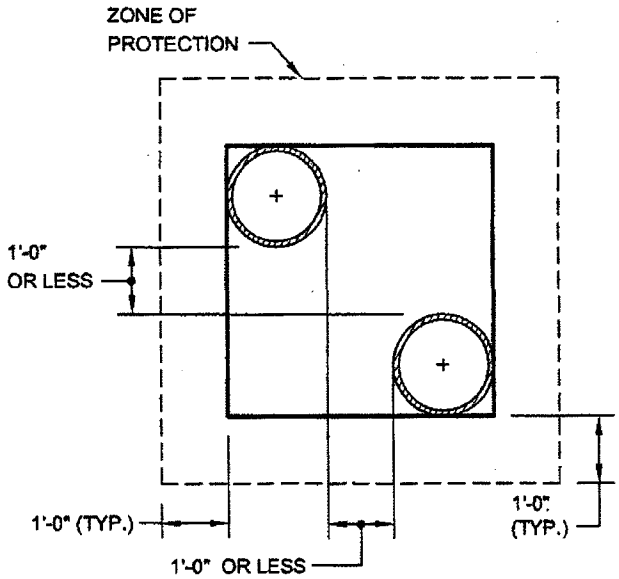

SECTION C-C

NOTE:

GAS MAINS MAY OR MAY NOT BE PARALLEL TO EACH OTHER.

REVISED SEPT. 2004 - I. ADRIEN
REVISED SEPT. 2004 - J. WONG/W. PATALANO/P. MOY

GAS COST SHARING WORK (SKETCH NO. 4)

UTILITY CROSSINGS DURING CATCH BASIN CHUTE CONNECTION PIPE INSTALLATION (EXTRA DEPTH)

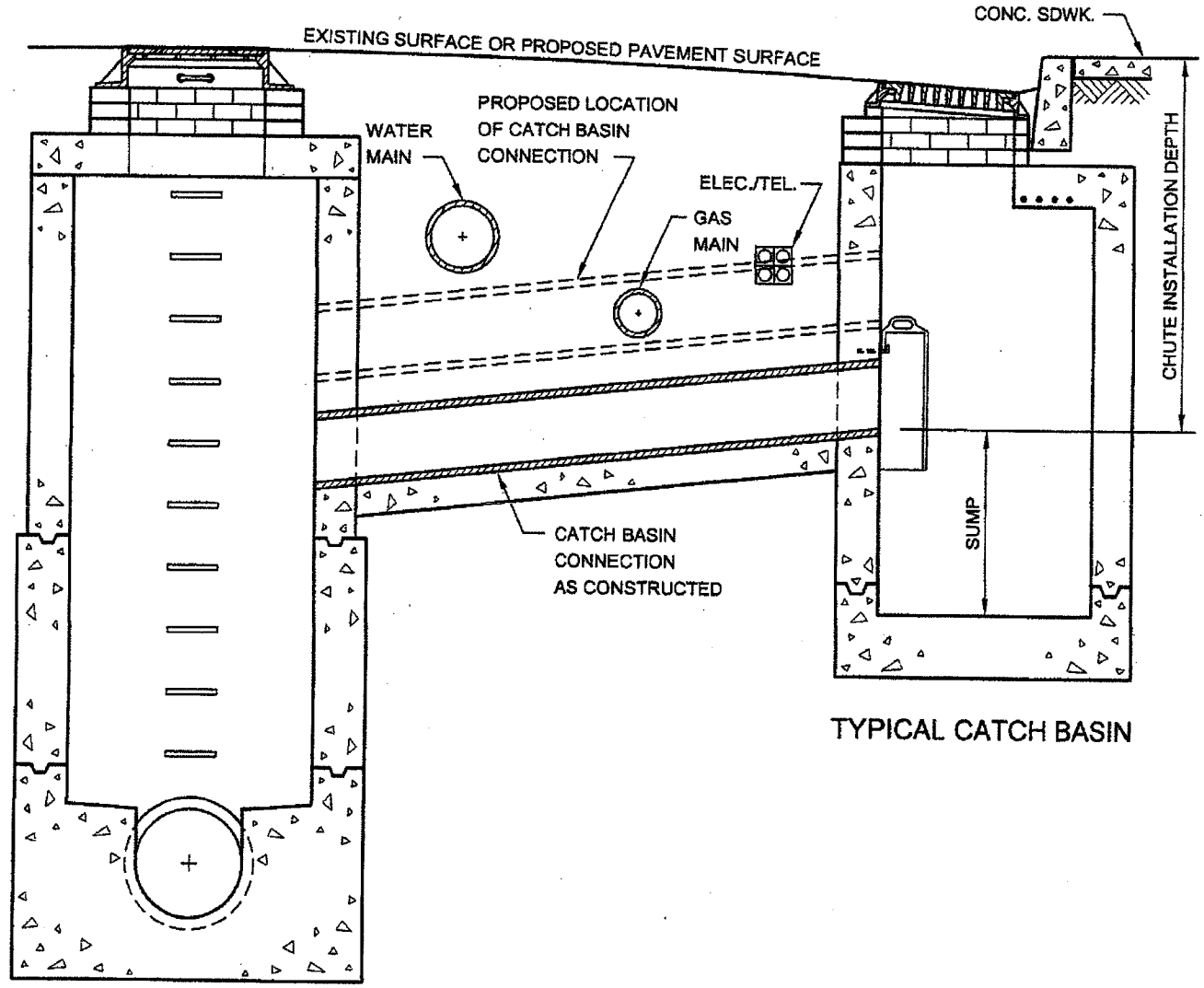

TYPICAL CATCH BASIN

TYPICAL SEWER MANHOLE

REVISED - OCT. 2004 - I. ADRIEN
REVISED - OCT. 1998 - J. WONG/W. PATALANO/P. MOY

GAS COST SHARING WORK (SKETCH NO. 3)

UTILITY CROSSINGS DURING CATCH BASIN CHUTE CONNECTION PIPE INSTALLATION

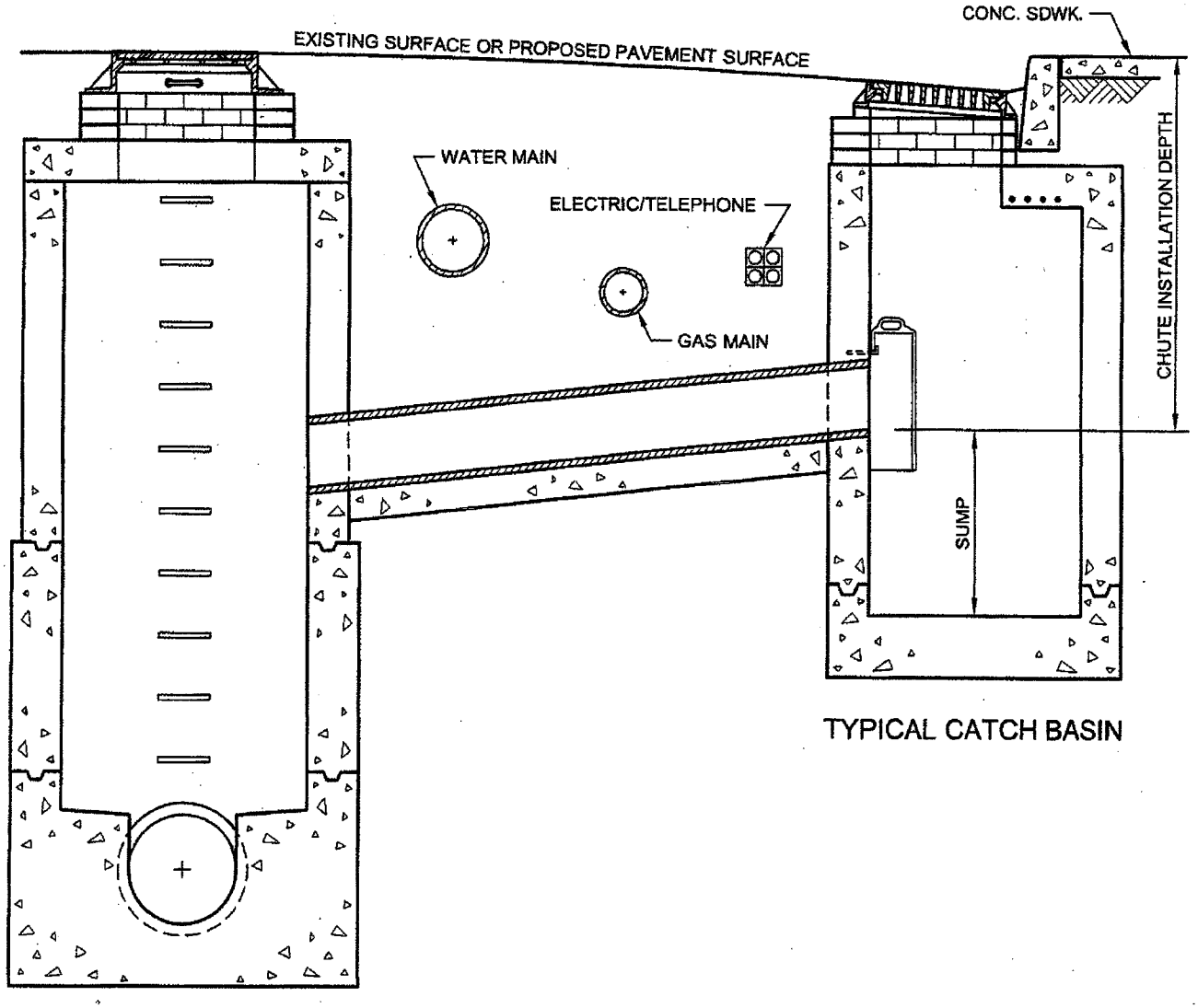

TYPICAL CATCH BASIN

TYPICAL SEWER MANHOLE

REVISED OCT. 2004 - I. ADRIEN
REVISED OCT. 1998 - J. WONG/W. PATALANO/P. MOY

GAS COST SHARING WORK (SKETCH NO. 5)

GAS MAIN ENCROACHMENT ON AND/OR PARALLEL TO EXCAVATION OF UNSHEETED TRENCH

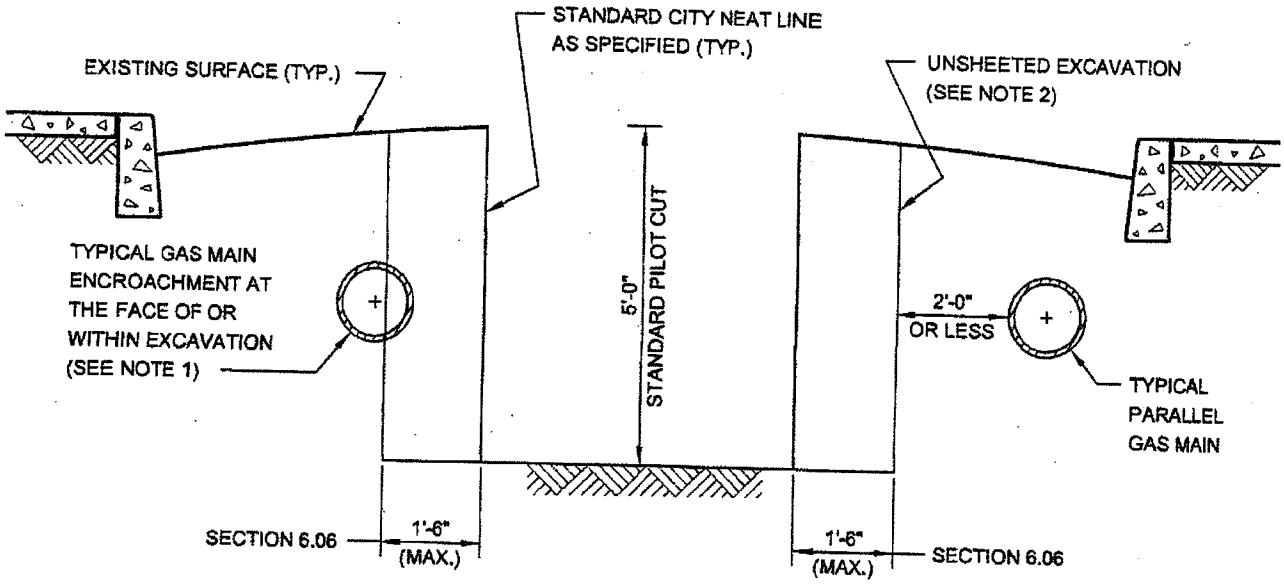

NOTES:

(1) GAS MAIN LOCATED AS SHOWN MAY HAVE TO BE REMOVED BY THE FACILITY OPERATOR PRIOR TO THE START OF CITY EXCAVATION, OTHERWISE, THE CONTRACTOR WILL BE PAID UNDER SECTION 6.06 FOR THE SAID WORK. IF GAS MAIN IS ABANDONED THEN SECTION 6.03 SHALL APPLY.

(2) EIGHTEEN (18) INCHES FROM STANDARD NEAT LINE IS THE MAXIMUM ALLOWABLE WIDTH OF AREA THAT MAY BE DISTURBED OR EXCAVATED DURING INSTALLATION OF CERTAIN TYPES OF SHEETING SYSTEMS THAT MEET THE REQUIREMENTS OF THE STANDARD SPECIFICATIONS OF THE DEPARTMENT OF DESIGN AND CONSTRUCTION OF THE CITY OF NEW YORK.

OCT. 2004 - I. ADRIEN
OCT. 1998 - J. WONG/W. PATALANO/P. MOY

V - PRELIMINARY GAS WORK TO BE PERFORMED BY FACILITY OPERATOR

APPLICABLE TO ALL GAS DRAWINGS:

- ALL RELOCATION WORK SHOWN IN THIS ADDENDUM IS TO BE PERFORMED BY FACILITY OPERATOR.
- ALL SUPPORT AND PROTECTION WORK TO BE PERFORMED BY CITY CONTRACTOR
- IF ADDITIONAL INFORMATION IS NEEDED REGARDING THE FACILITY OPERATOR RELOCATION WORK, THE CONTRACTOR IS ADVISED TO CONTACT THE GAS COMPANY REPRESENTATIVE:

MS. THERESA KONG
CONSOLIDATED EDISON
4 IRVING PLACE, 17TH FLOOR NE
NEW YORK, NY 10003
TEL.: 212-460-4834

(NO TEXT IN THIS AREA, TURN PAGE)

GAS FACILITY COST ALLOCATION AGREEMENT
PROJECT NO. HWMM008

CAPITAL GAS MAIN INSTALLATION

SHEET #	LOC.	ON STREET	FROM	TO	ITEM	SIZE	TYPE	LENGTH	REIMB LENGTH	REMARKS
1	A-B	E. 86Th St.	Park Ave.	Intersection	82k	12	PE	25	25	Retire 13'+/- 6" CI
1	C-D	E. 86Th St.	Park Ave.	Intersection	82k	12	PE	180	180	Retire 157'+/- 6" CI
										Retire 53'+/- 6" STL
2	E-F	E. 86Th St.	Park Ave.	Lexington Ave.	80n	20	STL	325	325	Retire 20'+/- 6" WI
2	G-H	E. 86Th St.	Park Ave.	Intersection	82k	12	PE	115	115	Retire 320'+/- 20" CI
										Retire 103'+/- 6" WI
3	J-K	E. 86Th St.	Lexington Ave.	Intersection	80l	12	STL	78	78	Retire 10'+/- 6" PE
										Retire 59'+/- 6" CI
										Retire 87'+/- 6" WI
										Retire 23'+/- 6" STL
										Retire 176'+/- 12" CI
3	N-P	E. 86Th St.	Lexington Ave.	Intersection	80l	12	STL	78	78	Retire 6'+/- 12" STL
										Retire 11'+/- 6" STL
3, 4	L-M	E. 86Th St.	Lexington Ave.	Third Ave.	80l	12	STL	505	505	Retire 106'+/- 8" CI
										Retire 382'+/- 6" CI
										Retire 79'+/- 6" STL
4	M-R	E. 86Th St.	Third Ave.	Intersection	80m	16	STL	98	98	Retire 67'+/- 8" STL
4	U-T	E. 86Th St.	Third Ave.	Intersection	80l	12	STL	186	186	Retire 91'+/- 16" CI
										Retire 14'+/- 8" CI
										Retire 60'+/- 8" WI
										Retire 116'+/- 10" WI
										Retire 19'+/- 10" STL

A3-22A

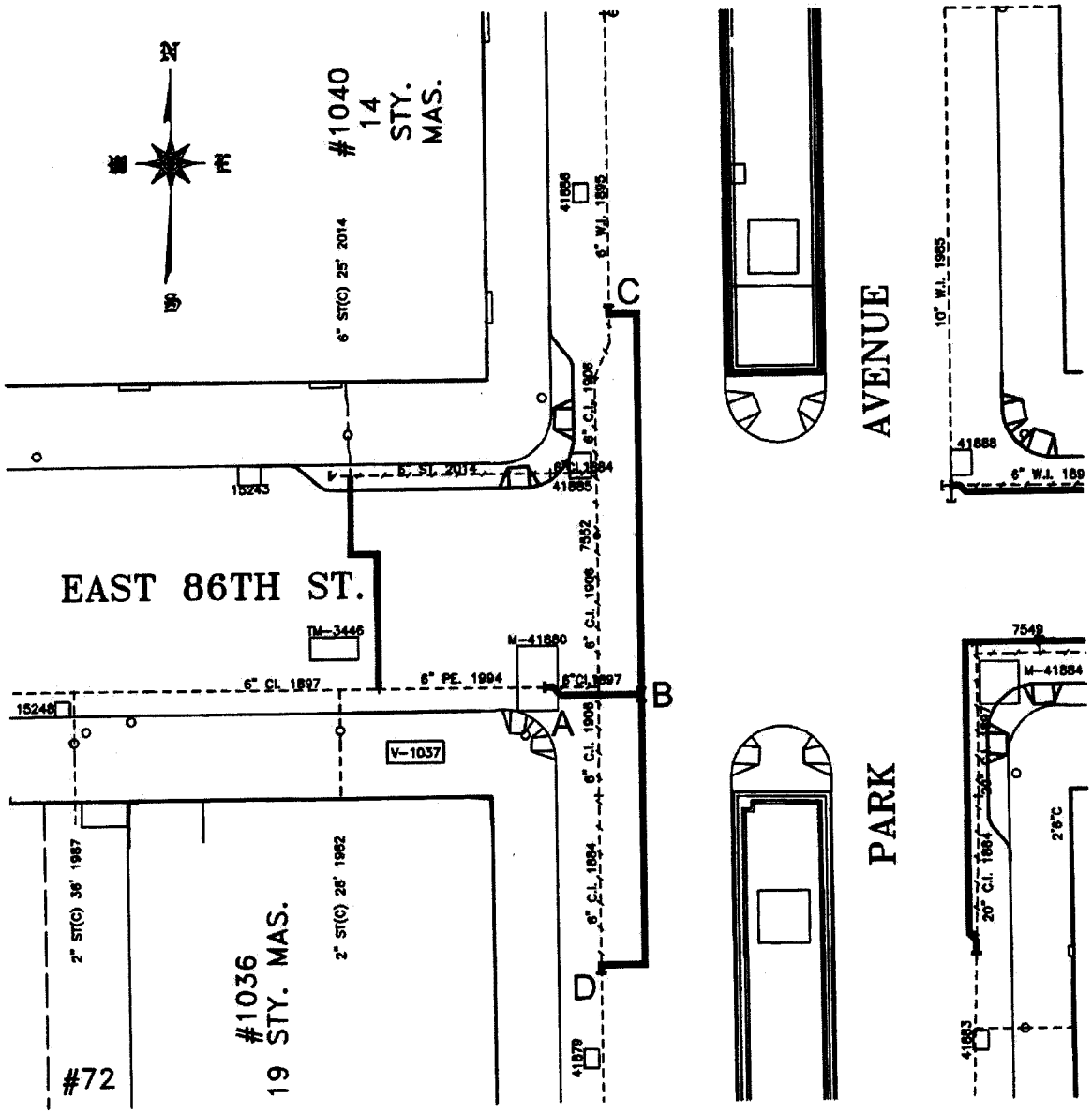

JULY, 2014	conEdison	Consolidated Edison Company of New York, Inc. CAPITAL PROJECT: HWMM008 CONSTRUCTION OF WATER MAINS E.86TH ST. & PARK AVE. BOROUGH OF THE MANHATTAN
SCALE = 1:40		
SHEET 1 OF 5		

A3-22B

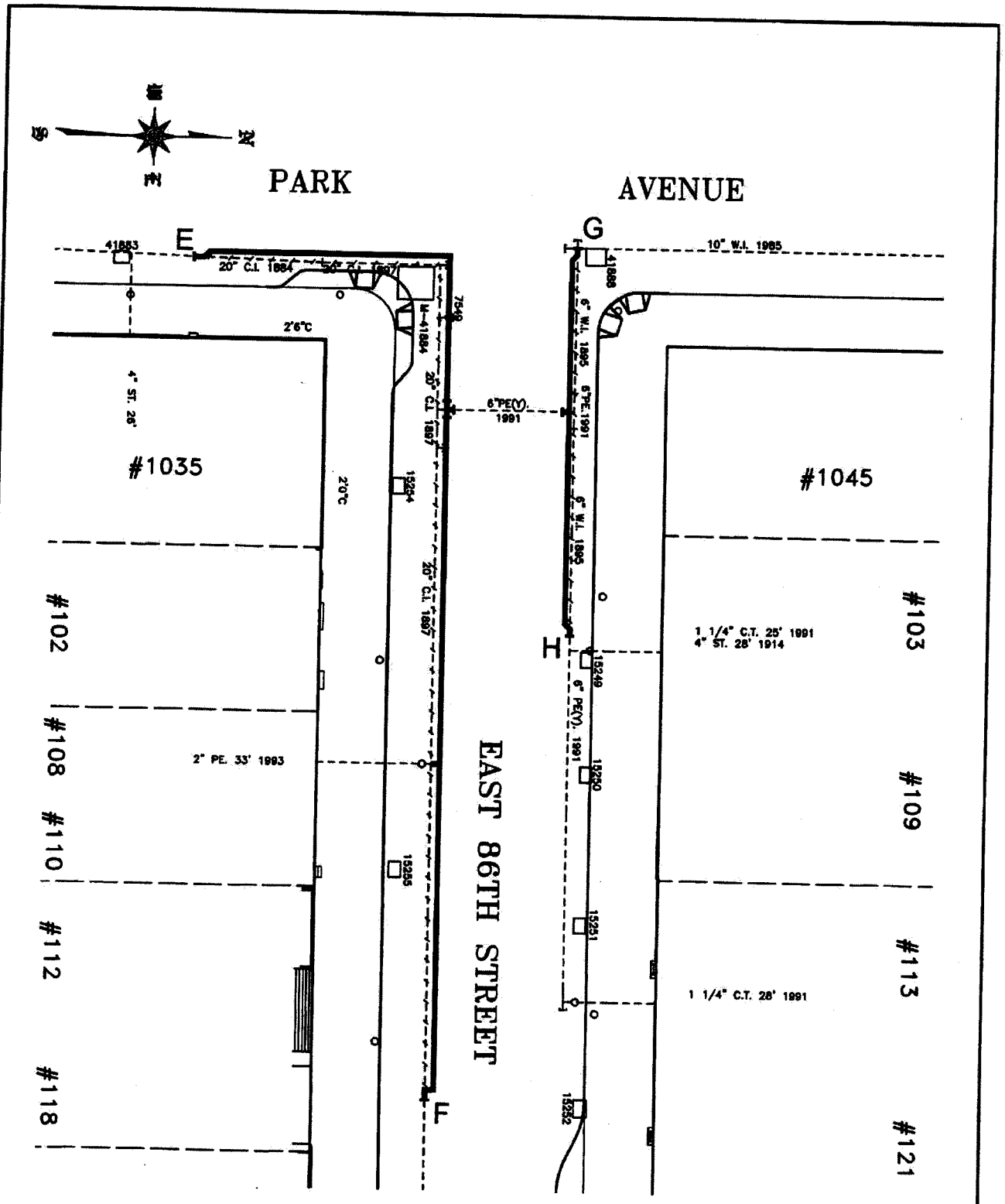

JULY, 2014	conEdison	Consolidated Edison Company of New York, Inc. CAPITAL PROJECT: HWMM008 CONSTRUCTION OF WATER MAINS E.86TH ST. B/T PARK AVE.& LEXINGTON AVE. BOROUGH OF THE MANHATTAN
SCALE = 1:40		
SHEET 2 OF 5		

A3-22C

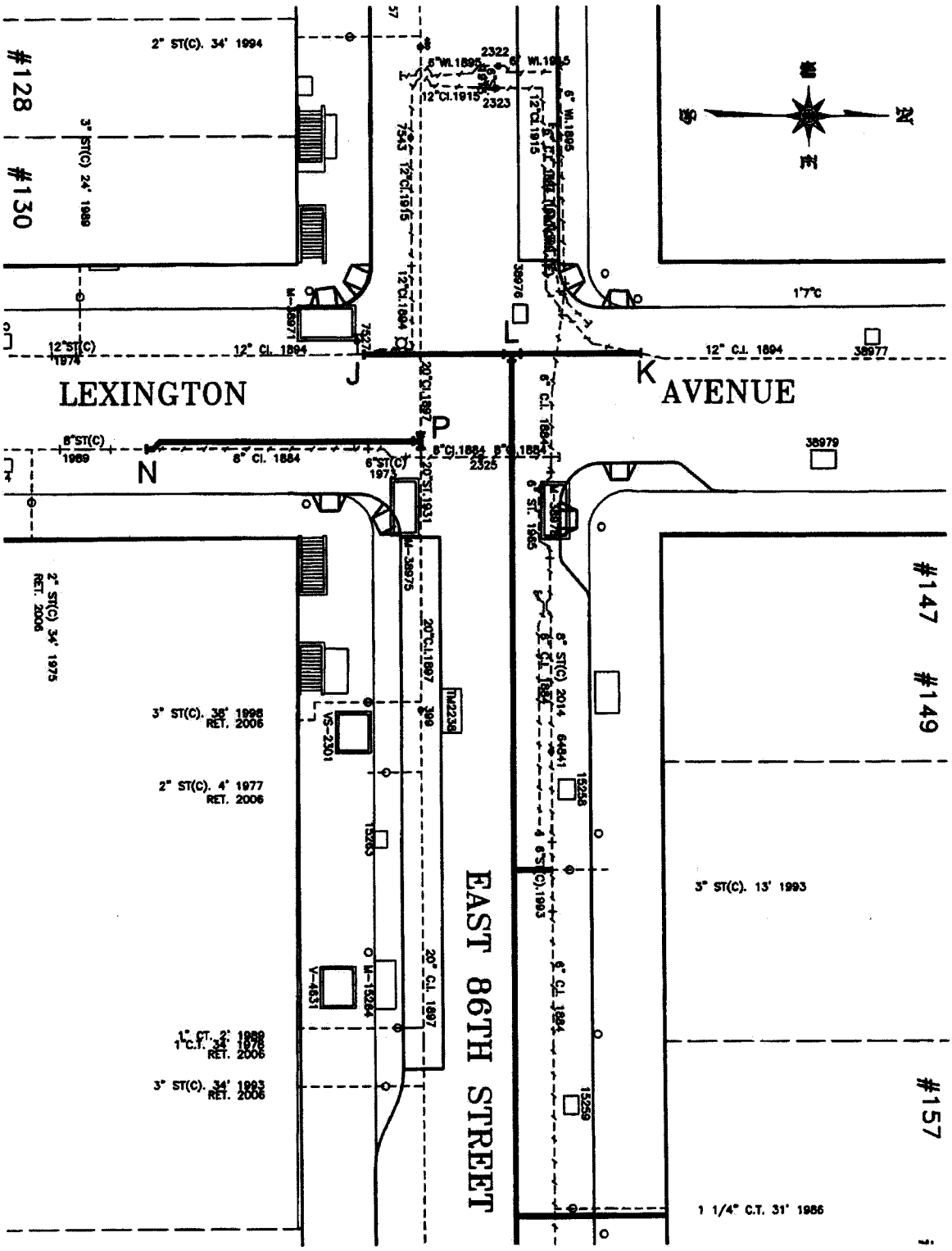

JULY, 2014	conEdison	Consolidated Edison Company of New York, Inc. CAPITAL PROJECT: HWMM008 CONSTRUCTION OF WATER MAINS E.86TH ST. B/T LEXINGTON AVE.& THIRD AVE. BOROUGH OF THE MANHATTAN
SCALE = 1:40		
SHEET 3 OF 5		

A3-22D

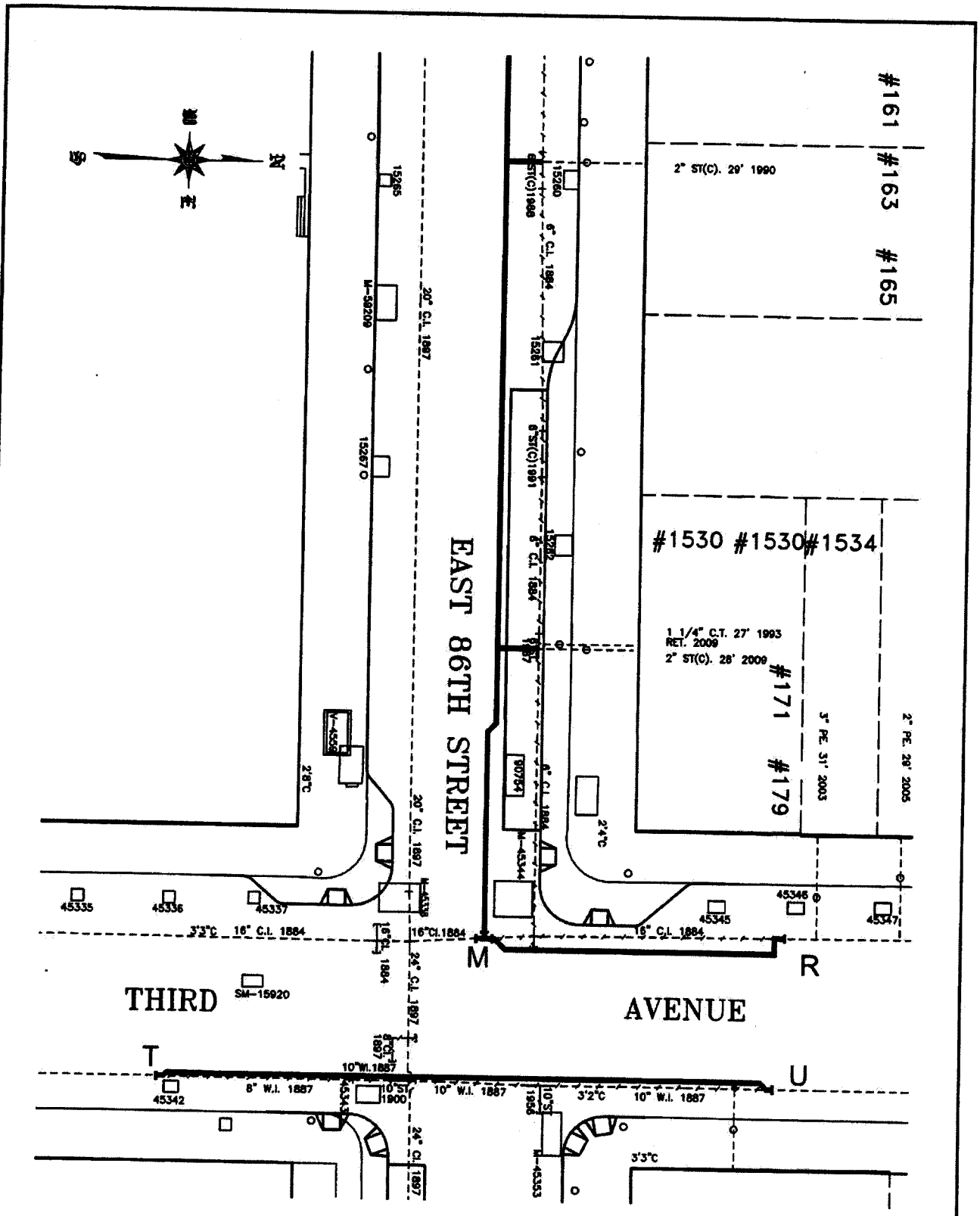

JULY, 2014	conEdison	Consolidated Edison Company of New York, Inc. CAPITAL PROJECT: HWMM008 CONSTRUCTION OF WATER MAINS E.86TH ST. B/T LEXINGTON AVE.& THIRD AVE. BOROUGH OF THE MANHATTAN
SCALE = 1:40		
SHEET 4 OF 5		

A3-22E

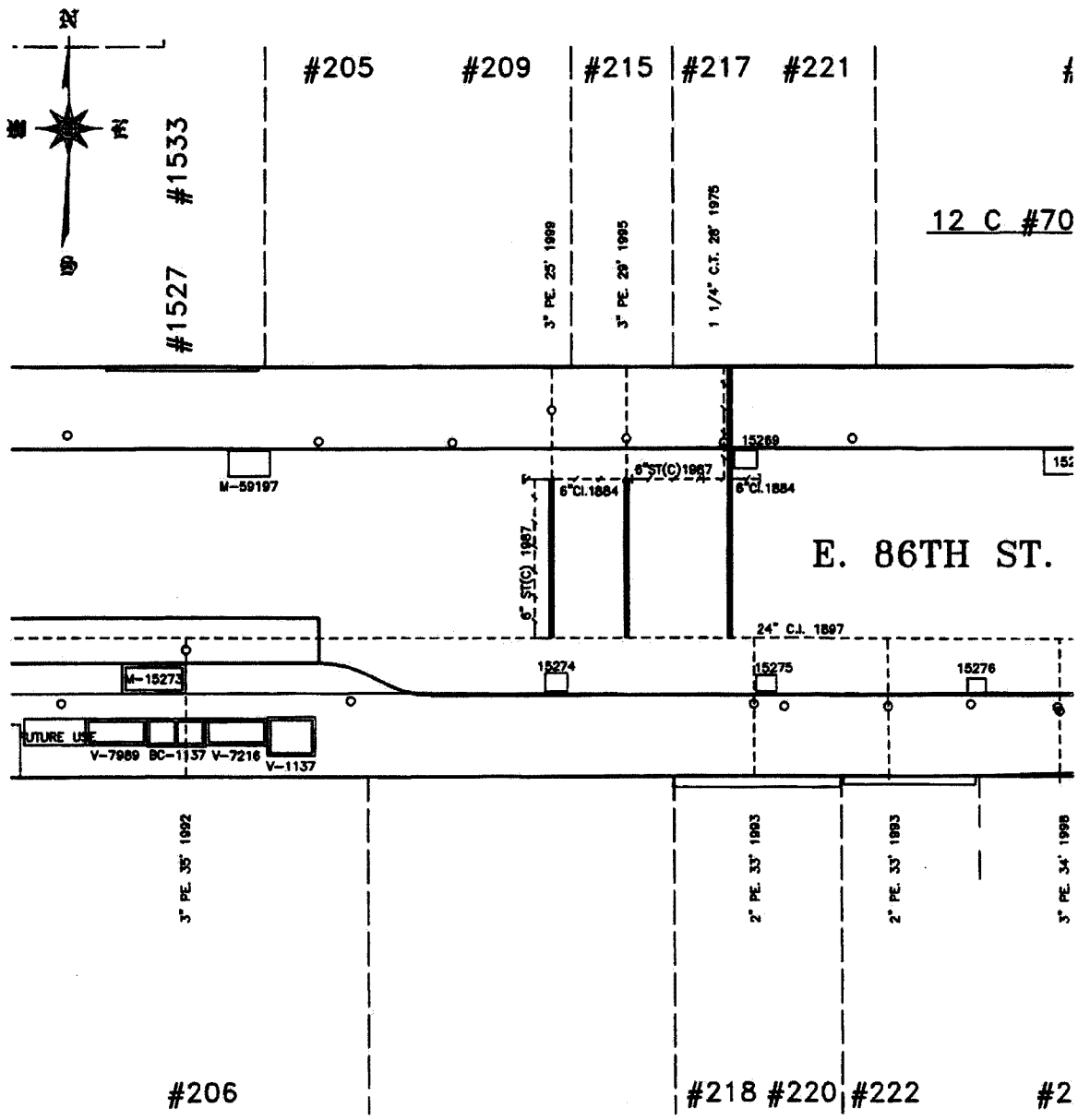

FOR INFORMATION ONLY

JULY, 2014	conEdison	Consolidated Edison Company of New York, Inc. CAPITAL PROJECT: HWMM008 CONSTRUCTION OF WATER MAINS E.86TH ST. B/T THIRD AVE.& SECOND AVE. BOROUGH OF THE MANHATTAN
SCALE = 1:40		
SHEET 5 OF 5		

A3-22F

VI - LISTING OF APPROXIMATE LOCATIONS OF EP-7 BID ITEMS QUANTITIES

(NO TEXT IN THIS AREA, TURN PAGE)

SCOPE OF WORK
SUPPORT AND PROTECTION
FOR CONTRACT NUMBER HWMM008

The City of New York Department of Design and Construction is planning to install sewers and/or water mains and all appurtenances in various locations in The City of New York along with all work incidental thereto.

6.01.8 - Support & Protect Gas Services Crossing Trenches And/Or Excavations (Ea.)

1 in Madison Ave. Bet. E 84th St. & E 85th St.
4 in E 86th St. Bet. Park Ave. & Lexington Ave.
4 in E 86th St. Bet. Lexington Ave. & Third Ave.
11 in E 86th St. Bet. Third Ave. & Second Ave.

6.01.9 - Support & Protect Gas Main Crossing Water Main Up To 20" In Diameter (Ea.)

5 in E 86th St. @ Park Ave.
1 in Park Ave. Bet. E 86th St. & E 87th St.
4 in E 86th St. Bet. Park Ave. & Lexington Ave.
5 in E 86th St. @ Lexington Ave.
6 in E 86th St. @ Third Ave
1 in Third Ave. Bet. E 86th St. & E 87th St.
1 in E 86th St. Bet. Third Ave. & Second Ave.

6.03 - Removal Of Abandoned Gas Facilities. All Sizes (L.F.)

800 in Various Locations As Required

6.04 - Adjust Hardware To Grade Using Spacer Rings / Adaptor (Street Repaving) (Ea.)

70 in Various Locations As Required

6.05 - Adjust Hardware To Grade By Resetting (Road Reconstruction) (Ea.)

50 in Various Locations As Required

6.06 - Special Care Excavation & Backfilling (C.Y.)

800 CY In Various Locations As Required, Including But Not Limited To All Gas Services Crossing Unsheeted Water Main Trenches.

6.07 - Test Pits For Gas Facilities (C.Y.)

300 in Various Locations As Required.

END OF ADDENDUM NO. 3
This addendum consists of thirty-six (36) pages.

ATTACH TO CONTRACT DOCUMENTS

THE CITY OF NEW YORK
DEPARTMENT OF DESIGN AND CONSTRUCTION
INFRASTRUCTURE DIVISION
BUREAU OF DESIGN

PROJECT ID: HWMM008

SAFETY AND STREETSCAPE IMPROVEMENTS
EAST 86TH STREET BETWEEN PARK AVENUE AND SECOND AVENUE

SCHOOL SAFETY NECKDOWNS
MADISON AVENUE BETWEEN EAST 84TH STREET AND EAST 85TH STREET

INCLUDING WATER MAIN, STREET LIGHTING, AND TRAFFIC SIGNAL WORK

Together With All Work Incidental Thereto

BOROUGH OF MANHATTAN

ADDENDUM NO. 4

DATED: February 13, 2015

This Addendum is issued for the purpose of amending the requirements of the contract documents and is hereby made part of said contract documents to the same extent as if it was originally included therein.

The Standard Sewer And Water Main Specifications of the Department of Environmental Protection (dated July 1, 2014), Sewer Design Standards of the Department of Environmental Protection (dated (September 2007) Revised January 2009), Water Main Standard Drawings of the Department of Environmental Protection (latest revisions), Specifications For Trunk Main Work of the Department of Environmental Protection (dated July 2014) and the Standard Highway Specifications (Volumes I and II) of the Department of Transportation (dated November 1, 2010) of The City of New York, shall be included as part of the contract documents. These said specifications and standard drawings are hereby revised under the following section headings:

A. NOTICE TO BIDDERS
B. AMENDMENTS TO THE STANDARD HIGHWAY SPECIFICATIONS
C. AMENDMENTS TO THE STANDARD SEWER AND WATER MAIN SPECIFICATIONS
D. AMENDMENTS TO THE SPECIFICATIONS FOR TRUNK MAIN WORK

A. NOTICE TO BIDDERS

(1) (A) The Contractor is advised that copies of the Standard Sewer And Water Main Specifications (dated July 1, 2014), Sewer Design Standards (dated (September 2007) Revised January 2009), Specifications For Trunk Main Work (dated July 2014) and Water Main Standard Drawings (latest revisions) are available to all prospective bidders at no cost upon presentation of receipt of purchase of Bid Package at the following location:

Department of Design and Construction
Division of Infrastructure
Design Services, Specifications, 3rd Floor
30-30 Thomson Avenue
Long Island City, NY 11101

(B) The Contractor is advised that copies of the Standard Highway Specifications (Volume I and II) (dated November 1, 2010), Standard Highway Details of Construction (latest revisions), Division of Street Lighting Specifications (latest revisions), Division of Street Lighting Standard Drawings (latest revisions), Standard Specifications for Traffic Signals (latest revisions), and Standard Drawings for Traffic Signals (latest revisions) are available to all prospective bidders for a fee at the following location:

Department of Transportation
55 Water Street, Ground Floor
New York City, NY 10041

(2) The Contractor is notified that a Notice To Proceed (NTP) date will be issued for work to commence within twenty-one (21) to thirty (30) days of Contract Registration.

(3) The Contractor shall furnish, install, maintain and subsequently remove temporary Protective Tree Barriers. Protective Tree Barriers shall be Type B, unless otherwise directed by the Engineer, and shall be constructed and installed as shown on the Protective Tree Barrier sketch in Department Of Transportation, Standard Highway Details Of Construction, Drawing No. H-1046A, as directed by the Engineer, and in accordance with Department of Parks and Recreation requirements.

(4) All utility locations and invert elevations are not guaranteed, nor is there any guarantee that all existing utilities, whether functional or abandoned within the project area are shown.

(5) All existing house connections shall be maintained and supported during construction. The Contractor shall replace any existing house connection damaged as a result of the Contractor's construction operations as ordered by the Engineer at no cost to the City.

(6) The Contractor is advised that any City owned light poles, traffic signals, street name signs, traffic signs and encumbrances including, but not limited to, underground conduit displaced as the result of the installation of the new sewers, water mains, catch basins, catch basin connections and appurtenances shall be replaced in kind and as directed by the Engineer. The cost of such work shall be deemed included in the prices bid for all items of work under this contract.

(7) The Contractor is notified that Victaulic Style 77 Coupling is no longer acceptable for use in any steel water main work. All reference to Victaulic Style 77 Coupling within the Standard Sewer And Water Main Specifications of the Department of Environmental Protection (dated July 1, 2014), the Water Main Standard Drawings of the Department of Environmental Protection (latest revisions), the Specifications For Trunk Main Work (dated July 2014), and the contract drawings, shall be replaced with Bolted Split-Sleeve Restrained Coupling.

(8) The Contractor is notified that the fuel cost per gallon used in the formula under **Sub-Article 26.2.8** of the Standard Construction Contract for **Extra Work** will be derived from the fuel price index for the United States East Coast published weekly by the United States Energy Information Administration

("USEIA"), and available on its website at http://www.eia.gov/petroleum/gasdiesel/ . The USEIA published cost per gallon for the applicable fuel on the East Coast for the week in which the first day of each calendar quarter during the contract term occurs (i.e., January 1st, April 1st, July 1st and September 1st) will be used in the reimbursement formula for all **Extra Work** invoiced that was performed during that calendar quarter. Should the USEIA stop publishing this fuel price index, the fuel cost per gallon will be determined by reference to a substitute index to be agreed upon by the Contractor and the City.

(9) The Contractor is responsible for any damage to the existing street and traffic signal equipment, including underground conduits and the safety of both pedestrian and vehicular traffic for the duration of the contract.

Should any conduits, cables or foundations need repair due to the Contractor's negligent operations during construction, all work shall be performed according to NYCDOT Bureau of Traffic's Standard Drawings and Specifications at the sole expense of the Contractor.

It is the Contractor's responsibility to secure an approved electrical contractor to perform all traffic signal work (if any). For list of approved electrical contractors, contact Mr. Michael R. LeFosse of New York City Department of Transportation at (718) 786-2236.

B. AMENDMENTS TO THE STANDARD HIGHWAY SPECIFICATIONS

(NO TEXT)

C. AMENDMENTS TO THE STANDARD SEWER AND WATER MAIN SPECIFICATIONS

(1) **Refer** to **Subsection 10.15 - Notice To Utility Companies, Etc., To Remove Structures Occupying Place Of Sewers, Water Mains Or Appurtenances**, Page I-11:
Add the following to **Subsection 10.15**:

(1) CONSOLIDATED EDISON COMPANY OF NEW YORK (CON EDISON)

There are CON EDISON facilities in the area of construction. The Contractor shall notify CON EDISON at least seventy-two (72) hours prior to the start of construction by contacting Ms. Theresa Kong at (212) 460-4834 or Mr. Noel Leon at (718) 275-2852.

(2) VERIZON

There are VERIZON facilities in the area of construction. The Contractor shall notify VERIZON at least seventy-two (72) hours prior to the start of construction by contacting Mr. Michael Fitzpatrick at (718) 977-8142.

(3) TIME WARNER CABLE OF NEW YORK CITY

There are TIME WARNER CABLE facilities in the area of construction. The Contractor shall notify TIME WARNER CABLE at least seventy-two (72) hours prior to the start of construction by contacting Mr. Mark Larm at (917) 335-9181.

(4) NATIONAL GRID

There are NATIONAL GRID facilities in the area of construction. The Contractor shall notify NATIONAL GRID at least seventy-two (72) hours prior to the start of construction by contacting Mr. Neville Jacobs Jr. at (718) 963-5612.

(2) **Refer** to **Subsection 10.21 - Contractor To Notify City Departments**, Page I-13:
Add the following to **Subsection 10.21**:

(1) N.Y.C. D.E.P., BUREAU OF WATER AND SEWERS OPERATIONS

The Contractor shall notify Mr. James Garin, P.E., Director, Engineering at the Department of Environmental Protection, 59-17 Junction Blvd., 3rd floor low rise, Corona N.Y. 11368, at least thirty (30) days prior to the start of construction.

(2) NEW YORK CITY FIRE DEPARTMENT

The Contractor shall notify the Bureau of Fire Communications at least thirty (30) days prior to the start of construction by contacting Mr. Nick Varone at (718) 624-4194.

(3) N.Y.C. DEPARTMENT OF TRANSPORTATION

The Contractor shall notify Mr. Steve Galgano, P.E. Chief of Signal/Street Lighting Operations, 34-02 Queens Blvd., Long Island City, N.Y. 11101 at (718) 786-3550, at least seventy-two (72) hours prior to the start of construction.

(4) N.Y.C. DEPARTMENT OF PARKS AND RECREATION

The Contractor shall notify the Parks Department at least seventy-two (72) hours prior to the start of construction by contacting Mr. Jimmy Mui at (718) 393-7240.

(5) N.Y.C. TRANSIT AUTHORITY

The Contractor is advised that bus routes as well as bus stops, within the scope of this project may be affected during construction operations. The Contractor shall notify the Transit Authority at least two (2) weeks prior to the start of construction, in order to make the necessary arrangements.

Arrangements shall be made through:

Ms. Sarah Wyss
Director Of Short Range, Bus Service Planning (SRB)
New York City Transit
2 Broadway, 17th Floor
New York, N.Y. 10004
Telephone No. (646) 252-5517
sarah.wyss@nyct.com

(3) **Refer** to **Subsection 10.30 - Contractor To Provide For Traffic**, Page I-15:
Add the following to **Subsection 10.30**:

(1) Traffic Stipulations:

The Contractor shall refer to Traffic Stipulations identified in the maintenance of traffic requirements under Highway Contract No. HWMM008.

(4) **Refer** to **Subsection 71.41.4 - Specific Pavement Restoration Provisions**, Page VII-67:
Add the following to **Subsection 71.41.4**:

(E) Specific Pavement Restoration Provisions:

(1) Highway and roadway reconstruction shall be accomplished and paid for in accordance with Highway Construction Plans, Details and Specifications for Highway Project ID. HWMM008.

D. AMENDMENTS TO THE SPECIFICATIONS FOR TRUNK MAIN WORK

1) Refer to **Part 1 – Furnishing And Delivering Steel Pipes And Appurtenances 30 Inches In Diameter And Larger, Paragraph 13. Special Fittings:**, Page 5;
Add the following to **Paragraph 13:**

The steel reducer shall have a length of seven (7) feet for every twelve (12) inches reduction in diameter.

END OF ADDENDUM NO. 4
This Addendum consists of seven (7) pages.

NO TEXT ON THIS PAGE

THE CITY OF NEW YORK
DEPARTMENT OF DESIGN AND CONSTRUCTION
INFRASTRUCTURE DIVISION
BUREAU OF DESIGN

PROJECT ID: HWMM008

SAFETY AND STREETSCAPE IMPROVMENTS
EAST 86TH STREET BETWEEN PARK AVENUE AND SECOND AVENUE

SCHOOL SAFETY NECKDOWNS
MADISON AVENUE BETWEEN EAST 84TH STREET AND EAST 85TH STREET

INCLUDING WATER MAIN, STREET LIGHTING, AND TRAFFIC SIGNAL WORK
TOGETHER WITH ALL WORK INCIDENTAL THERETO

BOROUGH OF MANHATTAN
CITY OF NEW YORK

ADDENDUM NO.5
(SECTION U VERSION 2.0)
DATED: MARCH 26, 2015

1. The Contractor shall be responsible for compliance with all the provisions of the following Sections and Schedules, which are hereby made a part of the original contract documents:

   A. "SECTION U: Additional Contract Requirements Applying to Work Performed in the Presence of Privately Owned Utility Facilities" (Pages A5-3 through A5-13)

   B. Schedule U-1 (Page A5-14)

   C. Schedules U-2 listing scope of utility interferences is no longer included in City contract. Such information will be part of Interference Agreement between Utility Operator and Contractor.

   D. Section U-3 Page A5-15 (as per the Private Utilities reference document for SECTION U called "CET SPECIFICATIONS AND SKETCHES", dated November 2010).

2. Each facility operator shall provide inspectors at the work site to inspect methods of interference work, verify quantities and items of Utility Work, and coordinate all phases of the facility operator operations.

3. In addition, the following statements are made to provide clarification of various paragraphs under Section U:

   A. Section U, ¶3, requires the Contractor to immediately commence negotiations with each Company for an Interference Agreement under which the Company will compensate the Contractor for any Interference Work which the Company does not elect to perform with its own forces or by specialty

contractors retained by the Company. Thus the Contractor is on notice that its work under the Contract may be affected by Interference Work performed by (a) the Contractor pursuant to a separate Interference Agreement with the Company, (b) the Company, or (c) partly by each.

B. The City has no contract with any of the Companies for work on or adjacent to the site of work under this Contract, and the Companies are not "Other Contractors" as defined for the purposes of this Contract. The Contractor is reminded, however, that pursuant to Section U, ¶3, the City will not compensate the Contractor for any direct and/or indirect costs related to Interference Work, regardless of whether such Interference Work is covered by an Interference Agreement between the Contractor and the Company or is performed by the Company using its own forces or by specialty contractors retained by the Company.

C. Section U, ¶13, provides that the provisions of Section U are material provisions of the Contract and that the Contractor's failure to comply with the procedures set forth in Section U are sufficient for the Commissioner to declare the Contractor in default pursuant to Article 48 of the Contract.

Pursuant to this Addendum, the Contractor is informed that the Performance Bond required of the Contractor pursuant to the Contract is not deemed to guarantee performance of any of the Interference Work.

Section U: Additional Contract Requirements Applicable to Work Performed in the Presence of Privately Owned Utility Facilities

The Contractor is hereby notified that pursuant to the law and franchise agreements issued by the City, certain private utility and public service companies named in Schedule U-1 ("the Companies") own and/or operate surface and/or subsurface facilities within the limits of this contract. The existence of these facilities impacts the productivity of the City work called for in the contract. In order to improve coordination of the City construction with the private utility facilities owned and/or operated by the Companies named in Schedule U-1, Article 1.06.30 of the Standard Highway Specifications of the New York City Department of Transportation, Dated November 1, 2010; and/or Articles 10.15 through 10.18 of the Standard Sewer and Water Main Specifications of the New York City Department of Environmental Protection, Dated July 1, 2014; as applicable, are amended and will be implemented as follows:

1. Means and methods for City work:

a) The Contractor is hereby notified that the utility interferences may impact the performance of, and/or interferes with, City work. The contractor will be required to perform such utility work as directed by the Resident Engineer in order to clear all utility interferences from the project site as required for satisfactory completion of City work within specified contract schedule.

b) In areas serviced by overhead electric system, the contractor understands and by bidding for this contract agrees that he/she will be required to perform the public work in the presence of energized electrical overhead lines and appurtenances located in areas adjacent and/or within the project area. As a consequence he/she will select means and method of construction appropriate to maintain the safety clearances required or as permitted by electric operators in order to avoid damaging the insulation or shielding of these lines and also to prevent knocking them down. The duration of the contract as shown in Schedule A thus includes the time which may be necessary for the Contractor to remove, repair, protect, support, shift, relocate, temporarily remove and replace, work around and/or work in the presence of the Companies' facilities ("Interference Work") by this contract during the progress of the City work.

2. Field inspection prior to construction:

Prior to the start of any contract work in areas serviced by overhead electric lines, and after the award to the apparent low bidder for this contract, the contractor must request a field walk of the project area along with the operator of the overhead electrical facilities and the DDC Engineer-In-Charge. At that time the facility operator will confirm the type and condition of the overhead electrical lines and the sufficiency of their insulating properties with respect to the means and methods proposed by the contractor. The contractor must be prepared to describe in enough details his/her proposed means and methods of construction operations in order to anticipate the likelihood that electric lines insulation would be cut or otherwise compromised. Also such details will allow the facility operator to anticipate the need for added insulation and/or shielding of non-insulated lines.

3. Compensation for interference work:

Compensation for Interference Work is a matter of adjustment between the Contractor and each private utility company located within the limits of the project area and whose utility facilities are affected by City contract work. In particular, the City will not compensate the Contractor for any direct and/or indirect costs related to Interference Work, including, but not limited to, lost profit, increased overhead, or any other impact costs. Upon receipt of a Notice of Award from the City, the Contractor shall immediately commence negotiations with each of the Companies concerning the manner in which and the price for which the Contractor, through its own forces or by others hired by it, will perform and be paid by the Company for all necessary Interference Work as defined above, and at known locations of City contract work, that the Company(ies) choose(s) not to perform with its(their) own forces or by specialty Contractors hired by it (them) (as per "Interference Agreement"). (Specialty contractors' work is limited to (i) insulation installation and removal, (ii) live gas and steam work, (iii) cleanup and disposal of hazardous materials, (iv) splicing live electrical and telecommunications facilities, and (v) work not traditionally performed by general construction contractors.

4. Interference Agreement:

1. Although the parties may negotiate an Interference Agreement in any format or manner they deem fit, the Contractor is hereby advised that the Companies have indicated to the City that they will agree to compensate the Contractor on a unit price basis for

Types of Interferences encountered on this Contract in accordance to the Private Utilities reference document for SECTION U called "CET SPECIFICATIONS AND SKETCHES", dated November 2010, copy of which is available on demand.

2. The Contractor shall notify the City upon concluding an Interference Agreement with each of the Companies.

5. *City contract work to continue without Interference Agreement :*

If, prior to the start of construction, as directed by the City's Order to work / Notice To Proceed (OTW/ NTP) date any of the Companies and the Contractor have not concluded an Interference Agreement as described above, then the City shall issue a written "48 Hours notice to Public Corporation" as prescribed by the City of New York Administrative Code", commonly referred to as "Order-Outs" and City construction will proceed as ordered and the Contractor will be directed by the Resident Engineer to perform the City work on Time, Material and Equipment basis (T&M) as specified in standard City contract agreement Article 26.2. T&M records will include identification of types of utility facilities interfering with City work, utility facility owners, specifying the nature and quantity of any materials, plant and equipment furnished or used in connection with the performance of such work and crew size, such as: name and number of each worker employed on such work. T&M records will also indicate the hours of active time, standby time and idle time. The Company (ies) and the Contractor will maintain separate records of the actual quantity and cost of labor, materials, and equipment expended, and will provide copies of this information to the other party on a daily basis for reconciliation. These T&M records along with cost evaluations will be submitted daily to the Resident Engineer for review and approval. The total cost of City work will be based on quantity of work performed multiplied by unit price contract bid items. The total interference cost will be calculated as the difference between the total T&M cost and total cost for City work. The Resident Engineer will conduct a monthly reconciliation session of the daily T&M records with the affected Company (ies) and contractor. If the contractor and affected utility companies cannot reconcile their T&M records, by the last day of each month, then the Resident Engineer will submit the approved City's T&M records along with total cost evaluations to the DDC Director of Construction who will review these records and recommend approval and validity certification by the DDC Deputy Commissioner.

1. Copies of the DDC approved and certified T&M records will then be transmitted by the DDC to the contractor and the utility companies. These certified records may be used by the contractor for compensation claims against the responsible private facility owners, or may be used by any party as supporting documentation in dispute regarding compensation for performing Interference Work. The contractor will be required to perform City work while invoices are submitted by the contractor to the Utility companies for payment within 30 days, or while compensation disputes between contractor and affected company (ies) are submitted to Binding Arbitration process described in Paragraph 9.
2. All issues related to utility work and/ or delays due to compensation disputes or claims against utility companies are not allowable as justification for granting contract time extensions or delay claims against the City. The City may assess liquidated damages specified in the contract for net overall delays suffered by City contract work as a result of utility issues, disputes and claims.
3. The standard City contract dispute resolution process specified in Article 27 "Presentation of disputes to Commissioner", of the standard City contract agreement is not applicable to any disputes related to utility work and/ or compensation for such work or claim against utility companies. Utility work issues, disputes and claims may only be submitted to Binding Arbitration process described in Paragraph 9.
4. The contractor will notify the Resident Engineer when utility work that require the intervention of company utility specialty crews causes excessive contractor's labor and equipment standby or idleness and, thereby jeopardizing the City project schedule. The Resident Engineer will submit the facts to the DDC Director of construction who will recommend to the Deputy Commissioner regarding the issuance of a "48 hours notice" to the concerned utility company as authorized by the New York City administrative Code Section 19-143 and/ or Section 24-521 as applicable.
5. Utility delays caused by utility and/ or by unavailability of utility specialty crews cannot be discounted for earning any contractual bonus when such bonus clause is included in a contract. However, if such specified bonus is not earned or disallowed by the City or if the City assesses specified liquidated damages as a result of such excessive delays, the contractor may seek damages from the responsible utility company (ies).

6. Extra utility work with Utility Agreement:

If during construction the Contractor encounters utility facilities interferences or utility scope of work that it believes is not covered by the Interference Agreement as described above, then the Contractor shall immediately notify the Company in writing, with a copy to the City, describing the nature and location of the extra work in question. The Company then has five (5) business days to investigate the conditions and then:

1. Advise the Contractor and the City in writing that no interference with its facilities exists at the location in question, and hence that the Contractor may proceed with City work without providing for any impact from Company facilities;
2. Advise the Contractor and the City in writing that the Interference Agreement negotiated pursuant to Paragraph 4, provides for the scope of work encountered.
3. Advise the Contractor and the City in writing that it intends to perform the necessary utility Work with company forces or with its own contractor including, but not limited to, relocating its facility out of the way of the proposed City work. In this case, the Company shall provide a written schedule for the performance of the utility work it proposes to perform, which shall be subject to approval by the City based on its impact to the Contractor's currently approved progress schedule. Upon approval of the Company's schedule by the City, the Contractor shall provide access to the worksite to the Company and/or any contractors hired by it to perform this utility work. If necessary, the City may grant a contract time extension for delays caused by the performance of such utility work by the company.
4. Reasonably specify in writing the scope of work to be performed by the Contractor on behalf of the Company that is not covered under the Interference Agreement negotiated pursuant to Paragraph 5, including, but not limited to, relocating, supporting, and/or protecting the Company's facilities, and/or shifting the City facility if approved by the Resident Engineer, and/or otherwise changing its operations to work in the presence of the Company's facilities. Should the Company elect this option, it must adequately define and provide an initial price offer for the work required to be performed.

7. Means and Methods for utility work:

Upon receipt of the Company's determination pursuant to paragraphs 6.2, or 6.4, above, the Contractor shall determine reasonable means and methods of performing the work defined by the Company. These means and methods are subject to approval of the Company, which shall not be unreasonably withheld. If, however, the Company objects to the Contractor's proposed means and methods then it shall define an alternate method of construction. Upon receipt of the Company's approval or its proposed alternate method of construction, the Contractor shall commence performance of the work defined by the Company as soon as possible, and shall perform the work in a good, workmanlike, and efficient manner, using the means and methods approved by the Company, in order to permit the City work to proceed in the most expeditious manner possible, but without imposing unreasonable and/or unnecessary costs on the Company. It is expressly understood by all parties that the City's rights pursuant to Article 4 of the Contract apply to Utility Work performed pursuant to this section.

8. Disputed utility work covered by a utility agreement:

The City Work will continue as described in paragraph 5 above. In the event of any dispute between the Company (ies) and the Contractor regarding any issue related to the performance of, or payment for, utility work, including, but not limited to, any indirect or impact costs incurred by the Contractor due to the Utility Work and/or to the existence of facilities owned or operated by the Company (ies) on the line of the work. The Company (ies) and the Contractor hereby agree to submit to each other a "Final Offer," in writing, by certified mail. Each party shall then have three business days to consider each other's Final Offer. In the event that neither party accepts the other's Final Offer within those three days, the Company (ies) and the Contractor agree to immediately submit the dispute to binding arbitration as described in Paragraph 9. During the pendency of any arbitration, the Company (ies) and the Contractor shall maintain separate records of the actual quantity and cost of labor, materials, and equipment expended, and to provide copies of this information to the other party on a daily basis for reconciliation. Any and all disagreement with the records maintained and provided by the other, must be documented in writing to all parties. However, these records are solely for the benefit of presentation to the arbitrator, whose decision may not necessarily be based on these records and in any event is final. Both parties should be aware that the City will not confirm or deny the accuracy of any records maintained by either party for Utility work

performed pursuant to a Utility Agreement. While the arbitration is pending, the Company shall pay the Contractor on a monthly basis, based on the price offered by the Company to the Contractor for the performance of the work.

9. Arbitration of utility work:

The arbitration of the issues described above shall be conducted pursuant to the Construction Industry Arbitration Rules of the American Arbitration Association (hereinafter "the Rules" and "AAA") in effect on the date the arbitration is initiated except as set forth herein. The arbitration award shall be final and binding upon the parties to the arbitration and judgment upon the award may be entered in a court having jurisdiction.

(a) Once an arbitrator(s) has been appointed by the AAA, the arbitration shall be scheduled as promptly as possible given the arbitrator(s) and the parties' schedules.

(b) No later than seven days prior to the first arbitration hearing, Company and Contractor shall submit to the arbitrator(s), and to each other, a summary of each party's respective position and such other information as is deemed appropriate, along with a copy of each party's Final Offer as specified in paragraph 8.

(c) The arbitration shall be conducted and concluded in two days.

(d) On the morning of the first day of the arbitration, Contractor and/or representatives shall have 3 ½ hrs to make a presentation of its claim to the arbitrator. During its presentation, Contractor shall not be permitted to produce any documents or cost records which have not already been provided to the Company. Contractor shall be permitted to produce any analysis or description of its claim which has been prepared for the purpose of its presentation.

(e) After lunch, Company and/or its representatives shall have two hours to ask Contractor questions about its claim and its presentation. Thereafter the arbitrator(s) shall have two hours to ask Contractor questions about its claim and its presentation.

(f) On the morning of the second day of the arbitration, Company and/or its representatives shall have 3 ½ hours to make a presentation of its claim to the arbitrator. During its presentation, the Company shall not be permitted to produce any documents or cost records which have not already been provided to the Contractor. The Company shall be permitted to produce any analysis or description of its claim which has been prepared for the purpose of its presentation.

(g) After lunch, Contractor and/or its representatives shall have two hours to ask Company questions about its claim and its presentation. Thereafter the arbitrator(s) shall have two hours to ask Company questions about its claim and its presentation.

(h) Subject to the above time limitations, the arbitrator(s) may conduct the arbitration in such manner as the arbitrator(s) deems reasonable.

(i) The arbitrator(s) shall then have one week to select in writing, as the arbitrator ('s) award, that party's Final Offer which appears to be more reasonable, based on the presentations at the arbitration hearings.

(j) The arbitrator shall have no discretion to grant an award other than one of the two Final Offers submitted by the parties.

(k) Any award for work that has already been performed shall be paid on the 7th day after receipt of the arbitrator's decision, or on the 30th day after completion of the work, whichever is later. Payment for work not yet completed at the time of the arbitrator's decision shall be paid within 30 days of completion of work. Interest shall accrue from the date payment is due at the rate of 9% per annum. Either party may cause judgment to be entered in accordance with the arbitrator(s) decision in a court in the State of New York, County of New York.

(l) The arbitrator's fees and any other costs of the arbitration shall be initially shared equally by Company and Contractor. The non-prevailing party shall then pay all arbitrator's fees and costs of the arbitration and shall reimburse the prevailing party for its share of such fees and costs theretofore paid.

(m) The parties may, at any time, settle any matter submitted to arbitration.

10. Order-out waiver:

The Contractor and all subcontractors hired by it, if an Interference Agreement is executed as specified between the concerned parties, agree to waive any rights they may have, if any, under law, contract or otherwise to compel the City to assert any right the City may have, including the issuance of any directives required under the New York City Administrative Code, Section 19-143 and Section 24-521, to require any or all of the Companies to maintain, repair, replace, protect, support, shift, alter, relocate, and/or remove utility facilities in connection with the work to be performed under this contract. However, nothing in this section shall preclude the City from exercising its rights under the Law to issue such a directive to the Company.

11. Cost of insurance:

Each of the named Companies, at their option and if an Interference Agreement is executed as specified between the concerned parties, may be named as an additional insured on all insurance policies required to be maintained under this contract. In the event that a Company opts to be so named as an additional insured, the actual incremental cost, if any, to the Contractor of providing such insurance coverage shall be borne by that Company. The Contractor shall provide a written statement from its insurance provider documenting the actual cost of this added coverage to the Company. Under no circumstances shall the cost of insurance coverage on behalf of any Company be borne by the City. Nothing in this paragraph shall be interpreted to imply the City's acceptance of any additional responsibility or liability for any matter related to the performance of Utility Work. In particular, the Company and the Contractor bear joint and full responsibility to ensure that any Utility Work performed by the Contractor is in compliance with all applicable government and Company regulations.

12. Cost of utility interference work:

The Companies, by virtue of a prior agreement with the City, have agreed to perform their obligations described in this section. It is expressly understood that the cost of Utility Work or any delays cost cause by such utility work shall not be a charge against the City, but shall be a matter for adjustment between the Contractor and the Company or Companies concerned. The City and the Contractor agree that the Companies are third party beneficiaries of this section of the contract, if a Utility Agreement is executed between the contractor and utility company (ies). The provisions of this section shall govern in all cases where Company property interferes with or is about to be disturbed by the City work, notwithstanding any other provision of the Contract, except for Natural Gas transmission/distribution facilities covered subject to the Gas Facility Cost Allocation Act (GFCAA) and covered separately in this contract.

13. Default declaration:

The Contractor agrees that the provisions of this section are material provisions of the contract, and that the Contractor's failure to comply with the procedures set forth above are sufficient for the Commissioner to declare the Contractor in default pursuant to Article 48 of the Contract.

14. NYS Labor Law:

The Contractor is hereby advised that New York State Labor Law applies to public work. The work described in this Section U of the contract performed by utility company (ies) with their own forces or vendors hired by such company (ies) is not public work.

15. Facility operators:

The insurance requirements in Paragraph 11 of this Section U apply to: (i) additional Companies, if any, who were not named in Schedule "A" but which have executed a Utility Agreement with the contractor for utility work; and (ii) additional coverage, if any, paid for by Utility Companies whose utility facilities are located within the project limits, that they may require for the utility work pursuant to an utility agreement between the contractor and such utility companies.

[End]

"STANDARD UTILITY LETTER OF AGREEMENT"

(Name)
Deputy Commissioner, Infrastructure Division
Department of Design and Construction
30-30 Thomson Avenue
Long Island City, NY 11101

RE: City Work Performed in the Presence of Private Utility Facilities
Project No: _____

Dear (Name):

This letter is to certify that _____, has requested the inclusion of the attached "Section U: Additional contract requirements applying to work performed in the presence of privately owned utility." The company agrees to abide by the terms of this Section U at the company's own expenses due to their facilities interferences with the Public work.

Sincerely,

_____
By: Authorized Company Representative

_____
Title

NOTARY PUBLIC

CERTIFIED AS TO FORM
AND LEGAL AUTHORITY:

By:_____

SCHEDULE U-1

HWMM008

INSTALLATION OF WATER MAINS, STREET LIGHTING
AND TRAFFIC SIGNAL WORK
EAST 86TH STREET BETWEEN PARK AVENUE AND SECOND AVENUE

SCHEDULE U-1 **LISTING OF COMPANIES NAMED FOR THIS CONTRACT**

COMPANY NAME	CONTACT NAME	CONTACT TELEPHONE
CON EDISON	THERESA KONG	212-460-4834
ECS	AUBREY MAKHANLALL	718-977-8165
TIME WARNER	JOHN PIAZZA	718-888-4261
RCN	JOEY MAISONET	718-577-3279

SECTION U-3

(NO TEXT IN THIS SECTION)

END OF ADDENDUM No.5
This Addendum consists of Sixteen (16) pages

Department of Design and Construction

INFRASTRUCTURE DIVISION
BUREAU OF DESIGN

VOLUME 3 OF 3

PROJECT ID: HWMM008

SAFETY AND STREETSCAPE IMPROVEMENTS
EAST 86TH STREET BETWEEN PARK AVENUE AND SECOND AVENUE

SCHOOL SAFETY NECKDOWNS
MADISON AVENUE BETWEEN EAST 84TH STREET AND EAST 85TH STREET

INCLUDING WATER MAIN, STREET LIGHTING, AND TRAFFIC SIGNAL WORK

Together With All Work Incidental Thereto

BOROUGH OF MANHATTAN
CITY OF NEW YORK

_____

Contractor.

_____

Dated_____, **20**____

_____