Department of Design and Construction

THE CITY OF NEW YORK
DEPARTMENT OF DESIGN AND CONSTRUCTION
DIVISION OF INFRASTRUCTURE

30-30 THOMSON AVENUE
LONG ISLAND CITY, NEW YORK 11101-3045
TELEPHONE (718) 391-1000
WEBSITE www1.nyc.gov/site/ddc/index.page

VOLUME 1 OF 3

BID BOOKLET

LAW

FOR FURNISHING ALL LABOR AND MATERIALS NECESSARY AND REQUIRED FOR:

PROJECT ID: BED798

REPLACEMENT OF TRUNK AND DISTRIBUTION WATER MAINS, COMBINED SEWER AND APPURTENANCES IN FLATBUSH AVENUE BETWEEN STERLING PLACE AND 8TH AVENUE, ETC.

INCLUDING SEWER, WATER MAIN, 8TH AVENUE TRIANGLE STREETSCAPE, NECKDOWNS, STREET LIGHTING, AND TRAFFIC SIGNAL WORK

Together with All Work Incidental Thereto
BOROUGH OF BROOKLYN
CITY OF NEW YORK

FOR THE DEPARTMENT OF ENVIRONMENTAL PROTECTION
PREPARED BY
IN-HOUSE DESIGN

DECEMBER 28, 2016

17-079

*Revised on 07/11/2017

Bid Tab – REVISED*

Description	**REPLACEMENT OF TRUNK AND DISTRIBUTION WATER MAINS, SEWERS AND APPURTENANCES IN FLATBUSH AVE BET STERLING PLACE & 8TH AVENUE, ETC. - BOROUGH OF BROOKLYN**		
Bid Date	**03/07/2017**	**FMS ID**	**BED798**
Estimated Cost	**$38,603,889.00**	**Client Agency**	**DEP**
Bid Security	**Not less than 2% of Total Bid Price**	**PLA**	**NO**
Time Allowed	**1275 CCD**	**Federal Funded:**	**NO**
Addendum	**1**	**Contract Manager**	**Shermaine Manifold**
PIN	**8502017WM0008C**	**Project Manager**	**Patel, Ashishkumar**
Selective Bidding	☐Yes ☒No	**E-PIN**	**85017B0076**

Bid Rank	Vendor	Bid Amount	Security Type
1	TRIUMPH CONSTRUCTION CORP.	$37,432,647.57*	Bond
2	PERFETTO CONTRACTING CO. INC.	$41,923,967.72	Bond
3	JLJ IV ENTERPRISES INC.	$42,906,490.53	Bond
4	HALCYON CONSTRUCTION CORP.	$44,730,000.00	Bond
5	TULLY CONSTRUCTION CO. INC.	$45,493,938.28	Bond
6	E.E. CRUZ & COMPANY, INC.	$45,675,131.28	Bond
7	LAWS CONSTRUCTION CORP.	$46,659,000.00	Bond
8	JR CRUZ CORP	$47,237,287.79	Bond
9	RESTANI CONSTRUCTION CORP.	$47,784,500.00	Bond

Recorder: Brenda Barreiro Ext. 1041 **Approver:** Lorraine Holley

Department of Design and Construction

Dr. Feniosky Peña-Mora
Commissioner

Charlette Hamamgian, Esq.
Agency Chief
Contracting Officer

Lorraine Holley
Deputy ACCO
Competitive Sealed
Bid Contracts

May 31, 2017

CERTIFIED MAIL - RETURN RECEIPT REQUEST
TRIUMPH CONSTRUCTION CORP.
1354 SENECA AVENUE
BRONX, NY 10474

RE: FMS ID: BED798
E-PIN: 85017B0076001
DDC PIN: 8502017WM0008C
REPLACEMENT OF TRUNK AND DISTRIBUTION WATER MAINS,SEWERS AND APPURTENANCES IN FLATBUSH AVE BET STERLING PLACE & 8TH AVENUE, ETC-BOROUGH OF BROOKLYN
NOTICE OF AWARD

Dear Contractor:

You are hereby awarded the above referenced contract based upon your bid in the amount of $37,432,647.57 submitted at the bid opening on March 07, 2017. Within ten (10) days of your receipt of this notice of award, you are required to take the actions set forth in Paragraphs (1) through (3) below. For your convenience, attached please find a copy of Schedule A of the General Conditions to the Contract, which sets forth the types and amounts of insurance coverage required for this contract.

(1) Execute two copies of the Agreement in the Contracts Unit, 30-30 Thomson Avenue, 1st Floor, Long Island City, New York (IDCNY Building). A Commissioner of Deeds will be available to witness and notarize your signature. The Agreement must be signed by an officer of the corporation or a partner of the firm.

(2) Submit to the Contracts Unit two properly executed performance and payment bonds. If required for this contract, copies of performance and payment bonds are attached.

(3) Submit to the Contracts Unit the following insurance documentation: (a) original certificate of insurance for general liability in the amount required by Schedule A, and (b) original certificates of insurance or other proof of coverage for workers' compensation and disability benefits, as required by New York State Law. The insurance documentation specified in this paragraph is required for registration of the contract with the Comptroller's Office.

Department of Design and Construction

On or before the contract commencement date, you are required to submit all other certificates of insurance and/or policies in the types and amounts required by Schedule A. Such certificates of Insurance and/or policies must be submitted to the Agency Chief Contracting Office, Attention: Risk Manager, Fourth Floor at the above indicated department address.

Your attention is directed to the section of the Information for Bidders entitled "Failure to Execute Contract". As indicated in this section, in the event you fail to execute the contract and furnish the required bonds within the (10) days of your receipt of this notice of award, your bid security will be retained by the City and you will be liable for the difference between your bid price and the price for which the contract is subsequently awarded, less the amount of the bid security retained.

Sincerely,

Michael Shipman
Director of Contracts

30 - 30 Thomson Ave L.I.C., NY 11101 Telephone: (718) 391-2838 Facsimile: (718) 391-1885 www.nyc.gov/buildnyc

Notices to Bidders

Pre-Bid Questions (PBQs)

Please be advised that PBQs should be submitted to the Agency Contact Person at least five (5) business days (by 5:00 PM EST) prior to the bid opening date as indicated in ATTACHMENT 1 - BID INFORMATION, page A-1 and SCHEDULE B, page 13, VOLUME 1 OF 3 of this BID BOOKLET.

Apprenticeship Program

If Apprenticeship Program is required as noted on Page 19 of this BID BOOKLET, the following notice applies:

Please be advised that, pursuant to the authority granted to the City under Labor Law §816-b, the New York City Department of Design and Construction hereby requires that the contractor awarded a contract as a result of this solicitation, and any of its subcontractors with subcontracts worth two million dollars or over, have, prior to entering into such contract or subcontract, apprenticeship agreements appropriate for the type and scope of work to be performed that have been registered with, and approved by, the New York State Commissioner of Labor. In addition, the contractor and its subcontractors will be required to show that such apprenticeship program/s have successfully passed the two year Probation period following the initial registration date of such program/s with the New York State Department of Labor.

The failure to prove, upon request, that these requirements have been met shall result in the contract not being awarded to the contractor or the subcontractor not being approved.

Please be further advised that, pursuant to Labor Law §220, the allowable ratio of apprentices to journeypersons in any craft classification shall not be greater than the ratio permitted to the contractor as to its workforce on any job under the registered apprenticeship program.

Notices to Bidders

Compliance with HireNYC and Reporting Requirements

The Hiring and Employment Rider shall apply to contracts valued at $1 million or more for all goods, services and construction except human services contracts that are subject to the Public Assistance Hiring Commitment Rider. The Rider describes the Hire NYC process and obligations, including reporting requirements throughout the life of the contract. The Hire NYC process requires contractors to enroll with the Hire NYC system within thirty days after the registration of the contract subject to this solicitation, to provide information regarding all entry to mid-level job opportunities arising from this contract and located in New York City, and to agree to interview qualified candidates from HireNYC for those opportunities. The Rider also includes reporting requirements unrelated to HireNYC.

NYC Construction Loan Pilot Program

The New York City Department of Small Business Services (SBS), in conjunction with the New York Business Development Corporation (NYBDC), have established **a NYC Construction Loan** pilot program to provide prime contractors and subcontractors financing for mobilization costs on certain City construction projects.

Under this initiative, loans are available for early stage mobilization needs such as insurance, labor, supplies and equipment. Bidders are strongly encouraged to visit "Growing Your Business" at www.nyc.gov/nycbusiness to learn more about the loan or contact constructionloan@sbs.nyc.gov / (212) 513-6444 to obtain details and to determine preliminary eligibility.

A successful loan applicant will be required to make an assignment of its contract (or subcontract) payments to the lender NYBDC until the loan is repaid. If the loan is to a subcontractor, a prime contractor must honor the terms of such an assignment.

A prime contractor may not discriminate against a subcontractor or potential subcontractor by reason of the subcontractor's participation, or nonparticipation, in the NYC Construction loan program.

CITY OF NEW YORK

DEPARTMENT OF DESIGN AND CONSTRUCTION DIVISION OF INFRASTRUCTURE

BID BOOKLET

FOR FURNISHING ALL LABOR AND MATERIALS NECESSARY AND REQUIRED FOR:

PROJECT ID: BED798

REPLACEMENT OF TRUNK AND DISTRIBUTION WATER MAINS, COMBINED SEWER AND APPURTENANCES IN FLATBUSH AVENUE BETWEEN STERLING PLACE AND 8TH AVENUE, ETC.

INCLUDING SEWER, WATER MAIN, 8TH AVENUE TRIANGLE STREETSCAPE, NECKDOWNS, STREET LIGHTING, AND TRAFFIC SIGNAL WORK

Together With All Work Incidental Thereto
BOROUGH OF BROOKLYN

(NO TEXT ON THIS PAGE)

PROJECT ID: BED798

CITY OF NEW YORK
DEPARTMENT OF DESIGN AND CONSTRUCTION
DIVISION OF INFRASTRUCTURE

BID BOOKLET

TABLE OF CONTENTS

SECTION		PAGE
PART A		
1.	Table of Contents	1
2.	Special Notice to Bidders	2
3.	Attachment 1 – Bid Information	A-1
4.	Bid Schedule	B-1
5.	Bid Form	C-1
6.	Affirmation	C-6
7.	Bid Bond	C-7
8.	M/WBE Program: M/WBE Utilization Plan	5
9.	Apprenticeship Program Requirements	19
PART B		
10.	Safety Questionnaire	22
11.	Pre-award Process	25
12.	Project Reference Form	27
13.	Contract Certificate	30
14.	Vendex Compliance	31
15.	Iran Divestment Act Compliance Rider	32
16.	Construction Employment Report	34

(NO TEXT ON THIS PAGE)

CITY OF NEW YORK
DEPARTMENT OF DESIGN AND CONSTRUCTION
DIVISION OF INFRASTRUCTURE

SPECIAL NOTICE TO BIDDERS

BID SUBMISSION REQUIREMENTS

THE FOLLOWING DOCUMENTS ARE TO BE COMPLETED AND SUBMITTED WITH THE BID:

1. Bid Schedule and Bid Form, including Affirmation
2. Bid Security (if required, see Attachment 1 on Page A-1)
3. Schedule B: M/WBE Utilization Plan (if participation goals have been established)

FAILURE TO SUBMIT ITEMS (1), (2) AND (3)
WILL RESULT IN THE DISQUALIFICATION OF THE BID.

4. Safety Questionnaire
5. Construction Employment Report (if bid is $1,000,000 or more)
6. Contract Certificate (if bid is less than $1,000,000)
7. Confirmation of Vendex Compliance
8. Bidder's Certification of Compliance with Iran Divestment Act
9. Special Experience Requirements (if applicable)
10. Apprenticeship Program Questionnaire (if applicable)
11. Any addenda issued prior to the receipt of bids

FAILURE TO SUBMIT ITEMS (4) THROUGH (11)
MAY RESULT IN THE DISQUALIFICATION OF THE BID.

NOTES:

(1) All of the above referred to blank forms to be completed and submitted with the bid are included in the BID BOOKLET.

(2) If the bidder has any questions or requires additional information, please contact the Department of Design and Construction by phone (718-391- 2601) or by fax (718-391-2615).

(3) VENDEX QUESTIONNAIRES: The Bidder is advised that Vendex Questionnaires and procedures have been changed. Vendex Questionnaires, as well as detailed instructions, may be obtained at www.nyc.gov/vendex. The bidder may also obtain Vendex forms and instructions by contacting the Agency Chief Contracting Officer or the contact person for this contract.

(4) SPECIAL EXPERIENCE REQUIREMENTS: The Bidder is advised that Special Experience Requirements may apply to this contract. Such requirements are set forth on pages 3, 3a, 3b and 4 of this Bid Booklet.

SPECIAL NOTICE TO BIDDERS

SPECIAL EXPERIENCE REQUIREMENTS (Revised 03/2014)

(A) **SPECIAL EXPERIENCE REQUIREMENTS FOR THE BIDDER:** The Special Experience Requirements set forth below apply to the bidder. Compliance with such Special Experience Requirements will be determined solely by the City prior to an award of contract. Failure to comply with the Special Experience Requirements will result in rejection of the bid as non-responsive.

The requirements in this Section (A) apply to this contract where indicated by a blackened box (■).

■ The bidder must, within the last seven (7) consecutive years prior to the bid opening, have successfully completed in a timely fashion at least one (1) project similar in scope and type to the required work. Such prior project may have been performed as a prime contractor, subcontractor or sub-subcontractor.

The Special Experience Requirements next to the blackened box below apply to the bidder. If the bidder intends to perform such work itself, it must demonstrate compliance with the Special Experience Requirements. If the bidder intends to subcontract this work, the proposed subcontractor or sub-subcontractor must demonstrate compliance with the Special Experience Requirements. The contractor, subcontractor or sub-subcontractor (hereinafter referred to as the "entity") that will perform any specific area of work indicated by the blackened box below, may have performed the required prior project(s) as a prime contractor, subcontractor or sub-subcontractor. Once approved, no substitution will be permitted, unless the qualifications of the proposed replacement have been approved in writing in advance by the City.

■ **Trunk Water Main Work:** The entity that will perform the trunk water main work must, within the last seven (7) consecutive years prior to the bid opening, have successfully completed in a timely fashion at least one (1) project similar in scope and type to the required work.

☐ **Best Management Practice Work:** Best Management Practice ("BMP") Work is any item of work in the Bid Schedule that begins with the prefix "BMP". The entity that will perform any BMP Work must, within the last five (5) consecutive years prior to the bid opening, have successfully completed in a timely fashion at least three (3) projects similar in scope and type to the required work.

For professional services in connection with BMP Work, (i.e., monitoring and reporting services), the individual who will perform the required services must, within the last five (5) consecutive years prior to the bid opening, have successfully completed in a timely fashion at least three (3) projects similar in scope and type to the required work. Additional requirements are set forth below.

☐ The individual serving as the Restoration Specialist (Construction Monitor) must be a Registered Landscape Architect licensed by the state of New York, or must have equivalent professional experience.

☐ The individual serving as the Erosion and Sediment Control Licensed/Certified Professional must be a Certified Professional in Erosion and Sediment Control (CPESC), certified by CPESC, Inc.

☐ **Micro-Tunneling/Pipe Jacking Work:** The entity that will perform the micro-tunneling/pipe jacking work must, within the last five (5) consecutive years prior to the bid opening, have successfully completed in a timely fashion at least two (2) projects similar in scope and type to the required work.

☐ **OTHER:** _____

_____

(B) SPECIAL EXPERIENCE REQUIREMENTS FOR SPECIFIC AREAS OF WORK (to be provided after an award of contract):

The requirements in this Section (B) apply to this contract where indicated by a blackened box (■).

The Special Experience Requirements set forth below apply to the contractor, subcontractor or sub-subcontractor that will perform the specific area of work. **Compliance with such Special Experience Requirements will be determined solely by the City after an award of contract.** After an award of contract, when requested by the City, the contractor will be required to submit the qualifications of the contractor, subcontractor or sub-subcontractor that will perform the specific area of work. If the bidder intends to perform such work itself, it must demonstrate compliance with the Special Experience Requirements. If the bidder intends to subcontract this work, the proposed subcontractor or sub-subcontractor must demonstrate compliance with the Special Experience Requirements. Once approved, no substitution will be permitted, unless the qualifications of the proposed replacement have been approved in writing in advance by the City.

Special Experience Requirements apply to the contractor, subcontractor or sub-subcontractor (hereinafter referred to as the "entity") that will perform any specific area of work indicated by a blackened box. The entity may have performed the required prior project(s) as a prime contractor, subcontractor or sub-subcontractor.

■ **Hazmat Work:** Hazmat Work is any item of work in the Bid Schedule that begins with the prefix 8.01. The entity that will perform any Hazmat Work must, within the last three (3) consecutive years prior to the bid opening, have successfully completed in a timely fashion at least five (5) projects similar in scope and type to the required work.

☐ **Pile, CFA Pile, and/or Mini-Pile Work:** The entity that will perform the Pile, CFA Pile and/or Mini-Pile Work must, within the last three (3) consecutive years prior to the bid opening, have successfully completed in a timely fashion at least two (2) projects similar in scope and type to the required work.

For professional services in connection with Pile Work, (i.e., engineering and inspection services), the individual who will perform the required services must be a Professional Engineer licensed by the state of New York. Such individual must also comply with the above requirements for prior projects.

☐ **Construction Report, Monitoring And Post-Construction Report, and Continuous Real-Time Monitoring For Vibrations And Movements And Post-Construction Report Work:** The entity that will perform the Construction Report, Monitoring For Vibrations And Movements, and Post-Construction Report Work must, within the last three (3) consecutive years prior to the bid opening, have successfully completed in a timely fashion at least two (2) projects similar in scope and type to the required work.

For professional services in connection with Reporting and Monitoring Work, (i.e., engineering and inspection services), the individual who will perform the required services must be a Professional Engineer licensed by the state of New York. Such individual must also comply with the above requirements for prior projects.

■ **OTHER: Asbestos Abatement Work:** Refer to SPECIFICATIONS FOR ABATEMENT OF TRANSIT AUTHORITY DUCT INSULATION ASBESTOS CONTAINING MATERIALS as provided in Volume 3 of 3.

(C) **SPECIFICATIONS:** In the event of any conflict, omission or inconsistency between (1) the Specifications and/or Contract Drawings, and (2) the Special Experience Requirements in Section (B) of the Special Notice To Bidders, the special experience listed in the Specifications and/or Contract Drawings shall be controlling. The Special Experience Requirements in Section (B) of this Special Notice To Bidders are only for the convenience of the bidders.

(D) **SUBMISSION REQUIREMENTS:** For each project submitted to demonstrate compliance with the Special Experience Requirements, the bidder must complete and submit the Qualification Form included in the Bid Booklet. The City will only evaluate a project if the following criteria are met: (1) the project is described on the Qualification Form, and (2) all information on the Qualification Form is provided. The City will not evaluate any project which does not comply with the criteria set forth herein, including any project which is referred to only on the resume of an individual.

If Special Experience Requirements are indicated for any specific area of work, the submission requirement set forth above shall apply to the entity that will perform the specific area of work.

(E) **CONDITIONS**: In determining compliance with the Special Experience Requirements for the bidder set forth above, the City may consider prior projects completed by principal(s) or other employees of the bidder while affiliated with another entity, subject to the conditions set forth below.

- Any principal or other employee on whose prior experience the bidder is relying to demonstrate compliance with this special experience requirement must have held the following: (a) a significant management role in the prior entity with which he/she was affiliated, and (b) a significant management role in the entity submitting the bid for a period of six (6) months or more from the inception of the bidding entity.

- The bidder may not rely on the experience of its principals or other employees to demonstrate compliance with any other requirements, including without limitation, financial requirements or requirements for a specified minimum amount of annual gross revenues.

(F) **JOINT VENTURES**: In the event the bidder is a joint venture, at least one firm in the joint venture must meet the above described experience requirements.

Qualification Form

List previous projects completed to meet the special experience requirements for this contract. Please photocopy this form for submission of all required projects.

Name of Contractor: Triumph Const. Corp

Name of Project: Queens Plaza Improvements

Location of Project: Queen Plaza

Owner or Owner's representative (Architect or Engineer) who is familiar with the work performed:

Name: Dan Colangelo
Title: PM Phone Number: 212-312-3765

Brief description of the Project completed or the Project in progress: Water main Sewer Concrete, Sidewalk, Asphalt, Mill + pave, pave, Landscape, Lighting

Was the Project performed as a prime, a subcontractor or a sub-subcontractor: Prime

Amount of Contract, Subcontract or Sub-subcontract: $38,330,225.89

Start Date and Completion Date: 2009-2012

****

Name of Contractor: Triumph Const. Corp

Name of Project: Low Pressure water main

Location of Project: Brooklyn Navy Yard

Owner or Owner's representative (Architect or Engineer) who is familiar with the work performed:

Name: Carmine Stabile
Title: President Phone Number: 845-623-0497

Brief description of the Project completed or the Project in progress: Water Main, Sewer, Concrete, Sidewalk, Asphalt, Mill + pave, Landscape

Was the Project performed as a prime, a subcontractor or a sub-subcontractor: Prime

Amount of Contract, Subcontract or Sub-subcontract: $12,937,036.73

Start Date and Completion Date: 2010-2012

BID SCHEDULE

NOTE: (1) The Agency may reject a bid if it contains unbalanced bid prices. An unbalanced bid is considered to be one containing lump sum or unit items which do not reflect reasonable actual costs plus a reasonable proportionate share of the Bidder's anticipated profit, overhead costs, and other indirect costs, anticipated for the performance of the items in question.

(2) The following bid prices on Unit Price Contracts are to be paid for the actual quantities of the item numbers in the completed work or structure, and they cover the cost of all work, labor, material, tools, plant and appliances of every description necessary to complete the entire work, as specified, and the removal of all debris, temporary work and appliances.

(3) PLEASE BE SURE A LEGIBLE BID IS ENTERED, IN INK, FOR EACH ITEM.
Alterations must be initialed in ink by the bidder.

(4) The Extended Amount entered in Column 6 shall be the product of the Estimated Quantity in Column 3 times the Unit Price Bid in Column 5.

(5) Prospective bidders must examine the Bid Schedule carefully and, before bidding, must advise the Commissioner, in writing, if any pages are missing, and must request that such missing pages be furnished them. The pages of this Bid Schedule are numbered consecutively, as follows:
B - 3 Through B - 55

PLEASE BE SURE A LEGIBLE BID IS ENTERED FOR EACH ITEM.
THE BIDDER SHALL INSERT THE TOTAL BID PRICE IN
THE BID FORM ON PAGE C-4 OF THIS BID BOOKLET.

Department of Design and Construction

NEW YORK CITY DEPARTMENT OF DESIGN AND CONSTRUCTION
DIVISION OF INFRASTRUCTURE - BUREAU OF DESIGN

PROJECT ID: BED798
CONTRACT PIN: 8502017WM0008C

12/29/2016 2:29 PM

BID SCHEDULE FORM

COL 1 SEQ NO	COL 2 ITEM NUMBER AND DESCRIPTION	COL 3 ENGINEER'S ESTIMATE QUANTITY	COL 4 UNIT	COL 5 UNIT PRICE (IN FIGURES) DOLLARS	CTS	COL 6 EXTENDED AMOUNT (IN FIGURES) DOLLARS	CTS
001	4.02 AB-R ASPHALTIC CONCRETE WEARING COURSE, 1-1/2" THICK	2,150.00	S.Y.	25	00	53,750	00
002	4.02 AF-R ASPHALTIC CONCRETE WEARING COURSE, 2" THICK	25,017.00	S.Y.	35	00	875,595	00
003	4.02 CA BINDER MIXTURE	7,798.00	TONS	120	00	935,760	00
004	4.04 H CONCRETE BASE FOR PAVEMENT, VARIABLE THICKNESS FOR TRENCH RESTORATION, (HIGH-EARLY STRENGTH)	1,031.00	C.Y.	135	00	139,185	00
005	4.05 AX HIGH-EARLY STRENGTH REINFORCED CONCRETE PAVEMENT (BUS STOPS)	95.00	C.Y.	350	00	33,250	00
006	4.07 AB RESET BLUESTONE CURB	120.00	L.F.	100	00	12,000	00

Department of Design and Construction

NEW YORK CITY DEPARTMENT OF DESIGN AND CONSTRUCTION
DIVISION OF INFRASTRUCTURE - BUREAU OF DESIGN

PROJECT ID: BED798
CONTRACT PIN: 8502017WM0008C

12/29/2016 2:29 PM

BID SCHEDULE FORM

COL 1 SEQ. NO.	COL 2 ITEM NUMBER and DESCRIPTION	COL 3 ENGINEER'S ESTIMATE OF QUANTITY	COL 4 UNIT	COL 5 UNIT PRICE (IN FIGURES) DOLLARS	CTS	COL 6 EXTENDED AMOUNT (IN FIGURES) DOLLARS	CTS
007	4.07 NYHA NEW NY HISTORICAL GRANITE CURB, STRAIGHT	936.00	L.F.	150	00	140,400	00
008	4.07 NYHC NEW NY HISTORICAL GRANITE CURB, CORNER	582.00	L.F.	200	00	116,400	00
009	4.08 BA CONCRETE CURB (21" DEEP)	195.00	L.F.	1	00	195	00
010	4.09 AD STRAIGHT STEEL FACED CONCRETE CURB (18" DEEP)	334.00	L.F.	5	00	1,670	00
011	4.09 AE STRAIGHT STEEL FACED CONCRETE CURB (21" DEEP)	405.00	L.F.	5	00	2,025	00
012	4.09 CD CORNER STEEL FACED CONCRETE CURB (18" DEEP)	310.00	L.F.	5	00	1,550	00

Department of Design and Construction

NEW YORK CITY DEPARTMENT OF DESIGN AND CONSTRUCTION
DIVISION OF INFRASTRUCTURE - BUREAU OF DESIGN

PROJECT ID: BED798
CONTRACT PIN: 8502017WM0008C

12/29/2016 2:29 PM

BID SCHEDULE FORM

COL 1 SEC. No.	COL 2 ITEM NUMBER and DESCRIPTION	COL 3 ENGINEER'S ESTIMATE OF QUANTITY	COL 4 UNIT	COL 5 UNIT PRICE (IN FIGURES) DOLLARS	CTS	COL 6 EXTENDED AMOUNT (IN FIGURES) DOLLARS	CTS
013	4.11 CA FILL, PLACE MEASUREMENT	11.00	C.Y.	1	00	11	00
014	4.13 AAS 4" CONCRETE SIDEWALK (UNPIGMENTED)	12,609.00	S.F.	2	00	25,218	00
015	4.13 AAT 4" CONCRETE SIDEWALK ON EXISTING FOUNDATION (UNPIGMENTED)	165.00	S.F.	0	10	16	50
016	4.13 ABS 4" CONCRETE SIDEWALK (PIGMENTED)	4,878.00	S.F.	8	00	39,024	00
017	4.13 BAS 7" CONCRETE SIDEWALK (UNPIGMENTED)	2,231.00	S.F.	3	00	6,693	00
018	4.13 BBS 7" CONCRETE SIDEWALK (PIGMENTED)	1,074.00	S.F.	10	00	10,740	00

Department of Design and Construction

NEW YORK CITY DEPARTMENT OF DESIGN AND CONSTRUCTION
DIVISION OF INFRASTRUCTURE - BUREAU OF DESIGN

PROJECT ID: BED798
CONTRACT PIN: 8502017WM0008C

12/29/2016 2:29 PM

BID SCHEDULE FORM

COL 1 SEQ. NO.	COL 2 ITEM NUMBER and DESCRIPTION	COL 3 ENGINEER'S ESTIMATE OF QUANTITY	COL 4 UNIT	COL 5 UNIT PRICE (IN FIGURES) DOLLARS	CTS	COL 6 EXTENDED AMOUNT (IN FIGURES) DOLLARS	CTS
019	4.13 DE EMBEDDED PREFORMED DETECTABLE WARNING UNITS	428.00	S.F.	1	00	428	00
020	4.14 W WELDED STEEL WIRE FABRIC	50.00	LBS.	10	00	500	00
021	4.15 TOPSOIL	90.00	C.Y.	65	00	5,850	00
022	4.15 SS STRUCTURAL SOIL FOUNDATION MATERIAL	100.00	C.Y.	120	00	12,000	00
023	4.17 AC SHRUBS PLANTED, 18" TO 24" HIGH, ALL TYPES	120.00	EACH	150	00	18,000	00
024	4.17 D3G SHRUBS PLANTED, DECIDUOUS, 3 GALLON, ALL TYPES	11.00	EACH	100	00	1,100	00

Department of Design and Construction

NEW YORK CITY DEPARTMENT OF DESIGN AND CONSTRUCTION
DIVISION OF INFRASTRUCTURE - BUREAU OF DESIGN

PROJECT ID: BED798
CONTRACT PIN: 8502017WM0008C

12/29/2016 2:29 PM

BID SCHEDULE FORM

COL 1 SEQ. NO	COL 2 ITEM NUMBER and DESCRIPTION	COL 3 ENGINEER'S ESTIMATE OF QUANTITY	COL 4 UNIT	COL 5 UNIT PRICE (IN FIGURES) DOLLARS	CTS	COL 6 EXTENDED AMOUNT (IN FIGURES) DOLLARS	CTS
025	4.18 A MAINTENANCE TREE PRUNING (UNDER 12" CAL.)	98.00	EACH	350	00	34,300	00
026	4.18 B MAINTENANCE TREE PRUNING (12" TO UNDER 18" CAL.)	138.00	EACH	350	00	48,300	00
027	4.18 C MAINTENANCE TREE PRUNING (18" TO UNDER 24" CAL.)	25.00	EACH	300	00	7,500	00
028	4.18 D MAINTENANCE TREE PRUNING (24" CAL. AND OVER)	48.00	EACH	300	00	14,400	00
029	4.21 TREE CONSULTANT	1,462.00	P/HR	90	00	131,580	00
030	50.11CS040050 4'-0"W X 5'-0"H SINGLE BARREL FLAT TOP REINFORCED CONCRETE COMBINED SEWER	525.00	L.F.	1,850	00	971,250	00

Department of Design and Construction

NEW YORK CITY DEPARTMENT OF DESIGN AND CONSTRUCTION
DIVISION OF INFRASTRUCTURE - BUREAU OF DESIGN

PROJECT ID: BED798
CONTRACT PIN: 8502017WM0008C

12/29/2016 2:29 PM

BID SCHEDULE FORM

COL 1 SEQ. No	COL 2 ITEM NUMBER and DESCRIPTION	COL 3 ENGINEER'S ESTIMATE OF QUANTITY	COL 4 UNIT	COL 5 UNIT PRICE (IN FIGURES) DOLLARS	CTS	COL 6 EXTENDED AMOUNT (IN FIGURES) DOLLARS	CTS
031	50.11CS046050 4'-6"W X 5'-0"H SINGLE BARREL FLAT TOP REINFORCED CONCRETE COMBINED SEWER	540.00	L.F.	1,850	00	999,000	00
032	50.21C3C024D 24" R.C.P. CLASS III COMBINED SEWER, ON CONCRETE CRADLE	1,015.00	L.F.	1,000	00	1,015,000	00
033	50.21C3C030D 30" R.C.P. CLASS III COMBINED SEWER, ON CONCRETE CRADLE	760.00	L.F.	1,000	00	760,000	00
034	50.21C4C054D 54" R.C.P. CLASS IV COMBINED SEWER, ON CONCRETE CRADLE	265.00	L.F.	1,400	00	371,000	00
035	50.21C4C060D 60" R.C.P. CLASS IV COMBINED SEWER, ON CONCRETE CRADLE	24.00	L.F.	1,400	00	33,600	00
036	50.31CC15 15" E.S.V.P. COMBINED SEWER, ON CONCRETE CRADLE	1,100.00	L.F.	1,000	00	1,100,000	00

Department of Design and Construction

NEW YORK CITY DEPARTMENT OF DESIGN AND CONSTRUCTION
DIVISION OF INFRASTRUCTURE - BUREAU OF DESIGN

PROJECT ID: BED798
CONTRACT PIN: 8502017WM0008C

12/29/2016 2:29 PM

BID SCHEDULE FORM

COL 1 SEQ. NO.	COL 2 ITEM NUMBER & DESCRIPTION	COL 3 ENGINEER'S ESTIMATE OF QUANTITY	COL 4 UNIT	COL 5 UNIT PRICE (IN FIGURES) DOLLARS	CTS	COL 6 EXTENDED AMOUNT (IN FIGURES) DOLLARS	CTS
037	50.31CC18 18" E.S.V.P. COMBINED SEWER, ON CONCRETE CRADLE	730.00	L.F.	1,000	00	730,000	00
038	50.41C6E16 16" D.I.P. CLASS 56 COMBINED SEWER, ENCASED IN CONCRETE	45.00	L.F.	1,400	00	63,000	00
039	50.41C6E20 20" D.I.P. CLASS 56 COMBINED SEWER, ENCASED IN CONCRETE	65.00	L.F.	1,400	00	91,000	00
040	50.41C6E24 24" D.I.P. CLASS 56 COMBINED SEWER, ENCASED IN CONCRETE	55.00	L.F.	1,400	00	77,000	00
041	51.11C001 CHAMBER NO. 1	1.00	EACH	200,000	00	200,000	00
042	51.11C002 CHAMBER NO. 2	1.00	EACH	240,000	00	240,000	00

Department of Design and Construction

NEW YORK CITY DEPARTMENT OF DESIGN AND CONSTRUCTION
DIVISION OF INFRASTRUCTURE - BUREAU OF DESIGN

PROJECT ID: BED798
CONTRACT PIN: 8502017WM0008C

12/29/2016 2:29 PM

BID SCHEDULE FORM

COL. 1 SEQ. NO.	COL. 2 ITEM NUMBER and DESCRIPTION	COL. 3 ENGINEER'S ESTIMATE OF QUANTITY	COL. 4 UNIT	COL. 5 UNIT PRICE (IN FIGURES) DOLLARS	CTS	COL. 6 EXTENDED AMOUNT (IN FIGURES) DOLLARS	CTS
043	51.11C003 CHAMBER NO. 3	1.00	EACH	165,000	00	165,000	00
044	51.11C004 CHAMBER NO. 4	1.00	EACH	165,000	00	165,000	00
045	51.11P004 STANDARD 4'-0" DIAMETER PRECAST MANHOLE	2.00	EACH	5,000	00	10,000	00
046	51.11P008 STANDARD 8'-0" DIAMETER PRECAST MANHOLE	2.00	EACH	6,000	00	12,000	00
047	51.21A000000C ACCESS MANHOLE	7.00	EACH	UN ~~8,000~~ 6,000	~~00~~ 00	42,000	00
048	51.21S0A1000V STANDARD MANHOLE TYPE A-1	28.00	EACH	8,000	00	224,000	00

Department of Design and Construction

NEW YORK CITY DEPARTMENT OF DESIGN AND CONSTRUCTION
DIVISION OF INFRASTRUCTURE - BUREAU OF DESIGN

PROJECT ID: BED798
CONTRACT PIN: 8502017WM0008C

12/29/2016 2:29 PM

BID SCHEDULE FORM

COL 1 SEQ. NO.	COL 2 ITEM NUMBER and DESCRIPTION	COL 3 ENGINEER'S ESTIMATE OF QUANTITY	COL 4 UNITS	COL 5 UNIT PRICE (IN FIGURES) DOLLARS	CTS.	COL 6 EXTENDED AMOUNT (IN FIGURES) DOLLARS	CTS.
049	51.21S0A2000V STANDARD MANHOLE TYPE A-2	2.00	EACH	9,500	00	19,000	00
050	51.21S0C2060R STANDARD MANHOLE TYPE C-2 ON 60" R.C.P. SEWER	1.00	EACH	12,000	00	12,000	00
051	51.23RF REPLACEMENT OF EXISTING MANHOLE FRAME AND COVER	2.00	EACH	500	00	1,000	00
052	51.41S001 STANDARD CATCH BASIN, TYPE 1	45.00	EACH	5,000	00	225,000	00
053	51.42S1SO INCREMENTAL COST OF STANDARD CATCH BASIN TYPE 3 WITH CURB PIECE IN LIEU OF STANDARD CATCH BASIN TYPE 1	8.00	EACH	5,000	00	40,000	00
054	52.11D12 12" DUCTILE IRON PIPE BASIN CONNECTION	805.00	L.F.	400	00	322,000	00

Department of Design and Construction

NEW YORK CITY DEPARTMENT OF DESIGN AND CONSTRUCTION
DIVISION OF INFRASTRUCTURE - BUREAU OF DESIGN

PROJECT ID: BED798
CONTRACT PIN: 8502017WM0008C

12/29/2016 2:29 PM

BID SCHEDULE FORM

COL 1 SEC. NO.	COL 2 ITEM NUMBER and DESCRIPTION	COL 3 ENGINEER'S ESTIMATE OF QUANTITY	COL 4 UNIT	COL 5 UNIT PRICE (IN FIGURES) DOLLARS	CTS	COL 6 EXTENDED AMOUNT (IN FIGURES) DOLLARS	CTS
055	**52.31V06C15** 6" E.S.V.P. SPUR FOR HOUSE CONNECTION ON 15" E.S.V.P. COMBINED SEWER	68.00	EACH	1	00	68	00
056	**52.31V06C18** 6" E.S.V.P. SPUR FOR HOUSE CONNECTION ON 18" E.S.V.P. COMBINED SEWER	60.00	EACH	1	00	60	00
057	**52.31V08C15** 8" E.S.V.P. SPUR FOR HOUSE CONNECTION ON 15" E.S.V.P. COMBINED SEWER	3.00	EACH	1	00	3	00
058	**52.41D06R** 6" D.I.P. HOUSE CONNECTION DRAIN ON CONCRETE CRADLE (RECONNECTION)	3,770.00	L.F.	1	00	3,770	00
059	**52.41D08R** 8" D.I.P. HOUSE CONNECTION DRAIN ON CONCRETE CRADLE (RECONNECTION)	130.00	L.F.	1	00	130	00
060	**52.41V06R** 6" E.S.V.P. HOUSE CONNECTION DRAIN ON CONCRETE CRADLE (RECONNECTION)	500.00	L.F.	1	00	500	00

Department of Design and Construction

NEW YORK CITY DEPARTMENT OF DESIGN AND CONSTRUCTION
DIVISION OF INFRASTRUCTURE - BUREAU OF DESIGN

PROJECT ID: BED798
CONTRACT PIN: 8502017WM0008C

12/29/2016 2:29 PM

BID SCHEDULE FORM

COL. 1 SEQ. NO.	COL. 2 ITEM NUMBER AND DESCRIPTION	COL. 3 ENGINEER'S ESTIMATE OF QUANTITY	COL. 4 UNIT	COL. 5 UNIT PRICE (IN FIGURES) DOLLARS	CTS.	COL. 6 EXTENDED AMOUNT (IN FIGURES) DOLLARS	CTS.
061	52.41V08R 8" E.S.V.P. HOUSE CONNECTION DRAIN ON CONCRETE CRADLE (RECONNECTION)	100.00	L.F.	1	00	100	00
062	52.51RP REMOVAL OF PROTRUDING SERVICE CONNECTIONS	1.00	EACH	100	00	100	00
063	52.61RC RE-OPENING OF SERVICE CONNECTIONS	1.00	EACH	100	00	100	00
064	53.11DR TELEVISION INSPECTION AND DIGITAL AUDIO-VISUAL RECORDING OF SEWERS	3,970.00	L.F.	8	00	31,760	00
065	6.02 AAN UNCLASSIFIED EXCAVATION	4,286.00	C.Y.	0	10	428	60
066	6.02 XHEC INCREMENTAL COST FOR MODIFYING WORK METHODS NEAR (WITHIN 3 FEET OF) TRANSIT FACILITIES AND BUILDING VAULTS	2,703.00	C.Y.	0	10	270	30

Department of Design and Construction

NEW YORK CITY DEPARTMENT OF DESIGN AND CONSTRUCTION
DIVISION OF INFRASTRUCTURE - BUREAU OF DESIGN

PROJECT ID: BED798
CONTRACT PIN: 8502017WM0008C

12/29/2016 2:29 PM

BID SCHEDULE FORM

COL. 1 SEQ. NO.	COL. 2 ITEM NUMBER AND DESCRIPTION	COL. 3 ENGINEER'S ESTIMATE OF QUANTITY	COL. 4 UNIT	COL. 5 UNIT PRICE (IN FIGURES) DOLLARS	CTS	COL. 6 EXTENDED AMOUNT (IN FIGURES) DOLLARS	CTS
067	6.02 XSCW INCREMENTAL COST FOR USING SPECIAL CARE WORK METHODS NEAR (FROM 3 FEET TO 50 FEET) TRANSIT FACILITIES	1,074.00	C.Y.	0	10	107	40
068	6.03 AA STRIPPING PAVEMENT SURFACE (ASPHALTIC CONCRETE)	94.00	S.Y.	200	00	18,800	00
069	6.18 W WICKET FENCE (12" HIGH)	220.00	L.F.	100	00	22,000	00
070	6.22 F ADDITIONAL HARDWARE	110.00	LBS.	10	00	1,100	00
071	6.23 AB REMOVE EXISTING FIRE ALARM POST	3.00	EACH	470	00	1,410	00
072	6.23 BA FURNISH AND INSTALL FIRE ALARM POST AND SUBBASE IN ACCORDANCE WITH F.D. STD. DWG. #141	3.00	EACH	1,740	00	5,220	00

Department of Design and Construction

NEW YORK CITY DEPARTMENT OF DESIGN AND CONSTRUCTION
DIVISION OF INFRASTRUCTURE - BUREAU OF DESIGN

PROJECT ID: BED798
CONTRACT PIN: 8502017WM0008C

12/29/2016 2:29 PM

BID SCHEDULE FORM

COL 1 SEQ NO	COL 2 ITEM NUMBER and DESCRIPTION	COL 3 ENGINEER'S ESTIMATE OF QUANTITY	COL 4 UNIT	COL 5 UNIT PRICE (IN FIGURES) DOLLARS	CTS	COL 6 EXTENDED AMOUNT (IN FIGURES) DOLLARS	CTS
073	**6.23 BD** FURNISH AND INSTALL 4-PAIR FIRE ALARM CABLE	1,560.00	L.F.	9	00	14,040	00
074	**6.23 BFB** FURNISH AND INSTALL FIRE DEPARTMENT 24 WIRE TERMINAL BOX AND TERMINATE FIRE ALARM CABLES	3.00	EACH	1,930	00	5,790	00
075	**6.23 BGSE** FURNISH AND INSTALL 4" P.V.C. CONDUIT, SCHEDULE 40, U.L. 651 (WITH PAVEMENT EXCAVATION)	62.00	L.F.	1	00	62	00
076	**6.23 BHE** FURNISH AND INSTALL 4" 90-DEGREE P.V.C. WIDE BEND, SCHEDULE 40, U.L. 651 (WITH PAVEMENT EXCAVATION) IN ACCORDANCE WITH F.D. STD. DWG. #141 OR #145AA	3.00	EACH	320	00	960	00
077	**6.23 BP** FURNISH AND INSTALL FIRE ALARM PEDESTAL BUMPERS (2 REQUIRED PER SET) IN ACCORDANCE WITH F.D. STD. DWG. #168	3.00	SETS	600	00	1,800	00
078	**6.23 DDE** FURNISH AND INSTALL 40 PAIR FIRE ALARM CABLE	540.00	L.F.	80	00	43,200	00

Department of Design and Construction

NEW YORK CITY DEPARTMENT OF DESIGN AND CONSTRUCTION
DIVISION OF INFRASTRUCTURE - BUREAU OF DESIGN

PROJECT ID: BED798
CONTRACT PIN: 8502017WM0008C

12/29/2016 2:29 PM

BID SCHEDULE FORM

COL 1 SEQ. NO.	COL 2 ITEM NUMBER AND DESCRIPTION	COL 3 ENGINEER'S ESTIMATE OF QUANTITY	COL 4 UNITS	COL 5 UNIT PRICE (IN FIGURES) DOLLARS	CTS	COL 6 EXTENDED AMOUNT (IN FIGURES) DOLLARS	CTS
079	6.25 RS TEMPORARY SIGNS	5,898.00	S.F.	0	01	58	98
080	6.26 TIMBER CURB	25,926.00	L.F.	0	01	259	26
081	6.27 DBH DEMOLITION, REMOVAL AND DISPOSAL OF BENCHES	3.00	EACH	100	00	300	00
082	6.28 AA LIGHTED TIMBER BARRICADES	3,710.00	L.F.	0	10	371	00
083	6.29 TTM TEMPORARY TUBULAR MARKERS	350.00	EACH	10	00	3,500	00
084	6.36 DR STRUCTURAL REPAIR AND ADJUSTMENT OF UTILITY STRUCTURES	6.00	C.Y.	1	00	6	00

Department of Design and Construction

NEW YORK CITY DEPARTMENT OF DESIGN AND CONSTRUCTION
DIVISION OF INFRASTRUCTURE - BUREAU OF DESIGN

PROJECT ID: BED798
CONTRACT PIN: 8502017WM0008C

12/29/2016 2:29 PM

BID SCHEDULE FORM

COL 1 SEQ. NO.	COL 2 ITEM NUMBER and DESCRIPTION	COL 3 ENGINEER'S ESTIMATE OF QUANTITY	COL 4 UNIT	COL 5 UNIT PRICE (IN FIGURES) DOLLARS	CTS	COL 6 EXTENDED AMOUNT (IN FIGURES) DOLLARS	CTS
085	6.40 D ENGINEER'S FIELD OFFICE (TYPE D)	48.00	MONTH	20,000	00	960,000	00
086	6.43 PHOTOGRAPHS	100.00	SETS	25	00	2,500	00
087	6.44 THERMOPLASTIC REFLECTORIZED PAVEMENT MARKINGS (4" WIDE)	37,934.00	L.F.	1	50	56,901	00
088	6.49 TEMPORARY PAVEMENT MARKINGS (4" WIDE)	31,230.00	L.F.	0	25	7,807	50
089	6.52 CG CROSSING GUARD	7,580.00	P/HR	100	00	758,000	00
090	6.53 REMOVE EXISTING LANE MARKINGS (4" WIDE)	25,290.00	L.F.	0	50	12,645	00

Department of Design and Construction

NEW YORK CITY DEPARTMENT OF DESIGN AND CONSTRUCTION
DIVISION OF INFRASTRUCTURE - BUREAU OF DESIGN

PROJECT ID: BED798
CONTRACT PIN: 8502017WM0008C

12/29/2016 2:29 PM

BID SCHEDULE FORM

COL 1 SEQ NO	COL 2 ITEM NUMBER & DESCRIPTION	COL 3 ENGINEER'S ESTIMATE OF QUANTITY	COL 4 UNIT	COL 5 UNIT PRICE (IN FIGURES) DOLLARS	CTS	COL 6 EXTENDED AMOUNT (IN FIGURES) DOLLARS	CTS
091	6.55 SAWCUTTING EXISTING PAVEMENT	17,179.00	L.F.	0	01	171	79
092	6.59 P TEMPORARY CONCRETE BARRIER	15,602.00	L.F.	0	01	156	02
093	6.59 PF TEMPORARY CONCRETE BARRIER WITH FENCE	950.00	L.F.	1	00	950	00
094	6.82 A REMOVING EXISTING TRAFFIC AND STREET NAME SIGNS	60.00	S.F.	0	10	6	00
095	6.82 B REMOVING EXISTING TRAFFIC AND STREET NAME SIGN POSTS	53.00	L.F.	0	10	5	30
096	6.83 AA FURNISHING NEW NON-REFLECTORIZED TRAFFIC SIGNS	9.00	S.F.	1	00	9	00

Department of Design and Construction

NEW YORK CITY DEPARTMENT OF DESIGN AND CONSTRUCTION
DIVISION OF INFRASTRUCTURE - BUREAU OF DESIGN

PROJECT ID: BED798
CONTRACT PIN: 8502017WM0008C

12/29/2016 2:29 PM

BID SCHEDULE FORM

COL 1 SEQ. NO.	COL 2 ITEM NUMBER and DESCRIPTION	COL 3 ENGINEER'S ESTIMATE OF QUANTITY	COL 4 UNIT	COL 5 UNIT PRICE (IN FIGURES) DOLLARS	CTS	COL 6 EXTENDED AMOUNT (IN FIGURES) DOLLARS	CTS
097	6.83 AB FURNISHING NEW TRAFFIC SIGN POSTS	53.00	L.F.	1	00	53	00
098	6.83 AR FURNISHING NEW REFLECTORIZED TRAFFIC SIGNS	41.00	S.F.	1	00	41	00
099	6.83 BA INSTALLING TRAFFIC SIGNS	49.00	S.F.	1	00	49	00
100	6.83 BB INSTALLING TRAFFIC SIGN POSTS	53.00	L.F.	1	00	53	00
101	6.84 B LOLLIPOP TYPE BUS STOP SIGNS PRICE BID SHALL BE FOR THE FIXED SUM OF $ 3,500.00	1.00	F.S.	3,500	00	$3,500	00

Department of Design and Construction

NEW YORK CITY DEPARTMENT OF DESIGN AND CONSTRUCTION
DIVISION OF INFRASTRUCTURE - BUREAU OF DESIGN

PROJECT ID: BED798
CONTRACT PIN: 8502017WM0008C

12/29/2016 2:29 PM

BID SCHEDULE FORM

COL. 1 SEQ. NO.	COL. 2 ITEM NUMBER AND DESCRIPTION	COL. 3 ENGINEER'S ESTIMATE OF QUANTITY	COL. 4 UNIT	COL. 5 UNIT PRICE (IN FIGURES) DOLLARS	CTS	COL. 6 EXTENDED AMOUNT (IN FIGURES) DOLLARS	CTS
102	6.85 A TRAFFIC ENFORCEMENT AGENTS PRICE BID SHALL BE FOR THE FIXED SUM OF $ 823,935.08	1.00	F.S.	823,935	08	$823,935	08
103	6.86 AA FURNISHING NEW STREET NAME SIGNS	14.00	S.F.	1	00	14	00
104	6.86 BA INSTALLING STREET NAME SIGNS	14.00	S.F.	1	00	14	00
105	6.87 PLASTIC BARRELS	6,236.00	EACH	0	10	623	60
106	6.91 REFLECTIVE CRACKING MEMBRANE (18" WIDE)	832.00	L.F.	3	00	2,496	00

Department of Design and Construction

NEW YORK CITY DEPARTMENT OF DESIGN AND CONSTRUCTION
DIVISION OF INFRASTRUCTURE - BUREAU OF DESIGN

PROJECT ID: BED798
CONTRACT PIN: 8502017WM0008C

12/29/2016 2:29 PM

BID SCHEDULE FORM

COL 1 SEQ. NO.	COL 2 ITEM NUMBER and DESCRIPTION	COL 3 ENGINEER'S ESTIMATE OF QUANTITY	COL 4 UNIT	COL 5 UNIT PRICE (IN FIGURES) DOLLARS	CTS	COL 6 EXTENDED AMOUNT (IN FIGURES) DOLLARS	CTS
107	6.97 A EXTRA-HIGH-EARLY STRENGTH CONCRETE	500.00	C.Y.	200	00	100,000	00
108	6.99 AUDIO AND VIDEO DOCUMENTATION SURVEY	1.00	L.S.	50,000	00	50,000	00
109	60.11R516 FURNISHING AND DELIVERING 16-INCH DUCTILE IRON RESTRAINED JOINT PIPE (CLASS 55)	39.00	L.F.	225	00	8,775	00
110	60.11R520 FURNISHING AND DELIVERING 20-INCH DUCTILE IRON RESTRAINED JOINT PIPE (CLASS 55)	2,046.00	L.F.	185	00	378,510	00
111	60.11R606 FURNISHING AND DELIVERING 6-INCH DUCTILE IRON RESTRAINED JOINT PIPE (CLASS 56)	349.00	L.F.	45	00	15,705	00
112	60.11R608 FURNISHING AND DELIVERING 8-INCH DUCTILE IRON RESTRAINED JOINT PIPE (CLASS 56)	2,860.00	L.F.	50	00	143,000	00

BID SCHEDULE FORM

COL 1 SEQ. NO.	COL 2 ITEM NUMBER & DESCRIPTION	COL 3 ENGINEER'S ESTIMATE OF QUANTITY	COL 4 UNIT	COL 5 UNIT PRICE (IN FIGURES) DOLLARS	CTS	COL 6 EXTENDED AMOUNT (IN FIGURES) DOLLARS	CTS
113	60.11R612 FURNISHING AND DELIVERING 12-INCH DUCTILE IRON RESTRAINED JOINT PIPE (CLASS 56)	1,105.00	L.F.	85	00	93,925	00
114	60.12D06 LAYING 6-INCH DUCTILE IRON PIPE AND FITTINGS	385.00	L.F.	200	00	77,000	00
115	60.12D08 LAYING 8-INCH DUCTILE IRON PIPE AND FITTINGS	2,975.00	L.F.	300	00	892,500	00
116	60.12D12 LAYING 12-INCH DUCTILE IRON PIPE AND FITTINGS	1,220.00	L.F.	350	00	427,000	00
117	60.12D16 LAYING 16-INCH DUCTILE IRON PIPE AND FITTINGS	49.00	L.F.	1,150	00	56,350	00
118	60.12D20 LAYING 20-INCH DUCTILE IRON PIPE AND FITTINGS	2,220.00	L.F.	350	00	777,000	00

Department of Design and Construction

NEW YORK CITY DEPARTMENT OF DESIGN AND CONSTRUCTION
DIVISION OF INFRASTRUCTURE - BUREAU OF DESIGN

PROJECT ID: BED798
CONTRACT PIN: 8502017WM0008C

12/29/2016 2:29 PM

BID SCHEDULE FORM

COL. 1 SEQ. NO.	COL. 2 ITEM NUMBER and DESCRIPTION	COL. 3 ENGINEER'S ESTIMATE OF QUANTITY	COL. 4 UNIT	COL. 5 UNIT PRICE (IN FIGURES) DOLLARS	CTS	COL. 6 EXTENDED AMOUNT (IN FIGURES) DOLLARS	CTS
119	60.13M0A24 FURNISHING AND DELIVERING DUCTILE IRON MECHANICAL JOINT 24 -INCH DIAMETER AND SMALLER FITTINGS, INCLUDING WEDGE TYPE RETAINER GLANDS	42.95	TONS	8,000	00	343,600	00
120	60.18BJC20EL FURNISHING, DELIVERING AND INSTALLING BELL JOINT CLAMPS, COMPLETE FOR 20-INCH PIPE AND LESS	16.00	EACH	10	00	160	00
121	60.21SP4T48 FURNISHING, DELIVERING AND LAYING 48-INCH STRAIGHT STEEL PIPE, 1/2-INCH WALL THICKNESS	90.00	L.F.	2,200	00	198,000	00
122	60.21SP6T72 FURNISHING, DELIVERING AND LAYING 72-INCH STRAIGHT STEEL PIPE, 3/4-INCH WALL THICKNESS	4,692.00	L.F.	2,450	00	11,495,400	00
123	60.22BR4T48 FURNISHING, DELIVERING AND LAYING 48-INCH STEEL BENDS AND REDUCERS, 1/2-INCH WALL THICKNESS	28.00	L.F.	3,000	00	84,000	00
124	60.22BR6T72 FURNISHING, DELIVERING AND LAYING 72-INCH STEEL BENDS AND REDUCERS, 3/4-INCH WALL THICKNESS	182.00	L.F.	5,000	00	910,000	00

Department of Design and Construction

NEW YORK CITY DEPARTMENT OF DESIGN AND CONSTRUCTION
DIVISION OF INFRASTRUCTURE - BUREAU OF DESIGN

PROJECT ID: BED798
CONTRACT PIN: 8502017WM0008C

12/29/2016 2:29 PM

BID SCHEDULE FORM

COL 1 SEQ. NO.	COL 2 ITEM NUMBER and DESCRIPTION	COL 3 ENGINEER'S ESTIMATE OF QUANTITY	COL 4 UNIT	COL 5 UNIT PRICE (IN FIGURES) DOLLARS	CTS.	COL 6 EXTENDED AMOUNT (IN FIGURES) DOLLARS	CTS.
125	**60.25PSO** FURNISHING, DELIVERING AND INSTALLING PLATE STEEL OUTLETS ON STEEL PIPE, ACCESS MANHOLE OUTLETS WITH COVERS, AND NUTS AND BOLTS COMPLETE	15,300.00	LBS.	12	00	183,600	00
126	**60.27RSC48** FURNISHING, DELIVERING AND INSTALLING 48-INCH DIAMETER BOLTED, SPLIT SLEEVE-TYPE RESTRAINED COUPLING	2.00	EACH	30,000	00	60,000	00
127	**60.27RSC72** FURNISHING, DELIVERING AND INSTALLING 72-INCH DIAMETER BOLTED, SPLIT SLEEVE-TYPE RESTRAINED COUPLING	1.00	EACH	62,000	00	62,000	00
128	**60.29CP** FURNISHING, INSTALLING AND TESTING CORROSION CONTROL AND/OR CATHODIC PROTECTION SYSTEM	1.00	L.S.	450,000	00	450,000	00
129	**61.11DFM06** FURNISHING AND DELIVERING 6-INCH FLANGED-MECHANICAL JOINT DUCTILE IRON GATE VALVE COMPLETE WITH WEDGE TYPE RETAINER GLAND	7.00	EACH	1,200	00	8,400	00

Department of Design and Construction

NEW YORK CITY DEPARTMENT OF DESIGN AND CONSTRUCTION
DIVISION OF INFRASTRUCTURE - BUREAU OF DESIGN

PROJECT ID: BED798
CONTRACT PIN: 8502017WM0008C

12/29/2016 2:29 PM

BID SCHEDULE FORM

COL. 1 SEC. NO.	COL. 2 ITEM NUMBER and DESCRIPTION	COL. 3 ENGINEER'S ESTIMATE OF QUANTITY	COL. 4 UNIT	COL. 5 UNIT PRICE (IN FIGURES) DOLLARS	CTS	COL. 6 EXTENDED AMOUNT (IN FIGURES) DOLLARS	CTS
130	**61.11DFM20** FURNISHING AND DELIVERING 20-INCH FLANGED-MECHANICAL JOINT DUCTILE IRON GATE VALVE COMPLETE WITH WEDGE TYPE RETAINER GLAND	3.00	EACH	3,000	00	9,000	00
131	**61.11DMM06** FURNISHING AND DELIVERING 6-INCH MECHANICAL JOINT DUCTILE IRON GATE VALVE COMPLETE WITH WEDGE TYPE RETAINER GLANDS	23.00	EACH	1,200	00	27,600	00
132	**61.11DMM08** FURNISHING AND DELIVERING 8-INCH MECHANICAL JOINT DUCTILE IRON GATE VALVE COMPLETE WITH WEDGE TYPE RETAINER GLANDS	13.00	EACH	1,400	00	18,200	00
133	**61.11DMM12** FURNISHING AND DELIVERING 12-INCH MECHANICAL JOINT DUCTILE IRON GATE VALVE COMPLETE WITH WEDGE TYPE RETAINER GLANDS	7.00	EACH	3,000	00	21,000	00
134	**61.11DMM20** FURNISHING AND DELIVERING 20-INCH MECHANICAL JOINT DUCTILE IRON GATE VALVE COMPLETE WITH WEDGE TYPE RETAINER GLANDS	9.00	EACH	18,000	00	162,000	00

Department of Design and Construction

NEW YORK CITY DEPARTMENT OF DESIGN AND CONSTRUCTION
DIVISION OF INFRASTRUCTURE - BUREAU OF DESIGN

PROJECT ID: BED798
CONTRACT PIN: 8502017WM0008C

12/29/2016 2:29 PM

BID SCHEDULE FORM

COL. 1 SEQ. No.	COL. 2 ITEM NUMBER and DESCRIPTION	COL. 3 ENGINEER'S ESTIMATE OF QUANTITY	COL. 4 UNIT	COL. 5 UNIT PRICE (IN FIGURES) DOLLARS	CTS	COL. 6 EXTENDED AMOUNT (IN FIGURES) DOLLARS	CTS
135	**61.11TWC03** FURNISHING AND DELIVERING 3-INCH WET CONNECTION TAPPING VALVE COMPLETE WITH WEDGE TYPE RETAINER GLANDS	3.00	EACH	800	00	2,400	00
136	**61.11TWC04** FURNISHING AND DELIVERING 4-INCH WET CONNECTION TAPPING VALVE COMPLETE WITH WEDGE TYPE RETAINER GLANDS	4.00	EACH	1,000	00	4,000	00
137	**61.11TWC06** FURNISHING AND DELIVERING 6-INCH WET CONNECTION TAPPING VALVE COMPLETE WITH WEDGE TYPE RETAINER GLANDS	3.00	EACH	1,200	00	3,600	00
138	**61.11TWC08** FURNISHING AND DELIVERING 8-INCH WET CONNECTION TAPPING VALVE COMPLETE WITH WEDGE TYPE RETAINER GLANDS	1.00	EACH	1,400	00	1,400	00
139	**61.12DFM06** SETTING 6-INCH FLANGED-MECHANICAL JOINT DUCTILE IRON GATE VALVE COMPLETE WITH WEDGE TYPE RETAINER GLAND	7.00	EACH	1	00	7	00
140	**61.12DFM20** SETTING 20-INCH FLANGED-MECHANICAL JOINT DUCTILE IRON GATE VALVE COMPLETE WITH WEDGE TYPE RETAINER GLAND	3.00	EACH	1	00	3	00

Department of Design and Construction

NEW YORK CITY DEPARTMENT OF DESIGN AND CONSTRUCTION
DIVISION OF INFRASTRUCTURE - BUREAU OF DESIGN

PROJECT ID: BED798
CONTRACT PIN: 8502017WM0008C

12/29/2016 2:29 PM

BID SCHEDULE FORM

COL 1 SEQ. NO.	COL 2 ITEM NUMBER AND DESCRIPTION	COL 3 ENGINEER'S ESTIMATE OF QUANTITY	COL 4 UNIT	COL 5 UNIT PRICE (IN FIGURES) DOLLARS	CTS	COL 6 EXTENDED AMOUNT (IN FIGURES) DOLLARS	CTS
141	61.12DMM06 SETTING 6-INCH MECHANICAL JOINT DUCTILE IRON GATE VALVE COMPLETE WITH WEDGE TYPE RETAINER GLANDS	23.00	EACH	1	00	23	00
142	61.12DMM08 SETTING 8-INCH MECHANICAL JOINT DUCTILE IRON GATE VALVE COMPLETE WITH WEDGE TYPE RETAINER GLANDS	13.00	EACH	1	00	13	00
143	61.12DMM12 SETTING 12-INCH MECHANICAL JOINT DUCTILE IRON GATE VALVE COMPLETE WITH WEDGE TYPE RETAINER GLANDS	7.00	EACH	1	00	7	00
144	61.12DMM20 SETTING 20-INCH MECHANICAL JOINT DUCTILE IRON GATE VALVE COMPLETE WITH WEDGE TYPE RETAINER GLANDS	9.00	EACH	1	00	9	00
145	61.12TWC03 SETTING 3-INCH WET CONNECTION TAPPING VALVE COMPLETE WITH WEDGE TYPE RETAINER GLANDS	3.00	EACH	1	00	3	00
146	61.12TWC04 SETTING 4-INCH WET CONNECTION TAPPING VALVE COMPLETE WITH WEDGE TYPE RETAINER GLANDS	4.00	EACH	1	00	4	00

Department of Design and Construction

NEW YORK CITY DEPARTMENT OF DESIGN AND CONSTRUCTION
DIVISION OF INFRASTRUCTURE - BUREAU OF DESIGN

PROJECT ID: BED798
CONTRACT PIN: 8502017WM0008C

12/29/2016 2:29 PM

BID SCHEDULE FORM

COL 1 SEQ NO	COL 2 ITEM NUMBER & DESCRIPTION	COL 3 ENGINEER'S ESTIMATE OF QUANTITY	COL 4 UNIT	COL 5 UNIT PRICE (IN FIGURES) DOLLARS	CTS	COL 6 EXTENDED AMOUNT (IN FIGURES) DOLLARS	CTS
147	61.12TWC06 SETTING 6-INCH WET CONNECTION TAPPING VALVE COMPLETE WITH WEDGE TYPE RETAINER GLANDS	3.00	EACH	1	00	3	00
148	61.12TWC08 SETTING 8-INCH WET CONNECTION TAPPING VALVE COMPLETE WITH WEDGE TYPE RETAINER GLANDS	1.00	EACH	1	00	1	00
149	61.21BVB48 FURNISHING, DELIVERING AND INSTALLING 48-INCH BUTTERFLY VALVE WITH BY-PASS ARRANGEMENT AND OUTLET, COMPLETE	2.00	EACH	105,000	00	210,000	00
150	61.21BVB72 FURNISHING, DELIVERING AND INSTALLING 72-INCH BUTTERFLY VALVE WITH BY-PASS ARRANGEMENT AND OUTLET, COMPLETE	1.00	EACH	210,000	00	210,000	00
151	61.31PV20 FURNISHING, DELIVERING AND INSTALLING 20-INCH PRESSURE REGULATOR VALVE	1.00	EACH	75,000	00	75,000	00
152	62.11SD FURNISHING AND DELIVERING HYDRANTS	15.00	EACH	3,200	00	48,000	00

Department of Design and Construction

NEW YORK CITY DEPARTMENT OF DESIGN AND CONSTRUCTION
DIVISION OF INFRASTRUCTURE - BUREAU OF DESIGN

PROJECT ID: BED798
CONTRACT PIN: 8502017WM0008C

12/29/2016 2:29 PM

BID SCHEDULE FORM

COL 1 SEQ. NO.	COL 2 ITEM NUMBER and DESCRIPTION	COL 3 ENGINEER'S ESTIMATE OF QUANTITY	COL 4 UNIT	COL 5 UNIT PRICE (IN FIGURES) DOLLARS	CTS	COL 6 EXTENDED AMOUNT (IN FIGURES) DOLLARS	CTS
153	62.11SS FURNISHING AND DELIVERING HYDRANTS - SMITH TYPE (S-2-LP)	13.00	EACH	3,500	00	45,500	00
154	62.12SG SETTING HYDRANTS COMPLETE WITH WEDGE TYPE RETAINER GLANDS	28.00	EACH	1,500	00	42,000	00
155	62.13RH REMOVING HYDRANTS	22.00	EACH	1	00	22	00
156	62.14FD FURNISHING, DELIVERING AND INSTALLING HYDRANT FENDERS WITH DECORATIVE CAPS (BLACK)	34.00	EACH	200	00	6,800	00
157	62.14FS FURNISHING, DELIVERING AND INSTALLING HYDRANT FENDERS	39.00	EACH	165	00	6,435	00
158	63.11MH FURNISHING, DELIVERING AND INSTALLING 36-INCH CAST IRON MANHOLE HEADS AND COVERS	7.00	TONS	800	00	5,600	00

Department of Design and Construction

NEW YORK CITY DEPARTMENT OF DESIGN AND CONSTRUCTION
DIVISION OF INFRASTRUCTURE - BUREAU OF DESIGN

PROJECT ID: BED798
CONTRACT PIN: 8502017WM0008C

12/29/2016 2:29 PM

BID SCHEDULE FORM

COL. 1 SEQ. NO.	COL. 2 ITEM NUMBER AND DESCRIPTION	COL. 3 ENGINEER'S ESTIMATE OF QUANTITY	COL. 4 UNIT	COL. 5 UNIT PRICE (IN FIGURES) DOLLARS	CTS.	COL. 6 EXTENDED AMOUNT (IN FIGURES) DOLLARS	CTS.
159	**63.11MS** FURNISHING, DELIVERING AND INSTALLING MANHOLE STEPS TYPE PS2-PF	155.00	EACH	75	00	11,625	00
160	**63.11VC** FURNISHING AND DELIVERING VARIOUS CASTINGS	51.00	TONS	400	00	20,400	00
161	**64.11EL** WITHDRAWING AND REPLACING HOUSE SERVICES USING 1-1/2-INCH OR LARGER SCREW TAPS	171.00	EACH	250	00	42,750	00
162	**64.11ST** WITHDRAWING AND REPLACING HOUSE SERVICES USING SMALLER THAN 1-1/2-INCH SCREW TAPS	37.00	EACH	300	00	11,100	00
163	**64.12COEG** CUTTING AND OFFSETTING HOUSE SERVICE WATER CONNECTIONS (EQUAL TO OR GREATER THAN 3-INCH DIAMETER)	175.00	L.F.	1	00	175	00
164	**64.12COLT** CUTTING AND OFFSETTING HOUSE SERVICE WATER CONNECTIONS (LESS THAN 3-INCH DIAMETER)	3,400.00	L.F.	1	00	3,400	00

Department of Design and Construction

NEW YORK CITY DEPARTMENT OF DESIGN AND CONSTRUCTION
DIVISION OF INFRASTRUCTURE - BUREAU OF DESIGN

PROJECT ID: BED798
CONTRACT PIN: 8502017WM0008C

12/29/2016 2:29 PM

BID SCHEDULE FORM

COL. 1 SEQ. NO.	COL. 2 ITEM NUMBER and DESCRIPTION	COL. 3 ENGINEER'S ESTIMATE OF QUANTITY	COL. 4 UNIT	COL. 5 UNIT PRICE (IN FIGURES) DOLLARS	CTS.	COL. 6 EXTENDED AMOUNT (IN FIGURES) DOLLARS	CTS.
165	**64.12ESEG** EXTENDING HOUSE SERVICE WATER CONNECTIONS (EQUAL TO OR GREATER THAN 3-INCH DIAMETER)	50.00	L.F.	200	00	10,000	00
166	**64.12ESLT** EXTENDING HOUSE SERVICE WATER CONNECTIONS (LESS THAN 3-INCH DIAMETER)	150.00	L.F.	200	00	30,000	00
167	**64.13WC08** FURNISHING, DELIVERING AND INSTALLING WET CONNECTION SLEEVE ON 8-INCH WATER MAIN PIPE WITH VARIOUS OUTLETS	4.00	EACH	1,500	00	6,000	00
168	**64.13WC12** FURNISHING, DELIVERING AND INSTALLING WET CONNECTION SLEEVE ON 12-INCH WATER MAIN PIPE WITH VARIOUS OUTLETS	2.00	EACH	2,000	00	4,000	00
169	**64.13WC20** FURNISHING, DELIVERING AND INSTALLING WET CONNECTION SLEEVE ON 20-INCH WATER MAIN PIPE WITH VARIOUS OUTLETS	5.00	EACH	3,000	00	15,000	00
170	**65.11BR** FURNISHING, DELIVERING AND INSTALLING BANDS, RODS, WASHERS, ETC., COMPLETE, FOR RESTRAINING JOINTS	4,951.00	LBS.	6	00	29,706	00

Department of Design and Construction

NEW YORK CITY DEPARTMENT OF DESIGN AND CONSTRUCTION
DIVISION OF INFRASTRUCTURE - BUREAU OF DESIGN

PROJECT ID: BED798
CONTRACT PIN: 8502017WM0008C

12/29/2016 2:29 PM

BID SCHEDULE FORM

COL 1 SEQ. NO.	COL 2 ITEM NUMBER and DESCRIPTION	COL 3 ENGINEER'S ESTIMATE OF QUANTITY	COL 4 UNIT	COL 5 UNIT PRICE (IN FIGURES) DOLLARS	CTS.	COL 6 EXTENDED AMOUNT (IN FIGURES) DOLLARS	CTS.
171	**65.21PS** FURNISHING AND PLACING POLYETHYLENE SLEEVE **Unit price bid shall not be less than: $ 0.50**	1,465.00	L.F.	0	50	732	50
172	**65.31FF** FURNISHING, DELIVERING AND PLACING FILTER FABRIC **Unit price bid shall not be less than: $ 0.10**	172,957.00	S.F.	0	10	17,295	70
173	**65.41PS06** FURNISHING, DELIVERING AND INSTALLING 6-INCH PIPE-TO-WALL PENETRATION SEAL, INCLUDING STEEL SLEEVE AND ANCHOR/WATER STOP PLATE	4.00	EACH	1,200	00	4,800	00
174	**65.41PS20** FURNISHING, DELIVERING AND INSTALLING 20-INCH PIPE-TO-WALL PENETRATION SEAL, INCLUDING STEEL SLEEVE AND ANCHOR/WATER STOP PLATE	5.00	EACH	2,000	00	10,000	00
175	**65.41PS48** FURNISHING, DELIVERING AND INSTALLING 48-INCH PIPE-TO-WALL PENETRATION SEAL, INCLUDING STEEL SLEEVE AND ANCHOR/WATER STOP PLATE	4.00	EACH	5,500	00	22,000	00

BID SCHEDULE FORM

COL. 1 SEQ. No.	COL. 2 ITEM NUMBER and DESCRIPTION	COL. 3 ENGINEER'S ESTIMATE OF QUANTITY	COL. 4 UNIT	COL. 5 UNIT PRICE (IN FIGURES) DOLLARS	CTS	COL. 6 EXTENDED AMOUNT (IN FIGURES) DOLLARS	CTS
176	**65.41PS72** FURNISHING, DELIVERING AND INSTALLING 72-INCH PIPE-TO-WALL PENETRATION SEAL, INCLUDING STEEL SLEEVE AND ANCHOR/WATER STOP PLATE	4.00	EACH	8,500	00	34,000	00
177	**65.51PC** FURNISHING AND PLACING CAST-IN-PLACE CONCRETE CLASS 40 AND PRECAST CONCRETE CLASS 50	360.00	C.Y.	2,200	00	792,000	00
178	**65.61SS** FURNISHING, DELIVERING AND PLACING STRUCTURAL, REINFORCING AND MISCELLANEOUS STEEL	40,200.00	LBS.	4	00	160,800	00
179	**65.71SG** FURNISHING, DELIVERING AND PLACING SCREENED GRAVEL OR SCREENED BROKEN STONE BEDDING	4,721.00	C.Y.	20	00	94,420	00
180	**7.13 B** MAINTENANCE OF SITE **Unit price bid shall not be less than: $ 8,000.00**	42.00	MONTH	20,000	00	840,000	00
181	**7.19** LOAD TRANSFER JOINT	70.00	L.F.	0	50	35	00

Department of Design and Construction

NEW YORK CITY DEPARTMENT OF DESIGN AND CONSTRUCTION
DIVISION OF INFRASTRUCTURE - BUREAU OF DESIGN

PROJECT ID: BED798
CONTRACT PIN: 8502017WM0008C

12/29/2016 2:29 PM

BID SCHEDULE FORM

COL 1 SEQ. NO.	COL 2 ITEM NUMBER and DESCRIPTION	COL 3 ENGINEER'S ESTIMATE OF QUANTITY	COL 4 UNIT	COL 5 UNIT PRICE (IN FIGURES) DOLLARS	CTS	COL 6 EXTENDED AMOUNT (IN FIGURES) DOLLARS	CTS
182	7.36 PEDESTRIAN STEEL BARRICADES	17,534.00	L.F.	0	01	175	34
183	7.50 CB2 CITY BENCH WITH BACK (V 2)	6.00	EACH	3,000	00	18,000	00
184	7.88 AA RODENT INFESTATION SURVEY AND MONITORING **Unit price bid shall not be less than: $ 5,551.00**	1.00	L.S.	20,000	00	20,000	00
185	7.88 AB RODENT BAIT STATIONS **Unit price bid shall not be less than: $ 60.00**	10,859.00	EACH	60	00	~~659~~ VN 651,540	00
186	7.88 AC BAITING OF RODENT BAIT STATIONS **Unit price bid shall not be less than: $ 9.50**	10,859.00	EACH	9	50	103,160	50
187	7.88 AD WATERBUG BAIT APPLICATIONS **Unit price bid shall not be less than: $ 65.00**	843.00	BLOCK	65	00	54,795	00

Department of Design and Construction

NEW YORK CITY DEPARTMENT OF DESIGN AND CONSTRUCTION
DIVISION OF INFRASTRUCTURE - BUREAU OF DESIGN

PROJECT ID: BED798
CONTRACT PIN: 8502017WM0008C

12/29/2016 2:29 PM

BID SCHEDULE FORM

COL. 1 SEQ. NO	COL. 2 ITEM NUMBER and DESCRIPTION	COL. 3 ENGINEER'S ESTIMATE OF QUANTITY	COL. 4 UNIT	COL. 5 UNIT PRICE (IN FIGURES) DOLLARS	CTS	COL. 6 EXTENDED AMOUNT (IN FIGURES) DOLLARS	CTS
188	70.21DK DECKING	3,758.00	S.Y.	0	50	1,879	00
189	70.31FN FENCING **Unit price bid shall not be less than: $ 2.00**	31,273.00	L.F.	2	00	62,546	00
190	70.51EO EXCAVATION OF BOULDERS IN OPEN CUT **Unit price bid shall not be less than: $ 75.00**	70.00	C.Y.	75	00	5,250	00
191	70.61RE ROCK EXCAVATION	40.00	C.Y.	400	00	16,000	00
192	70.71SB STONE BALLAST **Unit price bid shall not be less than: $ 15.00**	20.00	C.Y.	15	00	300	00
193	70.81CB CLEAN BACKFILL **Unit price bid shall not be less than: $ 15.00**	7,458.00	C.Y.	15	00	111,870	00

Department of Design and Construction

NEW YORK CITY DEPARTMENT OF DESIGN AND CONSTRUCTION
DIVISION OF INFRASTRUCTURE - BUREAU OF DESIGN

PROJECT ID: BED798
CONTRACT PIN: 8502017WM0008C

12/29/2016 2:29 PM

BID SCHEDULE FORM

COL 1 SEQ. NO.	COL 2 ITEM NUMBER and DESCRIPTION	COL 3 ENGINEER'S ESTIMATE OF QUANTITY	COL 4 UNIT	COL 5 UNIT PRICE (IN FIGURES) DOLLARS	CTS	COL 6 EXTENDED AMOUNT (IN FIGURES) DOLLARS	CTS
194	**70.91SW12** FURNISHING AND PLACING SHEETING AND BRACING IN TRENCH FOR WATER MAIN PIPE 12-INCH IN DIAMETER AND LESS	9,275.00	S.F.	0	10	927	50
195	**70.91SW20** FURNISHING AND PLACING SHEETING AND BRACING IN TRENCH FOR WATER MAIN PIPE 20-INCH IN DIAMETER	26,219.00	S.F.	0	01	262	19
196	**72.11HF** HYDRAULIC FILL FOR ABANDONED SEWERS AND WATER MAINS	2,210.00	C.Y.	0	10	221	00
197	**73.11AB** ADDITIONAL BRICK MASONRY **Unit price bid shall not be less than: $ 62.50**	165.00	C.Y.	62	50	10,312	50
198	**73.21AC** ADDITIONAL CONCRETE **Unit price bid shall not be less than: $ 62.50**	90.00	C.Y.	62	50	5,625	00
199	**73.31AE0** ADDITIONAL EARTH EXCAVATION INCLUDING TEST PITS (ALL DEPTHS) **Unit price bid shall not be less than: $ 20.00**	966.00	C.Y.	20	00	19,320	00

Department of Design and Construction

NEW YORK CITY DEPARTMENT OF DESIGN AND CONSTRUCTION
DIVISION OF INFRASTRUCTURE - BUREAU OF DESIGN

PROJECT ID: BED798
CONTRACT PIN: 8502017WM0008C

12/29/2016 2:29 PM

BID SCHEDULE FORM

COL. 1 SEQ. NO.	COL. 2 ITEM NUMBER and DESCRIPTION	COL. 3 ENGINEER'S ESTIMATE OF QUANTITY	COL. 4 UNIT	COL. 5 UNIT PRICE (IN FIGURES) DOLLARS	CTS	COL. 6 EXTENDED AMOUNT (IN FIGURES) DOLLARS	CTS
200	73.41AG ADDITIONAL SELECT GRANULAR BACKFILL **Unit price bid shall not be less than: $ 15.00**	1,023.00	C.Y.	15	00	15,345	00
201	73.51AS ADDITIONAL STEEL REINFORCING BARS **Unit price bid shall not be less than: $ 1.00**	200.00	LBS.	1	00	200	00
202	73.61AT ADDITIONAL STONE BALLAST **Unit price bid shall not be less than: $ 15.00**	700.00	C.Y.	15	00	10,500	00
203	75.11RT REMOVAL OF ABANDONED TRACKS	603.00	L.F.	1	00	603	00
204	79.11AATA ALLOWANCE FOR ASBESTOS ABATEMENT WORK PERFORMED ON EXISTING TRANSIT AUTHORITY DUCT INSULATION (REMOVAL OF ACM, REPLACEMENT WITH NON-ACM, AND SUPPORT AND PROTECTION OF EXISTING TRANSIT AUTHORITY DUCT, COMPLETE) **PRICE BID SHALL BE FOR THE FIXED SUM OF $ 30,000.00**	1.00	F.S.	30,000	00	$30,000	00

Department of Design and Construction

NEW YORK CITY DEPARTMENT OF DESIGN AND CONSTRUCTION
DIVISION OF INFRASTRUCTURE - BUREAU OF DESIGN

PROJECT ID: BED798
CONTRACT PIN: 8502017WM0008C

12/29/2016 2:29 PM

BID SCHEDULE FORM

COL. 1 SEQ. NO.	COL. 2 ITEM NUMBER and DESCRIPTION	COL. 3 ENGINEER'S ESTIMATE OF QUANTITY	COL. 4 UNIT	COL. 5 UNIT PRICE (IN FIGURES) DOLLARS	CTS.	COL. 6 EXTENDED AMOUNT (IN FIGURES) DOLLARS	CTS.
205	8.01 C1 HANDLING, TRANSPORTING AND DISPOSAL OF NON-HAZARDOUS CONTAMINATED SOIL	6,000.00	TONS	0	10	600	00
206	8.01 C2 SAMPLING AND TESTING OF CONTAMINATED/POTENTIALLY HAZARDOUS SOIL FOR DISPOSAL PURPOSES	20.00	SETS	100	00	2,000	00
207	8.01 H HANDLING, TRANSPORTING AND DISPOSAL OF HAZARDOUS SOIL	500.00	TONS	125	00	62,500	00
208	8.01 S HEALTH AND SAFETY	1.00	L.S.	500	00	500	00
209	8.01 W1 REMOVAL, TREATMENT, AND DISCHARGE/DISPOSAL OF CONTAMINATED WATER	20.00	DAY	100	00	2,000	00
210	8.01 W2 SAMPLING AND TESTING OF CONTAMINATED WATER	5.00	SETS	100	00	500	00

Department of Design and Construction

NEW YORK CITY DEPARTMENT OF DESIGN AND CONSTRUCTION
DIVISION OF INFRASTRUCTURE - BUREAU OF DESIGN

PROJECT ID: BED798
CONTRACT PIN: 8502017WM0008C

12/29/2016 2:29 PM

BID SCHEDULE FORM

COL 1 SEQ NO	COL 2 ITEM NUMBER and DESCRIPTION	COL 3 ENGINEER'S ESTIMATE OF QUANTITY	COL 4 UNIT	COL 5 UNIT PRICE (IN FIGURES) DOLLARS	CTS	COL 6 EXTENDED AMOUNT (IN FIGURES) DOLLARS	CTS
211	8.02 A SPECIAL CARE EXCAVATION AND RESTORATION FOR SIDEWALK WORK	183.00	S.F.	0	10	18	30
212	8.02 B SPECIAL CARE EXCAVATION AND RESTORATION FOR CURB WORK	105.00	L.F.	0	10	10	50
213	8.08 VARIABLE MESSAGE BOARD	2.00	EACH	12,000	00	24,000	00
214	9.04 HW ALLOWANCE FOR ANTI-FREEZE ADDITIVE IN CONCRETE PRICE BID SHALL BE FOR THE FIXED SUM OF $ 25,000.00	1.00	F.S.	25,000	00	$25,000	00
215	9.99 FLASHING ARROW BOARD	4.00	EACH	4,000	00	16,000	00

Department of Design and Construction

NEW YORK CITY DEPARTMENT OF DESIGN AND CONSTRUCTION
DIVISION OF INFRASTRUCTURE - BUREAU OF DESIGN

PROJECT ID: BED798
CONTRACT PIN: 8502017WM0008C

12/29/2016 2:29 PM

BID SCHEDULE FORM

COL 1 SEQ NO.	COL 2 ITEM NUMBER & DESCRIPTION	COL 3 ENGINEER'S ESTIMATE OF QUANTITY	COL 4 UNIT	COL 5 UNIT PRICE (IN FIGURES) DOLLARS	CTS	COL 6 EXTENDED AMOUNT (IN FIGURES) DOLLARS	CTS
216	**M4.16 STUMP** STUMP REMOVAL	1.00	EACH	100	00	100	00
217	**PK-444GP** GRANITE PLINTH WITH PLAQUE	1.00	EACH	2,000	00	2,000	00
218	**SL-20.01.01** FURNISH AND INSTALL FOUNDATION FOR TYPE "B" OR "B12" POST WITH INTERNAL FLANGE, AS PER DRAWING E-3884	3.00	EACH	1,430	00	4,290	00
219	**SL-20.02.02** FURNISH AND INSTALL STANDARD TYPE ANCHOR BOLT FOUNDATION, AS PER DRAWING E-3788	1.00	EACH	1,080	00	1,080	00
220	**SL-20.07.02** ROTOR FOUNDATION. FURNISH AND INSTALL RIGID CONDUIT BEND, SIZE AS ORDERED.	1.00	EACH	1,080	00	1,080	00
221	**SL-20.08.02** REMOVE FOUNDATION OTHER THAN STANDARD TYPE.	3.00	EACH	100	00	300	00

Department of Design and Construction

NEW YORK CITY DEPARTMENT OF DESIGN AND CONSTRUCTION
DIVISION OF INFRASTRUCTURE - BUREAU OF DESIGN

PROJECT ID: BED798
CONTRACT PIN: 8502017WM0008C

12/29/2016 2:29 PM

BID SCHEDULE FORM

COL 1 SEQ NO	COL 2 ITEM NUMBER and DESCRIPTION	COL 3 ENGINEER'S ESTIMATE OF QUANTITY	COL 4 UNIT	COL 5 UNIT PRICE (IN FIGURES) DOLLARS	CTS	COL 6 EXTENDED AMOUNT (IN FIGURES) DOLLARS	CTS
222	**SL-21.01.08** FURNISH AND INSTALL TYPE "B12" LAMPPOST WITH INTERNAL FLANGE	3.00	EACH	5,070	00	15,210	00
223	**SL-21.04.06** FURNISH AND INSTALL "FLATBUSH AVENUE" LAMPPOST WITH OCTAGONAL TRANSFORMER BASE	1.00	EACH	11,320	00	11,320	00
224	**SL-21.09.01** REMOVE PARK TYPE LAMPPOST ON FOUNDATION, WITH ALL ATTACHMENTS, IF ANY.	3.00	EACH	950	00	2,850	00
225	**SL-21.09.08** REMOVE ALL STREET LIGHTING EQUIPMENT FROM TYPE "M-2" TRAFFIC POST (ARM(S), PHOTOELECTRIC CONTROLLER, LUMINAIRE (S), SHAFT EXTENSION, WIRING, ETC.)	1.00	EACH	470	00	470	00
226	**SL-21.09.09** REMOVE F.S. SPUN ALUMINUM, #10, ETC LAMPPOST, WITH ARMS(S), LUMINAIRE(S), ETC., WITH ALL ATTACHMENTS, IF ANY. REMOVE PORTION OF FOUNDATION. RESTORE TO SURROUNDING CONDITIONS.	1.00	EACH	700	00	700	00

Department of Design and Construction

NEW YORK CITY DEPARTMENT OF DESIGN AND CONSTRUCTION
DIVISION OF INFRASTRUCTURE - BUREAU OF DESIGN

PROJECT ID: BED798
CONTRACT PIN: 8502017WM0008C

12/29/2016 2:29 PM

BID SCHEDULE FORM

COL 1 SEQ. NO.	COL 2 ITEM NUMBER AND DESCRIPTION	COL 3 ENGINEER'S ESTIMATE OF QUANTITY	COL 4 UNIT	COL 5 UNIT PRICE (IN FIGURES) DOLLARS	CTS	COL 6 EXTENDED AMOUNT (IN FIGURES) DOLLARS	CTS
227	SL-22.15.03 FURNISH AND INSTALL 75 WATT LED "RIVERSIDE PARK" TYPE LUMINAIRE	3.00	EACH	2,110	00	6,330	00
228	SL-22.16.07 FURNISH AND INSTALL PENDANT TYPE (TEAR DROP) LED FIXTURE	2.00	EACH	2,110	00	4,220	00
229	SL-24.04.15 INSTALL ORNAMENTAL (TYPE, "BC", "M", "5TH AVE.", "LYRE", "CPW", "GCPW", ETC.) SHAFT EXTENSION/ARM(S) ASSEMBLY FOR M-2 TRAFFIC LAMPPOST.	1.00	EACH	750	00	750	00
230	SL-24.04.26 FURNISH TYPE "FLATBUSH AVE" SINGLE ARM EXTENSION/ARM ASSEMBLY WITH PEC RECEPTACLE FOR M-2 TRAFFIC POLE.	1.00	EACH	4,960	00	4,960	00
231	SL-26.01.04 FURNISH AND INSTALL LONG LIFE PHOTO ELECTRIC CONTROL WITH SURGE PROTECTION FOR LED LIGHT	2.00	EACH	110	00	220	00
232	SL-27.01.01 FURNISH AND INSTALL ALUMINUM TAG ON A LAMPPOST, AS PER DRAWING D-2861	3.00	EACH	180	00	540	00

Department of Design and Construction

NEW YORK CITY DEPARTMENT OF DESIGN AND CONSTRUCTION
DIVISION OF INFRASTRUCTURE - BUREAU OF DESIGN

PROJECT ID: BED798
CONTRACT PIN: 8502017WM0008C

12/29/2016 2:29 PM

BID SCHEDULE FORM

COL 1 SEQ. NO.	COL 2 ITEM NUMBER and DESCRIPTION	COL 3 ENGINEER'S ESTIMATE OF QUANTITY	COL 4 UNIT	COL 5 UNIT PRICE (IN FIGURES) DOLLARS	CTS	COL 6 EXTENDED AMOUNT (IN FIGURES) DOLLARS	CTS
233	SL-28.01.01 FURNISH AND INSTALL COPPER WELD GROUND ROD AND CLAMP, AS PER DRAWING H-5019	1.00	EACH	320	00	320	00
234	SL-33.01.02 FURNISH AND INSTALL NO. 6 AWG XLP COPPER CABLE OR EQUAL IN CONDUIT	374.00	L.F.	5	00	1,870	00
235	SL-33.03.01 FURNISH AND INSTALL #6 BARE COPPER CONDUCTOR IN CONDUIT OR OVERHEAD.	187.00	L.F.	5	00	935	00
236	SL-35.01.03 FURNISH AND INSTALL 1-1/2" HOT DIPPED GALVANIZED STEEL CONDUIT IN PAVED AREA.	110.00	L.F.	200	00	22,000	00
237	SL-35.03.03 FURNISH AND INSTALL 1-1/2" HOT DIPPED GALVANIZED STEEL CONDUIT IN UNPAVED AREA	55.00	L.F.	60	00	3,300	00
238	SL-35.03.04 FURNISH AND INSTALL 2" HOT DIPPED GALVANIZED STEEL CONDUIT IN UNPAVED AREA	22.00	L.F.	60	00	1,320	00

Department of Design and Construction

NEW YORK CITY DEPARTMENT OF DESIGN AND CONSTRUCTION
DIVISION OF INFRASTRUCTURE - BUREAU OF DESIGN

PROJECT ID: BED798
CONTRACT PIN: 8502017WM0008C

12/29/2016 2:29 PM

BID SCHEDULE FORM

COL 1 SEQ NO	COL 2 ITEM NUMBER and DESCRIPTION	COL 3 ENGINEER'S ESTIMATE OF QUANTITY	COL 4 UNIT	COL 5 UNIT PRICE (IN FIGURES) DOLLARS	CTS	COL 6 EXTENDED AMOUNT (IN FIGURES) DOLLARS	CTS
239	SL-37.05.08 FURNISH AND INSTALL TYPE 1812 ROADWAY CONCRETE BOX WITH CAST IRON FRAME AND COVER WITH TAMPER PROOF BOLTS AS PER DWG J-3179B.	1.00	EACH	2,920	00	2,920	00
240	T-1.1 INSTALL TYPE "S" OR "T" FOUNDATION	1.00	EACH	1,280	00	1,280	00
241	T-1.18 REMOVE TYPE "A", "B", "S" OR "T" SERIES FOUNDATION	1.00	EACH	100	00	100	00
242	T-1.20 REMOVE TYPE "M" SERIES FOUNDATION	2.00	EACH	100	00	200	00
243	T-1.29 RAISE OR LOWER FOUNDATION TO GRADE	1.00	EACH	950	00	950	00
244	T-1.3 INSTALL TYPE "M2-5S" FOUNDATION	2.00	EACH	1,430	00	2,860	00

Department of Design and Construction

NEW YORK CITY DEPARTMENT OF DESIGN AND CONSTRUCTION
DIVISION OF INFRASTRUCTURE - BUREAU OF DESIGN

PROJECT ID: BED798
CONTRACT PIN: 8502017WM0008C

12/29/2016 2:29 PM

BID SCHEDULE FORM

COL 1 SEQ. NO.	COL 2 ITEM NUMBER and DESCRIPTION	COL 3 ENGINEER'S ESTIMATE OF QUANTITY	COL 4 UNIT	COL 5 UNIT PRICE (IN FIGURES) DOLLARS	CTS	COL 6 EXTENDED AMOUNT (IN FIGURES) DOLLARS	CTS
245	T-2.1 INSTALL TYPE "S-1" OR "T-1" SERIES POST	1.00	EACH	470	00	470	00
246	T-2.16 FURNISH, INSTALL, MAINTAIN AND REMOVE TEMPORARY POST OR PYLON WITH SIGNALS	1.00	EACH	1,520	00	1,520	00
247	T-2.22 REMOVE TYPE "S-1" OR "T-1" SERIES POST	1.00	EACH	470	00	470	00
248	T-2.24 REMOVE TYPE "M" SERIES POST	2.00	EACH	1,170	00	2,340	00
249	T-2.4 INSTALL TYPE "M-2" POST	2.00	EACH	2,350	00	4,700	00
250	T-20000 FURNISH TEN FOOT ALUMINUM SIGNAL POST TYPE "S-1"	1.00	EACH	1,030	00	1,030	00

Department of Design and Construction

NEW YORK CITY DEPARTMENT OF DESIGN AND CONSTRUCTION
DIVISION OF INFRASTRUCTURE - BUREAU OF DESIGN

PROJECT ID: BED798
CONTRACT PIN: 8502017WM0008C

12/29/2016 2:29 PM

BID SCHEDULE FORM

COL. 1 SEQ. NO.	COL. 2 ITEM NUMBER AND DESCRIPTION	COL. 3 ENGINEER'S ESTIMATE OF QUANTITY	COL. 4 UNIT	COL. 5 UNIT PRICE (IN FIGURES) DOLLARS	CTS	COL. 6 EXTENDED AMOUNT (IN FIGURES) DOLLARS	CTS
251	T-20020 a) FURNISH 3/4" ANCHOR BOLT ASSEMBLIES FOR S-1 (EACH) (3 REQUIRED PER POST)	3.00	EACH	31	00	93	00
252	T-20160 FURNISH 20 FOOT SIGNAL MAST ARM POLE ASSEMBLY TYPE "M-2"	2.00	EACH	5,780	00	11,560	00
253	T-20220 c) FURNISH 1-1/4" ANCHOR BOLT ASSEMBLIES FOR M-2 (EACH) (4 REQUIRED PER POST)	8.00	EACH	70	00	560	00
254	T-3.1 INSTALL "ONE-WAY" SIGNAL UNIT ON MAST ARM OR TOP OF TRAFFIC POST	5.00	EACH	350	00	1,750	00
255	T-3.18 REMOVE SIGNAL HEAD FROM ANY TYPE POST	3.00	EACH	290	00	870	00
256	T-3.2 INSTALL "ONE-WAY" SIGNAL UNIT ON THE SHAFT OF ANY POST	1.00	EACH	380	00	380	00

Department of Design and Construction

NEW YORK CITY DEPARTMENT OF DESIGN AND CONSTRUCTION
DIVISION OF INFRASTRUCTURE - BUREAU OF DESIGN

PROJECT ID: BED798
CONTRACT PIN: 8502017WM0008C

12/29/2016 2:29 PM

BID SCHEDULE FORM

COL. 1 SEQ. No.	COL. 2 ITEM NUMBER and DESCRIPTION	COL. 3 ENGINEER'S ESTIMATE OF QUANTITY	COL. 4 UNIT	COL. 5 UNIT PRICE (IN FIGURES) DOLLARS	CTS.	COL. 6 EXTENDED AMOUNT (IN FIGURES) DOLLARS	CTS.
257	T-3.21 REMOVE PEDESTRIAN SIGNAL OR SIGN UNIT OR OTHER ILLUMINATED SIGNS FROM ANY POST	8.00	EACH	230	00	1,840	00
258	T-3.6 INSTALL PEDESTRIAN SIGNAL ON ANY TYPE POST	8.00	EACH	300	00	2,400	00
259	T-30013L FURNISH ADJUSTABLE 3 SECTION 1-WAY, DIE CAST ALUMINUM TRAFFIC SIGNALS 8" - W/LED LENS	6.00	EACH	470	00	2,820	00
260	T-31200 e) "VB" ASSEMBLY *ASSEMBLY IS EQUAL TO ONE PAIR	1.00	EACH	90	00	90	00
261	T-31210 h) "HUB" ASSEMBLY *ASSEMBLY IS EQUAL TO ONE PAIR	5.00	EACH	36	00	180	00
262	T-31215 b) "2MS"	1.00	EACH	260	00	260	00

Department of Design and Construction

NEW YORK CITY DEPARTMENT OF DESIGN AND CONSTRUCTION
DIVISION OF INFRASTRUCTURE - BUREAU OF DESIGN

PROJECT ID: BED798
CONTRACT PIN: 8502017WM0008C

12/29/2016 2:29 PM

BID SCHEDULE FORM

COL 1 SEQ. NO.	COL 2 ITEM NUMBER AND DESCRIPTION	COL 3 ENGINEER'S ESTIMATE OF QUANTITY	COL 4 UNIT	COL 5 UNIT PRICE (IN FIGURES) DOLLARS	CTS	COL 6 EXTENDED AMOUNT (IN FIGURES) DOLLARS	CTS
263	T-31225 c) "3MS"	1.00	EACH	310	00	310	00
264	T-31351 g) "VB-2P" ASSEMBLY *ASSEMBLY IS EQUAL TO ONE PAIR	4.00	EACH	280	00	1,120	00
265	T-33000L FURNISH POLYCARBONATE INCANDESCENT PED SIGNAL W/LED LENS	4.00	EACH	580	00	2,320	00
266	T-33001-L FURNISH POLYCARBONATE PEDESTRIAN SIGNAL (16 X 16) W/LED COUNT LENS (SPECIFICATION A-L)	4.00	EACH	640	00	2,560	00
267	T-4.22 INSTALL ANY TYPE OF ADVANCED SOLID STATE TRAFFIC SIGNAL CONTROLLER AND CABINET ON METAL POLE	1.00	EACH	1,530	00	1,530	00
268	T-4.23 INSTALL BATTERY BACK-UP POWER SUPPLY SYSTEM ON ANY POST	1.00	EACH	1,300	00	1,300	00

Department of Design and Construction

NEW YORK CITY DEPARTMENT OF DESIGN AND CONSTRUCTION
DIVISION OF INFRASTRUCTURE - BUREAU OF DESIGN

PROJECT ID: BED798
CONTRACT PIN: 8502017WM0008C

12/29/2016 2:29 PM

BID SCHEDULE FORM

COL. 1 SEQ. No.	COL. 2 ITEM NUMBER AND DESCRIPTION	COL. 3 ENGINEER'S ESTIMATE OF QUANTITY	COL. 4 UNIT	COL. 5 UNIT PRICE (IN FIGURES) DOLLARS	CTS	COL. 6 EXTENDED AMOUNT (IN FIGURES) DOLLARS	CTS
269	T-4.8 REMOVE ONE CONTROL BOX AND CONTROLLER FROM ANY POST OR SUPPORT	1.00	EACH	950	00	950	00
270	T-4.9 REMOVE CONTROL BOX FROM ANY POST OR SUPPORT	1.00	EACH	950	00	950	00
271	T-5.32 RESTORING PERMANENT ROADWAY (INCLUDING SAWCUT)	370.00	L.F.	0	10	37	00
272	T-5.50 FURNISH AND INSTALL 2" HDPE UNDERGROUND CONDUIT IN PAVED ROADWAY	370.00	L.F.	200	00	74,000	00
273	T-6.1 INSTALL CABLE (INCLUDES OVERHEAD)	3,000.00	L.F.	7	00	21,000	00
274	T-6.10 REMOVE CABLE (INCLUDES OVERHEAD)	3,000.00	L.F.	6	00	18,000	00

Department of Design and Construction

NEW YORK CITY DEPARTMENT OF DESIGN AND CONSTRUCTION
DIVISION OF INFRASTRUCTURE - BUREAU OF DESIGN

PROJECT ID: BED798
CONTRACT PIN: 8502017WM0008C

12/29/2016 2:29 PM

BID SCHEDULE FORM

COL. 1 SEQ. NO.	COL. 2 ITEM NUMBER and DESCRIPTION	COL. 3 ENGINEER'S ESTIMATE OF QUANTITY	COL. 4 UNIT	COL. 5 UNIT PRICE (IN FIGURES) DOLLARS	CTS.	COL. 6 EXTENDED AMOUNT (IN FIGURES) DOLLARS	CTS.
275	T-6.2 INSTALL MULTIPLE CABLE (INCLUDES OVERHEAD)	2,000.00	L.F.	9	50	19,000	00
276	T-60000B FURNISH 2 c # 10B (BREAKDOWN = 2#10 WITH 3RD WIRE FOR GROUNDING).	1,500.00	L.F.	3	00	4,500	00
277	T-60040 c) 7 CONDUCTOR, 14 A.W.G.	1,000.00	L.F.	2	50	2,500	00
278	T-60190 e) 13 CONDUCTOR, 14 A.W.G.	3,000.00	L.F.	3	50	10,500	00
279	T-7.53 REMOVE (2418) HAND BOX OR PULL BOX IN PAVED SIDEWALK	1.00	EACH	100	00	100	00
280	T-8.10 RELOCATE CONCRETE PYLON WITH POST	2.00	EACH	1,190	00	2,380	00

Department of Design and Construction

NEW YORK CITY DEPARTMENT OF DESIGN AND CONSTRUCTION
DIVISION OF INFRASTRUCTURE - BUREAU OF DESIGN

PROJECT ID: BED798
CONTRACT PIN: 8502017WM0008C

12/29/2016 2:29 PM

BID SCHEDULE FORM

COL. 1 SEQ. NO.	COL. 2 ITEM NUMBER and DESCRIPTION	COL. 3 ENGINEER'S ESTIMATE OF QUANTITY	COL. 4 UNIT	COL. 5 UNIT PRICE (IN FIGURES) DOLLARS	CTS.	COL. 6 EXTENDED AMOUNT (IN FIGURES) DOLLARS	CTS.
281	T-8.8 INSTALL CONCRETE PYLON	2.00	EACH	980	00	1,960	00
282	T-8.9 REMOVE CONCRETE PYLON	2.00	EACH	510	00	1,020	00
283	T-81000 FURNISH CONCRETE PYLON	2.00	EACH	1,240	00	2,480	00
284	UTL-6.01.1 GAS MAIN CROSSING SEWER UP TO 24" IN DIAMETER (S6.01) **Unit price bid shall not be less than: $ 1,040.00**	4.00	EACH	1,040	00	4,160	00
285	UTL-6.01.14 GAS MAIN CROSSING WATER MAIN 72" IN DIAMETER (S6.01) **Unit price bid shall not be less than: $ 1,155.00**	11.00	EACH	1,155	00	12,705	00
286	UTL-6.01.2 GAS MAIN CROSSING SEWER 30" IN DIAMETER (S6.01) **Unit price bid shall not be less than: $ 1,770.00**	2.00	EACH	1,770	00	3,540	00

Department of Design and Construction

NEW YORK CITY DEPARTMENT OF DESIGN AND CONSTRUCTION
DIVISION OF INFRASTRUCTURE - BUREAU OF DESIGN

PROJECT ID: BED798
CONTRACT PIN: 8502017WM0008C

12/29/2016 2:29 PM

BID SCHEDULE FORM

COL 1 SEQ. No.	COL 2 ITEM NUMBER and DESCRIPTION	COL 3 ENGINEER'S ESTIMATE OF QUANTITY	COL 4 UNIT	COL 5 UNIT PRICE (IN FIGURES) DOLLARS	CTS	COL 6 EXTENDED AMOUNT (IN FIGURES) DOLLARS	CTS
287	UTL-6.01.4 GAS MAIN CROSSING SEWER 48" THRU 54" IN DIAMETER (S6.01) **Unit price bid shall not be less than: $ 2,120.00**	1.00	EACH	2,120	00	2,120	00
288	UTL-6.01.4Q GAS MAIN CROSSING 4'-0"W X 5'-0"H FLAT TOP REINFORCED CONCRETE COMBINED SEWER (S6.01) **Unit price bid shall not be less than: $ 2,300.00**	2.00	EACH	2,300	00	4,600	00
289	UTL-6.01.4R GAS MAIN CROSSING 4'-6"W X 5'-0"H FLAT TOP REINFORCED CONCRETE COMBINED SEWER (S6.01) **Unit price bid shall not be less than: $ 2,300.00**	1.00	EACH	2,300	00	2,300	00
290	UTL-6.01.8 GAS SERVICES CROSSING TRENCHES AND/OR EXCAVATIONS (S6.01) **Unit price bid shall not be less than: $ 465.00**	210.00	EACH	465	00	97,650	00
291	UTL-6.01.9 GAS MAIN CROSSING WATER MAIN UP TO 20" IN DIAMETER (S6.01) **Unit price bid shall not be less than: $ 485.00**	13.00	EACH	485	00	6,305	00
292	UTL-6.03 REMOVAL OF ABANDONED GAS FACILITIES. ALL SIZES. (S6.03) **Unit price bid shall not be less than: $ 15.00**	7,500.00	L.F.	15	00	112,500	00

Department of Design and Construction

NEW YORK CITY DEPARTMENT OF DESIGN AND CONSTRUCTION
DIVISION OF INFRASTRUCTURE - BUREAU OF DESIGN

PROJECT ID: BED798
CONTRACT PIN: 8502017WM0008C

12/29/2016 2:29 PM

BID SCHEDULE FORM

COL. 1 SEQ. NO.	COL. 2 ITEM NUMBER and DESCRIPTION	COL. 3 ENGINEER'S ESTIMATE OF QUANTITY	COL. 4 UNIT	COL. 5 UNIT PRICE (IN FIGURES) DOLLARS	CTS.	COL. 6 EXTENDED AMOUNT (IN FIGURES) DOLLARS	CTS.
293	UTL-6.03.1 REMOVAL OF ABANDONED GAS FACILITIES WITH POSSIBLE COAL TAR WRAP. ALL SIZES. (FOR NATIONAL GRID WORK ONLY) (S6.03) **Unit price bid shall not be less than: $ 25.00**	400.00	L.F.	25	00	10,000	00
294	UTL-6.04 ADJUST HARDWARE TO GRADE USING SPACER RINGS/ADAPTORS. (STREET REPAVING.) (S6.04) **Unit price bid shall not be less than: $ 35.00**	25.00	EACH	35	00	875	00
295	UTL-6.05 ADJUST HARDWARE TO GRADE BY RESETTING. (ROAD RECONSTRUCTION.) (S6.05) **Unit price bid shall not be less than: $ 65.00**	40.00	EACH	65	00	2,600	00
296	UTL-6.06 SPECIAL CARE EXCAVATION AND BACKFILLING (S6.06) **Unit price bid shall not be less than: $ 180.00**	4,500.00	C.Y.	180	00	810,000	00
297	UTL-6.07 TEST PITS FOR GAS FACILITIES (S6.07) **Unit price bid shall not be less than: $ 100.00**	100.00	C.Y.	400	00	40,000	00

Department of Design and Construction

12/29/2016 2:29 PM

NEW YORK CITY DEPARTMENT OF DESIGN AND CONSTRUCTION
DIVISION OF INFRASTRUCTURE - BUREAU OF DESIGN

PROJECT ID: BED798
CONTRACT PIN: 8502017WM0008C

BID SCHEDULE FORM

COL. 1 SEQ. NO.	COL. 2 ITEM NUMBER and DESCRIPTION	COL. 3 ENGINEER'S ESTIMATE OF QUANTITY	COL. 4 UNIT	COL. 5 UNIT PRICE (IN FIGURES) DOLLARS	CTS	COL. 6 EXTENDED AMOUNT (IN FIGURES) DOLLARS	CTS
298	UTL-GCS-2WS GAS INTERFERENCES AND ACCOMMODATIONS PRICE BID SHALL BE FOR THE FIXED SUM OF $ 100,000.00	1.00	F.S.	100,000	00	$100,000	00

SUB-TOTAL: $ ~~36,103,930.36~~ VN
35,992,930.36 7/13/17

299	6.39 A MOBILIZATION BID PRICE OF MOBILIZATION SHALL NOT EXCEED 4% OF THE ABOVE SUB-TOTAL PRICE.	1.00	L.S.	~~1,444,157~~ 1,439,717 VN 7/13/17	~~21~~ 21	~~1,444,157~~ 1,439,717	~~21~~ 21

VN 7/13/17

TOTAL BID PRICE: $ ~~37,548,087.57~~ VN
37,432,647.57 7/13/17

PLEASE BE SURE A LEGIBLE BID IS ENTERED FOR EACH ITEM.
THE BIDDER SHALL INSERT THE TOTAL BID PRICE IN
THE BID FORM ON PAGE C-4 OF THIS BID BOOKLET.

Department of Design and Construction

NEW YORK CITY DEPARTMENT OF DESIGN AND CONSTRUCTION
DIVISION OF INFRASTRUCTURE - BUREAU OF DESIGN

PROJECT ID: BED798
CONTRACT PIN: 8502017WM0008C

12/29/2016 2:29 PM

BID SCHEDULE FORM

COL. 1 SEQ. NO.	COL. 2 ITEM NUMBER AND DESCRIPTION	COL. 3 ENGINEER'S ESTIMATE OF QUANTITY	COL. 4 UNIT	COL. 5 UNIT PRICE (IN FIGURES) DOLLARS	CTS.	COL. 6 EXTENDED AMOUNT (IN FIGURES) DOLLARS	CTS.
298	UTL-GCS-2WS GAS INTERFERENCES AND ACCOMMODATIONS PRICE BID SHALL BE FOR THE FIXED SUM OF $ 100,000.00	1.00	F.S.	100,000	00	$100,000	00

SUB-TOTAL: $ 36,103,930.36

299	6.39 A MOBILIZATION BID PRICE OF MOBILIZATION SHALL NOT EXCEED 4% OF THE ABOVE SUB-TOTAL PRICE.	1.00	L.S.	1,444,157	21	1,444,157	21

TOTAL BID PRICE: $ 37,548,087.57

PLEASE BE SURE A LEGIBLE BID IS ENTERED FOR EACH ITEM.
THE BIDDER SHALL INSERT THE TOTAL BID PRICE IN
THE BID FORM ON PAGE C-4 OF THIS BID BOOKLET.

BID FORM
THE CITY OF NEW YORK
DEPARTMENT OF DESIGN AND CONSTRUCTION
DIVISION OF INFRASTRUCTURE

BID FOR FURNISHING ALL LABOR AND MATERIAL NECESSARY AND REQUIRED FOR:

PROJECT ID: BED798

REPLACEMENT OF TRUNK AND DISTRIBUTION WATER MAINS, COMBINED SEWER AND APPURTENANCES IN FLATBUSH AVENUE BETWEEN STERLING PLACE AND 8TH AVENUE, ETC.

INCLUDING SEWER, WATER MAIN, 8TH AVENUE TRIANGLE STREETSCAPE, NECKDOWNS, STREET LIGHTING, AND TRAFFIC SIGNAL WORK

Together With All Work Incidental Thereto
BOROUGH OF BROOKLYN

Name of Bidder: Triumph Const. Corp.

Date of Bid Opening: 3/7/17

Bidder is: (Check one, whichever applies) Individual ( ) Partnership ( ) Corporation (✓)

Place of Business of Bidder: 1354 Seneca ave Bronx NY 10474

Bidder's Telephone Number: 718-861-6060 Fax Number: 718-861-6060

Bidder's E-Mail Address: DCuzzi@TriumphConstCorp.Com

Residence of Bidder (If Individual): _____

If Bidder is a Partnership, fill in the following blanks:

Names of Partners	Residence of Partners

If Bidder is a Corporation, fill in the following blanks:

Organized under the laws of the State of New York

Name and Home Address of President: 45 Winchester ave
New Rochelle NY 10805

Name and Home Address of Secretary: _____

Name and Home Address of Treasurer: _____

BID FORM

Triumph Const. Corp.

The above-named Bidder affirms and declares:

1. The said bidder is of lawful age and the only one interested in this bid; and no person, firm or corporation other than hereinbefore named has any interest in this bid, or in the Contract proposed to be taken.

2. By submission of this bid, each bidder and each person signing on behalf of any bidder certifies, and in the case of a joint bid each party thereto certifies as to its own organization, under penalty of perjury, that to the best of its knowledge and belief: (1) the prices in this bid have been arrived at independently without collusion, consultation, communication or agreement, for the purpose of restricting competition, as to any matter relating to such prices with any other bidder or with any competitor; (2) unless otherwise required by law, the prices quoted in this bid have not been knowingly disclosed by the bidder and will not knowingly be disclosed by the bidder prior to opening, directly or indirectly, to any other bidder or to any competitor; and (3) No attempt has been made or will be made by the bidder to induce any other person, partnership or corporation to submit or not to submit a bid for the purpose of restricting competition.

3. No councilman or other officer or employee or person whose salary is payable in whole or in part from the City Treasury is directly or indirectly interested in this bid, or in the supplies, materials, equipment, work or labor to which it relates, or in any of the profits thereof.

4. The bidder is not in arrears to the City of New York upon debt or contract or taxes, and is not a defaulter, as surety or otherwise, upon any obligation of the City of New York, and has not been declared not responsible, or disqualified, by any agency of the City of New York or State of New York, nor is there any proceeding pending relating to the responsibility or qualification of the bidder to receive public contracts except as set forth on the Affirmation included as page C-6 of this Bid Booklet.

The bidder hereby affirms that it has paid all applicable City income, excise and other taxes for all years it has conducted business activities in New York City.

5. The bidder, as an individual, or as a member, partner, director or officer of the bidder, if the same be a firm, partnership or corporation, executes this document expressly warranting and representing that should this bid be accepted by the City and the Contract awarded to him, he and his subcontractors engaged in the performance: (1) will comply with the provisions of Section 6-108 of the Administrative Code of the City of New York and the non-discrimination provisions of Section 220a of the New York State Labor Law, as more expressly and in detail set forth in the Agreement; (2) will comply with Section 6-109 of the Administrative Code of the City of New York in relation to minimum wages and other stipulations as more expressly and in detail set forth in the Agreement; (3) have complied with the provisions of the aforesaid laws since their respective effective dates, and (4) will post notices to be furnished by the City, setting forth the requirements of the aforesaid laws in prominent and conspicuous places in each and every plant, factory, building and structure where employees engaged in the performance of the Contract can readily view it, and will continue to keep such notices posted until the supplies, materials and equipment, or work labor and services required to be furnished or rendered by the Contractor have been finally accepted by the City. In the event of any breach or violation of the foregoing, the Contractor may be subject to damages, liquidated or otherwise, cancellation of the Contract and suspension as a bidder for a period of three years. (The words, "the bidder", "he", "his", and "him" where used herein shall mean the individual bidder, firm, partnership or corporation executing the bid).

6. Compliance Report

The bidder, as an individual, or as a member, partner, director, or officer of the bidder, if the same be a firm, partnership, or corporation, (1) represents that his attention has been specifically drawn to Executive Order No. 50, dated, April 25, 1980, on Equal Employment Compliance of the contract, and (2) warrants that he will comply with the provisions of Executive Order No. 50. The Employment Report must be submitted as part of the bid.

The bidder, as an individual, or as a member, partner, director, or officer of the bidder, if the same be a firm, partnership, or corporation, executes this document expressly warranting that he will comply with: (1) the provision of the contract on providing records, Chapter 8.

7. By submission of this bid, the bidder certifies that it now has and will continue to have the financial capability to fully perform the work required for this contract. Any award of this contract will be made in reliance upon such certification. Upon request therefor, the bidder will submit written verification of such financial capability in a form that is acceptable to the department.

8. In accordance with Section 165 of the State Finance Law, the bidder agrees that tropical hardwoods, as defined in Section 165 of the State Finance Law, shall not be utilized in the performance of this Contract, except as the same are permitted by the foregoing provision of law.

9. The bidder has visited and examined the site of the work and has carefully examined the Contract in the form approved by the Corporation Counsel, and will execute the Contract and perform all its items, covenants and conditions, and will provide, furnish and deliver all the work, materials, supplies, tools and appliances for all labor and materials necessary or required for the hereinafter named work, all in strict conformity with the Contract, for the prices set forth in the Bid Schedule:

10. M/WBE UTILIZATION PLAN: By signing its bid, the bidder agrees to the Vendor Certification and Required Affirmations set forth below, unless a full waiver of the Participation Goals is granted. The Vendor Certification and Required Affirmations will be deemed to satisfy the requirement to complete Section V of Part II of Schedule B: M/WBE Utilization Plan.

Section V: Vendor Certification and Required Affirmations:

I hereby:

1) acknowledge my understanding of the M/WBE participation requirements as set forth in this Contract and the pertinent provisions of Section 6-129 of the Administrative Code of the City of New York and the rules promulgated thereunder;
2) affirm that the information supplied in support of the M/WBE Utilization Plan is true and correct;
3) agree, if awarded this Contract, to comply with the M/WBE participation requirements of this Contract, the pertinent provisions of Section 6-129, and the rules promulgated thereunder, all of which shall be deemed to be material terms of this Contract;
4) agree and affirm that it is a material term of this Contract that the Vendor will award the total dollar value of the M/WBE Participation Goals to certified MBEs and/or WBEs, unless a full waiver is obtained or such goals are modified by the Agency; and
5) agree and affirm, if awarded this Contract, to make all reasonable, good faith efforts to meet the M/WBE Participation Goals, or If a partial waiver is obtained or such goals are modified by the Agency, to meet the modified Participation Goals by soliciting and obtaining the participation of certified MBE and/or WBE firms.

(NO TEXT ON THIS PAGE)

BID FORM

PROJECT ID: BED798

TOTAL BID PRICE: In the space provided below, the Bidder shall indicate its Total Bid Price in figures. Such Total Bid Price is set forth on the final page of the Bid Schedule.

37,432,647.57 VN 07/13/17

TOTAL BID PRICE:
(a/k/a BID PROPOSAL)

$ ~~37,548,087.57~~
BB 3/7/17

BIDDER'S SIGNATURE AND AFFIDAVIT

Bidder: Triumph Const. Corp

By: _____
(Signature of Partner or corporate officer)

_____

Attest:
(Corporate Seal)

Secretary of Corporate Bidder

Affidavit on the following page should be subscribed
and sworn to before a Notary Public

BID FORM

PROJECT ID: BED798

TOTAL BID PRICE: In the space provided below, the Bidder shall indicate its Total Bid Price in figures. Such Total Bid Price is set forth on the final page of the Bid Schedule.

TOTAL BID PRICE:
(a/k/a BID PROPOSAL)

$ 37,548,087.57
BB 3/7/17

BIDDER'S SIGNATURE AND AFFIDAVIT

Bidder: Triumph Const. Corp

By: _____
(Signature of Partner or corporate officer)

Attest:
(Corporate Seal)

Secretary of Corporate Bidder

Affidavit on the following page should be subscribed
and sworn to before a Notary Public

BID FORM (TO BE NOTARIZED)

AFFIDAVIT WHERE BIDDER IS AN INDIVIDUAL

STATE OF NEW YORK, COUNTY OF _____ ss:

_____ being duly sworn says:

I am the person described in and who executed the foregoing bid, and the several matters therein stated are in all respects true.

_____
(Signature of the person who signed the Bid)

Subscribed and sworn to before me this
_____ day of _____, _____

_____
Notary Public

AFFIDAVIT WHERE BIDDER IS A PARTNERSHIP

STATE OF NEW YORK, COUNTY OF _____ ss:

_____ being duly sworn says:

I am a member of _____ the firm described in and which executed the foregoing bid. I subscribed the name of the firm thereto on behalf of the firm, and the several matters therein stated are in all respects true.

_____
(Signature of Partner who signed the Bid)

Subscribed and sworn to before me this
_____ day of _____, _____

_____
Notary Public

AFFIDAVIT WHERE BIDDER IS A CORPORATION

STATE OF NEW YORK, COUNTY OF Bronx ss:

Carlo Ozzi being duly sworn says:

I am the President of the above named corporation whose name is subscribed to and which executed the foregoing bid. I reside at 45 Winchester Oval New Rochelle NY 10805

I have knowledge of the several matters therein stated, and they are in all respects true.

_____
(Signature of Partner who signed the Bid)

Subscribed and sworn to before me this
7th day of March, 2017

_____
Notary Public

SHIRLEY JACOBS
NOTARY PUBLIC-STATE OF NEW YORK
No. 01JA6078625
Qualified in Westchester County
My Commission Expires 08-05-2018

AFFIRMATION

PROJECT ID: BED798

The undersigned bidder affirms and declares that said bidder is not in arrears to the City of New York upon debt, contract or taxes and is not a defaulter, as surety or otherwise, upon obligation to the City of New York, and has not been declared not responsible, or disqualified, by any agency of the City of New York, nor is there any proceeding pending relating to the responsibility or qualification of the bidder to receive public contracts except:

None

(If none, the bidder shall insert the word "None" in the space provided above.)

Full Name of Bidder: Triumph Const Corp.
Address: 1354 Seneca Ave
City Bronx State New York Zip Code ~~10805~~ 10474

CHECK ONE BOX AND INCLUDE APPROPRIATE NUMBER:

/ / A - Individual or Sole Proprietorship*
SOCIAL SECURITY NUMBER

/ / B - Partnership, Joint Venture or other unincorporated organization
EMPLOYER IDENTIFICATION NUMBER

/✓/ C- Corporation
EMPLOYER IDENTIFICATION NUMBER
134050635

By: _____
Signature

Title: Pres

If a corporation, place seal here

This affirmation must be signed by an officer or duly authorized representative.

*Under the Federal Privacy Act the furnishing of Social Security Numbers by bidders on City contracts is voluntary. Failure to provide a Social Security Number will not result in a bidder's disqualification. Social Security Numbers will be used to identify bidders, proposers or vendors to ensure their compliance with laws, to assist the City in enforcement of laws, as well as to provide the City a means of identifying of businesses which seek City contracts.

Tax ID #: 134050635

APT E-PIN #: 85017B0076

SCHEDULE B – M/WBE Utilization Plan
Part I: M/WBE Participation Goals

Part I to be completed by contracting agency

Contract Overview

APT E- Pin #	85017B0076	**FMS Project ID#:**	BED798
Project Title/ Agency PIN #	REPLACEMENT OF TRUNK DISTRIBUTION WATER MAINS, COMBINED SEWER AND APPURTENANCES/ 8502017WM0008C		
Bid/Proposal Response Date	MARCH 7, 2017		
Contracting Agency	Department of Design and Construction		
Agency Address	30-30 Thomson Avenue City Long Island City State NY Zip Code 11101		
Contact Person	Emmanual K. Charles	**Title**	MWBE Compliance Analyst
Telephone #	718-391-1450	**Email**	charlesem@ddc.nyc.gov

Project Description *(attach additional pages if necessary)*

PROJECT ID: BED798

REPLACEMENT OF TRUNK AND DISTRIBUTION WATER MAINS, COMBINED SEWER AND APPURTENANCES IN FLATBUSH AVENUE BETWEEN STERLING PLACE AND 8TH AVENUE, ETC.

INCLUDING SEWER, WATER MAIN, 8TH AVENUE TRIANGLE STREETSCAPE, NECKDOWNS, STREET LIGHTING, AND TRAFFIC SIGNAL WORK

Together With All Work Incidental Thereto
BOROUGH OF BROOKLYN
CITY OF NEW YORK

M/WBE Participation Goals for Services
Enter the percentage amount for each group or for an unspecified goal. Please note that there are no goals for Asian Americans in Professional Services.

Prime Contract Industry: Construction

Group	Percentage	
Unspecified*	**9%**	
or		
Black American	**UNSPECIFIED***	
Hispanic American	**UNSPECIFIED***	
Asian American	**UNSPECIFIED***	
Women	**UNSPECIFIED***	
Total Participation Goals	**9%**	**Line 1**

**Note: For this procurement, individual ethnicity and gender goals are not specified. The Total Participation Goal for construction contracts may be met by using either Black-American, Hispanic-American, Asian American, or Women certified firms or any combination of such firms.*

Tax ID #: 134050635

APT E-
PIN #: 85017B0076

SCHEDULE B - Part II: M/WBE Participation Plan

Part II to be completed by the bidder/proposer.
Please note: For Non-M/WBE Prime Contractors who will NOT subcontract any services and will self-perform the entire contract, you must obtain a FULL waiver by completing the Waiver Application on pages 17 and 18 and timely submitting it to the contracting agency pursuant to the Notice to Prospective Contractors. Once a FULL WAIVER is granted, it must be included with your bid or proposal and you do not have to complete or submit this form with your bid or proposal.

Section I: Prime Contractor Contact Information

Tax ID #	134050635	**FMS Vendor ID #**	
Business Name	Triumph Const. Corp.	**Contact Person**	Dominick Cozzi
Address	1354 Seneca ave Bronx NY 10474		
Telephone #		**Email**	

Section II: M/WBE Utilization Goal Calculation: Check the applicable box and complete subsection.

PRIME CONTRACTOR ADOPTING AGENCY M/WBE PARTICIPATION GOALS

☑ **For Prime Contractors (including Qualified Joint Ventures and M/WBE firms) adopting Agency M/WBE Participation Goals.**	**Total Bid/Proposal Value**		**Agency Total Participation Goals (Line 1, Page 13)**		**Calculated M/WBE Participation Amount**
Calculate the total dollar value of your total bid that you agree will be awarded to M/WBE subcontractors for services and/or credited to an M/WBE prime contractor or Qualified Joint Venture. Please review the Notice to Prospective Contractors for more information on how to obtain credit for M/WBE participation.	$ 37,548,087.57	X	9%	=	$ 3,379,327.88 Line 2

PRIME CONTRACTOR OBTAINED PARTIAL WAIVER APPROVAL: ADOPTING MODIFIED M/WBE PARTICIPATION GOALS

☐ **For Prime Contractors (including Qualified Joint Ventures and M/WBE firms) adopting Modified M/WBE Participation Goals.**	**Total Bid/Proposal Value**		**Adjusted Participation Goal (From Partial Waiver)**		**Calculated M/WBE Participation Amount**
Calculate the total dollar value of your total bid that you agree will be awarded to M/WBE subcontractors for services and/or credited to an M/WBE prime contractor or Qualified Joint Venture. Please review the Notice to Prospective Contractors for more information on how to obtain credit for M/WBE participation.	$	X		=	$ Line 3

Tax ID #: 134050635

APT E-
PIN #: 85017B0076

Section III: M/WBE Utilization Plan: How Proposer/Bidder Will Fulfill M/WBE Participation Goals. Please review the Notice to Prospective Contractors for more information on how to obtain credit for M/WBE participation. Check applicable box. The Proposer or Bidder will fulfill the M/WBE Participation Goals:

☐ As an M/WBE Prime Contractor that will self-perform and/or subcontract to other M/WBE firms a portion of the contract the value of which is at least the amount located on Lines 2 or 3 above, as applicable. The value of any work subcontracted to non-M/WBE firms will not be credited towards fulfillment of M/WBE Participation Goals. Please check all that apply to Prime Contractor:

☐ MBE ☐ WBE

☐ As a Qualified Joint Venture with an M/WBE partner, in which the value of the M/WBE partner's participation and/or the value of any work subcontracted to other M/WBE firms is at least the amount located on Lines 2 or 3 above, as applicable. The value of any work subcontracted to non M/WBE firms will not be credited towards fulfillment of M/WBE Participation Goals.

☑ As a non M/WBE Prime Contractor that will enter into subcontracts with M/WBE firms the value of which is at least the amount located on Lines 2 or 3 above, as applicable.

Section IV: General Contract Information

What is the expected percentage of the total contract dollar value that you expect to award in subcontracts for services, regardless of M/WBE status? % 9%

✓ Scopes of Subcontract Work

Enter brief description of the type(s) and dollar value of subcontracts for all/any services you plan on subcontracting if awarded this contract. For each item, indicate whether the work is designated for participation by MBEs and/or WBEs and the time frame in which such work is scheduled to begin and end. Use additional sheets if necessary.

1. WBE Metrofab - 2,000,000 → Duration of
2. MBE Trucking - 1,400,000 → Contract.
3.
4.
5.
6.
7.
8.
9.
10.
11.
12.
13.
14.
15.
16.
17.

Tax ID #: 134050635

APT E-
PIN #: 85017B0076

Section V: Vendor Certification and Required Affirmations

I hereby:

1) acknowledge my understanding of the M/WBE participation requirements as set forth herein and the pertinent provisions of Section 6-129 of the Administrative Code of the City of New York ("Section 6-129"), and the rules promulgated thereunder;

2) affirm that the information supplied in support of this M/WBE Utilization Plan is true and correct;

3) agree, if awarded this Contract, to comply with the M/WBE participation requirements of this Contract, the pertinent provisions of Section 6-129, and the rules promulgated thereunder, all of which shall be deemed to be material terms of this Contract;

4) agree and affirm that it is a material term of this Contract that the Vendor will award the total dollar value of the M/WBE Participation Goals to certified MBEs and/or WBEs, unless a full waiver is obtained or such goals are modified by the Agency; and

5) agree and affirm, if awarded this Contract, to make all reasonable, good faith efforts to meet the M/WBE Participation Goals, or If a partial waiver is obtained or such goals are modified by the Agency, to meet the modified Participation Goals by soliciting and obtaining the participation of certified MBE and/or WBE firms.

Signature		**Date**	3/7/17
Print Name	Carlo Cuzzi	**Title**	President

BID BOND 1
FORM OF BID BOND

KNOW ALL MEN BY THESE PRESENTS. That we, Triumph Construction Corp.
1354 Seneca Avenue
Bronx, NY 10474

hereinafter referred to as the "Principal", and Liberty Mutual Insurance Company
1200 MacArthur Blvd., 3rd floor
Mahwah, NJ 07430

hereinafter referred to as the "Surety" are held and firmly bound to THE CITY OF NEW YORK, hereinafter referred to as the "CITY", or to its successors and assigns in the penal sum of

Ten Percent of the Amount Bid

($ 10%), Dollars lawful money of the United States, for the payment of which said sum of money well and truly to be made, we, and each of us, bind ourselves, our heirs, executors, administrators, successors and assigns, jointly and severally, firmly by these presents.

Whereas, the Principal is about to submit (or has submitted) to the City the accompanying proposal, hereby made a part hereof, to enter into a contract in writing for FMS Project ID#: BED798 -

Replacement of Trunk and Distribution Water Mains, Combined Sewer and Appurtenances in Flatbush Avenue Between Sterling Place and 8th Avenue, Etc. Including Sewer, Water Main, 8th Avenue Triangle Streetscape, Neckdowns, Street Lighting, and Traffic Signal Work Together With All Work Incidental Thereto Borough of Brooklyn, City of New York - PIN: 8502017WM0008C

NOW, THEREFORE, the conditions of this obligation are such that if the Principal shall not withdraw said Proposal without the consent of the City for a period of forty-five (45) days after the opening of bids and in the event of acceptance of the Principal's Proposal by the City, if the Principal shall:

(a) Within ten (10) days after notification by the City, execute in quadruplicate and deliver to the City all the executed counterparts of the Contract in the form set forth in the Contract Documents, in accordance with the proposal as accepted, and

(b) Furnish a performance bond and separate payment bond, as may be required by the City, for the faithful performance and proper fulfillment of such Contract, which bonds shall be satisfactory in all respects to the City and shall be executed by good and sufficient sureties, and

(c) In all respects perform the agreement created by the acceptance of said Proposal as provided in the Information for Bidders, bound herewith and made a part hereof, or if the City shall reject the aforesaid Proposal, then this obligation shall be null and void; otherwise to remain in full force and effect.

BID BOND 2

In the event that the Proposal of the Principal shall be accepted and the Contract be awarded to him the Surety hereunder agrees subject only to the payment by the Principal of the premium therefore, if requested by the City, to write the aforementioned performance and payment bonds in the form set forth in the Contract Documents.

It is expressly understood and agreed that the liability of the Surety for any and all claims hereunder shall in no event exceed the penal amount of this obligation as herein stated.

There shall be no liability under this bond if, in the event of the acceptance of the Principal's Proposal by the City, either a performance bond or payment bond, or both, shall not be required by the City on or before the 30th day after the date on which the City signs the Contract.

The surety, for the value received, hereby stipulates and agrees that the obligations of the Surety and its bond shall in no way be impaired or affected by any postponements of the date upon which the City will receive or open bids, or by any extensions of the time within which the City may accept the Principal's Proposal, or by any waiver by the City of any of the requirements of the Information for Bidders, and the Surety hereby waives notice of any such postponements, extensions, or waivers.

IN WITNESS WHEREOF, the Principal and the Surety have hereunto set their hands and seals and such of them as are corporations have caused their corporate seals to be hereto affixed and these presents to be signed by their proper officers the 7th day of March, 2017.

(Seal) Triumph Construction Corp. (L.S.)
Principal

By: _____

(Seal) Liberty Mutual Insurance Company
Surety

By: Cheryl R. Coleman
Cheryl R. Coleman, Attorney-in-Fact

Attorney in Fact

BID BOND 3

ACKNOWLEDGMENT OF PRINCIPAL, IF A CORPORATION

State of New York County of Bronx ss:
On this 7th day of March, 2017, before me personally came
Carlo Curci to me known, who, being by me duly sworn, did depose and say
that he resides at 45 Winchester Ave New Rochelle NY 10471
that he is the President. of Triumph Construction Corp.
the corporation described in and which executed the foregoing instrument; that he knows the seal of said corporation; that one of the seals affixed to said instrument is such seal; that it was so affixed by order of the directors of said corporation, and that he signed his name thereto by like order.

SHIRLEY JACOBS
NOTARY PUBLIC-STATE OF NEW YORK
No. 01JA6078625
Qualified in Westchester County
My Commission Expires 08-05-2018

Notary Public

ACKNOWLEDGMENT OF PRINCIPAL, IF A PARTNERSHIP

State of _____ County of _____ ss:
On this _____ day of _____, _____, before me personally appeared
_____ to me known and known to me to be one of the members of the
firm of _____ described in and who executed the foregoing
instrument, and he acknowledged to me that he executed the same as and for the act and deed of said
firm.

Notary Public

ACKNOWLEDGMENT OF PRINCIPAL, IF AN INDIVIDUAL

State of _____ County of _____ ss:
On this _____ day of _____, _____, before me personally appeared
_____ to me known and known to me to be the person described in
and who executed the foregoing instrument and acknowledged that he executed the same.

Notary Public

AFFIX ACKNOWLEDGMENTS AND JUSTIFICATION OF SURETIES

SURETY ACKNOWLEDGMENT

State of _____**New Jersey**_____

County of _____**Union**_____

On this **7th** _____ day of **March, 2017**

Before me personally came **Cheryl R. Coleman** to me known, who being by me duly sworn, did depose and say that he/she is an Attorney-in-Fact of **Liberty Mutual Insurance Company** the corporation described in and which executed the within instrument; that he/she knows the corporate seal of said corporation; that the seal affixed to the within instrument is such corporate seal, and that he/she signed the said instrument and affixed the said seal as Attorney-in-Fact by authority of the Board of Directors of said corporation and by authority of this office under the Standing Resolutions thereof.

JAMI A. KING
NOTARY PUBLIC OF NEW JERSEY
Comm. # 50045935
My Commission Expires 9/16/2021

My commission expires _____ _____

THIS POWER OF ATTORNEY IS NOT VALID UNLESS IT IS PRINTED ON RED BACKGROUND.
This Power of Attorney limits the acts of those named herein, and they have no authority to bind the Company except in the manner and to the extent herein stated.

Certificate No. 7573493

Liberty Mutual Insurance Company
The Ohio Casualty Insurance Company West American Insurance Company

POWER OF ATTORNEY

KNOWN ALL PERSONS BY THESE PRESENTS: That The Ohio Casualty Insurance Company is a corporation duly organized under the laws of the State of New Hampshire, that Liberty Mutual Insurance Company is a corporation duly organized under the laws of the State of Massachusetts, and West American Insurance Company is a corporation duly organized under the laws of the State of Indiana (herein collectively called the "Companies"), pursuant to and by authority herein set forth, does hereby name, constitute and appoint, Cheryl R. Coleman; Lisa A. Anderson; Marc J. Michalewsky; Mary J. D'Amato; Rachael Hurley; Sandra A. Pace; Thomas M. True

all of the city of Westfield, state of NJ each individually if there be more than one named, its true and lawful attorney-in-fact to make, execute, seal, acknowledge and deliver, for and on its behalf as surety and as its act and deed, any and all undertakings, bonds, recognizances and other surety obligations, in pursuance of these presents and shall be as binding upon the Companies as if they have been duly signed by the president and attested by the secretary of the Companies in their own proper persons.

IN WITNESS WHEREOF, this Power of Attorney has been subscribed by an authorized officer or official of the Companies and the corporate seals of the Companies have been affixed thereto this 16th day of December, 2016.

THE OHIO CASUALTY INSURANCE COMPANY INCORPORATED 1919 NEW HAMPSHIRE
LIBERTY MUTUAL INSURANCE COMPANY INCORPORATED 1912 MASSACHUSETTS
WEST AMERICAN INSURANCE COMPANY INCORPORATED 1991 INDIANA

The Ohio Casualty Insurance Company
Liberty Mutual Insurance Company
West American Insurance Company

By: David M. Carey
David M. Carey, Assistant Secretary

STATE OF PENNSYLVANIA ss
COUNTY OF MONTGOMERY

On this 16th day of December, 2016, before me personally appeared David M. Carey, who acknowledged himself to be the Assistant Secretary of Liberty Mutual Insurance Company, The Ohio Casualty Company, and West American Insurance Company, and that he, as such, being authorized so to do, execute the foregoing instrument for the purposes therein contained by signing on behalf of the corporations by himself as a duly authorized officer.

IN WITNESS WHEREOF, I have hereunto subscribed my name and affixed my notarial seal at King of Prussia, Pennsylvania, on the day and year first above written.

TERESA PASTELLA COMMONWEALTH OF PENNSYLVANIA NOTARY PUBLIC

COMMONWEALTH OF PENNSYLVANIA
Notarial Seal
Teresa Pastella, Notary Public
Upper Merion Twp., Montgomery County
My Commission Expires March 28, 2017
Member, Pennsylvania Association of Notaries

By: Teresa Pastella
Teresa Pastella, Notary Public

This Power of Attorney is made and executed pursuant to and by authority of the following By-laws and Authorizations of The Ohio Casualty Insurance Company, Liberty Mutual Insurance Company, and West American Insurance Company which resolutions are now in full force and effect reading as follows:

ARTICLE IV – OFFICERS – Section 12. Power of Attorney. Any officer or other official of the Corporation authorized for that purpose in writing by the Chairman or the President, and subject to such limitation as the Chairman or the President may prescribe, shall appoint such attorneys-in-fact, as may be necessary to act in behalf of the Corporation to make, execute, seal, acknowledge and deliver as surety any and all undertakings, bonds, recognizances and other surety obligations. Such attorneys-in-fact, subject to the limitations set forth in their respective powers of attorney, shall have full power to bind the Corporation by their signature and execution of any such instruments and to attach thereto the seal of the Corporation. When so executed, such instruments shall be as binding as if signed by the President and attested to by the Secretary. Any power or authority granted to any representative or attorney-in-fact under the provisions of this article may be revoked at any time by the Board, the Chairman, the President or by the officer or officers granting such power or authority.

ARTICLE XIII – Execution of Contracts – SECTION 5. Surety Bonds and Undertakings. Any officer of the Company authorized for that purpose in writing by the chairman or the president, and subject to such limitations as the chairman or the president may prescribe, shall appoint such attorneys-in-fact, as may be necessary to act in behalf of the Company to make, execute, seal, acknowledge and deliver as surety any and all undertakings, bonds, recognizances and other surety obligations. Such attorneys-in-fact subject to the limitations set forth in their respective powers of attorney, shall have full power to bind the Company by their signature and execution of any such instruments and to attach thereto the seal of the Company. When so executed such instruments shall be as binding as if signed by the president and attested by the secretary.

Certificate of Designation – The President of the Company, acting pursuant to the Bylaws of the Company, authorizes David M. Carey, Assistant Secretary to appoint such attorneys-in-fact as may be necessary to act on behalf of the Company to make, execute, seal, acknowledge and deliver as surety any and all undertakings, bonds, recognizances and other surety obligations.

Authorization – By unanimous consent of the Company's Board of Directors, the Company consents that facsimile or mechanically reproduced signature of any assistant secretary of the Company, wherever appearing upon a certified copy of any power of attorney issued by the Company in connection with surety bonds, shall be valid and binding upon the Company with the same force and effect as though manually affixed.

I, Renee C. Llewellyn, the undersigned, Assistant Secretary, The Ohio Casualty Insurance Company, Liberty Mutual Insurance Company, and West American Insurance Company do hereby certify that the original power of attorney of which the foregoing is a full, true and correct copy of the Power of Attorney executed by said Companies, is in full force and effect and has not been revoked.

IN TESTIMONY WHEREOF, I have hereunto set my hand and affixed the seals of said Companies this 7th day of March, 20 17.

THE OHIO CASUALTY INSURANCE COMPANY INCORPORATED 1919 NEW HAMPSHIRE
LIBERTY MUTUAL INSURANCE COMPANY INCORPORATED 1912 MASSACHUSETTS
WEST AMERICAN INSURANCE COMPANY INCORPORATED 1991 INDIANA

By: Renee Llewellyn
Renee C. Llewellyn, Assistant Secretary

Not valid for mortgage, note, letter of credit, currency rate, interest rate or residual value guarantees.

To confirm the validity of this Power of Attorney call 1-610-832-8240 between 9:00 am and 4:30 pm EST on any business day.

LMS_12873_082016

Liberty Mutual. SURETY

LIBERTY MUTUAL INSURANCE COMPANY

FINANCIAL STATEMENT — DECEMBER 31, 2015

Assets

Cash and Bank Deposits	$753,038,641
*Bonds — U.S Government	1,547,613,446
*Other Bonds	11,088,162,545
*Stocks	9,919,835,033
Real Estate	295,926,247
Agents' Balances or Uncollected Premiums	4,487,501,643
Accrued Interest and Rents	120,872,424
Other Admitted Assets	14,130,266,527
Total Admitted Assets	**$42,343,216,506**

Liabilities

Unearned Premiums		$6,580,520,311
Reserve for Claims and Claims Expense		16,917,138,677
Funds Held Under Reinsurance Treaties		210,794,503
Reserve for Dividends to Policyholders		358,033
Additional Statutory Reserve		29,659,093
Reserve for Commissions, Taxes and Other Liabilities		2,789,478,276
Total		**$26,527,948,893**
Special Surplus Funds	$67,890,944	
Capital Stock	10,000,000	
Paid in Surplus	8,829,183,823	
Unassigned Surplus	6,908,192,846	
Surplus to Policyholders		**15,815,267,613**
Total Liabilities and Surplus		**$42,343,216,506**

LIBERTY MUTUAL INSURANCE COMPANY INCORPORATED 1912 MASSACHUSETTS

* Bonds are stated at amortized or investment value; Stocks at Association Market Values.
The foregoing financial information is taken from Liberty Mutual Insurance Company's financial statement filed with the state of Massachusetts Department of Insurance.

I, TIM MIKOLAJEWSKI, Assistant Secretary of Liberty Mutual Insurance Company, do hereby certify that the foregoing is a true, and correct statement of the Assets and Liabilities of said Corporation, as of December 31, 2015, to the best of my knowledge and belief.

IN WITNESS WHEREOF, I have hereunto set my hand and affixed the seal of said Corporation at Seattle, Washington, this 15th day of March, 2016.

T A Mikolajewski

Assistant Secretary

S-1262LM/C/a 3/16

VENDEX COMPLIANCE

(A) **Vendex Fees:** Pursuant to Procurement Policy Board Rule 2-08(f)(2), the contractor will be charged a fee for the administration of the VENDEX system, including the Vendor Name Check process, if a Vendor Name Check review is required to be conducted by the Department of Investigation. The contractor shall also be required to pay the applicable required fees for any of its subcontractors for which Vendor Name Check reviews are required. The fee(s) will be deducted from payments made to the contractor under the contract. For contracts with an estimated value of less than or equal to $1,000,000, the fee will be $175 per Vendor Name Check review. For contracts with an estimated value of greater than $1,000,000, the fee will be $350 per Vendor Name Check review.

(B) **Confirmation of Vendex Compliance:** The Bidder shall submit this Confirmation of Vendex Compliance to the Department of Design and Construction, Contracts Section, 30-30 Thomson Avenue – First Floor, Long Island City, NY 11101.

Bid Information: The Bidder shall complete the bid information set forth below.

Name of Bidder: Triumph Const. Corp.
Bidder's Address: 1354 Seneca ave Bronx NY 10474
Bidder's Telephone Number: 718-561-6060
Bidder's Fax Number: 718-561-6660
Date of Bid Opening: 3/7/17
PROJECT ID: BED798

Vendex Compliance: To demonstrate compliance with Vendex requirements, the Bidder shall complete either Section (1) or Section (2) below, whichever applies.

(1) **Submission of Vendex Questionnaires to MOCS:** By signing in the space provided below, the Bidder certifies that as of the date specified below, the Bidder has submitted Vendex Questionnaires to the Mayor's Office of Contract Services, Attn: VENDEX, 253 Broadway, 9th Floor, New York, New York 10007.

Date of Submission: 5/19/16

By: _____
(Signature of Partner or corporate officer)

Print Name: Carlo Cuzzi

(2) **Submission of Certification of No Change to DDC:** By signing in the space provided below, the Bidder certifies that it has read the instructions in a "Vendor's Guide to Vendex" and that such instructions do not require the Bidder to submit Vendex Questionnaires. The Bidder has completed **TWO ORIGINALS** of the Certification of No Change set forth on the next page of this Bid Booklet.

By: _____
(Signature of Partner or corporate officer)

Print Name: Carlo Cuzzi

(NO TEXT ON THIS PAGE)

Certificate of No Change Form

NYC
Mayor's Office of Contract Services

- Please submit two completed forms. Copies will not be accepted.
- Please send both copies to the agency that requested it, unless you are advised to send it directly to the Mayor's Office of Contract Services (MOCS).
- A materially false statement willfully or fraudulently made in connection with this certification, and/or the failure to conduct appropriate due diligence in verifying the information that is the subject of this certification, may result in rendering the submitting entity non-responsible for the purpose of contract award.
- A materially false statement willfully or fraudulently made in connection with this certification may subject the person making the false statement to criminal charges

I, Carlo Cuzzi, being duly sworn, state that I have read
Enter Your Name

and understand all the items contained in the vendor questionnaire and any submission of change as identified on page one of this form and certify that as of this date, these items have not changed. I further certify that, to the best of my knowledge, information and belief, those answers are full, complete, and accurate; and that, to the best of my knowledge, information, and belief, those answers continue to be full, complete, and accurate.

In addition, I further certify on behalf of the submitting vendor that the information contained in the principal questionnaire(s) and any submission of change identified on page two of this form have not changed and have been verified and continue, to the best of my knowledge, to be full, complete and accurate.

I understand that the City of New York will rely on the information supplied in this certification as additional inducement to enter into a contract with the submitting entity.

Vendor Questionnaire *This section is required.*

This refers to the vendor questionnaire(s) submitted for the vendor doing business with the City.

Name of Submitting Entity: Triumph Const. Corp.

Vendor's Address: 1354 Seneca ave Bronx NY 10474

Vendor's EIN or TIN: 134050635 Requesting Agency: NYCDDC

Are you submitting this Certification as a parent? (Please circle one) Yes (No)

Signature date on the last full vendor questionnaire signed for the submitting vendor: 5/19/14

Signature date on change submission for the submitting vendor: _____

Principal Questionnaire

This section refers to the most recent principal questionnaire submissions.

NYC Mayor's Office of Contract Services

	Principal Name	Date of signature on last full Principal Questionnaire	Date(s) of signature on submission of change
1	Carlo Curzi	5/19/16	
2			
3			
4			
5			
6			

☐ Check if additional changes were submitted and attach a document with the date of additional submissions.

Certification *This section is required.*

This form must be signed and notarized. Please complete this twice. Copies will not be accepted.

Certified By:

Carlo Curzi
Name (Print)

President
Title

Triumph Const. Corp
Name of Submitting Entity

Signature — 3/7/17 *Date*

Notarized By:

Notary Public — Westchester *County License Issued* — 01JA6078625 *License Number*

SHIRLEY JACOBS
NOTARY PUBLIC-STATE OF NEW YORK
No. 01JA6078625
Qualified in Westchester County
My Commission Expires 08-05-2018

Sworn to before me on: 3/7/17
Date

Certificate of No Change Form

Mayor's Office of Contract Services

- Please submit two completed forms. Copies will not be accepted.
- Please send both copies to the agency that requested it, unless you are advised to send it directly to the Mayor's Office of Contract Services (MOCS).
- A materially false statement willfully or fraudulently made in connection with this certification, and/or the failure to conduct appropriate due diligence in verifying the information that is the subject of this certification, may result in rendering the submitting entity non-responsible for the purpose of contract award.
- A materially false statement willfully or fraudulently made in connection with this certification may subject the person making the false statement to criminal charges

I, Carlo Cuzzi, being duly sworn, state that I have read
Enter Your Name

and understand all the items contained in the vendor questionnaire and any submission of change as identified on page one of this form and certify that as of this date, these items have not changed. I further certify that, to the best of my knowledge, information and belief, those answers are full, complete, and accurate; and that, to the best of my knowledge, information, and belief, those answers continue to be full, complete, and accurate.

In addition, I further certify on behalf of the submitting vendor that the information contained in the principal questionnaire(s) and any submission of change identified on page two of this form have not changed and have been verified and continue, to the best of my knowledge, to be full, complete and accurate.

I understand that the City of New York will rely on the information supplied in this certification as additional inducement to enter into a contract with the submitting entity.

Vendor Questionnaire *This section is required.*

This refers to the vendor questionnaire(s) submitted for the vendor doing business with the City.

Name of Submitting Entity: Triumph Const Corp

Vendor's Address: 1354 Seneca ave Bronx NY 10474

Vendor's EIN or TIN: 13405d035 Requesting Agency: NYC DOC

Are you submitting this Certification as a parent? (Please circle one) Yes (No)

Signature date on the last full vendor questionnaire signed for the submitting vendor: 5/19/16

Signature date on change submission for the submitting vendor: _____

Principal Questionnaire

This section refers to the most recent principal questionnaire submissions.

Mayor's Office of Contract Services

	Principal Name	Date of signature on last full Principal Questionnaire	Date(s) of signature on submission of change
1	Carlo Cuzzi	5/19/16	
2			
3			
4			
5			
6			

☐ Check if additional changes were submitted and attach a document with the date of additional submissions.

Certification *This section is required.*

This form must be signed and notarized. Please complete this twice. Copies will not be accepted.

Certified By:

Carlo Cuzzi

Name (Print)

President

Title

Triumph Const. Corp.

Name of Submitting Entity

Signature — *Date* 3/7/17

Notarized By:

Notary Public — *County License Issued* Westchester — *License Number* 01JA6078625

Sworn to before me on: 3/7/17
Date

SHIRLEY JACOBS
NOTARY PUBLIC-STATE OF NEW YORK
No. 01JA6078625
Qualified in Westchester County
My Commission Expires 08-05-18

IRAN DIVESTMENT ACT COMPLIANCE RIDER

FOR NEW YORK CITY CONTRACTORS

The Iran Divestment Act of 2012, effective as of April 12, 2012, is codified at State Finance Law ("SFL") §165-a and General Municipal Law ("GML") §103-g. The Iran Divestment Act, with certain exceptions, prohibits municipalities, including the City, from entering into contracts with persons engaged in investment activities in the energy sector of Iran. Pursuant to the terms set forth in SFL §165-a and GML §103-g, a person engages in investment activities in the energy sector of Iran if:

(a) The person provides goods or services of twenty million dollars or more in the energy sector of Iran, including a person that provides oil or liquefied natural gas tankers, or products used to construct or maintain pipelines used to transport oil or liquefied natural gas, for the energy sector of Iran; or

(b) The person is a financial institution that extends twenty million dollars or more in credit to another person, for forty-five days or more, if that person will use the credit to provide goods or services in the energy sector in Iran and is identified on a list created pursuant to paragraph (b) of subdivision three of Section 165-a of the State Finance Law and maintained by the Commissioner of the Office of General Services.

A bid or proposal shall not be considered for award nor shall any award be made where the bidder or proposer fails to submit a signed and verified bidder's certification.

Each bidder or proposer must certify that it is not on the list of entities engaged in investment activities in Iran created pursuant to paragraph (b) of subdivision 3 of Section 165-a of the State Finance Law. In any case where the bidder or proposer cannot certify that they are not on such list, the bidder or proposer shall so state and shall furnish with the bid or proposal a signed statement which sets forth in detail the reasons why such statement cannot be made. The City of New York may award a bid to a bidder who cannot make the certification on a case by case basis if:

(1) The investment activities in Iran were made before the effective date of this section (i.e., April 12, 2012), the investment activities in Iran have not been expanded or renewed after the effective date of this section and the person has adopted, publicized and is implementing a formal plan to cease the investment activities in Iran and to refrain from engaging in any new investments in Iran: or

(2) The City makes a determination that the goods or services are necessary for the City to perform its functions and that, absent such an exemption, the City would be unable to obtain the goods or services for which the contract is offered. Such determination shall be made in writing and shall be a public document.

BIDDER'S CERTIFICATION OF COMPLIANCE WITH IRAN DIVESTMENT ACT

Pursuant to General Municipal Law §103-g, which generally prohibits the City from entering into contracts with persons engaged in investment activities in the energy sector of Iran, the bidder/proposer submits the following certification:

[*Please Check One*]

BIDDER'S CERTIFICATION

☑ By submission of this bid or proposal, each bidder/proposer and each person signing on behalf of any bidder/proposer certifies, and in the case of a joint bid each party thereto certifies as to its own organization, under penalty of perjury, that to the best of its knowledge and belief, that each bidder/proposer is not on the list created pursuant to paragraph (b) of subdivision 3 of Section 165-a of the State Finance Law.

☐ I am unable to certify that my name and the name of the bidder/proposer does not appear on the list created pursuant to paragraph (b) of subdivision 3 of Section 165-a of the State Finance Law. I have attached a signed statement setting forth in detail why I cannot so certify.

SIGNATURE

Carlo Uzzi

PRINTED NAME

President

TITLE

Sworn to before me this
1 day of March 2017

Notary Public

SHIRLEY JACOBS
NOTARY PUBLIC-STATE OF NEW YORK
No. 01JA6078625
Qualified in Westchester County
My Commission Expires 08-05-18

Dated:

The City of New York Department of Small Business Services
Division of Labor Services Contract Compliance Unit
110 William Street, New York, New York 10038
Phone: (212) 513 - 6323
Fax: (212) 618-8879

CONSTRUCTION EMPLOYMENT REPORT

GENERAL INFORMATION

1. Your contractual relationship in this contract is: Prime contractor x Subcontractor ___

1a. Are M/WBE goals attached to this project? Yes ✓ No ___

2. Please check one of the following if your firm would like information on how to certify with the City of New York as a:

___Minority Owned Business Enterprise
___Women Owned Business Enterprise
___Disadvantaged Business Enterprise
___Locally Based Business Enterprise
___Emerging Business Enterprise

2a. If you are certified as an **MBE, WBE, LBE, EBE** or **DBE**, what city/state agency are you certified with? _____ Are you DBE certified? Yes ___ No ✓

3. Please indicate if you would like assistance from SBS in identifying certified M/WBEs for contracting opportunities: Yes___ No ✓

4. Is this project subject to a project labor agreement? Yes ___ No ___

5. Are you a Union contractor? Yes ✓ No ___ If yes, please list which local(s) you affiliated with 731, 1010, 14, 15

6. Are you a Veteran owned company? Yes ___ No ✓

PART I: CONTRACTOR/SUBCONTRACTOR INFORMATION

7. 134054635 — DCUZZI@TriumphConstCorp.Com
Employer Identification Number or Federal Tax I.D. — Email Address

8. Triumph Const. Corp.
Company Name

9. 1354 Seneca ave Bronx NY 10474
Company Address and Zip Code

10. Carlo Cuzzi — 718-861-6060
Chief Operating Officer — Telephone Number

11. Same
Designated Equal Opportunity Compliance Officer — Telephone Number
(If same as Item #10, write "same")

12. Same
Name of Prime Contractor and Contact Person
(If same as Item #8, write "same")

13. Number of employees in your company: 200+

14. Contract information:

(a) NYCDDC
Contracting Agency (City Agency)

(b) 37,548,087.57
Contract Amount

(c) 85020171WM00008C
Procurement Identification Number (PIN)

(d) _____
Contract Registration Number (CT#)

(e) _____
Projected Commencement Date

(f) _____
Projected Completion Date

(g) Description and location of proposed contract:
Replacement of Trunk & Distribution water mains
flatbush Ave bt. Sterling & 8th Ave. (BK)

15. Has your firm been reviewed by the Division of Labor Services (DLS) within the past 36 months and issued a Certificate of Approval? Yes ✓ No___

If yes, attach a copy of certificate.

16. Has DLS within the past month reviewed an Employment Report submission for your company and issued a Conditional Certificate of Approval? Yes___ No ✓

If yes, attach a copy of certificate.

NOTE: DLS WILL NOT ISSUE A CONTINUED CERTIFICATE OF APPROVAL IN CONNECTION WITH THIS CONTRACT UNLESS THE REQUIRED CORRECTIVE ACTIONS IN PRIOR CONDITIONAL CERTIFICATES OF APPROVAL HAVE BEEN TAKEN.

17. Has an Employment Report already been submitted for a different contract (not covered by this Employment Report) for which you have not yet received compliance certificate?
Yes___ No ✓ If yes,

Date submitted: _____
Agency to which submitted: _____
Name of Agency Person: _____
Contract No: _____
Telephone: _____

18. Has your company in the past 36 months been audited by the United States Department of Labor, Office of Federal Contract Compliance Programs (OFCCP)? Yes___ No___

If yes,

NYC Small Business Services
careers
businesses
neighborhoods

Gregg Bishop
Commissioner

216CY293

June 28, 2016

Mr. Sergio Elras
Triumph Construction Corp.
1354 Seneca Avenue
Bronx, NY 10474

Re: **New York City Department of Design and Construction Contract**; Pin No. 8502014HW0078C; Construction of Simple, Complex and Landmark Pedestrian Ramps, etc.; Borough of Brooklyn; Contract Value: $6,475,482.52; **Continued Certificate of Approval.**

Dear Mr. Elras:

Please be advised that Triumph Construction Corp. has already received notice of its approval for the three (3) year period indicated in the Department of Small Business Services/Division of Labor Services (DLS) Certificate of Approval dated April 23, 2015, for DLS File No. 215CY140.

As your organization continues to meet the equal employment opportunity requirements of the City of New York, DLS approves the awarding of the above-referenced contract. This approval does not extend the initial three **(3)** year approval **(April 23, 2015 – April 22, 2018)** referred to above.

If you have any questions regarding this letter, please call **Ms. Judy Mitchell-Albert**, Contract Reviewer, at (212) 513-9272 or e-mail her at jmitchell-albert@sbs.nyc.gov.

Very truly yours,

Helen Wilson
Assistant Commissioner
Division of Labor Services

cc: Lorraine Holley (DDC)
Judy Mitchell-Albert
FILE

(a) Name and address of OFCCP office.

_____

_____

(b) Was a Certificate of Equal Employment Compliance issued within the past 36 months? Yes___ No___

If yes, attach a copy of such certificate.

(c) Were any corrective actions required or agreed to? Yes___ No___

If yes, attach a copy of such requirements or agreements.

(d) Were any deficiencies found? Yes___ No___

If yes, attach a copy of such findings.

19. Is your company or its affiliates a member or members of an employers' trade association which is responsible for negotiating collective bargaining agreements (CBA) which affect construction site hiring? Yes___ No ✓

If yes, attach a list of such associations and all applicable CBA's.

PART II: DOCUMENTS REQUIRED

20. For the following policies or practices, attach the relevant documents (e.g., printed booklets, brochures, manuals, memoranda, etc.). If the policy(ies) are unwritten, attach a full explanation of the practices. See instructions.

___ (a) Health benefit coverage/description(s) for all management, nonunion and union employees (whether company or union administered)

___ (b) Disability, life, other insurance coverage/description

___ (c) Employee Policy/Handbook

___ (d) Personnel Policy/Manual

___ (e) Supervisor's Policy/Manual

___ (f) Pension plan or 401k coverage/description for all management, nonunion and union employees, whether company or union administered

___ (g) Collective bargaining agreement(s).

___ (h) Employment Application(s)

___ (i) Employee evaluation policy/form(s).

___ (j) Does your firm have medical and/or non-medical (i.e. education, military, personal, pregnancy, child care) leave policy?

21. To comply with the Immigration Reform and Control Act of 1986 when and of whom does your firm require the completion of an I-9 Form?

(a) Prior to job offer	Yes___	No✓
(b) After a conditional job offer	Yes✓	No___
(c) After a job offer	Yes✓	No___
(d) Within the first three days on the job	Yes___	No✓
(e) To some applicants	Yes___	No✓
(f) To all applicants	Yes___	No✓
(g) To some employees	Yes___	No✓
(h) To all employees	Yes✓	No___

22. Explain where and how completed I-9 Forms, with their supportive documentation, are maintained and made accessible.

Employee Files

23. Does your firm or any of its collective bargaining agreements require job applicants to take a medical examination? Yes___ No✓

If yes, is the medical examination given:

(a) Prior to a job offer	Yes___	No___
(b) After a conditional job offer	Yes___	No___
(c) After a job offer	Yes___	No___
(d) To all applicants	Yes___	No___
(e) Only to some applicants	Yes___	No___

If yes, list for which applicants below and attach copies of all medical examination or questionnaire forms and instructions utilized for these examinations.

24. Do you have a written equal employment opportunity (EEO) policy? Yes✓ No___

If yes, list the document(s) and page number(s) where these written policies are located.

Attached

25. Does the company have a current affirmative action plan(s) (AAP)

_____Minorities and Women
_____Individuals with handicaps
_____Other. Please specify _____

26. Does your firm or collective bargaining agreement(s) have an internal grievance procedure with respect to EEO complaints? Yes___ No✓

If yes, please attach a copy of this policy.

If no, attach a report detailing your firm's unwritten procedure for handling EEO complaints.

1354 Seneca Avenue
Bronx, New York 10474
Phone: 718 861-6060
Fax: 718 861-6660

QUESTION #20

A) Health benefits are offered to non-union employees after 3 months of employment. Union employees are covered by their Union Benefits in which Triumph pays into as per our collective bargaining agreements.
B) Disability coverage is paid to NYS as required. Life insurance and other optional coverage may be provided by Triumph on a case by case basis. Union employees are cover as per union benefits.
C) Triumph does have a written policy that is available upon request.
D) Triumph does have a written policy that is available upon request.
E) Triumph does have a written policy that is available upon request.
F) Union administered
G) Collective bargaining agreements are available for review if required
H) Employment applications are help in employee files; which are maintained at our office
I) Employee evaluations are performed on an informal basis
J) We do have an internal as needed leave policy that is discussed individually upon request.

1354 Seneca Avenue
Bronx, New York 10474
Phone: 718 861-6060
Fax: 718 861-6660

QUESTION #20

A) Health benefits are offered to non-union employees after 3 months of employment. Union employees are covered by their Union Benefits in which Triumph pays into as per our collective bargaining agreements.
B) Disability coverage is paid to NYS as required. Life insurance and other optional coverage may be provided by Triumph on a case by case basis. Union employees are cover as per union benefits.
C) Triumph does have a written policy that is available upon request.
D) Triumph does have a written policy that is available upon request.
E) Triumph does have a written policy that is available upon request.
F) Union administered
G) Collective bargaining agreements are available for review if required
H) Employment applications are help in employee files; which are maintained at our office
I) Employee evaluations are performed on an informal basis
J) We do have an internal as needed leave policy that is discussed individually upon request.

1354 Seneca Avenue
Bronx, New York 10474
Phone: 718 861-6060
Fax: 718 861-6660

It is the policy of Triumph Construction Corp. not to discriminate against any employee or applicant for employment because of race, creed, color, national origin, sex, age, disability, marital status, sexual orientation or citizenship status. We will take specific action to ensure that applicants are employed and that employees are treated during employment, without regard to their race, creed, color, national origin, sex, age, disability, marital status, sexual orientation or citizenship status. Such action shall include, but not be limited to the following: recruitment, hiring, compensation, training and apprenticeship, promotion, upgrading, demotion, downgrading, transfer, lay-off and termination, and all other Terms and Conditions of Employment except as provided by law.

TRIUMPH CONSTRUCTION CORP.

CARLO CUZZI, PRESIDENT

Signature

3/7/17

Date

27. Has any employee, within the past three years, filed a complaint pursuant to an internal grievance procedure or with any official of your firm with respect to equal employment opportunity? Yes___ No✓

If yes, attach an internal complaint log. See instructions.

28. Has your firm, within the past three years, been named as a defendant (or respondent) in any administrative or judicial action where the complainant (plaintiff) alleged violation of any anti-discrimination or affirmative action laws? Yes___ No✓

If yes, attach a log. See instructions.

29. Are there any jobs for which there are physical qualifications? Yes___ No✓

If yes, list the job(s), submit a job description and state the reason(s) for the qualification(s).

_____

_____

30. Are there any jobs for which there are age, race, color, national origin, sex, creed, disability, marital status, sexual orientation, or citizenship qualifications? Yes___ No✓

If yes, list the job(s), submit a job description and state the reason(s) for the qualification(s).

_____

_____

FOR OFFICIAL USE ONLY: File No._____

SIGNATURE PAGE

I, (print name of authorized official signing) Carlo Cuzzi hereby certify that the information submitted herewith is true and complete to the best of my knowledge and belief and submitted with the understanding that compliance with New York City's equal employment requirements, as contained in Chapter 56 of the City Charter, Executive Order No. 50 (1980), as amended, and the implementing Rules and Regulations, is a contractual obligation. I also agree on behalf of the company to submit a certified copy of payroll records to the Division of Labor Services on a monthly basis.

Triumph Const Corp.
Contractor's Name

Dominick Cuzzi — P.M.
Name of person who prepared this Employment Report — Title

Carlo Cuzzi — President
Name of official authorized to sign on behalf of the contractor — Title

718-861-6060
Telephone Number

Signature of authorized official — 3/7/17
Date

If contractors are found to be underutilizing minorities and females in any given trade based on Chapter 56 Section 3H, the Division of Labor Services reserves the right to request the contractor's workforce data and to implement an employment program.

Contractors who fail to comply with the above mentioned requirements or are found to be in noncompliance may be subject to the withholding of final payment.

Willful or fraudulent falsifications of any data or information submitted herewith may result in the termination of the contract between the City and the bidder or contractor and in disapproval of future contracts for a period of up to five years. Further, such falsification may result in civil and/and or criminal prosecution.

To the extent permitted by law and consistent with the proper discharge of DLS' responsibilities under Charter Chapter 56 of the City Charter and Executive Order No. 50 (1980) and the implementing Rules and Regulations, all information provided by a contractor to DLS shall be confidential.

Only original signatures accepted.

Sworn to before me this 7th day of March 2017

SHIRLEY JACOBS
NOTARY PUBLIC-STATE OF NEW YORK
No. 01JA6078625
Qualified in Westchester County
My Commission Expires 08-05-15

Notary Public

Authorized Signature — 3/7/17
Date

FOR OFFICIAL USE ONLY: File No._____

FORM A. CONTRACT BID INFORMATION: USE OF SUBCONTRACTORS/TRADES

1. Do you plan to subcontractor work on this contract? Yes ✓ No___

2. If yes, complete the chart below.

NOTE: All proposed subcontractors with a subcontract in excess of $750,000 must complete an Employment Report for review and approval before the contract may be awarded and work commences.

SUBCONTRACTOR'S NAME*	OWNERSHIP (ENTER APPROPRIATE CODE LETTERS BELOW)	WORK TO BE PERFORMED BY SUBCONTRACTOR	TRADE PROJECTED FOR USE BY SUBCONTRACTOR	PROJECTED DOLLAR VALUE OF SUBCONTRACT
	F	Supplier		2,000,000
	B	Trucking		1,400,000

***If subcontractor is presently unknown, please enter the trade (craft name).**

OWNERSHIP CODES
- W: White
- B: Black
- H: Hispanic
- A: Asian
- N: Native American
- F: Female

FOR OFFICIAL USE ONLY: File No._____

FORM B: PROJECTED WORKFORCE

TRADE CLASSIFICATION CODES

(J) Journeylevel Workers
(H) Helper
(TOT) Total by Column
(A) Apprentice
(TRN) Trainee

For each trade to be engaged by your company for this project, enter the projected workforce for Males and Females by trade classification on the charts below.

Trade: Operator

Union Affiliation, if applicable: 14 & 15

Total (Col. #1-10): 3

Total Minority, Male & Female (Col. #2,3,4,5,7,8,9, & 10): 2

Total Female (Col. #6 – 10): 0

	MALES					FEMALES				
	(1) White Non Hisp.	(2) Black Non Hisp.	(3) Hisp.	(4) Asian	(5) Native Amer.	(6) White Non Hisp.	(7) Black Non Hisp.	(8) Hisp.	(9) Asian	(10) Native Amer.
J	3	2								
H										
A										
TRN										
TOT	3	2								

What are the recruitment sources for you projected hires (i.e., unions, government employment office, job tap center, community outreach)?

Union halls

FOR OFFICIAL USE ONLY: File No._____

FORM B: PROJECTED WORKFORCE

Trade: Laborer

Union Affiliation, if applicable: 731

Total (Col. #1-10): 4

Total Minority, Male & Female (Col. #2,3,4,5,7,8,9, & 10): 3

Total Female (Col. #6 – 10): 0

	MALES					FEMALES				
	(1) White Non Hisp.	(2) Black Non Hisp.	(3) Hisp.	(4) Asian	(5) Native Amer.	(6) White Non Hisp.	(7) Black Non Hisp.	(8) Hisp.	(9) Asian	(10) Native Amer.
J	1	1	2							
H										
A										
TRN										
TOT	1	1	2							

What are the recruitment sources for you projected hires (i.e., unions, government employment office, job tap center, community outreach)?

Union halls

FOR OFFICIAL USE ONLY: File No._____

FORM C: CURRENT WORKFORCE

TRADE CLASSIFICATION CODES

(J) Journeylevel Workers
(H) Helper
(TOT) Total by Column
(A) Apprentice
(TRN) Trainee

For each trade currently engaged by your company for all work performed in New York City, enter the current workforce for Males and Females by trade classification on the charts below.

Trade: Formsetter

Union Affiliation, if applicable: 1010

Total (Col. #1-10): 6

Total Minority, Male & Female (Col. #2,3,4,5,7,8,9, & 10): 6

Total Female (Col. #6 – 10): 0

	MALES					FEMALES				
	(1) White Non Hisp.	(2) Black Non Hisp.	(3) Hisp.	(4) Asian	(5) Native Amer.	(6) White Non Hisp.	(7) Black Non Hisp.	(8) Hisp.	(9) Asian	(10) Native Amer.
J			6							
H										
A										
TRN										
TOT			6							

What are the recruitment sources for you projected hires (i.e., unions, government employment office, job tap center, community outreach)?

Union halls.

FOR OFFICIAL USE ONLY: File No._____

FORM C: CURRENT WORKFORCE

Trade: _____

Union Affiliation, if applicable _____

Total (Col. #1-10): _____

Total Minority, Male & Female (Col. #2,3,4,5,7,8,9, & 10): _____

Total Female (Col. #6 – 10): _____

	MALES					FEMALES				
	(1) White Non Hisp.	(2) Black Non Hisp.	(3) Hisp.	(4) Asian	(5) Native Amer.	(6) White Non Hisp.	(7) Black Non Hisp.	(8) Hisp.	(9) Asian	(10) Native Amer.
J										
H										
A										
TRN										
TOT										

What are the recruitment sources for you projected hires (i.e., unions, government employment office, job tap center, community outreach)?

_____

_____

FOR OFFICIAL USE ONLY: File No._____

Qualification Form

List previous projects completed to meet the special experience requirements for this contract. Please photocopy this form for submission of all required projects.

Name of Contractor: _____

Name of Project: _____

Location of Project: _____

Owner or Owner's representative (Architect or Engineer) who is familiar with the work performed:

Name: _____
Title: _____ Phone Number: _____

Brief description of the Project completed or the Project in progress: _____
_____
_____

Was the Project performed as a prime, a subcontractor or a sub-subcontractor: _____

Amount of Contract, Subcontract or Sub-subcontract: _____

Start Date and Completion Date: _____

****

Name of Contractor: _____

Name of Project: _____

Location of Project: _____

Owner or Owner's representative (Architect or Engineer) who is familiar with the work performed:

Name: _____
Title: _____ Phone Number: _____

Brief description of the Project completed or the Project in progress: _____
_____
_____

Was the Project performed as a prime, a subcontractor or a sub-subcontractor: _____

Amount of Contract, Subcontract or Sub-subcontract: _____

Start Date and Completion Date: _____

(NO TEXT ON THIS PAGE)

ATTACHMENT 1 - BID INFORMATION

PROJECT ID: BED798
PIN: 8502017WM0008C

Description and Location of Work:

REPLACEMENT OF TRUNK AND DISTRIBUTION WATER MAINS, COMBINED SEWER AND APPURTENANCES IN FLATBUSH AVENUE BETWEEN STERLING PLACE AND 8TH AVENUE, ETC.

INCLUDING SEWER, WATER MAIN, 8TH AVENUE TRIANGLE STREETSCAPE, NECKDOWNS, STREET LIGHTING, AND TRAFFIC SIGNAL WORK
Together With All Work Incidental Thereto
BOROUGH OF BROOKLYN
CITY OF NEW YORK

Documents Available At: 30-30 Thomson Avenue
First Floor Bid Procurement Room
Long Island City, New York 11101
8:30 A.M. to 4:00 P.M. – Monday through Friday

Submission of Bids To: 30-30 Thomson Avenue
First Floor Bid Procurement Room
Long Island City, New York 11101
Before 11:00 A.M. on **MARCH 7, 2017**

Bid Opening: 30-30 Thomson Avenue
First Floor Bid Procurement Room
Long Island City, New York 11101

Time and Date: 11:00 A.M. on **MARCH 7, 2017**

Pre-Bid Conference: Yes _____ No X
If Yes, Mandatory _____ Optional: _____
Time and Date: _____
Location: _____

Bid Security: Bid Security is required in the amount set forth below; provided, however, bid security is not required if the TOTAL BID PRICE set forth on the Bid Form is less than $ 1,000,000.00.

(1) Bond in an amount not less than 10% of the TOTAL BID PRICE set forth on the Bid Form, OR
(2) Certified Check in an amount not less than 2% of the TOTAL BID PRICE set forth on the Bid Form

Performance and Payment Security: Required for contracts in the amount of $1,000,000 or more. Performance Security and Payment Security shall each be in an amount equal to 100% of the Contract Price.

Agency Contact Person: Lorraine Holley
Phone: 718-391-2601 FAX: 718-391-2627

(NO TEXT ON THIS PAGE)

LIST OF DRAWINGS

PROJECT ID: BED798
PIN: 8502017WM0008C

LIST OF DRAWINGS		
TOTAL SHEET NO.	**SHEET NO.**	**DESCRIPTION**
1 OF 66	1 OF 38	TITLE SHEET
2 OF 66	2 OF 38	LEGEND
3 OF 66	3 OF 38	KEY PLAN
4 OF 66	4 OF 38	GENERAL NOTES
5 OF 66	5 OF 38	NYC TRANSIT GENERAL NOTES & HISTORICAL AND LANDMARK AREA NOTES
6 - 16 OF 66	6 - 16 OF 38	PLAN AND PROFILE
17 OF 66	17 OF 38	SPECIAL C.B. & PRECAST MANHOLE DETAILS
18 OF 66	18 OF 38	HIGHWAY CONSTRUCTION PLAN
19 OF 66	19 OF 38	PAVEMENT MARKING PLAN
20 OF 66	20 OF 38	SIGN PLAN
21 - 23 OF 66	21 - 23 OF 38	TRAFFIC SIGNAL PLAN
24 OF 66	24 OF 38	STREET LIGHTING PLAN
25 OF 66	25 OF 38	TREE MITIGATION PLAN
26 OF 66	28 OF 38	TREE MITIGATION DETAILS
27 OF 66	27 OF 38	PLANTING NOTES AND SCHEDULE
28 OF 66	28 OF 38	LANDSCAPE LAYOUT AND PLANTING
29 OF 66	29 OF 38	LANDSCAPE GRADING PLAN
30 OF 66	30 OF 38	LANDSCAPE HARDSCAPE DETAILS
31 OF 66	31 OF 38	LANDSCAPE PLANTING DETAILS
32 OF 66	32 OF 38	MISCELLANEOUS DETAILS & TYPICAL SECTIONS
33 OF 66	33 OF 38	F.T.R.C SEWER DETAILS
34 OF 66	34 OF 38	72" B.F.V CHAMBER
35 OF 66	35 OF 38	CHAMBER NO.1
36 OF 66	36 OF 38	CHAMBER NO.2
37 OF 66	37 OF 38	CHAMBER NO.3
38 OF 66	38 OF 38	CHAMBER NO.4
39 - 41 OF 66	MPT1 - MPT3	MAINTENANCE AND PROTECTION OF TRAFFIC
42 - 43 OF 66	FD1 - FD2	FDNY BASE MAP
44 OF 66	TA1	NEW YORK CITY TRANSIT SYSTEM DETAILS
45 - 54 OF 66	B1 - B10	RECORD OF BORINGS
55 - 66 OF 66	CP1 - CP12	CATHODIC PROTECTION SYSEM

(NO TEXT ON THIS PAGE)

BID SCHEDULE

NOTICE TO BIDDERS

Items listed in this Bid Schedule which have one (1) digit followed by a decimal (e.g. 4.02 CA), excluding items beginning with the number "8.01", shall comply with the requirements of the corresponding numerical Sections of the NYCDOT Standard Highway Specifications as amended by Revisions to the New York City Department of Transportation Standard Highway Specifications and I-Pages New Sections, herein Volume 3 of 3.

Items listed in this Bid Schedule beginning with the number "8.01" (e.g. 8.01 C1) shall comply with the requirements of Specifications for Handling, Transportation and Disposal of Nonhazardous and Potentially Hazardous Contaminated Materials, herein Volume 3 of 3.

Items listed in this Bid Schedule which have two (2) digits beginning with the number "5" followed by a decimal (e.g. 53.11DR) shall comply with the requirements of the New York City Department of Environmental Protection (NYCDEP) Standard Sewer and Water Main Specifications dated July 1, 2014.

Items listed in this Bid Schedule which have two (2) digits beginning with the number "6" followed by a decimal (e.g. 60.13M0A24) shall comply with the requirements of the New York City Department of Environmental Protection (NYCDEP) Standard Sewer and Water Main Specifications dated July 1, 2014.

Items listed in this Bid Schedule which have two (2) digits beginning with the number "7" followed by a decimal (e.g. 70.81CB) shall comply with the requirements of the New York City Department of Environmental Protection (NYCDEP) Standard Sewer and Water Main Specifications dated July 1, 2014.

The item listed in this Bid Schedule "79.11AATA" shall comply with the requirements of Specifications for Abatement of Transit Authority Duct Insulation Asbestos Containing Materials, herein Volume 3 of 3.

Item listed in this Bid Schedule with the prefix "PK-"(e.g. PK-444GP) are modified version of NYCDPR Items and shall comply with the requirements of the corresponding numerical Section incorporated in I-Pages, herein Volume 3 of 3.

Items listed in this Bid Schedule beginning with the prefix "SL-" (e.g. SL-21.09.08) are Street Lighting Items, less the prefix, which shall be done in accordance with the requirements of Sub-Section 1.06.23.(D) and Section 1.06.49 in the NYCDOT Standard Highway Specifications.

Items listed in this Bid Schedule beginning with the prefix "T-" (e.g. T-2.22) are Traffic Items, less the prefix, which shall be done in accordance with the requirements of Sub-Section 1.06.23.(D) and Section 1.06.49 in the NYCDOT Standard Highway Specifications.

Items listed in this Bid Schedule beginning with the prefix "UTL-" (e.g. UTL-6.01.8) are for Gas Cost Sharing (EP-7) work and shall comply with the requirements of Gas Cost Sharing (EP-7) Standard Specifications, herein Volume 3 of 3.

(NO TEXT ON THIS PAGE)

BID SCHEDULE

NOTE: (1) The Agency may reject a bid if it contains unbalanced bid prices. An unbalanced bid is considered to be one containing lump sum or unit items which do not reflect reasonable actual costs plus a reasonable proportionate share of the Bidder's anticipated profit, overhead costs, and other indirect costs, anticipated for the performance of the items in question.

(2) The following bid prices on Unit Price Contracts are to be paid for the actual quantities of the item numbers in the completed work or structure, and they cover the cost of all work, labor, material, tools, plant and appliances of every description necessary to complete the entire work, as specified, and the removal of all debris, temporary work and appliances.

(3) PLEASE BE SURE A LEGIBLE BID IS ENTERED, IN INK, FOR EACH ITEM.
Alterations must be initialed in ink by the bidder.

(4) The Extended Amount entered in Column 6 shall be the product of the Estimated Quantity in Column 3 times the Unit Price Bid in Column 5.

(5) Prospective bidders must examine the Bid Schedule carefully and, before bidding, must advise the Commissioner, in writing, if any pages are missing, and must request that such missing pages be furnished them. The pages of this Bid Schedule are numbered consecutively, as follows:
B - 3 Through B - 55

PLEASE BE SURE A LEGIBLE BID IS ENTERED FOR EACH ITEM.
THE BIDDER SHALL INSERT THE TOTAL BID PRICE IN
THE BID FORM ON PAGE C-4 OF THIS BID BOOKLET.

Department of Design and Construction

NEW YORK CITY DEPARTMENT OF DESIGN AND CONSTRUCTION
DIVISION OF INFRASTRUCTURE - BUREAU OF DESIGN

PROJECT ID: BED798
CONTRACT PIN: 8502017WM0008C

12/29/2016 2:29 PM

BID SCHEDULE FORM

COL. 1 SEQ. NO	COL. 2 ITEM NUMBER and DESCRIPTION	COL. 3 ENGINEER'S ESTIMATE OF QUANTITY	COL. 4 UNIT	COL. 5 UNIT PRICE (IN FIGURES) DOLLARS	CTS	COL. 6 EXTENDED AMOUNT (IN FIGURES) DOLLARS	CTS
001	**4.02 AB-R** ASPHALTIC CONCRETE WEARING COURSE, 1-1/2" THICK	2,150.00	S.Y.				
002	**4.02 AF-R** ASPHALTIC CONCRETE WEARING COURSE, 2" THICK	25,017.00	S.Y.				
003	**4.02 CA** BINDER MIXTURE	7,798.00	TONS				
004	**4.04 H** CONCRETE BASE FOR PAVEMENT, VARIABLE THICKNESS FOR TRENCH RESTORATION, (HIGH-EARLY STRENGTH)	1,031.00	C.Y.				
005	**4.05 AX** HIGH-EARLY STRENGTH REINFORCED CONCRETE PAVEMENT (BUS STOPS)	95.00	C.Y.				
006	**4.07 AB** RESET BLUESTONE CURB	120.00	L.F.				

BID SCHEDULE FORM

COL. 1 SEQ. NO	COL. 2 ITEM NUMBER and DESCRIPTION	COL. 3 ENGINEER'S ESTIMATE OF QUANTITIY	COL. 4 UNIT	COL. 5 UNIT PRICE (IN FIGURES) DOLLARS	CTS	COL. 6 EXTENDED AMOUNT (IN FIGURES) DOLLARS	CTS
007	4.07 NYHA NEW NY HISTORICAL GRANITE CURB, STRAIGHT	936.00	L.F.				
008	4.07 NYHC NEW NY HISTORICAL GRANITE CURB, CORNER	582.00	L.F.				
009	4.08 BA CONCRETE CURB (21" DEEP)	195.00	L.F.				
010	4.09 AD STRAIGHT STEEL FACED CONCRETE CURB (18" DEEP)	334.00	L.F.				
011	4.09 AE STRAIGHT STEEL FACED CONCRETE CURB (21" DEEP)	405.00	L.F.				
012	4.09 CD CORNER STEEL FACED CONCRETE CURB (18" DEEP)	310.00	L.F.				

BID SCHEDULE FORM

COL. 1 SEQ. NO	COL. 2 ITEM NUMBER and DESCRIPTION	COL. 3 ENGINEER'S ESTIMATE OF QUANTITY	COL. 4 UNIT	COL. 5 UNIT PRICE (IN FIGURES) DOLLARS	CTS	COL. 6 EXTENDED AMOUNT (IN FIGURES) DOLLARS	CTS
013	4.11 CA FILL, PLACE MEASUREMENT	11.00	C.Y.				
014	4.13 AAS 4" CONCRETE SIDEWALK (UNPIGMENTED)	12,609.00	S.F.				
015	4.13 AAT 4" CONCRETE SIDEWALK ON EXISTING FOUNDATION (UNPIGMENTED)	165.00	S.F.				
016	4.13 ABS 4" CONCRETE SIDEWALK (PIGMENTED)	4,878.00	S.F.				
017	4.13 BAS 7" CONCRETE SIDEWALK (UNPIGMENTED)	2,231.00	S.F.				
018	4.13 BBS 7" CONCRETE SIDEWALK (PIGMENTED)	1,074.00	S.F.				

BID SCHEDULE FORM

COL. 1 SEQ. NO	COL. 2 ITEM NUMBER and DESCRIPTION	COL. 3 ENGINEER'S ESTIMATE OF QUANTITIY	COL. 4 UNIT	COL. 5 UNIT PRICE (IN FIGURES) DOLLARS	CTS	COL. 6 EXTENDED AMOUNT (IN FIGURES) DOLLARS	CTS
019	4.13 DE EMBEDDED PREFORMED DETECTABLE WARNING UNITS	428.00	S.F.				
020	4.14 W WELDED STEEL WIRE FABRIC	50.00	LBS.				
021	4.15 TOPSOIL	90.00	C.Y.				
022	4.15 SS STRUCTURAL SOIL FOUNDATION MATERIAL	100.00	C.Y.				
023	4.17 AC SHRUBS PLANTED, 18" TO 24" HIGH, ALL TYPES	120.00	EACH				
024	4.17 D3G SHRUBS PLANTED, DECIDUOUS, 3 GALLON, ALL TYPES	11.00	EACH				

BID SCHEDULE FORM

COL. 1 SEQ. NO	COL. 2 ITEM NUMBER and DESCRIPTION	COL. 3 ENGINEER'S ESTIMATE OF QUANTITIY	COL. 4 UNIT	COL. 5 UNIT PRICE (IN FIGURES) DOLLARS	CTS	COL. 6 EXTENDED AMOUNT (IN FIGURES) DOLLARS	CTS
025	4.18 A MAINTENANCE TREE PRUNING (UNDER 12" CAL.)	98.00	EACH				
026	4.18 B MAINTENANCE TREE PRUNING (12" TO UNDER 18" CAL.)	138.00	EACH				
027	4.18 C MAINTENANCE TREE PRUNING (18" TO UNDER 24" CAL.)	25.00	EACH				
028	4.18 D MAINTENANCE TREE PRUNING (24" CAL. AND OVER)	48.00	EACH				
029	4.21 TREE CONSULTANT	1,462.00	P/HR				
030	50.11CS040050 4'-0"W X 5'-0"H SINGLE BARREL FLAT TOP REINFORCED CONCRETE COMBINED SEWER	525.00	L.F.				

BID SCHEDULE FORM

COL. 1 SEQ. NO	COL. 2 ITEM NUMBER and DESCRIPTION	COL. 3 ENGINEER'S ESTIMATE OF QUANTITIY	COL. 4 UNIT	COL. 5 UNIT PRICE (IN FIGURES) DOLLARS	CTS	COL. 6 EXTENDED AMOUNT (IN FIGURES) DOLLARS	CTS
031	**50.11CS046050** 4'-6"W X 5'-0"H SINGLE BARREL FLAT TOP REINFORCED CONCRETE COMBINED SEWER	540.00	L.F.				
032	**50.21C3C024D** 24" R.C.P. CLASS III COMBINED SEWER, ON CONCRETE CRADLE	1,015.00	L.F.				
033	**50.21C3C030D** 30" R.C.P. CLASS III COMBINED SEWER, ON CONCRETE CRADLE	760.00	L.F.				
034	**50.21C4C054D** 54" R.C.P. CLASS IV COMBINED SEWER, ON CONCRETE CRADLE	265.00	L.F.				
035	**50.21C4C060D** 60" R.C.P. CLASS IV COMBINED SEWER, ON CONCRETE CRADLE	24.00	L.F.				
036	**50.31CC15** 15" E.S.V.P. COMBINED SEWER, ON CONCRETE CRADLE	1,100.00	L.F.				

BID SCHEDULE FORM

COL. 1 SEQ. NO	COL. 2 ITEM NUMBER and DESCRIPTION	COL. 3 ENGINEER'S ESTIMATE OF QUANTITTY	COL. 4 UNIT	COL. 5 UNIT PRICE (IN FIGURES) DOLLARS	CTS	COL. 6 EXTENDED AMOUNT (IN FIGURES) DOLLARS	CTS
037	**50.31CC18** 18" E.S.V.P. COMBINED SEWER, ON CONCRETE CRADLE	730.00	L.F.				
038	**50.41C6E16** 16" D.I.P. CLASS 56 COMBINED SEWER, ENCASED IN CONCRETE	45.00	L.F.				
039	**50.41C6E20** 20" D.I.P. CLASS 56 COMBINED SEWER, ENCASED IN CONCRETE	65.00	L.F.				
040	**50.41C6E24** 24" D.I.P. CLASS 56 COMBINED SEWER, ENCASED IN CONCRETE	55.00	L.F.				
041	**51.11C001** CHAMBER NO. 1	1.00	EACH				
042	**51.11C002** CHAMBER NO. 2	1.00	EACH				

BID SCHEDULE FORM

COL. 1 SEQ. NO	COL. 2 ITEM NUMBER and DESCRIPTION	COL. 3 ENGINEER'S ESTIMATE OF QUANTITIY	COL. 4 UNIT	COL. 5 UNIT PRICE (IN FIGURES) DOLLARS	CTS	COL. 6 EXTENDED AMOUNT (IN FIGURES) DOLLARS	CTS
043	51.11C003 CHAMBER NO. 3	1.00	EACH				
044	51.11C004 CHAMBER NO. 4	1.00	EACH				
045	51.11P004 STANDARD 4'-0" DIAMETER PRECAST MANHOLE	2.00	EACH				
046	51.11P008 STANDARD 8'-0" DIAMETER PRECAST MANHOLE	2.00	EACH				
047	51.21A000000C ACCESS MANHOLE	7.00	EACH				
048	51.21S0A1000V STANDARD MANHOLE TYPE A-1	28.00	EACH				

BID SCHEDULE FORM

COL. 1 SEQ. NO	COL. 2 ITEM NUMBER and DESCRIPTION	COL. 3 ENGINEER'S ESTIMATE OF QUANTITIY	COL. 4 UNIT	COL. 5 UNIT PRICE (IN FIGURES) DOLLARS	CTS	COL. 6 EXTENDED AMOUNT (IN FIGURES) DOLLARS	CTS
049	51.21S0A2000V STANDARD MANHOLE TYPE A-2	2.00	EACH				
050	51.21S0C2060R STANDARD MANHOLE TYPE C-2 ON 60" R.C.P. SEWER	1.00	EACH				
051	51.23RF REPLACEMENT OF EXISTING MANHOLE FRAME AND COVER	2.00	EACH				
052	51.41S001 STANDARD CATCH BASIN, TYPE 1	45.00	EACH				
053	51.42S1SO INCREMENTAL COST OF STANDARD CATCH BASIN TYPE 3 WITH CURB PIECE IN LIEU OF STANDARD CATCH BASIN TYPE 1	8.00	EACH				
054	52.11D12 12" DUCTILE IRON PIPE BASIN CONNECTION	805.00	L.F.				

BID SCHEDULE FORM

COL. 1 SEQ. NO	COL. 2 ITEM NUMBER and DESCRIPTION	COL. 3 ENGINEER'S ESTIMATE OF QUANTITIY	COL. 4 UNIT	COL. 5 UNIT PRICE (IN FIGURES) DOLLARS	CTS	COL. 6 EXTENDED AMOUNT (IN FIGURES) DOLLARS	CTS
055	52.31V06C15 6" E.S.V.P. SPUR FOR HOUSE CONNECTION ON 15" E.S.V.P. COMBINED SEWER	68.00	EACH				
056	52.31V06C18 6" E.S.V.P. SPUR FOR HOUSE CONNECTION ON 18" E.S.V.P. COMBINED SEWER	60.00	EACH				
057	52.31V08C15 8" E.S.V.P. SPUR FOR HOUSE CONNECTION ON 15" E.S.V.P. COMBINED SEWER	3.00	EACH				
058	52.41D06R 6" D.I.P. HOUSE CONNECTION DRAIN ON CONCRETE CRADLE (RECONNECTION)	3,770.00	L.F.				
059	52.41D08R 8" D.I.P. HOUSE CONNECTION DRAIN ON CONCRETE CRADLE (RECONNECTION)	130.00	L.F.				
060	52.41V06R 6" E.S.V.P. HOUSE CONNECTION DRAIN ON CONCRETE CRADLE (RECONNECTION)	500.00	L.F.				

BID SCHEDULE FORM

COL. 1 SEQ. NO	COL. 2 ITEM NUMBER and DESCRIPTION	COL. 3 ENGINEER'S ESTIMATE OF QUANTITY	COL. 4 UNIT	COL. 5 UNIT PRICE (IN FIGURES) DOLLARS	CTS	COL. 6 EXTENDED AMOUNT (IN FIGURES) DOLLARS	CTS
061	52.41V08R 8" E.S.V.P. HOUSE CONNECTION DRAIN ON CONCRETE CRADLE (RECONNECTION)	100.00	L.F.				
062	52.51RP REMOVAL OF PROTRUDING SERVICE CONNECTIONS	1.00	EACH				
063	52.61RC RE-OPENING OF SERVICE CONNECTIONS	1.00	EACH				
064	53.11DR TELEVISION INSPECTION AND DIGITAL AUDIO-VISUAL RECORDING OF SEWERS	3,970.00	L.F.				
065	6.02 AAN UNCLASSIFIED EXCAVATION	4,286.00	C.Y.				
066	6.02 XHEC INCREMENTAL COST FOR MODIFYING WORK METHODS NEAR (WITHIN 3 FEET OF) TRANSIT FACILITIES AND BUILDING VAULTS	2,703.00	C.Y.				

BID SCHEDULE FORM

COL. 1 SEQ. NO	COL. 2 ITEM NUMBER and DESCRIPTION	COL. 3 ENGINEER'S ESTIMATE OF QUANTITIY	COL. 4 UNIT	COL. 5 UNIT PRICE (IN FIGURES) DOLLARS	CTS	COL. 6 EXTENDED AMOUNT (IN FIGURES) DOLLARS	CTS
067	**6.02 XSCW** INCREMENTAL COST FOR USING SPECIAL CARE WORK METHODS NEAR (FROM 3 FEET TO 50 FEET) TRANSIT FACILITIES	1,074.00	C.Y.				
068	**6.03 AA** STRIPPING PAVEMENT SURFACE (ASPHALTIC CONCRETE)	94.00	S.Y.				
069	**6.18 W** WICKET FENCE (12" HIGH)	220.00	L.F.				
070	**6.22 F** ADDITIONAL HARDWARE	110.00	LBS.				
071	**6.23 AB** REMOVE EXISTING FIRE ALARM POST	3.00	EACH				
072	**6.23 BA** FURNISH AND INSTALL FIRE ALARM POST AND SUBBASE IN ACCORDANCE WITH F.D. STD. DWG. #141	3.00	EACH				

BID SCHEDULE FORM

COL. 1 SEQ. NO	COL. 2 ITEM NUMBER and DESCRIPTION	COL. 3 ENGINEER'S ESTIMATE OF QUANTITY	COL. 4 UNIT	COL. 5 UNIT PRICE (IN FIGURES) DOLLARS	CTS	COL. 6 EXTENDED AMOUNT (IN FIGURES) DOLLARS	CTS
073	**6.23 BD** FURNISH AND INSTALL 4-PAIR FIRE ALARM CABLE	1,560.00	L.F.				
074	**6.23 BFB** FURNISH AND INSTALL FIRE DEPARTMENT 24 WIRE TERMINAL BOX AND TERMINATE FIRE ALARM CABLES	3.00	EACH				
075	**6.23 BGSE** FURNISH AND INSTALL 4" P.V.C. CONDUIT, SCHEDULE 40, U.L. 651 (WITH PAVEMENT EXCAVATION)	62.00	L.F.				
076	**6.23 BHE** FURNISH AND INSTALL 4" 90-DEGREE P.V.C. WIDE BEND, SCHEDULE 40, U.L. 651 (WITH PAVEMENT EXCAVATION) IN ACCORDANCE WITH F.D. STD. DWG. #141 OR #145AA	3.00	EACH				
077	**6.23 BP** FURNISH AND INSTALL FIRE ALARM PEDESTAL BUMPERS (2 REQUIRED PER SET) IN ACCORDANCE WITH F.D. STD. DWG. #168	3.00	SETS				
078	**6.23 DDE** FURNISH AND INSTALL 40 PAIR FIRE ALARM CABLE	540.00	L.F.				

BID SCHEDULE FORM

COL. 1 SEQ. NO	COL. 2 ITEM NUMBER and DESCRIPTION	COL. 3 ENGINEER'S ESTIMATE OF QUANTITIY	COL. 4 UNIT	COL. 5 UNIT PRICE (IN FIGURES) DOLLARS	CTS	COL. 6 EXTENDED AMOUNT (IN FIGURES) DOLLARS	CTS
079	6.25 RS TEMPORARY SIGNS	5,898.00	S.F.				
080	6.26 TIMBER CURB	25,926.00	L.F.				
081	6.27 DBH DEMOLITION, REMOVAL AND DISPOSAL OF BENCHES	3.00	EACH				
082	6.28 AA LIGHTED TIMBER BARRICADES	3,710.00	L.F.				
083	6.29 TTM TEMPORARY TUBULAR MARKERS	350.00	EACH				
084	6.36 DR STRUCTURAL REPAIR AND ADJUSTMENT OF UTILITY STRUCTURES	6.00	C.Y.				

BID SCHEDULE FORM

COL. 1 SEQ. NO	COL. 2 ITEM NUMBER and DESCRIPTION	COL. 3 ENGINEER'S ESTIMATE OF QUANTITIY	COL. 4 UNIT	COL. 5 UNIT PRICE (IN FIGURES) DOLLARS	CTS	COL. 6 EXTENDED AMOUNT (IN FIGURES) DOLLARS	CTS
085	6.40 D ENGINEER'S FIELD OFFICE (TYPE D)	48.00	MONTH				
086	6.43 PHOTOGRAPHS	100.00	SETS				
087	6.44 THERMOPLASTIC REFLECTORIZED PAVEMENT MARKINGS (4" WIDE)	37,934.00	L.F.				
088	6.49 TEMPORARY PAVEMENT MARKINGS (4" WIDE)	31,230.00	L.F.				
089	6.52 CG CROSSING GUARD	7,580.00	P/HR				
090	6.53 REMOVE EXISTING LANE MARKINGS (4" WIDE)	25,290.00	L.F.				

BID SCHEDULE FORM

COL. 1 SEQ. NO	COL. 2 ITEM NUMBER and DESCRIPTION	COL. 3 ENGINEER'S ESTIMATE OF QUANTITY	COL. 4 UNIT	COL. 5 UNIT PRICE (IN FIGURES) DOLLARS	CTS	COL. 6 EXTENDED AMOUNT (IN FIGURES) DOLLARS	CTS
091	6.55 SAWCUTTING EXISTING PAVEMENT	17,179.00	L.F.				
092	6.59 P TEMPORARY CONCRETE BARRIER	15,602.00	L.F.				
093	6.59 PF TEMPORARY CONCRETE BARRIER WITH FENCE	950.00	L.F.				
094	6.82 A REMOVING EXISTING TRAFFIC AND STREET NAME SIGNS	60.00	S.F.				
095	6.82 B REMOVING EXISTING TRAFFIC AND STREET NAME SIGN POSTS	53.00	L.F.				
096	6.83 AA FURNISHING NEW NON-REFLECTORIZED TRAFFIC SIGNS	9.00	S.F.				

BID SCHEDULE FORM

COL. 1 SEQ. NO	COL. 2 ITEM NUMBER and DESCRIPTION	COL. 3 ENGINEER'S ESTIMATE OF QUANTITY	COL. 4 UNIT	COL. 5 UNIT PRICE (IN FIGURES) DOLLARS	CTS	COL. 6 EXTENDED AMOUNT (IN FIGURES) DOLLARS	CTS
097	6.83 AB FURNISHING NEW TRAFFIC SIGN POSTS	53.00	L.F.				
098	6.83 AR FURNISHING NEW REFLECTORIZED TRAFFIC SIGNS	41.00	S.F.				
099	6.83 BA INSTALLING TRAFFIC SIGNS	49.00	S.F.				
100	6.83 BB INSTALLING TRAFFIC SIGN POSTS	53.00	L.F.				
101	6.84 B LOLLIPOP TYPE BUS STOP SIGNS PRICE BID SHALL BE FOR THE FIXED SUM OF $ 3,500.00	1.00	F.S.	3,500	00	$3,500	00

Department of Design and Construction

NEW YORK CITY DEPARTMENT OF DESIGN AND CONSTRUCTION
DIVISION OF INFRASTRUCTURE - BUREAU OF DESIGN

PROJECT ID: BED798
CONTRACT PIN: 8502017WM0008C

12/29/2016 2:29 PM

BID SCHEDULE FORM

COL. 1 SEQ. NO	COL. 2 ITEM NUMBER and DESCRIPTION	COL. 3 ENGINEER'S ESTIMATE OF QUANTITTY	COL. 4 UNIT	COL. 5 UNIT PRICE (IN FIGURES) DOLLARS	CTS	COL. 6 EXTENDED AMOUNT (IN FIGURES) DOLLARS	CTS
102	6.85 A TRAFFIC ENFORCEMENT AGENTS PRICE BID SHALL BE FOR THE FIXED SUM OF $ 823,935.08	1.00	F.S.	823,935	08	$823,935	08
103	6.86 AA FURNISHING NEW STREET NAME SIGNS	14.00	S.F.				
104	6.86 BA INSTALLING STREET NAME SIGNS	14.00	S.F.				
105	6.87 PLASTIC BARRELS	6,236.00	EACH				
106	6.91 REFLECTIVE CRACKING MEMBRANE (18" WIDE)	832.00	L.F.				

BID SCHEDULE FORM

COL. 1 SEQ. NO	COL. 2 ITEM NUMBER and DESCRIPTION	COL. 3 ENGINEER'S ESTIMATE OF QUANTITY	COL. 4 UNIT	COL. 5 UNIT PRICE (IN FIGURES) DOLLARS	CTS	COL. 6 EXTENDED AMOUNT (IN FIGURES) DOLLARS	CTS
107	6.97 A EXTRA-HIGH-EARLY STRENGTH CONCRETE	500.00	C.Y.				
108	6.99 AUDIO AND VIDEO DOCUMENTATION SURVEY	1.00	L.S.				
109	60.11R516 FURNISHING AND DELIVERING 16-INCH DUCTILE IRON RESTRAINED JOINT PIPE (CLASS 55)	39.00	L.F.				
110	60.11R520 FURNISHING AND DELIVERING 20-INCH DUCTILE IRON RESTRAINED JOINT PIPE (CLASS 55)	2,046.00	L.F.				
111	60.11R606 FURNISHING AND DELIVERING 6-INCH DUCTILE IRON RESTRAINED JOINT PIPE (CLASS 56)	349.00	L.F.				
112	60.11R608 FURNISHING AND DELIVERING 8-INCH DUCTILE IRON RESTRAINED JOINT PIPE (CLASS 56)	2,860.00	L.F.				

BID SCHEDULE FORM

COL. 1 SEQ. NO	COL. 2 ITEM NUMBER and DESCRIPTION	COL. 3 ENGINEER'S ESTIMATE OF QUANTITIY	COL. 4 UNIT	COL. 5 UNIT PRICE (IN FIGURES) DOLLARS	CTS	COL. 6 EXTENDED AMOUNT (IN FIGURES) DOLLARS	CTS
113	**60.11R612** FURNISHING AND DELIVERING 12-INCH DUCTILE IRON RESTRAINED JOINT PIPE (CLASS 56)	1,105.00	L.F.				
114	**60.12D06** LAYING 6-INCH DUCTILE IRON PIPE AND FITTINGS	385.00	L.F.				
115	**60.12D08** LAYING 8-INCH DUCTILE IRON PIPE AND FITTINGS	2,975.00	L.F.				
116	**60.12D12** LAYING 12-INCH DUCTILE IRON PIPE AND FITTINGS	1,220.00	L.F.				
117	**60.12D16** LAYING 16-INCH DUCTILE IRON PIPE AND FITTINGS	49.00	L.F.				
118	**60.12D20** LAYING 20-INCH DUCTILE IRON PIPE AND FITTINGS	2,220.00	L.F.				

BID SCHEDULE FORM

COL. 1 SEQ. NO	COL. 2 ITEM NUMBER and DESCRIPTION	COL. 3 ENGINEER'S ESTIMATE OF QUANTITTY	COL. 4 UNIT	COL. 5 UNIT PRICE (IN FIGURES) DOLLARS	CTS	COL. 6 EXTENDED AMOUNT (IN FIGURES) DOLLARS	CTS
119	**60.13M0A24** FURNISHING AND DELIVERING DUCTILE IRON MECHANICAL JOINT 24 -INCH DIAMETER AND SMALLER FITTINGS, INCLUDING WEDGE TYPE RETAINER GLANDS	42.95	TONS				
120	**60.18BJC20EL** FURNISHING, DELIVERING AND INSTALLING BELL JOINT CLAMPS, COMPLETE FOR 20-INCH PIPE AND LESS	16.00	EACH				
121	**60.21SP4T48** FURNISHING, DELIVERING AND LAYING 48-INCH STRAIGHT STEEL PIPE, 1/2-INCH WALL THICKNESS	90.00	L.F.				
122	**60.21SP6T72** FURNISHING, DELIVERING AND LAYING 72-INCH STRAIGHT STEEL PIPE, 3/4-INCH WALL THICKNESS	4,692.00	L.F.				
123	**60.22BR4T48** FURNISHING, DELIVERING AND LAYING 48-INCH STEEL BENDS AND REDUCERS, 1/2-INCH WALL THICKNESS	28.00	L.F.				
124	**60.22BR6T72** FURNISHING, DELIVERING AND LAYING 72-INCH STEEL BENDS AND REDUCERS, 3/4-INCH WALL THICKNESS	182.00	L.F.				

BID SCHEDULE FORM

COL. 1 SEQ. NO	COL. 2 ITEM NUMBER and DESCRIPTION	COL. 3 ENGINEER'S ESTIMATE OF QUANTITTY	COL. 4 UNIT	COL. 5 UNIT PRICE (IN FIGURES) DOLLARS	CTS	COL. 6 EXTENDED AMOUNT (IN FIGURES) DOLLARS	CTS
125	**60.25PSO** FURNISHING, DELIVERING AND INSTALLING PLATE STEEL OUTLETS ON STEEL PIPE, ACCESS MANHOLE OUTLETS WITH COVERS, AND NUTS AND BOLTS COMPLETE	15,300.00	LBS.				
126	**60.27RSC48** FURNISHING, DELIVERING AND INSTALLING 48-INCH DIAMETER BOLTED, SPLIT SLEEVE-TYPE RESTRAINED COUPLING	2.00	EACH				
127	**60.27RSC72** FURNISHING, DELIVERING AND INSTALLING 72-INCH DIAMETER BOLTED, SPLIT SLEEVE-TYPE RESTRAINED COUPLING	1.00	EACH				
128	**60.29CP** FURNISHING, INSTALLING AND TESTING CORROSION CONTROL AND/OR CATHODIC PROTECTION SYSTEM	1.00	L.S.				
129	**61.11DFM06** FURNISHING AND DELIVERING 6-INCH FLANGED-MECHANICAL JOINT DUCTILE IRON GATE VALVE COMPLETE WITH WEDGE TYPE RETAINER GLAND	7.00	EACH				

BID SCHEDULE FORM

COL. 1 SEQ. NO	COL. 2 ITEM NUMBER and DESCRIPTION	COL. 3 ENGINEER'S ESTIMATE OF QUANTITY	COL. 4 UNIT	COL. 5 UNIT PRICE (IN FIGURES) DOLLARS	CTS	COL. 6 EXTENDED AMOUNT (IN FIGURES) DOLLARS	CTS
130	**61.11DFM20** FURNISHING AND DELIVERING 20-INCH FLANGED-MECHANICAL JOINT DUCTILE IRON GATE VALVE COMPLETE WITH WEDGE TYPE RETAINER GLAND	3.00	EACH				
131	**61.11DMM06** FURNISHING AND DELIVERING 6-INCH MECHANICAL JOINT DUCTILE IRON GATE VALVE COMPLETE WITH WEDGE TYPE RETAINER GLANDS	23.00	EACH				
132	**61.11DMM08** FURNISHING AND DELIVERING 8-INCH MECHANICAL JOINT DUCTILE IRON GATE VALVE COMPLETE WITH WEDGE TYPE RETAINER GLANDS	13.00	EACH				
133	**61.11DMM12** FURNISHING AND DELIVERING 12-INCH MECHANICAL JOINT DUCTILE IRON GATE VALVE COMPLETE WITH WEDGE TYPE RETAINER GLANDS	7.00	EACH				
134	**61.11DMM20** FURNISHING AND DELIVERING 20-INCH MECHANICAL JOINT DUCTILE IRON GATE VALVE COMPLETE WITH WEDGE TYPE RETAINER GLANDS	9.00	EACH				

BID SCHEDULE FORM

COL. 1 SEQ. NO	COL. 2 ITEM NUMBER and DESCRIPTION	COL. 3 ENGINEER'S ESTIMATE OF QUANTITIY	COL. 4 UNIT	COL. 5 UNIT PRICE (IN FIGURES) DOLLARS	CTS	COL. 6 EXTENDED AMOUNT (IN FIGURES) DOLLARS	CTS
135	**61.11TWC03** FURNISHING AND DELIVERING 3-INCH WET CONNECTION TAPPING VALVE COMPLETE WITH WEDGE TYPE RETAINER GLANDS	3.00	EACH				
136	**61.11TWC04** FURNISHING AND DELIVERING 4-INCH WET CONNECTION TAPPING VALVE COMPLETE WITH WEDGE TYPE RETAINER GLANDS	4.00	EACH				
137	**61.11TWC06** FURNISHING AND DELIVERING 6-INCH WET CONNECTION TAPPING VALVE COMPLETE WITH WEDGE TYPE RETAINER GLANDS	3.00	EACH				
138	**61.11TWC08** FURNISHING AND DELIVERING 8-INCH WET CONNECTION TAPPING VALVE COMPLETE WITH WEDGE TYPE RETAINER GLANDS	1.00	EACH				
139	**61.12DFM06** SETTING 6-INCH FLANGED-MECHANICAL JOINT DUCTILE IRON GATE VALVE COMPLETE WITH WEDGE TYPE RETAINER GLAND	7.00	EACH				
140	**61.12DFM20** SETTING 20-INCH FLANGED-MECHANICAL JOINT DUCTILE IRON GATE VALVE COMPLETE WITH WEDGE TYPE RETAINER GLAND	3.00	EACH				

BID SCHEDULE FORM

COL. 1 SEQ. NO	COL. 2 ITEM NUMBER and DESCRIPTION	COL. 3 ENGINEER'S ESTIMATE OF QUANTITIY	COL. 4 UNIT	COL. 5 UNIT PRICE (IN FIGURES) DOLLARS	CTS	COL. 6 EXTENDED AMOUNT (IN FIGURES) DOLLARS	CTS
141	61.12DMM06 SETTING 6-INCH MECHANICAL JOINT DUCTILE IRON GATE VALVE COMPLETE WITH WEDGE TYPE RETAINER GLANDS	23.00	EACH				
142	61.12DMM08 SETTING 8-INCH MECHANICAL JOINT DUCTILE IRON GATE VALVE COMPLETE WITH WEDGE TYPE RETAINER GLANDS	13.00	EACH				
143	61.12DMM12 SETTING 12-INCH MECHANICAL JOINT DUCTILE IRON GATE VALVE COMPLETE WITH WEDGE TYPE RETAINER GLANDS	7.00	EACH				
144	61.12DMM20 SETTING 20-INCH MECHANICAL JOINT DUCTILE IRON GATE VALVE COMPLETE WITH WEDGE TYPE RETAINER GLANDS	9.00	EACH				
145	61.12TWC03 SETTING 3-INCH WET CONNECTION TAPPING VALVE COMPLETE WITH WEDGE TYPE RETAINER GLANDS	3.00	EACH				
146	61.12TWC04 SETTING 4-INCH WET CONNECTION TAPPING VALVE COMPLETE WITH WEDGE TYPE RETAINER GLANDS	4.00	EACH				

BID SCHEDULE FORM

COL. 1 SEQ. NO	COL. 2 ITEM NUMBER and DESCRIPTION	COL. 3 ENGINEER'S ESTIMATE OF QUANTITIY	COL. 4 UNIT	COL. 5 UNIT PRICE (IN FIGURES) DOLLARS	CTS	COL. 6 EXTENDED AMOUNT (IN FIGURES) DOLLARS	CTS
147	**61.12TWC06** SETTING 6-INCH WET CONNECTION TAPPING VALVE COMPLETE WITH WEDGE TYPE RETAINER GLANDS	3.00	EACH				
148	**61.12TWC08** SETTING 8-INCH WET CONNECTION TAPPING VALVE COMPLETE WITH WEDGE TYPE RETAINER GLANDS	1.00	EACH				
149	**61.21BVB48** FURNISHING, DELIVERING AND INSTALLING 48-INCH BUTTERFLY VALVE WITH BY-PASS ARRANGEMENT AND OUTLET, COMPLETE	2.00	EACH				
150	**61.21BVB72** FURNISHING, DELIVERING AND INSTALLING 72-INCH BUTTERFLY VALVE WITH BY-PASS ARRANGEMENT AND OUTLET, COMPLETE	1.00	EACH				
151	**61.31PV20** FURNISHING, DELIVERING AND INSTALLING 20-INCH PRESSURE REGULATOR VALVE	1.00	EACH				
152	**62.11SD** FURNISHING AND DELIVERING HYDRANTS	15.00	EACH				

BID SCHEDULE FORM

COL. 1 SEQ. NO	COL. 2 ITEM NUMBER and DESCRIPTION	COL. 3 ENGINEER'S ESTIMATE OF QUANTITY	COL. 4 UNIT	COL. 5 UNIT PRICE (IN FIGURES) DOLLARS	CTS	COL. 6 EXTENDED AMOUNT (IN FIGURES) DOLLARS	CTS
153	62.11SS FURNISHING AND DELIVERING HYDRANTS - SMITH TYPE (S-2-LP)	13.00	EACH				
154	62.12SG SETTING HYDRANTS COMPLETE WITH WEDGE TYPE RETAINER GLANDS	28.00	EACH				
155	62.13RH REMOVING HYDRANTS	22.00	EACH				
156	62.14FD FURNISHING, DELIVERING AND INSTALLING HYDRANT FENDERS WITH DECORATIVE CAPS (BLACK)	34.00	EACH				
157	62.14FS FURNISHING, DELIVERING AND INSTALLING HYDRANT FENDERS	39.00	EACH				
158	63.11MH FURNISHING, DELIVERING AND INSTALLING 36-INCH CAST IRON MANHOLE HEADS AND COVERS	7.00	TONS				

BID SCHEDULE FORM

COL. 1 SEQ. NO	COL. 2 ITEM NUMBER and DESCRIPTION	COL. 3 ENGINEER'S ESTIMATE OF QUANTITIY	COL. 4 UNIT	COL. 5 UNIT PRICE (IN FIGURES) DOLLARS	CTS	COL. 6 EXTENDED AMOUNT (IN FIGURES) DOLLARS	CTS
159	**63.11MS** FURNISHING, DELIVERING AND INSTALLING MANHOLE STEPS TYPE PS2-PF	155.00	EACH				
160	**63.11VC** FURNISHING AND DELIVERING VARIOUS CASTINGS	51.00	TONS				
161	**64.11EL** WITHDRAWING AND REPLACING HOUSE SERVICES USING 1-1/2-INCH OR LARGER SCREW TAPS	171.00	EACH				
162	**64.11ST** WITHDRAWING AND REPLACING HOUSE SERVICES USING SMALLER THAN 1-1/2-INCH SCREW TAPS	37.00	EACH				
163	**64.12COEG** CUTTING AND OFFSETTING HOUSE SERVICE WATER CONNECTIONS (EQUAL TO OR GREATER THAN 3-INCH DIAMETER)	175.00	L.F.				
164	**64.12COLT** CUTTING AND OFFSETTING HOUSE SERVICE WATER CONNECTIONS (LESS THAN 3-INCH DIAMETER)	3,400.00	L.F.				

BID SCHEDULE FORM

COL. 1 SEQ. NO	COL. 2 ITEM NUMBER and DESCRIPTION	COL. 3 ENGINEER'S ESTIMATE OF QUANTITTY	COL. 4 UNIT	COL. 5 UNIT PRICE (IN FIGURES) DOLLARS	CTS	COL. 6 EXTENDED AMOUNT (IN FIGURES) DOLLARS	CTS
165	**64.12ESEG** EXTENDING HOUSE SERVICE WATER CONNECTIONS (EQUAL TO OR GREATER THAN 3-INCH DIAMETER)	50.00	L.F.				
166	**64.12ESLT** EXTENDING HOUSE SERVICE WATER CONNECTIONS (LESS THAN 3-INCH DIAMETER)	150.00	L.F.				
167	**64.13WC08** FURNISHING, DELIVERING AND INSTALLING WET CONNECTION SLEEVE ON 8-INCH WATER MAIN PIPE WITH VARIOUS OUTLETS	4.00	EACH				
168	**64.13WC12** FURNISHING, DELIVERING AND INSTALLING WET CONNECTION SLEEVE ON 12-INCH WATER MAIN PIPE WITH VARIOUS OUTLETS	2.00	EACH				
169	**64.13WC20** FURNISHING, DELIVERING AND INSTALLING WET CONNECTION SLEEVE ON 20-INCH WATER MAIN PIPE WITH VARIOUS OUTLETS	5.00	EACH				
170	**65.11BR** FURNISHING, DELIVERING AND INSTALLING BANDS, RODS, WASHERS, ETC., COMPLETE, FOR RESTRAINING JOINTS	4,951.00	LBS.				

BID SCHEDULE FORM

COL. 1 SEQ. NO	COL. 2 ITEM NUMBER and DESCRIPTION	COL. 3 ENGINEER'S ESTIMATE OF QUANTITIY	COL. 4 UNIT	COL. 5 UNIT PRICE (IN FIGURES) DOLLARS	CTS	COL. 6 EXTENDED AMOUNT (IN FIGURES) DOLLARS	CTS
171	**65.21PS** FURNISHING AND PLACING POLYETHYLENE SLEEVE **Unit price bid shall not be less than: $ 0.50**	1,465.00	L.F.				
172	**65.31FF** FURNISHING, DELIVERING AND PLACING FILTER FABRIC **Unit price bid shall not be less than: $ 0.10**	172,957.00	S.F.				
173	**65.41PS06** FURNISHING, DELIVERING AND INSTALLING 6-INCH PIPE-TO-WALL PENETRATION SEAL, INCLUDING STEEL SLEEVE AND ANCHOR/WATER STOP PLATE	4.00	EACH				
174	**65.41PS20** FURNISHING, DELIVERING AND INSTALLING 20-INCH PIPE-TO-WALL PENETRATION SEAL, INCLUDING STEEL SLEEVE AND ANCHOR/WATER STOP PLATE	5.00	EACH				
175	**65.41PS48** FURNISHING, DELIVERING AND INSTALLING 48-INCH PIPE-TO-WALL PENETRATION SEAL, INCLUDING STEEL SLEEVE AND ANCHOR/WATER STOP PLATE	4.00	EACH				

BID SCHEDULE FORM

COL. 1 SEQ. NO	COL. 2 ITEM NUMBER and DESCRIPTION	COL. 3 ENGINEER'S ESTIMATE OF QUANTITY	COL. 4 UNIT	COL. 5 UNIT PRICE (IN FIGURES) DOLLARS	CTS	COL. 6 EXTENDED AMOUNT (IN FIGURES) DOLLARS	CTS
176	**65.41PS72** FURNISHING, DELIVERING AND INSTALLING 72-INCH PIPE-TO-WALL PENETRATION SEAL, INCLUDING STEEL SLEEVE AND ANCHOR/WATER STOP PLATE	4.00	EACH				
177	**65.51PC** FURNISHING AND PLACING CAST-IN-PLACE CONCRETE CLASS 40 AND PRECAST CONCRETE CLASS 50	360.00	C.Y.				
178	**65.61SS** FURNISHING, DELIVERING AND PLACING STRUCTURAL, REINFORCING AND MISCELLANEOUS STEEL	40,200.00	LBS.				
179	**65.71SG** FURNISHING, DELIVERING AND PLACING SCREENED GRAVEL OR SCREENED BROKEN STONE BEDDING	4,721.00	C.Y.				
180	**7.13 B** MAINTENANCE OF SITE **Unit price bid shall not be less than: $ 8,000.00**	42.00	MONTH				
181	**7.19** LOAD TRANSFER JOINT	70.00	L.F.				

BID SCHEDULE FORM

COL. 1 SEQ. NO	COL. 2 ITEM NUMBER and DESCRIPTION	COL. 3 ENGINEER'S ESTIMATE OF QUANTITIY	COL. 4 UNIT	COL. 5 UNIT PRICE (IN FIGURES) DOLLARS	CTS	COL. 6 EXTENDED AMOUNT (IN FIGURES) DOLLARS	CTS
182	7.36 PEDESTRIAN STEEL BARRICADES	17,534.00	L.F.				
183	7.50 CB2 CITY BENCH WITH BACK (V 2)	6.00	EACH				
184	7.88 AA RODENT INFESTATION SURVEY AND MONITORING **Unit price bid shall not be less than: $ 5,551.00**	1.00	L.S.				
185	7.88 AB RODENT BAIT STATIONS **Unit price bid shall not be less than: $ 60.00**	10,859.00	EACH				
186	7.88 AC BAITING OF RODENT BAIT STATIONS **Unit price bid shall not be less than: $ 9.50**	10,859.00	EACH				
187	7.88 AD WATERBUG BAIT APPLICATIONS **Unit price bid shall not be less than: $ 65.00**	843.00	BLOCK				

BID SCHEDULE FORM

COL. 1 SEQ. NO	COL. 2 ITEM NUMBER and DESCRIPTION	COL. 3 ENGINEER'S ESTIMATE OF QUANTITIY	COL. 4 UNIT	COL. 5 UNIT PRICE (IN FIGURES) DOLLARS	CTS	COL. 6 EXTENDED AMOUNT (IN FIGURES) DOLLARS	CTS
188	70.21DK DECKING	3,758.00	S.Y.				
189	70.31FN FENCING **Unit price bid shall not be less than: $ 2.00**	31,273.00	L.F.				
190	70.51EO EXCAVATION OF BOULDERS IN OPEN CUT **Unit price bid shall not be less than: $ 75.00**	70.00	C.Y.				
191	70.61RE ROCK EXCAVATION	40.00	C.Y.				
192	70.71SB STONE BALLAST **Unit price bid shall not be less than: $ 15.00**	20.00	C.Y.				
193	70.81CB CLEAN BACKFILL **Unit price bid shall not be less than: $ 15.00**	7,458.00	C.Y.				

BID SCHEDULE FORM

COL. 1 SEQ. NO	COL. 2 ITEM NUMBER and DESCRIPTION	COL. 3 ENGINEER'S ESTIMATE OF QUANTITIY	COL. 4 UNIT	COL. 5 UNIT PRICE (IN FIGURES) DOLLARS	CTS	COL. 6 EXTENDED AMOUNT (IN FIGURES) DOLLARS	CTS
194	**70.91SW12** FURNISHING AND PLACING SHEETING AND BRACING IN TRENCH FOR WATER MAIN PIPE 12-INCH IN DIAMETER AND LESS	9,275.00	S.F.				
195	**70.91SW20** FURNISHING AND PLACING SHEETING AND BRACING IN TRENCH FOR WATER MAIN PIPE 20-INCH IN DIAMETER	26,219.00	S.F.				
196	**72.11HF** HYDRAULIC FILL FOR ABANDONED SEWERS AND WATER MAINS	2,210.00	C.Y.				
197	**73.11AB** ADDITIONAL BRICK MASONRY **Unit price bid shall not be less than: $ 62.50**	165.00	C.Y.				
198	**73.21AC** ADDITIONAL CONCRETE **Unit price bid shall not be less than: $ 62.50**	90.00	C.Y.				
199	**73.31AE0** ADDITIONAL EARTH EXCAVATION INCLUDING TEST PITS (ALL DEPTHS) **Unit price bid shall not be less than: $ 20.00**	966.00	C.Y.				

BID SCHEDULE FORM

COL. 1 SEQ. NO	COL. 2 ITEM NUMBER and DESCRIPTION	COL. 3 ENGINEER'S ESTIMATE OF QUANTITY	COL. 4 UNIT	COL. 5 UNIT PRICE (IN FIGURES) DOLLARS	CTS	COL. 6 EXTENDED AMOUNT (IN FIGURES) DOLLARS	CTS
200	73.41AG ADDITIONAL SELECT GRANULAR BACKFILL **Unit price bid shall not be less than: $ 15.00**	1,023.00	C.Y.				
201	73.51AS ADDITIONAL STEEL REINFORCING BARS **Unit price bid shall not be less than: $ 1.00**	200.00	LBS.				
202	73.61AT ADDITIONAL STONE BALLAST **Unit price bid shall not be less than: $ 15.00**	700.00	C.Y.				
203	75.11RT REMOVAL OF ABANDONED TRACKS	603.00	L.F.				
204	79.11AATA ALLOWANCE FOR ASBESTOS ABATEMENT WORK PERFORMED ON EXISTING TRANSIT AUTHORITY DUCT INSULATION (REMOVAL OF ACM, REPLACEMENT WITH NON-ACM, AND SUPPORT AND PROTECTION OF EXISTING TRANSIT AUTHORITY DUCT, COMPLETE) **PRICE BID SHALL BE FOR THE FIXED SUM OF $ 30,000.00**	1.00	F.S.	30,000	00	$30,000	00

BID SCHEDULE FORM

COL. 1 SEQ. NO	COL. 2 ITEM NUMBER and DESCRIPTION	COL. 3 ENGINEER'S ESTIMATE OF QUANTITIY	COL. 4 UNIT	COL. 5 UNIT PRICE (IN FIGURES) DOLLARS	CTS	COL. 6 EXTENDED AMOUNT (IN FIGURES) DOLLARS	CTS
205	8.01 C1 HANDLING, TRANSPORTING AND DISPOSAL OF NON-HAZARDOUS CONTAMINATED SOIL	6,000.00	TONS				
206	8.01 C2 SAMPLING AND TESTING OF CONTAMINATED/POTENTIALLY HAZARDOUS SOIL FOR DISPOSAL PURPOSES	20.00	SETS				
207	8.01 H HANDLING, TRANSPORTING AND DISPOSAL OF HAZARDOUS SOIL	500.00	TONS				
208	8.01 S HEALTH AND SAFETY	1.00	L.S.				
209	8.01 W1 REMOVAL, TREATMENT, AND DISCHARGE/DISPOSAL OF CONTAMINATED WATER	20.00	DAY				
210	8.01 W2 SAMPLING AND TESTING OF CONTAMINATED WATER	5.00	SETS				

BID SCHEDULE FORM

COL. 1 SEQ. NO	COL. 2 ITEM NUMBER and DESCRIPTION	COL. 3 ENGINEER'S ESTIMATE OF QUANTITIY	COL. 4 UNIT	COL. 5 UNIT PRICE (IN FIGURES) DOLLARS	CTS	COL. 6 EXTENDED AMOUNT (IN FIGURES) DOLLARS	CTS
211	8.02 A SPECIAL CARE EXCAVATION AND RESTORATION FOR SIDEWALK WORK	183.00	S.F.				
212	8.02 B SPECIAL CARE EXCAVATION AND RESTORATION FOR CURB WORK	105.00	L.F.				
213	8.08 VARIABLE MESSAGE BOARD	2.00	EACH				
214	9.04 HW ALLOWANCE FOR ANTI-FREEZE ADDITIVE IN CONCRETE PRICE BID SHALL BE FOR THE FIXED SUM OF $ 25,000.00	1.00	F.S.	25,000	00	$25,000	00
215	9.99 FLASHING ARROW BOARD	4.00	EACH				

BID SCHEDULE FORM

COL. 1 SEQ. NO	COL. 2 ITEM NUMBER and DESCRIPTION	COL. 3 ENGINEER'S ESTIMATE OF QUANTITY	COL. 4 UNIT	COL. 5 UNIT PRICE (IN FIGURES) DOLLARS	CTS	COL. 6 EXTENDED AMOUNT (IN FIGURES) DOLLARS	CTS
216	**M4.16 STUMP** STUMP REMOVAL	1.00	EACH				
217	**PK-444GP** GRANITE PLINTH WITH PLAQUE	1.00	EACH				
218	**SL-20.01.01** FURNISH AND INSTALL FOUNDATION FOR TYPE "B" OR "B12" POST WITH INTERNAL FLANGE, AS PER DRAWING E-3884	3.00	EACH				
219	**SL-20.02.02** FURNISH AND INSTALL STANDARD TYPE ANCHOR BOLT FOUNDATION, AS PER DRAWING E-3788	1.00	EACH				
220	**SL-20.07.02** ROTOR FOUNDATION. FURNISH AND INSTALL RIGID CONDUIT BEND, SIZE AS ORDERED.	1.00	EACH				
221	**SL-20.08.02** REMOVE FOUNDATION OTHER THAN STANDARD TYPE.	3.00	EACH				

BID SCHEDULE FORM

COL. 1 SEQ. NO	COL. 2 ITEM NUMBER and DESCRIPTION	COL. 3 ENGINEER'S ESTIMATE OF QUANTITIY	COL. 4 UNIT	COL. 5 UNIT PRICE (IN FIGURES) DOLLARS	CTS	COL. 6 EXTENDED AMOUNT (IN FIGURES) DOLLARS	CTS
222	SL-21.01.08 FURNISH AND INSTALL TYPE "B12" LAMPPOST WITH INTERNAL FLANGE	3.00	EACH				
223	SL-21.04.06 FURNISH AND INSTALL "FLATBUSH AVENUE" LAMPPOST WITH OCTAGONAL TRANSFORMER BASE	1.00	EACH				
224	SL-21.09.01 REMOVE PARK TYPE LAMPPOST ON FOUNDATION, WITH ALL ATTACHMENTS, IF ANY.	3.00	EACH				
225	SL-21.09.08 REMOVE ALL STREET LIGHTING EQUIPMENT FROM TYPE "M-2" TRAFFIC POST (ARM(S), PHOTOELECTRIC CONTROLLER, LUMINAIRE (S), SHAFT EXTENSION, WIRING, ETC.)	1.00	EACH				
226	SL-21.09.09 REMOVE F.S. SPUN ALUMINUM, #10, ETC LAMPPOST, WITH ARMS(S), LUMINAIRE(S), ETC., WITH ALL ATTACHMENTS, IF ANY. REMOVE PORTION OF FOUNDATION. RESTORE TO SURROUNDING CONDITIONS.	1.00	EACH				

BID SCHEDULE FORM

COL. 1 SEQ. NO	COL. 2 ITEM NUMBER and DESCRIPTION	COL. 3 ENGINEER'S ESTIMATE OF QUANTITY	COL. 4 UNIT	COL. 5 UNIT PRICE (IN FIGURES) DOLLARS	CTS	COL. 6 EXTENDED AMOUNT (IN FIGURES) DOLLARS	CTS
227	SL-22.15.03 FURNISH AND INSTALL 75 WATT LED "RIVERSIDE PARK" TYPE LUMINAIRE	3.00	EACH				
228	SL-22.16.07 FURNISH AND INSTALL PENDANT TYPE (TEAR DROP) LED FIXTURE	2.00	EACH				
229	SL-24.04.15 INSTALL ORNAMENTAL (TYPE, "BC", "M", "5TH AVE.", "LYRE", "CPW", "GCPW", ETC.) SHAFT EXTENSION/ARM(S) ASSEMBLY FOR M-2 TRAFFIC LAMPPOST.	1.00	EACH				
230	SL-24.04.26 FURNISH TYPE "FLATBUSH AVE" SINGLE ARM EXTENSION/ARM ASSEMBLY WITH PEC RECEPTACLE FOR M-2 TRAFFIC POLE.	1.00	EACH				
231	SL-26.01.04 FURNISH AND INSTALL LONG LIFE PHOTO ELECTRIC CONTROL WITH SURGE PROTECTION FOR LED LIGHT	2.00	EACH				
232	SL-27.01.01 FURNISH AND INSTALL ALUMINUM TAG ON A LAMPPOST, AS PER DRAWING D-2861	3.00	EACH				

BID SCHEDULE FORM

COL. 1 SEQ. NO	COL. 2 ITEM NUMBER and DESCRIPTION	COL. 3 ENGINEER'S ESTIMATE OF QUANTITY	COL. 4 UNIT	COL. 5 UNIT PRICE (IN FIGURES) DOLLARS	CTS	COL. 6 EXTENDED AMOUNT (IN FIGURES) DOLLARS	CTS
233	SL-28.01.01 FURNISH AND INSTALL COPPER WELD GROUND ROD AND CLAMP, AS PER DRAWING H-5019	1.00	EACH				
234	SL-33.01.02 FURNISH AND INSTALL NO. 6 AWG XLP COPPER CABLE OR EQUAL IN CONDUIT	374.00	L.F.				
235	SL-33.03.01 FURNISH AND INSTALL #6 BARE COPPER CONDUCTOR IN CONDUIT OR OVERHEAD.	187.00	L.F.				
236	SL-35.01.03 FURNISH AND INSTALL 1-1/2" HOT DIPPED GALVANIZED STEEL CONDUIT IN PAVED AREA.	110.00	L.F.				
237	SL-35.03.03 FURNISH AND INSTALL 1-1/2" HOT DIPPED GALVANIZED STEEL CONDUIT IN UNPAVED AREA	55.00	L.F.				
238	SL-35.03.04 FURNISH AND INSTALL 2" HOT DIPPED GALVANIZED STEEL CONDUIT IN UNPAVED AREA	22.00	L.F.				

BID SCHEDULE FORM

COL. 1 SEQ. NO	COL. 2 ITEM NUMBER and DESCRIPTION	COL. 3 ENGINEER'S ESTIMATE OF QUANTITIY	COL. 4 UNIT	COL. 5 UNIT PRICE (IN FIGURES) DOLLARS	CTS	COL. 6 EXTENDED AMOUNT (IN FIGURES) DOLLARS	CTS
239	SL-37.05.08 FURNISH AND INSTALL TYPE 1812 ROADWAY CONCRETE BOX WITH CAST IRON FRAME AND COVER WITH TAMPER PROOF BOLTS AS PER DWG J-3179B.	1.00	EACH				
240	T-1.1 INSTALL TYPE "S" OR "T" FOUNDATION	1.00	EACH				
241	T-1.18 REMOVE TYPE "A", "B", "S" OR "T" SERIES FOUNDATION	1.00	EACH				
242	T-1.20 REMOVE TYPE "M" SERIES FOUNDATION	2.00	EACH				
243	T-1.29 RAISE OR LOWER FOUNDATION TO GRADE	1.00	EACH				
244	T-1.3 INSTALL TYPE "M2-5S" FOUNDATION	2.00	EACH				

BID SCHEDULE FORM

COL. 1 SEQ. NO	COL. 2 ITEM NUMBER and DESCRIPTION	COL. 3 ENGINEER'S ESTIMATE OF QUANTITIY	COL. 4 UNIT	COL. 5 UNIT PRICE (IN FIGURES) DOLLARS	CTS	COL. 6 EXTENDED AMOUNT (IN FIGURES) DOLLARS	CTS
245	T-2.1 INSTALL TYPE "S-1" OR "T-1" SERIES POST	1.00	EACH				
246	T-2.16 FURNISH, INSTALL, MAINTAIN AND REMOVE TEMPORARY POST OR PYLON WITH SIGNALS	1.00	EACH				
247	T-2.22 REMOVE TYPE "S-1" OR "T-1" SERIES POST	1.00	EACH				
248	T-2.24 REMOVE TYPE "M" SERIES POST	2.00	EACH				
249	T-2.4 INSTALL TYPE "M-2" POST	2.00	EACH				
250	T-20000 FURNISH TEN FOOT ALUMINUM SIGNAL POST TYPE "S-1"	1.00	EACH				

BID SCHEDULE FORM

COL. 1 SEQ. NO	COL. 2 ITEM NUMBER and DESCRIPTION	COL. 3 ENGINEER'S ESTIMATE OF QUANTITIY	COL. 4 UNIT	COL. 5 UNIT PRICE (IN FIGURES) DOLLARS	CTS	COL. 6 EXTENDED AMOUNT (IN FIGURES) DOLLARS	CTS
251	T-20020 a) FURNISH 3/4" ANCHOR BOLT ASSEMBLIES FOR S-1 (EACH) (3 REQUIRED PER POST)	3.00	EACH				
252	T-20160 FURNISH 20 FOOT SIGNAL MAST ARM POLE ASSEMBLY TYPE "M-2"	2.00	EACH				
253	T-20220 c) FURNISH 1-1/4" ANCHOR BOLT ASSEMBLIES FOR M-2 (EACH) (4 REQUIRED PER POST)	8.00	EACH				
254	T-3.1 INSTALL "ONE-WAY" SIGNAL UNIT ON MAST ARM OR TOP OF TRAFFIC POST	5.00	EACH				
255	T-3.18 REMOVE SIGNAL HEAD FROM ANY TYPE POST	3.00	EACH				
256	T-3.2 INSTALL "ONE-WAY" SIGNAL UNIT ON THE SHAFT OF ANY POST	1.00	EACH				

BID SCHEDULE FORM

COL. 1 SEQ. NO	COL. 2 ITEM NUMBER and DESCRIPTION	COL. 3 ENGINEER'S ESTIMATE OF QUANTITY	COL. 4 UNIT	COL. 5 UNIT PRICE (IN FIGURES) DOLLARS	CTS	COL. 6 EXTENDED AMOUNT (IN FIGURES) DOLLARS	CTS
257	T-3.21 REMOVE PEDESTRIAN SIGNAL OR SIGN UNIT OR OTHER ILLUMINATED SIGNS FROM ANY POST	8.00	EACH				
258	T-3.6 INSTALL PEDESTRIAN SIGNAL ON ANY TYPE POST	8.00	EACH				
259	T-30013L FURNISH ADJUSTABLE 3 SECTION 1-WAY, DIE CAST ALUMINUM TRAFFIC SIGNALS 8" - W/LED LENS	6.00	EACH				
260	T-31200 e) "VB" ASSEMBLY *ASSEMBLY IS EQUAL TO ONE PAIR	1.00	EACH				
261	T-31210 h) "HUB" ASSEMBLY *ASSEMBLY IS EQUAL TO ONE PAIR	5.00	EACH				
262	T-31215 b) "2MS"	1.00	EACH				

BID SCHEDULE FORM

COL. 1 SEQ. NO	COL. 2 ITEM NUMBER and DESCRIPTION	COL. 3 ENGINEER'S ESTIMATE OF QUANTITIY	COL. 4 UNIT	COL. 5 UNIT PRICE (IN FIGURES) DOLLARS	CTS	COL. 6 EXTENDED AMOUNT (IN FIGURES) DOLLARS	CTS
263	T-31225 c) "3MS"	1.00	EACH				
264	T-31351 g) "VB-2P" ASSEMBLY *ASSEMBLY IS EQUAL TO ONE PAIR	4.00	EACH				
265	T-33000L FURNISH POLYCARBONATE INCANDESCENT PED SIGNAL W/LED LENS	4.00	EACH				
266	T-33001-L FURNISH POLYCARBONATE PEDESTRIAN SIGNAL (16 X 16) W/LED COUNT LENS (SPECIFICATION A-L)	4.00	EACH				
267	T-4.22 INSTALL ANY TYPE OF ADVANCED SOLID STATE TRAFFIC SIGNAL CONTROLLER AND CABINET ON METAL POLE	1.00	EACH				
268	T-4.23 INSTALL BATTERY BACK-UP POWER SUPPLY SYSTEM ON ANY POST	1.00	EACH				

BID SCHEDULE FORM

COL. 1 SEQ. NO	COL. 2 ITEM NUMBER and DESCRIPTION	COL. 3 ENGINEER'S ESTIMATE OF QUANTITIY	COL. 4 UNIT	COL. 5 UNIT PRICE (IN FIGURES) DOLLARS	CTS	COL. 6 EXTENDED AMOUNT (IN FIGURES) DOLLARS	CTS
269	T-4.8 REMOVE ONE CONTROL BOX AND CONTROLLER FROM ANY POST OR SUPPORT	1.00	EACH				
270	T-4.9 REMOVE CONTROL BOX FROM ANY POST OR SUPPORT	1.00	EACH				
271	T-5.32 RESTORING PERMANENT ROADWAY (INCLUDING SAWCUT)	370.00	L.F.				
272	T-5.50 FURNISH AND INSTALL 2" HDPE UNDERGROUND CONDUIT IN PAVED ROADWAY	370.00	L.F.				
273	T-6.1 INSTALL CABLE (INCLUDES OVERHEAD)	3,000.00	L.F.				
274	T-6.10 REMOVE CABLE (INCLUDES OVERHEAD)	3,000.00	L.F.				

BID SCHEDULE FORM

COL. 1 SEQ. NO	COL. 2 ITEM NUMBER and DESCRIPTION	COL. 3 ENGINEER'S ESTIMATE OF QUANTITIY	COL. 4 UNIT	COL. 5 UNIT PRICE (IN FIGURES) DOLLARS	CTS	COL. 6 EXTENDED AMOUNT (IN FIGURES) DOLLARS	CTS
275	T-6.2 INSTALL MULTIPLE CABLE (INCLUDES OVERHEAD)	2,000.00	L.F.				
276	T-60000B FURNISH 2 c # 10B (BREAKDOWN = 2#10 WITH 3RD WIRE FOR GROUNDING).	1,500.00	L.F.				
277	T-60040 c) 7 CONDUCTOR, 14 A.W.G.	1,000.00	L.F.				
278	T-60190 e) 13 CONDUCTOR, 14 A.W.G.	3,000.00	L.F.				
279	T-7.53 REMOVE (2418) HAND BOX OR PULL BOX IN PAVED SIDEWALK	1.00	EACH				
280	T-8.10 RELOCATE CONCRETE PYLON WITH POST	2.00	EACH				

BID SCHEDULE FORM

COL. 1 SEQ. NO	COL. 2 ITEM NUMBER and DESCRIPTION	COL. 3 ENGINEER'S ESTIMATE OF QUANTITIY	COL. 4 UNIT	COL. 5 UNIT PRICE (IN FIGURES) DOLLARS	CTS	COL. 6 EXTENDED AMOUNT (IN FIGURES) DOLLARS	CTS
281	T-8.8 INSTALL CONCRETE PYLON	2.00	EACH				
282	T-8.9 REMOVE CONCRETE PYLON	2.00	EACH				
283	T-81000 FURNISH CONCRETE PYLON	2.00	EACH				
284	UTL-6.01.1 GAS MAIN CROSSING SEWER UP TO 24" IN DIAMETER (S6.01) **Unit price bid shall not be less than: $ 1,040.00**	4.00	EACH				
285	UTL-6.01.14 GAS MAIN CROSSING WATER MAIN 72" IN DIAMETER (S6.01) **Unit price bid shall not be less than: $ 1,155.00**	11.00	EACH				
286	UTL-6.01.2 GAS MAIN CROSSING SEWER 30" IN DIAMETER (S6.01) **Unit price bid shall not be less than: $ 1,770.00**	2.00	EACH				

BID SCHEDULE FORM

COL. 1 SEQ. NO	COL. 2 ITEM NUMBER and DESCRIPTION	COL. 3 ENGINEER'S ESTIMATE OF QUANTITIY	COL. 4 UNIT	COL. 5 UNIT PRICE (IN FIGURES) DOLLARS	CTS	COL. 6 EXTENDED AMOUNT (IN FIGURES) DOLLARS	CTS
287	UTL-6.01.4 GAS MAIN CROSSING SEWER 48" THRU 54" IN DIAMETER (S6.01) **Unit price bid shall not be less than: $ 2,120.00**	1.00	EACH				
288	UTL-6.01.4Q GAS MAIN CROSSING 4'-0"W X 5'-0"H FLAT TOP REINFORCED CONCRETE COMBINED SEWER (S6.01) **Unit price bid shall not be less than: $ 2,300.00**	2.00	EACH				
289	UTL-6.01.4R GAS MAIN CROSSING 4'-6"W X 5'-0"H FLAT TOP REINFORCED CONCRETE COMBINED SEWER (S6.01) **Unit price bid shall not be less than: $ 2,300.00**	1.00	EACH				
290	UTL-6.01.8 GAS SERVICES CROSSING TRENCHES AND/OR EXCAVATIONS (S6.01) **Unit price bid shall not be less than: $ 465.00**	210.00	EACH				
291	UTL-6.01.9 GAS MAIN CROSSING WATER MAIN UP TO 20" IN DIAMETER (S6.01) **Unit price bid shall not be less than: $ 485.00**	13.00	EACH				
292	UTL-6.03 REMOVAL OF ABANDONED GAS FACILITIES. ALL SIZES. (S6.03) **Unit price bid shall not be less than: $ 15.00**	7,500.00	L.F.				

BID SCHEDULE FORM

COL. 1 SEQ. NO	COL. 2 ITEM NUMBER and DESCRIPTION	COL. 3 ENGINEER'S ESTIMATE OF QUANTITY	COL. 4 UNIT	COL. 5 UNIT PRICE (IN FIGURES) DOLLARS	CTS	COL. 6 EXTENDED AMOUNT (IN FIGURES) DOLLARS	CTS
293	UTL-6.03.1 REMOVAL OF ABANDONED GAS FACILITIES WITH POSSIBLE COAL TAR WRAP. ALL SIZES. (FOR NATIONAL GRID WORK ONLY) (S6.03) **Unit price bid shall not be less than: $ 25.00**	400.00	L.F.				
294	UTL-6.04 ADJUST HARDWARE TO GRADE USING SPACER RINGS/ADAPTORS. (STREET REPAVING.) (S6.04) **Unit price bid shall not be less than: $ 35.00**	25.00	EACH				
295	UTL-6.05 ADJUST HARDWARE TO GRADE BY RESETTING. (ROAD RECONSTRUCTION.) (S6.05) **Unit price bid shall not be less than: $ 65.00**	40.00	EACH				
296	UTL-6.06 SPECIAL CARE EXCAVATION AND BACKFILLING (S6.06) **Unit price bid shall not be less than: $ 180.00**	4,500.00	C.Y.				
297	UTL-6.07 TEST PITS FOR GAS FACILITIES (S6.07) **Unit price bid shall not be less than: $ 100.00**	100.00	C.Y.				

BID SCHEDULE FORM

COL. 1 SEQ. NO	COL. 2 ITEM NUMBER and DESCRIPTION	COL. 3 ENGINEER'S ESTIMATE OF QUANTITIY	COL. 4 UNIT	COL. 5 UNIT PRICE (IN FIGURES) DOLLARS	CTS	COL. 6 EXTENDED AMOUNT (IN FIGURES) DOLLARS	CTS
298	UTL-GCS-2WS GAS INTERFERENCES AND ACCOMMODATIONS PRICE BID SHALL BE FOR THE FIXED SUM OF $ 100,000.00	1.00	F.S.	100,000	00	$100,000	00

SUB-TOTAL: $ _____

299	6.39 A MOBILIZATION BID PRICE OF MOBILIZATION SHALL NOT EXCEED 4% OF THE ABOVE SUB-TOTAL PRICE.	1.00	L.S.				

TOTAL BID PRICE: $ _____

PLEASE BE SURE A LEGIBLE BID IS ENTERED FOR EACH ITEM.
THE BIDDER SHALL INSERT THE TOTAL BID PRICE IN
THE BID FORM ON PAGE C-4 OF THIS BID BOOKLET.

(NO TEXT ON THIS PAGE)

BID FORM
THE CITY OF NEW YORK
DEPARTMENT OF DESIGN AND CONSTRUCTION
DIVISION OF INFRASTRUCTURE

BID FOR FURNISHING ALL LABOR AND MATERIAL NECESSARY AND REQUIRED FOR:

PROJECT ID: BED798

REPLACEMENT OF TRUNK AND DISTRIBUTION WATER MAINS, COMBINED SEWER AND APPURTENANCES IN FLATBUSH AVENUE BETWEEN STERLING PLACE AND 8TH AVENUE, ETC.

INCLUDING SEWER, WATER MAIN, 8TH AVENUE TRIANGLE STREETSCAPE, NECKDOWNS, STREET LIGHTING, AND TRAFFIC SIGNAL WORK

Together With All Work Incidental Thereto
BOROUGH OF BROOKLYN

Name of Bidder: _____

Date of Bid Opening: _____

Bidder is: (Check one, whichever applies) Individual ( ) Partnership ( ) Corporation ( )

Place of Business of Bidder: _____

Bidder's Telephone Number: _____ Fax Number: _____

Bidder's E-Mail Address: _____

Residence of Bidder (If Individual): _____

If Bidder is a Partnership, fill in the following blanks:

Names of Partners	Residence of Partners
_____	_____
_____	_____
_____	_____

If Bidder is a Corporation, fill in the following blanks:

Organized under the laws of the State of _____

Name and Home Address of President: _____

_____

Name and Home Address of Secretary: _____

_____

Name and Home Address of Treasurer: _____

_____

BID FORM

The above-named Bidder affirms and declares:

1. The said bidder is of lawful age and the only one interested in this bid; and no person, firm or corporation other than hereinbefore named has any interest in this bid, or in the Contract proposed to be taken.

2. By submission of this bid, each bidder and each person signing on behalf of any bidder certifies, and in the case of a joint bid each party thereto certifies as to its own organization, under penalty of perjury, that to the best of its knowledge and belief: (1) the prices in this bid have been arrived at independently without collusion, consultation, communication or agreement, for the purpose of restricting competition, as to any matter relating to such prices with any other bidder or with any competitor; (2) unless otherwise required by law, the prices quoted in this bid have not been knowingly disclosed by the bidder and will not knowingly be disclosed by the bidder prior to opening, directly or indirectly, to any other bidder or to any competitor; and (3) No attempt has been made or will be made by the bidder to induce any other person, partnership or corporation to submit or not to submit a bid for the purpose of restricting competition.

3. No councilman or other officer or employee or person whose salary is payable in whole or in part from the City Treasury is directly or indirectly interested in this bid, or in the supplies, materials, equipment, work or labor to which it relates, or in any of the profits thereof.

4. The bidder is not in arrears to the City of New York upon debt or contract or taxes, and is not a defaulter, as surety or otherwise, upon any obligation of the City of New York, and has not been declared not responsible, or disqualified, by any agency of the City of New York or State of New York, nor is there any proceeding pending relating to the responsibility or qualification of the bidder to receive public contracts except as set forth on the Affirmation included as page C-6 of this Bid Booklet.

The bidder hereby affirms that it has paid all applicable City income, excise and other taxes for all years it has conducted business activities in New York City.

5. The bidder, as an individual, or as a member, partner, director or officer of the bidder, if the same be a firm, partnership or corporation, executes this document expressly warranting and representing that should this bid be accepted by the City and the Contract awarded to him, he and his subcontractors engaged in the performance: (1) will comply with the provisions of Section 6-108 of the Administrative Code of the City of New York and the non-discrimination provisions of Section 220a of the New York State Labor Law, as more expressly and in detail set forth in the Agreement; (2) will comply with Section 6-109 of the Administrative Code of the City of New York in relation to minimum wages and other stipulations as more expressly and in detail set forth in the Agreement; (3) have complied with the provisions of the aforesaid laws since their respective effective dates, and (4) will post notices to be furnished by the City, setting forth the requirements of the aforesaid laws in prominent and conspicuous places in each and every plant, factory, building and structure where employees engaged in the performance of the Contract can readily view it, and will continue to keep such notices posted until the supplies, materials and equipment, or work labor and services required to be furnished or rendered by the Contractor have been finally accepted by the City. In the event of any breach or violation of the foregoing, the Contractor may be subject to damages, liquidated or otherwise, cancellation of the Contract and suspension as a bidder for a period of three years. (The words, "the bidder", "he", "his", and "him" where used herein shall mean the individual bidder, firm, partnership or corporation executing the bid).

6. Compliance Report

The bidder, as an individual, or as a member, partner, director, or officer of the bidder, if the same be a firm, partnership, or corporation, (1) represents that his attention has been specifically drawn to Executive Order No. 50, dated, April 25, 1980, on Equal Employment Compliance of the contract, and (2) warrants that he will comply with the provisions of Executive Order No. 50. The Employment Report must be submitted as part of the bid.

The bidder, as an individual, or as a member, partner, director, or officer of the bidder, if the same be a firm, partnership, or corporation, executes this document expressly warranting that he will comply with: (1) the provision of the contract on providing records, Chapter 8.

7. By submission of this bid, the bidder certifies that it now has and will continue to have the financial capability to fully perform the work required for this contract. Any award of this contract will be made in reliance upon such certification. Upon request therefor, the bidder will submit written verification of such financial capability in a form that is acceptable to the department.

8. In accordance with Section 165 of the State Finance Law, the bidder agrees that tropical hardwoods, as defined in Section 165 of the State Finance Law, shall not be utilized in the performance of this Contract, except as the same are permitted by the foregoing provision of law.

9. The bidder has visited and examined the site of the work and has carefully examined the Contract in the form approved by the Corporation Counsel, and will execute the Contract and perform all its items, covenants and conditions, and will provide, furnish and deliver all the work, materials, supplies, tools and appliances for all labor and materials necessary or required for the hereinafter named work, all in strict conformity with the Contract, for the prices set forth in the Bid Schedule:

10. M/WBE UTILIZATION PLAN: By signing its bid, the bidder agrees to the Vendor Certification and Required Affirmations set forth below, unless a full waiver of the Participation Goals is granted. The Vendor Certification and Required Affirmations will be deemed to satisfy the requirement to complete Section V of Part II of Schedule B: M/WBE Utilization Plan.

Section V: Vendor Certification and Required Affirmations:

I hereby:

1) acknowledge my understanding of the M/WBE participation requirements as set forth in this Contract and the pertinent provisions of Section 6-129 of the Administrative Code of the City of New York and the rules promulgated thereunder;
2) affirm that the information supplied in support of the M/WBE Utilization Plan is true and correct;
3) agree, if awarded this Contract, to comply with the M/WBE participation requirements of this Contract, the pertinent provisions of Section 6-129, and the rules promulgated thereunder, all of which shall be deemed to be material terms of this Contract;
4) agree and affirm that it is a material term of this Contract that the Vendor will award the total dollar value of the M/WBE Participation Goals to certified MBEs and/or WBEs, unless a full waiver is obtained or such goals are modified by the Agency; and
5) agree and affirm, if awarded this Contract, to make all reasonable, good faith efforts to meet the M/WBE Participation Goals, or If a partial waiver is obtained or such goals are modified by the Agency, to meet the modified Participation Goals by soliciting and obtaining the participation of certified MBE and/or WBE firms.

(NO TEXT ON THIS PAGE)

BID FORM

PROJECT ID: BED798

TOTAL BID PRICE: In the space provided below, the Bidder shall indicate its Total Bid Price in figures. Such Total Bid Price is set forth on the final page of the Bid Schedule.

TOTAL BID PRICE: $ _____
(a/k/a BID PROPOSAL)

BIDDER'S SIGNATURE AND AFFIDAVIT

Bidder: _____

By: _____
(Signature of Partner or corporate officer)

_____

Attest: Secretary of Corporate Bidder
(Corporate Seal)

Affidavit on the following page should be subscribed
and sworn to before a Notary Public

BID FORM (TO BE NOTARIZED)

AFFIDAVIT WHERE BIDDER IS AN INDIVIDUAL

STATE OF NEW YORK, COUNTY OF _____ ss:

_____ being duly sworn says:

I am the person described in and who executed the foregoing bid, and the several matters therein stated are in all respects true.

_____
(Signature of the person who signed the Bid)

Subscribed and sworn to before me this
_____ day of _____, _____

_____
Notary Public

AFFIDAVIT WHERE BIDDER IS A PARTNERSHIP

STATE OF NEW YORK, COUNTY OF _____ ss:

_____ being duly sworn says:

I am a member of _____ the firm described in and which executed the foregoing bid. I subscribed the name of the firm thereto on behalf of the firm, and the several matters therein stated are in all respects true.

_____
(Signature of Partner who signed the Bid)

Subscribed and sworn to before me this
_____ day of _____, _____

_____
Notary Public

AFFIDAVIT WHERE BIDDER IS A CORPORATION

STATE OF NEW YORK, COUNTY OF _____ ss:

_____ being duly sworn says:

I am the _____ of the above named corporation whose name is subscribed to and which executed the foregoing bid. I reside at _____

I have knowledge of the several matters therein stated, and they are in all respects true.

_____
(Signature of Partner who signed the Bid)

Subscribed and sworn to before me this
_____ day of _____, _____

_____
Notary Public

AFFIRMATION

PROJECT ID: BED798

The undersigned bidder affirms and declares that said bidder is not in arrears to the City of New York upon debt, contract or taxes and is not a defaulter, as surety or otherwise, upon obligation to the City of New York, and has not been declared not responsible, or disqualified, by any agency of the City of New York, nor is there any proceeding pending relating to the responsibility or qualification of the bidder to receive public contracts except:

_____

_____

(If none, the bidder shall insert the word "None" in the space provided above.)

Full Name of Bidder: _____

Address: _____

City _____ State _____ Zip Code _____

CHECK ONE BOX AND INCLUDE APPROPRIATE NUMBER:

/__/ A - Individual or Sole Proprietorship*
SOCIAL SECURITY NUMBER

- - - - - - - - - - - -

/__/ B - Partnership, Joint Venture or other unincorporated organization
EMPLOYER IDENTIFICATION NUMBER

- - - - - - - - - - - -

/__/ C- Corporation
EMPLOYER IDENTIFICATION NUMBER

- - - - - - - - - - - -

By:_____
Signature

Title:_____

If a corporation, place seal here

This affirmation must be signed by an officer or duly authorized representative.

*Under the Federal Privacy Act the furnishing of Social Security Numbers by bidders on City contracts is voluntary. Failure to provide a Social Security Number will not result in a bidder's disqualification. Social Security Numbers will be used to identify bidders, proposers or vendors to ensure their compliance with laws, to assist the City in enforcement of laws, as well as to provide the City a means of identifying of businesses which seek City contracts.

(NO TEXT ON THIS PAGE)

BID BOND 1
FORM OF BID BOND

KNOW ALL MEN BY THESE PRESENTS. That we,_____

_____

_____

hereinafter referred to as the "Principal", and _____

_____

_____

_____

hereinafter referred to as the "Surety" are held and firmly bound to THE CITY OF NEW YORK, hereinafter referred to as the "CITY", or to its successors and assigns in the penal sum of _____

_____

($_____), Dollars lawful money of the United States, for the payment of which said sum of money well and truly to be made, we, and each of us, bind ourselves, our heirs, executors, administrators, successors and assigns, jointly and severally, firmly by these presents.

Whereas, the Principal is about to submit (or has submitted) to the City the accompanying proposal, hereby made a part hereof, to enter into a contract in writing for _____

_____

_____

NOW, THEREFORE, the conditions of this obligation are such that if the Principal shall not withdraw said Proposal without the consent of the City for a period of forty-five (45) days after the opening of bids and in the event of acceptance of the Principal's Proposal by the City, if the Principal shall:

(a) Within ten (10) days after notification by the City, execute in quadruplicate and deliver to the City all the executed counterparts of the Contract in the form set forth in the Contract Documents, in accordance with the proposal as accepted, and

(b) Furnish a performance bond and separate payment bond, as may be required by the City, for the faithful performance and proper fulfillment of such Contract, which bonds shall be satisfactory in all respects to the City and shall be executed by good and sufficient sureties, and

(c) In all respects perform the agreement created by the acceptance of said Proposal as provided in the Information for Bidders, bound herewith and made a part hereof, or if the City shall reject the aforesaid Proposal, then this obligation shall be null and void; otherwise to remain in full force and effect.

BID BOND 2

In the event that the Proposal of the Principal shall be accepted and the Contract be awarded to him the Surety hereunder agrees subject only to the payment by the Principal of the premium therefore, if requested by the City, to write the aforementioned performance and payment bonds in the form set forth in the Contract Documents.

It is expressly understood and agreed that the liability of the Surety for any and all claims hereunder shall in no event exceed the penal amount of this obligation as herein stated.

There shall be no liability under this bond if, in the event of the acceptance of the Principal's Proposal by the City, either a performance bond or payment bond, or both, shall not be required by the City on or before the 30th day after the date on which the City signs the Contract.

The surety, for the value received, hereby stipulates and agrees that the obligations of the Surety and its bond shall in no way be impaired or affected by any postponements of the date upon which the City will receive or open bids, or by any extensions of the time within which the City may accept the Principal's Proposal, or by any waiver by the City of any of the requirements of the Information for Bidders, and the Surety hereby waives notice of any such postponements, extensions, or waivers.

IN WITNESS WHEREOF, the Principal and the Surety have hereunto set their hands and seals and such of them as are corporations have caused their corporate seals to be hereto affixed and these presents to be signed by their proper officers the _____ day of _____, _____.

(Seal) _____(L.S.)
Principal

By: _____

(Seal) _____
Surety

By: _____

BID BOND 3

ACKNOWLEDGMENT OF PRINCIPAL, IF A CORPORATION

State of _____ County of _____ ss:
On this _____ day of _____, _____, before me personally came
_____ to me known, who, being by me duly sworn, did depose and say
that he resides at_____
that he is the _____ of _____
the corporation described in and which executed the foregoing instrument; that he knows the seal of said corporation; that one of the seals affixed to said instrument is such seal; that it was so affixed by order of the directors of said corporation, and that he signed his name thereto by like order.

_____
Notary Public

ACKNOWLEDGMENT OF PRINCIPAL, IF A PARTNERSHIP

State of _____ County of _____ ss:
On this _____ day of _____, _____, before me personally appeared
_____ to me known and known to me to be one of the members of the
firm of _____described in and who executed the foregoing instrument, and he acknowledged to me that he executed the same as and for the act and deed of said firm.

_____
Notary Public

ACKNOWLEDGMENT OF PRINCIPAL, IF AN INDIVIDUAL

State of _____ County of _____ ss:
On this _____ day of _____, _____, before me personally appeared
_____ to me known and known to me to be the person described in and who executed the foregoing instrument and acknowledged that he executed the same.

_____
Notary Public

AFFIX ACKNOWLEDGMENTS AND JUSTIFICATION OF SURETIES

(NO TEXT ON THIS PAGE)

M/WBE PROGRAM

M/WBE UTILIZATION PLAN

M/WBE Program Requirements: The requirements for the M/WBE Program are set forth on the following pages of this Bid Booklet, in the section entitled "Notice to All Prospective Contractors".

Schedule B: M/WBE Utilization Plan: Schedule B: M/WBE Utilization Plan for this Contract is set forth in this Bid Booklet on the pages following the section entitled "Notice to All Prospective Contractors". The M/WBE Utilization Plan (Part I) indicates whether Participation Goals have been established for this Contract. If Participation Goals have been established for this Contract, the bidder must submit an M/WBE Utilization Plan (Part II) with its bid.

Waiver: The bidder may seek a full or partial pre-award waiver of the Participation Goals in accordance with the "Notice to All Prospective Contractors" (See Part A, Section 10). The bidder's request for a waiver must be submitted at least seven (7) calendar days prior to the bid date. Waiver requests submitted after the deadline will not be considered. The form for requesting a waiver of the Participation Goals is set forth in the M/WBE Utilization Plan (Part III).

Rejection of the Bid: The bidder must complete Schedule B: M/WBE Utilization Plan (Part II) set forth in this Bid Booklet on the pages following the section entitled "Notice to All Prospective Contractors". A Schedule B submitted by the bidder which does not include the Vendor Certification and Required Affirmations (See Section V of Part II) will be deemed to be non-responsive, unless a full waiver of the Participation Goals is granted (Schedule B, Part III). In the event that the City determines that the bidder has submitted a Schedule B where the Vendor Certification and Required Affirmations are completed but other aspects of the Schedule B are not complete, or contain a copy or computation error that is at odds with the Vendor Certification and Required Affirmations, the bidder will be notified by the Agency and will be given four (4) calendar days from receipt of notification to cure the specified deficiencies and return a completed Schedule B to the Agency. Failure to do so will result in a determination that the Bid is non-responsive. Receipt of notification is defined as the date notice is emailed or faxed (if the bidder has provided an email address or fax number), or no later than five (5) calendar days from the date of mailing or upon delivery, if delivered.

Impact on LBE Requirements: If Participation Goals have been established for the participation of M/WBEs, the contractor is not required to comply with the Locally Based Enterprise Program ("LBE"). The LBE Program is set forth in Article 67 of the Contract.

NOTICE TO ALL PROSPECTIVE CONTRACTORS

PARTICIPATION BY MINORITY-OWNED AND WOMEN-OWNED BUSINESS ENTERPRISES IN CITY PROCUREMENT

ARTICLE I. M/WBE PROGRAM

Local Law No. 129 of 2005 added and Local Law 1 of 2013 amended Section 6-129 of the Administrative Code of the City of New York (hereinafter "Section 6-129"). Section 6-129 establishes the program for participation in City procurement ("M/WBE Program") by minority- owned business enterprises ("MBEs") and women-owned business enterprises ("WBEs"), certified in accordance with Section 1304 of the New York City Charter. As stated in Section 6-129, the intent of the program is to address the impact of discrimination on the City's procurement process, and to promote the public interest in avoiding fraud and favoritism in the procurement process, increasing competition for City business, and lowering contract costs. The contract provisions contained herein are pursuant to Section 6-129, and the rules of the Department of Small Business Services ("DSBS") promulgated thereunder.

If this Contract is subject to the M/WBE Program established by Section 6-129, the specific requirements of MBE and/or WBE participation for this Contract are set forth in Schedule B of the Contract (entitled the "M/WBE Utilization Plan"), and are detailed below. The Contractor must comply with all applicable MBE and WBE requirements for this Contract.

All provisions of Section 6-129 are hereby incorporated in the Contract by reference and all terms used herein that are not defined herein shall have the meanings given such terms in Section 6-129. Article I, Part A, below, sets forth provisions related to the participation goals for construction, standard and professional services contracts. Article I, Part B, below, sets forth miscellaneous provisions related to the M/WBE Program.

PART A

PARTICIPATION GOALS FOR CONSTRUCTION, STANDARD AND PROFESSIONAL SERVICES CONTRACTS OR TASK ORDERS

1. The **MBE and/or WBE Participation Goals** established for this Contract or Task Orders issued pursuant to this Contract, ("**Participation Goals**"), as applicable, are set forth on Schedule B, Part I to this Contract (see Page 1, line 1 Total Participation Goals) or will be set forth on Schedule B, Part I to Task Orders issued pursuant to this Contract, as applicable.

The **Participation Goals** represent a percentage of the total dollar value of the Contract or Task Order, as applicable, that may be achieved by awarding subcontracts to firms certified with New York City Department of Small Business Services as MBEs and/or WBEs, and/or by crediting the participation of prime contractors and/or qualified joint ventures as provided in Section 3 below, unless the goals have been waived or modified by Agency in accordance with Section 6-129 and Part A, Sections 10 and 11 below, respectively.

2. If **Participation Goals** have been established for this Contract or Task Orders issued pursuant to this Contract, Contractor agrees or shall agree as a material term of the Contract that Contractor shall be subject to the **Participation Goals**, unless the goals are waived or modified by Agency in accordance with Section 6-129 and Part A, Sections 10 and 11 below, respectively.

3. If **Participation Goals** have been established for this Contract or Task Order issued pursuant to this Contract, a Contractor that is an MBE and/or WBE shall be permitted to count its own participation toward fulfillment of the relevant **Participation Goal**, provided that in accordance with Section 6-129 the value of Contractor's participation shall be determined by subtracting from the total value of the Contract or Task Order, as applicable, any amounts that the Contractor pays to direct subcontractors (as defined in Section 6-129(c)(13)), and provided further that a Contractor that is certified as both an MBE and a WBE may count its own participation either toward the goal for MBEs or the goal for WBEs, but not both.

A Contractor that is a qualified joint venture (as defined in Section 6-129(c)(30)) shall be permitted to count a percentage of its own participation toward fulfillment of the relevant **Participation Goal**. In accordance with Section 6-129, the value of Contractor's participation shall be determined by subtracting from the total value of the Contract or Task Order, as applicable, any amounts that Contractor pays to direct subcontractors, and then multiplying the remainder by the percentage to be applied to total profit to determine the amount to which an MBE or WBE is entitled pursuant to the joint venture agreement, provided that where a participant in a joint venture is certified as both an MBE and a WBE, such amount shall be counted either toward the goal for MBEs or the goal for WBEs, but not both.

4. A. If **Participation Goals** have been established for this Contract, a prospective contractor shall be required to submit with its bid or proposal, as applicable, a completed Schedule B, M/WBE Utilization Plan, Part II (see Pages 2-4) indicating: (a) whether the contractor is an MBE or WBE, or qualified joint venture; (b) the percentage of work it intends to award to direct subcontractors; and (c) in cases where the contractor intends to award direct subcontracts, a description of the type and dollar value of work designated for participation by MBEs and/or WBEs, and the time frames in which such work is scheduled to begin and end. In the event that this M/WBE Utilization Plan indicates that the bidder or proposer, as applicable, does not intend to meet the **Participation Goals**, the bid or proposal, as applicable, shall be deemed non-responsive, unless Agency has granted the bidder or proposer, as applicable, a pre- award waiver of the Participation Goals in accordance with Section 6-129 and Part A, Section 10 below.

B. (i) If this Contract is for a master services agreement or other requirements type contract that will result in the issuance of Task Orders that will be individually registered ("Master Services Agreement") and is subject to M/WBE **Participation Goals**, a prospective contractor shall be required to submit with its bid or proposal, as applicable, a completed Schedule B, M/WBE Participation Requirements for Master Services Agreements That Will Require Individually Registered Task Orders, Part II (page 2) indicating the prospective contractor's certification and required affirmations to make all reasonable good faith efforts to meet participation goals established on each individual Task Order issued pursuant to this Contract, or if a partial waiver is obtained or such goals are modified by the Agency, to meet the modified **Participation Goals** by soliciting and obtaining the participation of certified MBE and/or WBE firms. In the event that the Schedule B indicates that the bidder or proposer, as applicable, does not intend to meet the **Participation Goals** that may be established on Task Orders issued pursuant to this Contract, the bid or proposal, as applicable, shall be deemed nonresponsive.

(ii) **Participation Goals** on a Master Services Agreement will be established for individual Task Orders issued after the Master Services Agreement is awarded. If **Participation Goals** have been established on a Task Order, a contractor shall be required to submit a Schedule B – M/WBE Utilization Plan For Independently Registered Task Orders That Are Issued Pursuant to Master Services Agreements, Part II (see Pages 2-4) indicating: (a) whether the contractor is an MBE or WBE, or qualified joint venture; (b) the percentage of work it intends to award to direct subcontractors; and (c) in cases where the contractor intends to award direct subcontracts, a description of the type and dollar value of work designated for participation by MBEs and/or WBEs, and the time frames in which such work is scheduled to begin and end. The contractor must engage in good faith efforts to meet the **Participation Goals** as established for the Task Order unless Agency has granted the contractor a pre-award waiver of the Participation Goals in accordance with Section 6-129 and Part A, Section 10 below.

C. THE BIDDER/PROPOSER MUST COMPLETE THE SCHEDULE B INCLUDED HEREIN (SCHEDULE B, PART II). A SCHEDULE B SUBMITTED BY THE BIDDER/PROPOSER WHICH DOES NOT INCLUDE THE VENDOR CERTIFICATION AND REQUIRED AFFIRMATIONS (SEE SECTION V OF PART II) WILL BE DEEMED TO BE NON-RESPONSIVE, UNLESS A FULL WAIVER OF THE PARTICIPATION GOALS IS GRANTED (SCHEDULE B, PART III). IN THE EVENT THAT THE CITY DETERMINES THAT THE BIDDER/PROPOSER HAS SUBMITTED A SCHEDULE B WHERE THE VENDOR CERTIFICATION AND REQUIRED AFFIRMATIONS ARE COMPLETED BUT OTHER ASPECTS OF THE SCHEDULE B ARE NOT COMPLETE, OR CONTAIN A COPY OR COMPUTATION ERROR THAT IS AT ODDS WITH THE VENDOR CERTIFICATION AND AFFIRMATIONS, THE BIDDER/PROPOSER WILL BE NOTIFIED BY THE AGENCY AND WILL BE GIVEN FOUR (4) CALENDAR DAYS FROM RECEIPT OF NOTIFICATION TO CURE THE SPECIFIED DEFICIENCIES AND RETURN A COMPLETED SCHEDULE B TO THE AGENCY. FAILURE TO DO _

SO WILL RESULT IN A DETERMINATION THAT THE BID/PROPOSAL IS NON-RESPONSIVE. RECEIPT OF NOTIFICATION IS DEFINED AS THE DATE NOTICE IS E-MAILED OR FAXED (IF THE BIDDER/PROPOSER HAS PROVIDED AN E-MAIL ADDRESS OR FAX NUMBER), OR NO LATER THAN FIVE (5) CALENDAR DAYS FROM THE DATE OF MAILING OR UPON DELIVERY, IF DELIVERED.

5. Where an **M/WBE** Utilization Plan has been submitted, the Contractor shall, within 30 days of issuance by Agency of a notice to proceed, submit a list of proposed persons or entities to which it intends to award subcontracts within the subsequent 12 months. In the case of multiyear contracts, such list shall also be submitted every year thereafter. The Agency may also require the Contractor to report periodically about the contracts awarded by its direct subcontractors to indirect subcontractors (as defined in Section 6-129(c)(22)). **PLEASE NOTE: If this Contract is a public works project subject to GML §101(5) (i.e., a contract valued at or below $3M for projects in New York City) or if the Contract is subject to a project labor agreement in accordance with Labor Law §222, and the bidder is required to identify at the time of bid submission its intended subcontractors for the Wicks trades (plumbing and gas fitting; steam heating, hot water heating, ventilating and air conditioning (HVAC); and electric wiring), the Contractor must identify all those to which it intends to award construction subcontracts for any portion of the Wicks trade work at the time of bid submission, regardless of what point in the life of the contract such subcontracts will occur. In identifying intended subcontractors in the bid submission, bidders may satisfy any Participation Goals established for this Contract by proposing one or more subcontractors that are MBEs and/or WBEs for any portion of the Wicks trade work.** In the event that the Contractor's selection of a subcontractor is disapproved, the Contractor shall have a reasonable time to propose alternate subcontractors.

6. MBE and WBE firms must be certified by DSBS in order for the Contractor to credit such firms' participation toward the attainment of the **Participation Goals**. Such certification must occur prior to the firms' commencement of work. A list of MBE and WBE firms may be obtained from the DSBS website at www.nyc.gov/buycertified, by emailing DSBS at buyer@sbs.nyc.gov, by calling (212) 513-6356, or by visiting or writing DSBS at 110 William St., New York, New York, 10038, 7th floor. Eligible firms that have not yet been certified may contact DSBS in order to seek certification by visiting www.nyc.gov/getcertified, emailing MWBE@sbs.nyc.gov, or calling the DSBS certification helpline at (212) 513-6311. A firm that is certified as both an MBE and a WBE may be counted either toward the goal for MBEs or the goal for WBEs, but not both. No credit shall be given for participation by a graduate MBE or graduate WBE, as defined in Section 6-129(c)(20).

7. Where an **M/WBE** Utilization Plan has been submitted, the Contractor shall, with each voucher for payment, and/or periodically as Agency may require, submit statements, certified under penalty of perjury, which shall include, but not be limited to,: the total amount the Contractor paid to its direct subcontractors, and, where applicable pursuant to Section 6-129(j), the total amount direct subcontractors paid to indirect subcontractors; the names, addresses and contact numbers of each MBE or WBE hired as a subcontractor by the Contractor, and, where applicable, hired by any of the Contractor's direct subcontractors; and the dates and amounts paid to each MBE or WBE. The Contractor shall also submit, along with its voucher for final payment: the total amount it paid to subcontractors, and, where applicable pursuant to Section 6-129(j), the total amount its direct subcontractors paid directly to their indirect subcontractors; and a final list, certified under penalty of perjury, which shall include the name, address and contact information of each subcontractor that is an MBE or WBE, the work performed by, and the dates and amounts paid to each.

8. If payments made to, or work performed by, MBEs or WBEs are less than the amount specified in the Contractor's **M/WBE** Utilization Plan, Agency shall take appropriate action, in accordance with Section 6-129 and Article II below, unless the Contractor has obtained a modification of its **M/WBE** Utilization Plan in accordance with Section 6-129 and Part A, Section 11 below.

9. Where an **M/WBE** Utilization Plan has been submitted, and the Contractor requests a change order the value of which exceeds the greater of 10 percent of the Contract or Task Order, as applicable, or $500,000, Agency shall review the scope of work for the Contract or Task Order, as applicable, and the scale and types of work involved in the change order, and determine whether the **Participation Goals** should be modified.

10. Pre-award waiver of the **Participation Goals**. (a) A bidder or proposer, or contractor with respect to a Task Order, may seek a pre-award full or partial waiver of the **Participation Goals** in accordance with Section 6-129, which requests that Agency change one or more **Participation Goals** on the grounds that the **Participation Goals** are unreasonable in light of the availability of certified firms to perform the services required, or by demonstrating that it has legitimate business reasons for proposing a lower level of subcontracting in its M/WBE Utilization Plan.

(b) To apply for a full or partial waiver of the **Participation Goals**, a bidder, proposer, or contractor, as applicable, must complete Part III (Page 5) of Schedule B and submit such request no later than seven (7) calendar days prior to the date and time the bids, proposals, or Task Orders are due, in writing to the Agency by email at zhangji@ddc.nyc.gov or via facsimile at (718) 391-1886. Bidders, proposers, or contractors, as applicable, who have submitted requests will receive an Agency response by no later than two (2) calendar days prior to the due date for bids, proposals, or Task Orders; provided, however, that if that date would fall on a weekend or holiday, an Agency response will be provided by close-of-business on the business day before such weekend or holiday date.

(c) If the Agency determines that the **Participation Goals** are unreasonable in light of the availability of certified firms to perform the services required, it shall revise the solicitation and extend the deadline for bids and proposals, or revise the Task Order, as applicable.

(d) Agency may grant a full or partial waiver of the **Participation Goals** to a bidder, proposer or contractor, as applicable, who demonstrates—before submission of the bid, proposal or Task Order, as applicable—that it has legitimate business reasons for proposing the level of subcontracting in its **M/WBE** Utilization Plan. In making its determination, Agency shall consider factors that shall include, but not be limited to, whether the bidder, proposer or contractor, as applicable, has the capacity and the bona fide intention to perform the Contract without any subcontracting, or to perform the Contract without awarding the amount of subcontracts represented by the **Participation Goals**. In making such determination, Agency may consider whether the **M/WBE** Utilization Plan is consistent with past subcontracting practices of the bidder, proposer or contractor, as applicable, whether the bidder, proposer or contractor, as applicable, has made efforts to form a joint venture with a certified firm, and whether the bidder, proposer, or contractor, as applicable, has made good faith efforts to identify other portions of the Contract that it intends to subcontract.

11. Modification of **M/WBE** Utilization Plan. (a) A Contractor may request a modification of its **M/WBE** Utilization Plan after award of this Contract. **PLEASE NOTE: If this Contract is a public works project subject to GML §101(5) (i.e., a contract valued at or below $3M for projects in New York City) or if the Contract is subject to a project labor agreement in accordance with Labor Law §222, and the bidder is required to identify at the time of bid submission its intended subcontractors for the Wicks trades (plumbing and gas fitting; steam heating, hot water heating, ventilating and air conditioning (HVAC); and electric wiring), the Contractor may request a Modification of its M/WBE Utilization Plan as part of its bid submission.** The Agency may grant a request for Modification of a Contractor's **M/WBE** Utilization Plan if it determines that the Contractor has established, with appropriate documentary and other evidence, that it made reasonable, good faith efforts to meet the **Participation Goals.** In making such determination, Agency shall consider evidence of the following efforts, as applicable, along with any other relevant factors:

(i) The Contractor advertised opportunities to participate in the Contract, where appropriate, in general circulation media, trade and professional association publications and small business media, and publications of minority and women's business organizations;
(ii) The Contractor provided notice of specific opportunities to participate in the Contract, in a timely manner, to minority and women's business organizations;
(iii) The Contractor sent written notices, by certified mail or facsimile, in a timely manner, to advise MBEs or WBEs that their interest in the Contract was solicited;
(iv) The Contractor made efforts to identify portions of the work that could be substituted for portions originally designated for participation by MBEs and/or WBEs in the M/WBE Utilization Plan, and for which the Contractor claims an inability to retain MBEs or WBEs;

(v) The Contractor held meetings with MBEs and/or WBEs prior to the date their bids or proposals were due, for the purpose of explaining in detail the scope and requirements of the work for which their bids or proposals were solicited;

(vi) The Contractor made efforts to negotiate with MBEs and/or WBEs as relevant to perform specific subcontracts, or act as suppliers or service providers;

(vii) Timely written requests for assistance made by the Contractor to Agency's M/WBE liaison officer and to DSBS;

(viii) Description of how recommendations made by DSBS and Agency were acted upon and an explanation of why action upon such recommendations did not lead to the desired level of participation of MBEs and/or WBEs.

Agency's M/WBE officer shall provide written notice to the Contractor of the determination.

(b) The Agency may modify the **Participation Goals** when the scope of the work has been changed by the Agency in a manner that affects the scale and types of work that the Contractor indicated in its **M/WBE** Utilization Plan would be awarded to subcontractors.

12. If this Contract is for an indefinite quantity of construction, standard or professional services or is a requirements type contract and the Contractor has submitted an **M/WBE** Utilization Plan and has committed to subcontract work to MBEs and/or WBEs in order to meet the **Participation Goals**, the Contractor will not be deemed in violation of the M/WBE Program requirements for this Contract with regard to any work which was intended to be subcontracted to an MBE and/or WBE to the extent that the Agency has determined that such work is not needed.

13. If **Participation Goals** have been established for this Contract or a Task Order issued pursuant to this Contract, at least once annually during the term of the Contract or Task Order, as applicable, Agency shall review the Contractor's progress toward attainment of its M/WBE Utilization Plan, including but not limited to, by reviewing the percentage of work the Contractor has actually awarded to MBE and/or WBE subcontractors and the payments the Contractor made to such subcontractors.

14. If **Participation Goals** have been established for this Contract or a Task Order issued pursuant to this Contract, Agency shall evaluate and assess the Contractor's performance in meeting those goals, and such evaluation and assessment shall become part of the Contractor's overall contract performance evaluation.

PART B: MISCELLANEOUS

1. The Contractor shall take notice that, if this solicitation requires the establishment of an **M/WBE** Utilization Plan, the resulting contract may be audited by DSBS to determine compliance with Section 6-129. See §6-129(e)(10). Furthermore, such resulting contract may also be examined by the City's Comptroller to assess compliance with the **M/WBE** Utilization Plan.

2. Pursuant to DSBS rules, construction contracts that include a requirement for an **M/WBE** Utilization Plan shall not be subject to the law governing Locally Based Enterprises set forth in Section 6-108.1 of the Administrative Code of the City of New York.

3. DSBS is available to assist contractors and potential contractors in determining the availability of MBEs and/or WBEs to participate as subcontractors, and in identifying opportunities that are appropriate for participation by MBEs and/or WBEs in contracts.

4. Prospective contractors are encouraged to enter into qualified joint venture agreements with MBEs and/or WBEs as defined by Section 6-129(c)(30).

5. By submitting a bid or proposal the Contractor hereby acknowledges its understanding of the M/WBE Program requirements set forth herein and the pertinent provisions of Section 6-129, and any rules promulgated thereunder, and if awarded this Contract, the Contractor hereby agrees to comply with the M/WBE Program requirements of this Contract and pertinent provisions of Section 6-129, and any rules promulgated thereunder, all of which shall be deemed to be material terms of this Contract. The Contractor hereby agrees to make all reasonable, good faith efforts to solicit and obtain the participation of MBEs and/or WBEs to meet the required **Participation Goals**.

ARTICLE II. ENFORCEMENT

1. If Agency determines that a bidder or proposer, as applicable, has, in relation to this procurement, violated Section 6-129 or the DSBS rules promulgated pursuant to Section 6-129, Agency may disqualify such bidder or proposer, as applicable, from competing for this Contract and the Agency may revoke such bidder's or proposer's prequalification status, if applicable.

2. Whenever Agency believes that the Contractor or a subcontractor is not in compliance with Section 6-129 or the DSBS rules promulgated pursuant to Section 6-129, or any provision of this Contract that implements Section 6-129, including, but not limited to any **M/WBE** Utilization Plan, Agency shall send a written notice to the Contractor describing the alleged noncompliance and offering the Contractor an opportunity to be heard. Agency shall then conduct an investigation to determine whether such Contractor or subcontractor is in compliance.

3. In the event that the Contractor has been found to have violated Section 6-129, the DSBS rules promulgated pursuant to Section 6-129, or any provision of this Contract that implements Section 6-129, including, but not limited to, any **M/WBE** Utilization Plan, Agency may determine that one of the following actions should be taken:

(a) entering into an agreement with the Contractor allowing the Contractor to cure the violation;
(b) revoking the Contractor's pre-qualification to bid or make proposals for future contracts;
(c) making a finding that the Contractor is in default of the Contract;
(d) terminating the Contract;
(e) declaring the Contractor to be in breach of Contract;
(f) withholding payment or reimbursement;
(g) determining not to renew the Contract;
(h) assessing actual and consequential damages;
(i) assessing liquidated damages or reducing fees, provided that liquidated damages may be based on amounts representing costs of delays in carrying out the purposes of the M/WBE Program, or in meeting the purposes of the Contract, the costs of meeting utilization goals through additional procurements, the administrative costs of investigation and enforcement, or other factors set forth in the Contract;
(j) exercising rights under the Contract to procure goods, services or construction from another contractor and charge the cost of such contract to the Contractor that has been found to be in noncompliance; or
(k) taking any other appropriate remedy.

4. If an **M/WBE** Utilization Plan has been submitted, and pursuant to this Article II, Section 3, the Contractor has been found to have failed to fulfill its **Participation Goals** contained in its **M/WBE** Utilization Plan or the **Participation Goals** as modified by Agency pursuant to Article I, Part A, Section 11, Agency may assess liquidated damages in the amount of ten percent (10%) of the difference between the dollar amount of work required to be awarded to MBE and/or WBE firms to meet the **Participation Goals** and the dollar amount the Contractor actually awarded and paid, and/or credited, to MBE and/or WBE firms. In view of the difficulty of accurately ascertaining the loss which the City will suffer by reason of Contractor's failure to meet the **Participation Goals**, the foregoing amount is hereby fixed and agreed as the liquidated damages that the City will suffer by reason of such failure, and not as a penalty. Agency may deduct and retain out of any monies which may become due under this Contract the amount of any such liquidated damages; and in case the amount which may become due under this Contract shall be less than the amount of liquidated damages suffered by the City, the Contractor shall be liable to pay the difference.

5. Whenever Agency has reason to believe that an MBE and/or WBE is not qualified for certification, or is participating in a contract in a manner that does not serve a commercially useful function (as defined in Section 6-129(c)(8)), or has violated any provision of Section 6- 129, Agency shall notify the Commissioner of DSBS who shall determine whether the certification of such business enterprise should be revoked.

6. Statements made in any instrument submitted to Agency pursuant to Section 6-129 shall be submitted under penalty of perjury and any false or misleading statement or omission shall be grounds for the application of any applicable criminal and/or civil penalties for perjury. The making of a false or fraudulent statement by an MBE and/or WBE in any instrument submitted pursuant to Section 6-129 shall, in addition, be grounds for revocation of its certification.

7. The Contractor's record in implementing its **M/WBE** Utilization Plan shall be a factor in the evaluation of its performance. Whenever Agency determines that a Contractor's compliance with an **M/WBE** Utilization Plan has been unsatisfactory, Agency shall, after consultation with the City Chief Procurement Officer, file an advice of caution form for inclusion in VENDEX as caution data.

Tax ID #:_____

APT E-PIN #: 85017B0076

SCHEDULE B – M/WBE Utilization Plan
Part I: M/WBE Participation Goals

Part I to be completed by contracting agency

Contract Overview

APT E- Pin #	85017B0076	**FMS Project ID#:**	BED798
Project Title/ Agency PIN #	REPLACEMENT OF TRUNK DISTRIBUTION WATER MAINS, COMBINED SEWER AND APPURTENANCES/ 8502017WM0008C		
Bid/Proposal Response Date	MARCH 7, 2017		
Contracting Agency	Department of Design and Construction		
Agency Address	30-30 Thomson Avenue **City** Long Island City **State** NY **Zip Code** 11101		
Contact Person	Emmanual K. Charles	**Title**	MWBE Compliance Analyst
Telephone #	718-391-1450	**Email**	charlesem@ddc.nyc.gov

Project Description *(attach additional pages if necessary)*

PROJECT ID: BED798

REPLACEMENT OF TRUNK AND DISTRIBUTION WATER MAINS, COMBINED SEWER AND APPURTENANCES IN FLATBUSH AVENUE BETWEEN STERLING PLACE AND 8TH AVENUE, ETC.

INCLUDING SEWER, WATER MAIN, 8TH AVENUE TRIANGLE STREETSCAPE, NECKDOWNS, STREET LIGHTING, AND TRAFFIC SIGNAL WORK

Together With All Work Incidental Thereto
BOROUGH OF BROOKLYN
CITY OF NEW YORK

M/WBE Participation Goals for Services
Enter the percentage amount for each group or for an unspecified goal. Please note that there are no goals for Asian Americans in Professional Services.

Prime Contract Industry: Construction

Group	Percentage	
Unspecified*	9%	
or		
Black American	UNSPECIFIED*	
Hispanic American	UNSPECIFIED*	
Asian American	UNSPECIFIED*	
Women	UNSPECIFIED*	
Total Participation Goals	9%	Line 1

**Note: For this procurement, individual ethnicity and gender goals are not specified. The Total Participation Goal for construction contracts may be met by using either Black-American, Hispanic-American, Asian American, or Women certified firms or any combination of such firms.*

Tax ID #: _____

APT E-
PIN #: 85017B0076

SCHEDULE B - Part II: M/WBE Participation Plan

Part II to be completed by the bidder/proposer.
Please note: For Non-M/WBE Prime Contractors who will NOT subcontract any services and will self-perform the entire contract, you must obtain a FULL waiver by completing the Waiver Application on pages 17 and 18 and timely submitting it to the contracting agency pursuant to the Notice to Prospective Contractors. Once a FULL WAIVER is granted, it must be included with your bid or proposal and you do not have to complete or submit this form with your bid or proposal.

Section I: Prime Contractor Contact Information

Tax ID # _____ **FMS Vendor ID #** _____

Business Name _____ **Contact Person** _____

Address _____

Telephone # _____ **Email** _____

Section II: M/WBE Utilization Goal Calculation: Check the applicable box and complete subsection.

PRIME CONTRACTOR ADOPTING AGENCY M/WBE PARTICIPATION GOALS

☐ **For Prime Contractors (including Qualified Joint Ventures and M/WBE firms) adopting Agency M/WBE Participation Goals.**	**Total Bid/Proposal Value**		**Agency Total Participation Goals (Line 1, Page 13)**		**Calculated M/WBE Participation Amount**
Calculate the total dollar value of your total bid that you agree will be awarded to M/WBE subcontractors for services and/or credited to an M/WBE prime contractor or Qualified Joint Venture. Please review the Notice to Prospective Contractors for more information on how to obtain credit for M/WBE participation.	$	X		=	$ Line 2

PRIME CONTRACTOR OBTAINED PARTIAL WAIVER APPROVAL: ADOPTING MODIFIED M/WBE PARTICIPATION GOALS

☐ **For Prime Contractors (including Qualified Joint Ventures and M/WBE firms) adopting Modified M/WBE Participation Goals.**	**Total Bid/Proposal Value**		**Adjusted Participation Goal (From Partial Waiver)**		**Calculated M/WBE Participation Amount**
Calculate the total dollar value of your total bid that you agree will be awarded to M/WBE subcontractors for services and/or credited to an M/WBE prime contractor or Qualified Joint Venture. Please review the Notice to Prospective Contractors for more information on how to obtain credit for M/WBE participation.	$	X		=	$ Line 3

Tax ID #: _____

APT E-
PIN #: 85017B0076

Section III: M/WBE Utilization Plan: How Proposer/Bidder Will Fulfill M/WBE Participation Goals. Please review the Notice to Prospective Contractors for more information on how to obtain credit for M/WBE participation. Check applicable box. The Proposer or Bidder will fulfill the M/WBE Participation Goals:

☐ As an M/WBE Prime Contractor that will self-perform and/or subcontract to other M/WBE firms a portion of the contract the value of which is at least the amount located on Lines 2 or 3 above, as applicable. The value of any work subcontracted to non-M/WBE firms will not be credited towards fulfillment of M/WBE Participation Goals. Please check all that apply to Prime Contractor:

☐ MBE ☐ WBE

☐ As a Qualified Joint Venture with an M/WBE partner, in which the value of the M/WBE partner's participation and/or the value of any work subcontracted to other M/WBE firms is at least the amount located on Lines 2 or 3 above, as applicable. The value of any work subcontracted to non M/WBE firms will not be credited towards fulfillment of M/WBE Participation Goals.

☐ As a non M/WBE Prime Contractor that will enter into subcontracts with M/WBE firms the value of which is at least the amount located on Lines 2 or 3 above, as applicable.

Section IV: General Contract Information

What is the expected percentage of the total contract dollar value that you expect to award in subcontracts for services, regardless of M/WBE status? % _____

✓ Scopes of Subcontract Work

Enter brief description of the type(s) and dollar value of subcontracts for all/any services you plan on subcontracting if awarded this contract. For each item, indicate whether the work is designated for participation by MBEs and/or WBEs and the time frame in which such work is scheduled to begin and end. Use additional sheets if necessary.

1. _____
2. _____
3. _____
4. _____
5. _____
6. _____
7. _____
8. _____
9. _____
10. _____
11. _____
12. _____
13. _____
14. _____
15. _____
16. _____
17. _____

Tax ID #: _____

APT E-
PIN #: 85017B0076

Section V: Vendor Certification and Required Affirmations

I hereby:
1) acknowledge my understanding of the M/WBE participation requirements as set forth herein and the pertinent provisions of Section 6-129 of the Administrative Code of the City of New York ("Section 6-129"), and the rules promulgated thereunder;
2) affirm that the information supplied in support of this M/WBE Utilization Plan is true and correct;
3) agree, if awarded this Contract, to comply with the M/WBE participation requirements of this Contract, the pertinent provisions of Section 6-129, and the rules promulgated thereunder, all of which shall be deemed to be material terms of this Contract;
4) agree and affirm that it is a material term of this Contract that the Vendor will award the total dollar value of the M/WBE Participation Goals to certified MBEs and/or WBEs, unless a full waiver is obtained or such goals are modified by the Agency; and
5) agree and affirm, if awarded this Contract, to make all reasonable, good faith efforts to meet the M/WBE Participation Goals, or If a partial waiver is obtained or such goals are modified by the Agency, to meet the modified Participation Goals by soliciting and obtaining the participation of certified MBE and/or WBE firms.

Signature _____ **Date** _____

Print Name _____ **Title** _____

SCHEDULE B – PART III – REQUEST FOR WAIVER OF M/WBE PARTICIPATION REQUIREMENT

Contract Overview

Tax ID # _____ **FMS Vendor ID #** _____

Business Name _____

Contact Name _____ **Telephone #** _____ **Email** _____

Type of Procurement ☐ **Competitive Sealed Bids** ☐ **Other** **Bid/Response Due Date** _____

APT E-PIN # (for this procurement): _____ **Contracting Agency:** _____

M/WBE Participation Goals as described in bid/solicitation documents

_____ % **Agency M/WBE Participation Goal**

Proposed M/WBE Participation Goal *as anticipated by vendor seeking waiver*

_____ % **of the total contract value anticipated in good faith by the bidder/proposer to be subcontracted for services and/or credited to an M/WBE Prime Contractor or Qualified Joint Venture.**

Basis for Waiver Request: *Check appropriate box & explain in detail below (attach additional pages if needed)*

☐ **Vendor does not subcontract services, and has the capacity and good faith intention to perform all such work itself with its own employees.**

☐ **Vendor subcontracts *some* of this type of work but at a *lower* % than bid/solicitation describes, and has the capacity and good faith intention to do so on this contract. (Attach subcontracting plan outlining services that the vendor will self-perform and subcontract to other vendors or consultants.)**

☐ **Vendor has other legitimate business reasons for proposing the M/WBE Participation Goal above. Explain under separate cover.**

References

List 3 most recent contracts performed for NYC agencies (if any). Include information for each subcontract awarded in performance of such contracts. Add more pages if necessary.

CONTRACT NO. _____	**AGENCY** _____	**DATE COMPLETED** _____
Total Contract Amount $ _____	**Total Amount Subcontracted** $ _____	
Item of Work Subcontracted and Value of subcontract _____	Item of Work Subcontracted and Value of subcontract _____	Item of Work Subcontracted and Value of subcontract _____
CONTRACT NO. _____	**AGENCY** _____	**DATE COMPLETED** _____
Total Contract Amount $ _____	**Total Amount Subcontracted** $ _____	
Item of Work Subcontracted and Value of subcontract _____	Item of Work Subcontracted and Value of subcontract _____	Item of Work Subcontracted and Value of subcontract _____
CONTRACT NO.	**AGENCY**	**DATE COMPLETED**
Total Contract Amount $	**Total Amount Subcontracted** $	
Item of Work Subcontracted and Value of subcontract _____	Item of Work Subcontracted and Value of subcontract _____	Item of Work Subcontracted and Value of subcontract _____

List 3 most recent contracts performed for other entities. Include information for each subcontract awarded in performance of such contracts. Add more pages if necessary.
(Complete ONLY if vendor has performed fewer than 3 New York City contracts.)

TYPE OF Contract _____ **ENTITY** _____ **DATE COMPLETED** _____

Manager at entity that hired vendor (Name/Phone No./Email) _____

Total Contract Amount $ _____ **Total Amount Subcontracted** $ _____

Type of Work Subcontracted _____ _____ _____

TYPE OF Contract _____ **AGENCY/ENTITY** _____ **DATE COMPLETED** _____

Manager at agency/entity that hired vendor (Name/Phone No./Email) _____

Total Contract Amount $ _____ **Total Amount Subcontracted** $ _____

Item of Work Subcontracted and Value of subcontract _____ Item of Work Subcontracted and Value of subcontract _____ Item of Work Subcontracted and Value of subcontract _____

TYPE OF Contract _____ **AGENCY/ENTITY** _____ **DATE COMPLETED** _____

Manager at entity that hired vendor (Name/Phone No./Email) _____

Total Contract Amount $ _____ **Total Amount Subcontracted** $ _____

Item of Work Subcontracted and Value of subcontract _____ Item of Work Subcontracted and Value of subcontract _____ Item of Work Subcontracted and Value of subcontract _____

VENDOR CERTIFICATION: *I hereby affirm that the information supplied in support of this waiver request is true and correct, and that this request is made in good faith.*

Signature: _____ **Date:** _____

Print Name: _____ **Title:** _____

Shaded area below is for agency completion only

AGENCY CHIEF CONTRACTING OFFICER APPROVAL

Signature _____ Date: _____

CITY CHIEF PROCUREMENT OFFICER APPROVAL

Signature: _____ Date: _____

Waiver Determination

Full Waiver Approved ☐
Waiver Denied ☐
Partial Waiver Approved ☐
Revised Participation Goal _____%

APPRENTICESHIP PROGRAM REQUIREMENTS

Bidders are advised that the Apprenticeship Program Requirements set forth below apply to each contract for which a check mark is indicated before the word "Yes". Compliance with these requirements will be determined solely by the City.

____√____ YES _____ NO

(1) Apprenticeship Program Requirements

Notice to Bidders: Please be advised that, pursuant to the authority granted to the City under Labor Law Section 816-b, the Department of Design and Construction hereby requires that the contractor awarded a contract as a result of this Invitation for Bids, and any of its subcontractors with subcontracts worth two million dollars or over, have, prior to entering into such contract or subcontract, apprenticeship agreements appropriate for the type and scope of work to be performed that have been registered with, and approved by, the New York State Commissioner of Labor. In addition, the contractor and its subcontractors will be required to show that such apprenticeship program/s have successfully passed the two year Probation period following the initial registration date of such program/s with the New York State Department of Labor.

The failure to prove, upon request, that these requirements have been met shall result in the contract not being awarded to the contractor or the subcontract not being approved.

Please be further advised that, pursuant to Labor Law Section 220, the allowable ratio of apprentices to journeypersons in any craft classification shall not be greater than the ratio permitted to the contractor as to its workforce on any job under the registered apprenticeship program.

(2) Apprenticeship Program Questionnaire

The bidder must submit a completed and signed Apprenticeship Program Questionnaire. The Questionnaire is set forth on the following page of the Bid Booklet.

APPRENTICESHIP PROGRAM QUESTIONNAIRE ("APQ")

Bidder Name: _____

Project ID Number: _____

The Bidder MUST complete, sign, and submit this Apprenticeship Program Questionnaire with its bid.

1. Does the bidder have any Apprenticeship Program agreement(s) appropriate for the type and scope of work to be performed? (Note: Participation may be by either direct sponsorship or through collective bargaining agreement(s).)

   _____YES _____NO

2. Has/have the bidder's Apprenticeship Program agreement(s) been registered with, and approved by the New York State Commissioner of Labor ("NYSDOL Commissioner")?

   _____YES _____NO

3. Has/have the bidder's Apprenticeship Program successfully passed the two-year Probation period following its initial registration with the New York State Department of Labor ("NYSDOL")?

   _____YES _____NO

If the answers to Questions 1, 2, and 3 are "Yes". The bidder shall, in the space below (and/or attached herewith where applicable), provide the contact information for such Apprenticeship Program(s) as well as information demonstrating that such Apprenticeship Program(s) have passed the two-year Probation period following its initial registration with the NYSDOL. (The bidder may attach additional pages if necessary).

- **Where the bidder directly sponsors any such apprenticeship Program(s),** the bidder shall provide the following:
  - The trade classification(s) covered by such program(s), and the date(s) such program(s) was/were approved by the NYSDOL Commissioner; and/or
  - A copy of a letter(s) from the NYSDOL, on NYSDOL's letterhead, executed by an official thereof, which verifies/verify the trade classification(s) covered by such program(s), and the date(s) such program(s) was/were approved by the NYSDOL Commissioner and the Active status of such program(s).

- **Where the bidder participates in any such Apprenticeship Program(s) through its membership in an employer organization(s) that directly sponsors such program(s) or where the employer association(s) participates in such program(s) through collective bargaining,** the bidder shall provide the following:
  - The contact information for the employer organization(s), and the apprenticeable trade(s) covered pursuant to the bidder's affiliation therewith, and the date such program(s) was/were approved by the NYSDOL Commissioner; or
  - A letter(s) from such employer organization(s), on letterhead of such organization(s), executed by an officer, delegate or official thereof, which verifies/verify the trade classification(s) covered by such program(s) was/were approved by the NYSDOL Commissioner, and that the bidder is both a member in good standing of the identified employer organization <u>and is subject to the provisions of the Apprenticeship Program agreement(s) sponsored thereby</u>.

APPRENTICESHIP PROGRAM QUESTIONNAIRE ("APQ")

Project ID Number: _____

- **Where the bidder participates in any such Apprenticeship Programs through collective bargaining agreements,** the bidder shall provide the following:
  - The contact information for such collective bargaining entity(ies) and the apprenticeable trade(s) covered pursuant to the bidder's affiliation therewith;
  - A letter(s) from such collective bargaining entity(ies), on letterhead of such entity(ies), executed by an officer, delegate or official thereof, which verifies/verify the bidder's status as a signatory/participant in good standing to such collective bargaining entity(ies) Apprenticeship Program Agreements.

_____

_____

_____

_____

_____

_____

_____

_____

_____

_____

_____

_____

_____

_____

_____

Bidder: _____

By: _____ Title: _____
(Signature of Partner or Corporate Officer)

Date: _____

Project ID. _____

SAFETY QUESTIONNAIRE

The bidder must include, with its bid, all information requested on this Safety Questionnaire. Failure to provide a completed and signed Safety Questionnaire at the time of bid opening may result in disqualification of the bid as non-responsive.

1. Bidder Information:

Company Name: _____

DDC Project Number: _____

Company Size: _____ Ten (10) employees or less

_____ Greater than ten (10) employees

Company has previously worked for DDC _____ YES _____ NO

2. Type(s) of Construction Work

TYPE OF WORK	LAST 3 YEARS	THIS PROJECT
General Building Construction	_____	_____
Residential Building Construction	_____	_____
Nonresidential Building Construction	_____	_____
Heavy Construction, except building	_____	_____
Highway and Street Construction	_____	_____
Heavy Construction, except highways	_____	_____
Plumbing, Heating, HVAC	_____	_____
Painting and Paper Hanging	_____	_____
Electrical Work	_____	_____
Masonry, Stonework and Plastering	_____	_____
Carpentry and Floor Work	_____	_____
Roofing, Siding, and Sheet Metal	_____	_____
Concrete Work	_____	_____
Specialty Trade Contracting	_____	_____
Asbestos Abatement	_____	_____
Other (specify)		
_____	_____	_____

3. Experience Modification Rate:

The Experience Modification Rate (EMR) is a rating generated by the National Council of Compensation Insurance (NCCI). This rating is used to determine the contractor's premium for worker's compensation insurance. The contractor may obtain its EMR by contacting its insurance broker or the NCCI. If the contractor cannot obtain its EMR, it must submit a written explanation as to why.

Project ID. _____

The Contractor must indicate its Intrastate and Interstate EMR for the past three years. [Note: For contractors with less than three years of experience, the EMR will be considered to be 1.00].

YEAR	INTRASTATE RATE	INTERSTATE RATE
_____	_____	_____
_____	_____	_____
_____	_____	_____

If the Intrastate and/or Interstate EMR for any of the past three years is greater than 1.00, the contractor must attach, to this questionnaire, a written explanation for the rating and identify what corrective action was taken to correct the situation resulting in that rating.

4. OSHA Information:

____ YES ____ NO Contractor has received a willful violation issued by OSHA or New York City Department of Buildings (NYCDOB) within the last three years.

____ YES ____ NO Contractor has had an incident requiring OSHA notification within 8 hours (all work-related fatalities) or an incident requiring OSHA notification within 24 hours (all work-related in-patient hospitalizations, all amputations and all losses of an eye).

The Occupational Safety and Health Act (OSHA) of 1970 requires employers with ten or more employees, on a yearly basis to complete and maintain on file the form entitled "Log of Work-related Injuries and Illnesses". This form is commonly referred to as the OSHA 300 Log (OSHA 200 Log for 2001 and earlier).

The OSHA 300 Log must be submitted for the last three years for contractors with more than ten employees.

The Contractor must indicate the total number of hours worked by its employees, as reflected in payroll records for the past three years.

The contractor must submit the Incident Rate for Lost Time Injuries (the Incident Rate) for the past three years. The Incident Rate is calculated in accordance with the formula set forth below. For each given year, the total number of incidents is the total number of non-fatal injuries and illnesses reported on the OSHA 300 Log. The 200,000 hours represents the equivalent of 100 employees working forty hours a week, fifty weeks per year.

$$\text{Incident Rate} = \frac{\text{Total Number of Incidents X 200,000}}{\text{Total Number of Hours Worked by Employees}}$$

YEAR	TOTAL NUMBERS OF HOURS WORKED BY EMPLOYEES	INCIDENT RATE
_____	_____	_____
_____	_____	_____
_____	_____	_____

Project ID. _____

If the contractor's Incident Rate for any of the past three years is one point higher than the Incident Rate for the type of construction it performs (listed below), the contractor must attach, to this questionnaire, a written explanation for the relatively high rate.

General Building Construction	8.5
Residential Building Construction	7.0
Nonresidential Building Construction	10.2
Heavy Construction, except building	8.7
Highway and Street Construction	9.7
Heavy Construction, except highways	8.3
Plumbing, Heating, HVAC	11.3
Painting and Paper Hanging	6.9
Electrical Work	9.5
Masonry, Stonework and Plastering	10.5
Carpentry and Floor Work	12.2
Roofing, Siding, and Sheet Metal	10.3
Concrete Work	8.6
Specialty Trade Contracting	8.6

5. Safety Performance on Previous DDC Project(s)

____ YES ____ NO Contractor previously audited by the DDC Office of Site Safety.

DDC Project Number(s): _____, _____, _____

____ YES ____ NO Accident on previous DDC Project(s).

DDC Project Number(s): _____, _____, _____

____ YES ____ NO Fatality or Life-altering Injury on DDC Project(s) within the last three years. [Examples of a life-altering injury include loss of limb, loss of a sense (e.g., sight, hearing), or loss of neurological function].

DDC Project Number(s): _____, _____, _____

Date: _____ By: _____

(Signature of Owner, Partner, Corporate Officer)

Title: _____

Pre-Award Process

The bidder is advised that as part of the pre-award review of its bid, it may be required to submit the information described in Sections (A) through (D) below. If required, such information must be submitted by the bidder within five (5) business days following receipt of notification from DDC that it is among the low bidders. Such notification from DDC will be by facsimile or in writing and will specify the types of information must be submitted. The types of information the bidder may be required to submit are described below. In the event the bidder fails to submit the required information within the specified time frame, its bid may be rejected as nonresponsive.

****

(A) **Project Reference Form**: If required, the bidder must complete and submit the Project Reference Form set forth on pages 27 through 29 of this Bid Booklet. The Project Reference Form consists of 3 parts: (1) Contracts Completed by the Bidder, (2) Contracts Currently Under Construction by the Bidder, and (3) Pending Contracts Not Yet Started by the Bidder.

(B) **Copy of License**: If required, the bidder must submit a copy of the license under which the bidder will be performing the work. Such license must clearly show the following: (1) Name of the Licensee, (2) License Number, and (3) Expiration date of the License. A copy of the license will be required from bidders for the following contracts: Plumbing Work, Electrical Work and Asbestos Abatement.

(C) **Financial Information**: If required, the bidder must submit the financial information described below:

(1) Audited Financial Statements: Financial statements (Balance Sheet and Income Statement) of the entity submitting the bid, as audited by an independent auditor licensed to practice as a certified public accountant (CPA). Audited financial statements for the three most recent fiscal years must be submitted. Each such financial statement must include the auditor's standard report.

If the bidder does not have audited financial statements, it must submit an affidavit attesting to the fact that the bidder does not have such statements. In addition, the bidder must submit the following documentation covering the three most recent fiscal years: signed federal tax returns, unaudited financial statements, and a "certified review letter" from a certified public accountant (CPA) verifying the unaudited financial statements.

Unless the most recent audited or unaudited financial statement was issued within ninety (90) days, the bidder must submit interim financial information that includes data on financial position and results of operation (income data) for the current fiscal year. Such information may be summarized on a monthly or quarterly basis or at other intervals.

(2) Schedule of Aged Accounts Receivable, including portion due within ninety (90) days.

(D) **Project Specific Information**: If required, the bidder must submit the project specific information described below:

(1) Statement indicating the number of years of experience the bidder has had and in what type of construction.
(2) Resumes of all key personnel to be involved in the project, including the proposed project superintendent.
(3) List of significant pieces of equipment expected to be used for the contract, and whether such equipment is owned or leased.
(4) Description of work expected to be subcontracted, and to what firms, if known.
(5) List of key material suppliers.
(6) Preliminary bar chart time schedule
(7) Contractor's expected means of financing the project. This should be based on the assumption that the contractor is required to finance 2X average monthly billings throughout the contract period.
(8) Any other issues the contractor sees as impacting his ability to complete the project according to the contract.

In addition to the information described in Sections (A) through (D) above, the bidder shall submit such additional information as the Commissioner may require, including without limitation, an explanation or justification for specific unit price items.

The bidder is further advised that it may be required to attend a pre-award meeting with DDC representatives. If such a meeting is convened, the bidder will be advised as to any additional material to be provided.

A. PROJECT REFERENCES – CONTRACTS COMPLETED BY THE BIDDER

List all contracts substantially completed within the last 4 years, up to a maximum of 10, in descending order of date of substantial completion.

Project & Location	Contract Type	Contract Amount ($000)	Date Completed	Owner Reference & Tel. No.	Architect/Engineer Reference & Tel. No. if different from owner

B. PROJECT REFERENCES – CONTRACTS CURRENTLY UNDER CONSTRUCTION BY THE BIDDER

List all contracts currently under construction even if they are not similar to the contract being awarded.

Project & Location	Contract Type	Contract Amount ($000)	Subcontracted to Others ($000)	Uncompleted Portion ($000)	Date Scheduled to Complete	Owner Reference & Tel. No.	Architect/Engineer Reference & Tel. No. if different from owner

C. PROJECT REFERENCES – PENDING CONTRACTS NOT YET STARTED BY THE BIDDER

List all contracts awarded to or won by the bidder but not yet started.

Project & Location	Contract Type	Contract Amount ($000)	Date Scheduled to Start	Owner Reference & Tel. No.	Architect/Engineer Reference & Tel. No. if different from owner

(NO TEXT ON THIS PAGE)

OFFICE OF THE MAYOR
BUREAU OF LABOR SERVICES
CONTRACT CERTIFICATE

To be completed if the contract is less than $1,000,000

Contractor: _____

Address: _____

_____

Telephone Number: _____

Name and Title of Signatory: _____

_____

Contracting Agency or Owner: _____

Project Number: _____

Proposed Contract Amount: _____

Description and Address of Proposed Contract: _____

Names of Subcontractors in the amount of 750,000 or more on this contract (if not known at this time, so state indicating that trades will be subcontracted):

_____

_____

_____

I, (fill in name of person signing) _____, hereby affirm that I am authorized by the above-named contractor to certify that said contractor's proposed contract with the above-named owner or city agency is less than $1,000,000. This affirmation is made in accordance with Executive Order No. 50 (1980) as amended and its implementing regulations.

_____ _____
Date Signature

WILLFUL OR FRAUDULENT FALSIFICATION OF ANY DATA OR INFORMATION SUBMITTED HEREWITH MAY RESULT IN THE TERMINATION OF ANY CONTRACT BETWEEN THE CITY AND THE BIDDER OR CONTRACTOR AND BAR THE BIDDER OR CONTRACTOR FROM PARTICIPATION IN ANY CITY CONTRACT FOR A PERIOD OF UP TO THREE YEARS. FURTHER, SUCH FALSIFICATION MAY RESULT IN CRIMINAL PROSECUTION.

(NO TEXT ON THIS PAGE)

VENDEX COMPLIANCE

(A) **Vendex Fees:** Pursuant to Procurement Policy Board Rule 2-08(f)(2), the contractor will be charged a fee for the administration of the VENDEX system, including the Vendor Name Check process, if a Vendor Name Check review is required to be conducted by the Department of Investigation. The contractor shall also be required to pay the applicable required fees for any of its subcontractors for which Vendor Name Check reviews are required. The fee(s) will be deducted from payments made to the contractor under the contract. For contracts with an estimated value of less than or equal to $1,000,000, the fee will be $175 per Vendor Name Check review. For contracts with an estimated value of greater than $1,000,000, the fee will be $350 per Vendor Name Check review.

(B) **Confirmation of Vendex Compliance:** The Bidder shall submit this Confirmation of Vendex Compliance to the Department of Design and Construction, Contracts Section, 30-30 Thomson Avenue – First Floor, Long Island City, NY 11101.

Bid Information: The Bidder shall complete the bid information set forth below.

Name of Bidder: _____
Bidder's Address: _____
Bidder's Telephone Number: _____
Bidder's Fax Number: _____
Date of Bid Opening: _____
PROJECT ID: _____

Vendex Compliance: To demonstrate compliance with Vendex requirements, the Bidder shall complete either Section (1) or Section (2) below, whichever applies.

(1) **Submission of Vendex Questionnaires to MOCS:** By signing in the space provided below, the Bidder certifies that as of the date specified below, the Bidder has submitted Vendex Questionnaires to the Mayor's Office of Contract Services, Attn: VENDEX, 253 Broadway, 9th Floor, New York, New York 10007.

Date of Submission: _____

By: _____
(Signature of Partner or corporate officer)

Print Name: _____

(2) **Submission of Certification of No Change to DDC:** By signing in the space provided below, the Bidder certifies that it has read the instructions in a "Vendor's Guide to Vendex" and that such instructions do not require the Bidder to submit Vendex Questionnaires. The Bidder has completed **TWO ORIGINALS** of the Certification of No Change set forth on the next page of this Bid Booklet.

By: _____
(Signature of Partner or corporate officer)

Print Name: _____

(NO TEXT ON THIS PAGE)

Certificate of No Change Form

Mayor's Office of Contract Services

- Please submit two completed forms. Copies will not be accepted.
- Please send both copies to the agency that requested it, unless you are advised to send it directly to the Mayor's Office of Contract Services (MOCS).
- A materially false statement willfully or fraudulently made in connection with this certification, and/or the failure to conduct appropriate due diligence in verifying the information that is the subject of this certification, may result in rendering the submitting entity non-responsible for the purpose of contract award.
- A materially false statement willfully or fraudulently made in connection with this certification may subject the person making the false statement to criminal charges

I, _____, being duly sworn, state that I have read
Enter Your Name

and understand all the items contained in the vendor questionnaire and any submission of change as identified on page one of this form and certify that as of this date, these items have not changed. I further certify that, to the best of my knowledge, information and belief, those answers are full, complete, and accurate; and that, to the best of my knowledge, information, and belief, those answers continue to be full, complete, and accurate.

In addition, I further certify on behalf of the submitting vendor that the information contained in the principal questionnaire(s) and any submission of change identified on page two of this form have not changed and have been verified and continue, to the best of my knowledge, to be full, complete and accurate.

I understand that the City of New York will rely on the information supplied in this certification as additional inducement to enter into a contract with the submitting entity.

Vendor Questionnaire *This section is required.*

This refers to the vendor questionnaire(s) submitted for the vendor doing business with the City.

Name of Submitting Entity: _____

Vendor's Address: _____

Vendor's EIN or TIN: _____ Requesting Agency: _____

Are you submitting this Certification as a parent? (Please circle one) Yes No

Signature date on the last full vendor questionnaire signed for the submitting vendor: _____

Signature date on change submission for the submitting vendor: _____

Mayor's Office of Contract Services
253 Broadway, 9th Floor New York, NY 10007
Phone: 212 788 0018 Fax: 212 788 0049

Principal Questionnaire

This section refers to the most recent principal questionnaire submissions.

Mayor's Office of Contract Services

	Principal Name	Date of signature on last full Principal Questionnaire	Date(s) of signature on submission of change
1			
2			
3			
4			
5			
6			

☐ Check if additional changes were submitted and attach a document with the date of additional submissions.

Certification *This section is required.*

This form must be signed and notarized. Please complete this twice. Copies will not be accepted.

Certified By:

_____
Name (Print)

_____
Title

_____
Name of Submitting Entity

_____ _____
Signature *Date*

Notarized By:

_____ _____ _____
Notary Public *County License Issued* *License Number*

Sworn to before me on: _____
Date

Mayor's Office of Contract Services
253 Broadway, 9th Floor New York, NY 10007
Phone: 212 788 0018 Fax: 212 788 0049

Certificate of No Change Form

Mayor's Office of Contract Services

- Please submit two completed forms. Copies will not be accepted.
- Please send both copies to the agency that requested it, unless you are advised to send it directly to the Mayor's Office of Contract Services (MOCS).
- A materially false statement willfully or fraudulently made in connection with this certification, and/or the failure to conduct appropriate due diligence in verifying the information that is the subject of this certification, may result in rendering the submitting entity non-responsible for the purpose of contract award.
- A materially false statement willfully or fraudulently made in connection with this certification may subject the person making the false statement to criminal charges

I, _____, being duly sworn, state that I have read
Enter Your Name

and understand all the items contained in the vendor questionnaire and any submission of change as identified on page one of this form and certify that as of this date, these items have not changed. I further certify that, to the best of my knowledge, information and belief, those answers are full, complete, and accurate; and that, to the best of my knowledge, information, and belief, those answers continue to be full, complete, and accurate.

In addition, I further certify on behalf of the submitting vendor that the information contained in the principal questionnaire(s) and any submission of change identified on page two of this form have not changed and have been verified and continue, to the best of my knowledge, to be full, complete and accurate.

I understand that the City of New York will rely on the information supplied in this certification as additional inducement to enter into a contract with the submitting entity.

Vendor Questionnaire *This section is required.*

This refers to the vendor questionnaire(s) submitted for the vendor doing business with the City.

Name of Submitting Entity: _____

Vendor's Address: _____

Vendor's EIN or TIN: _____ Requesting Agency: _____

Are you submitting this Certification as a parent? (Please circle one) Yes No

Signature date on the last full vendor questionnaire signed for the submitting vendor: _____

Signature date on change submission for the submitting vendor: _____

Principal Questionnaire

This section refers to the most recent principal questionnaire submissions.

Mayor's Office of Contract Services

	Principal Name	Date of signature on last full Principal Questionnaire	Date(s) of signature on submission of change
1			
2			
3			
4			
5			
6			

☐ Check if additional changes were submitted and attach a document with the date of additional submissions.

Certification *This section is required.*

This form must be signed and notarized. Please complete this twice. Copies will not be accepted.

Certified By:

_____
Name (Print)

_____
Title

_____
Name of Submitting Entity

_____ _____
Signature *Date*

Notarized By:

_____ _____ _____
Notary Public *County License Issued* *License Number*

Sworn to before me on: _____
Date

IRAN DIVESTMENT ACT COMPLIANCE RIDER

FOR NEW YORK CITY CONTRACTORS

The Iran Divestment Act of 2012, effective as of April 12, 2012, is codified at State Finance Law ("SFL") §165-a and General Municipal Law ("GML") §103-g. The Iran Divestment Act, with certain exceptions, prohibits municipalities, including the City, from entering into contracts with persons engaged in investment activities in the energy sector of Iran. Pursuant to the terms set forth in SFL §165-a and GML §103-g, a person engages in investment activities in the energy sector of Iran if:

(a) The person provides goods or services of twenty million dollars or more in the energy sector of Iran, including a person that provides oil or liquefied natural gas tankers, or products used to construct or maintain pipelines used to transport oil or liquefied natural gas, for the energy sector of Iran; or

(b) The person is a financial institution that extends twenty million dollars or more in credit to another person, for forty-five days or more, if that person will use the credit to provide goods or services in the energy sector in Iran and is identified on a list created pursuant to paragraph (b) of subdivision three of Section 165-a of the State Finance Law and maintained by the Commissioner of the Office of General Services.

A bid or proposal shall not be considered for award nor shall any award be made where the bidder or proposer fails to submit a signed and verified bidder's certification.

Each bidder or proposer must certify that it is not on the list of entities engaged in investment activities in Iran created pursuant to paragraph (b) of subdivision 3 of Section 165-a of the State Finance Law. In any case where the bidder or proposer cannot certify that they are not on such list, the bidder or proposer shall so state and shall furnish with the bid or proposal a signed statement which sets forth in detail the reasons why such statement cannot be made. The City of New York may award a bid to a bidder who cannot make the certification on a case by case basis if:

(1) The investment activities in Iran were made before the effective date of this section (i.e., April 12, 2012), the investment activities in Iran have not been expanded or renewed after the effective date of this section and the person has adopted, publicized and is implementing a formal plan to cease the investment activities in Iran and to refrain from engaging in any new investments in Iran: or

(2) The City makes a determination that the goods or services are necessary for the City to perform its functions and that, absent such an exemption, the City would be unable to obtain the goods or services for which the contract is offered. Such determination shall be made in writing and shall be a public document.

BIDDER'S CERTIFICATION OF COMPLIANCE WITH IRAN DIVESTMENT ACT

Pursuant to General Municipal Law §103-g, which generally prohibits the City from entering into contracts with persons engaged in investment activities in the energy sector of Iran, the bidder/proposer submits the following certification:

[*Please Check One*]

BIDDER'S CERTIFICATION

☐ By submission of this bid or proposal, each bidder/proposer and each person signing on behalf of any bidder/proposer certifies, and in the case of a joint bid each party thereto certifies as to its own organization, under penalty of perjury, that to the best of its knowledge and belief, that each bidder/proposer is not on the list created pursuant to paragraph (b) of subdivision 3 of Section 165-a of the State Finance Law.

☐ I am unable to certify that my name and the name of the bidder/proposer does not appear on the list created pursuant to paragraph (b) of subdivision 3 of Section 165-a of the State Finance Law. I have attached a signed statement setting forth in detail why I cannot so certify.

_____
SIGNATURE

_____
PRINTED NAME

_____
TITLE

Sworn to before me this
_____ day of_____, 20____

_____
Notary Public

Dated:

THE CITY OF NEW YORK
DEPARTMENT OF SMALL BUSINESS SERVICES
DIVISION OF LABOR SERVICES
CONTRACT COMPLIANCE UNIT
110 WILLIAMS STREET
NEW YORK, NEW YORK 10038
PHONE: (212) 513-6323
FAX: (212) 618-8879

CONSTRUCTION

EMPLOYMENT

REPORT

(NO TEXT ON THIS PAGE)

The City of New York
Department of Small Business Services
Division of Labor Services
Contract Compliance Unit
110 William Street
New York, New York 10038
Phone: (212) 513 – 6323
Fax: (212) 618-8879

CONSTRUCTION EMPLOYMENT REPORT INSTRUCTIONS

WHO MUST FILE A CONSTRUCTION EMPLOYMENT REPORT

A Construction Employment Report (ER) must be filed if you meet the following conditions:

CONTRACT FUNDING SOURCE	CONTRACTOR	CONTRACT VALUE	SUBMISSION REQUIREMENT
Federal/Federally assisted	Prime and subcontractors	$10,000 or greater	Construction Employment Report
City and state funded	Prime contractor	$1,000,000 or greater	
	Subcontractor	$750,000 or greater	
		Less than $750,000	Less than $750,000 Certificate (City/State Only)

Prime Contractor:

- A general contractor or construction manager selected to perform work on a construction project funded (in whole or in part) by the federal government with a proposed contract value of $10,000 or more.
- A general contractor or construction manager selected to perform work on a construction project funded or assisted by the City of New York with a proposed contract value of $1,000,000 or more.

Subcontractor:

- A subcontractor selected to perform work on a construction project funded (in whole or in part) by the federal government with a proposed contract value of $10,000 or more.
- A subcontractor selected to perform work on a construction project funded or assisted by the City of New York with a proposed contract value of $750,000 or more.
- A subcontractor selected to perform work on a construction project funded or assisted by the City of New York with a proposed contract value of less than $750,000 must submit a "Less than $750,000" certificate.

WHERE TO FILE

Employment Reports must be filed with the City agency awarding the contract. If you are a contractor or subcontractor who will be working for a private developer in receipt of funding or assistance from the City, the ER must be filed with the City agency with jurisdiction over the developer's project.

DLS REVIEW PROCESS

In accordance with Executive Order 50 (EO 50), upon receipt by DLS of a completed ER, DLS conducts a review of the contractor's current employment policies, practices and procedures, as well as perform a statistical analysis of the contractor's workforce, if necessary. The process is as follows:

1. Within five (5) business days, DLS will review the ER for completeness and accuracy. If any information is omitted or incorrect, or if necessary documents are not submitted, the submission shall be deemed incomplete and DLS will inform the contractor. The substantive compliance review does not commence until the submission is complete. **An incomplete submission will delay the review process and may preclude or interrupt the contract approval.**

2. If the ER submission is complete, the compliance review will proceed, resulting in one of the following:

   Certificate of Approval
   The contractor is found to be in compliance with all applicable laws and regulations. The approval is valid for 36 months.

   Continued Approval Certificate
   The contractor has been issued a Certificate of Approval in the previous 36 months which is good for the applicable contract.

   Conditional Certificate of Compliance
   The contractor is required to take corrective actions in order to be in compliance with EO 50. The contractor must meet the conditions within one month of the issue of the Conditional Certificate.

   Determination of Nonperformance
   The contractor has failed to take the required corrective actions stipulated in the Conditional Certificate. A determination of nonperformance may prevent a contractor from receiving an award of a contract.

HOW TO COMPLETE THE EMPLOYMENT REPORT

Contents

General Information
Part I: Contractor/Subcontractor Information
Part II: Employment Policies and Practices
Part III: Contract Bid Information and Projected and Current Workforce Forms
Signature Page

PART I: CONTRACTOR/SUBCONTRACTOR INFORMATION

Questions 7 – 11: Please provide the required contact information for your company. All contracts must have a designated Equal Employment Officer.

Question 12: If you are a subcontractor, you must state the name of the contractor for whom you are providing the construction services.

Question 13: Please provide the number of permanent employees in your company.

Question 14a-g: The Project Identification Number (PIN) and the Contract Registration ID Number (CT#) can be obtained from the City agency. Provide a description of the trade work you will perform on this project and the address where the work will be performed. Subcontractors can obtain this information from the contract they have with the prime contractor.

Questions 15 – 18: If your company has received a valid Certificate of Approval within the past 36 months, been audited by the United States Department of Labor, Office of Federal Contract Compliance Programs (OFCCP), or if your company has submitted an ER for a different contract for which you have not yet received a compliance certificate, then you only need to complete and submit the following:

- General Information section
- Part I - Contractor/Subcontractor Information
- Form B - Projected Workforce
- Signature Page

If your company is currently waiting for an approval on another contract previously submitted, be certain to identify the date on which you submitted the completed Employment Report, the name of the City contracting agency with which the contract was made, and the name and telephone number of the person to whom the Employment Report was submitted.

If your company was issued a Conditional Certificate of Approval, all required corrective actions must have been taken or DLS will not issue a Continued Certificate.

Question 18: If the company was audited by the OFCCP, also provide the following:

- Identify the reviewing OFCCP office by its name and address
- If an unconditional certificate of compliance was issued by the OFCCP, attach a copy of the certificate in lieu of completing Parts II and III;
- Include copies of all corrective actions and documentation of OFCCP's performance; and
- Provide a copy of all stated OFCCP findings.

Question 19: Please provide a copy of any Collective Bargaining Agreement(s) which is negotiated through an employer trade association on behalf of your organization or any of its affiliates.

PART II: EMPLOYMENT POLICIES AND PRACTICES

Remember to label all documents with the question number for which they are submitted.

Questions 20a – j: You must respond to the questions as to whether or not your firm has documents reflecting written policies, benefits and procedures. If so, then you must identify by name each document in which the policy(ies), procedure(s) and benefit(s) is located and submit copies of all of the document(s). If your firm follows unwritten practices or procedures, include an explanation of how they operate. Please submit the most current document(s), including all applicable amendments. Label each document and/or unwritten practice according to the question to which it corresponds (e.g. 20a, 20b, etc.)

Questions 21a – h: Inquires about the manner/methods by which you comply with the requirements of the Immigration Reform and Control Act of 1986 (IRCA).

Question 22: Inquires into where and how I-9 forms are maintained and stored.

Questions 23a – e: Inquires into whether or not there is a requirement that an applicant or employee be subjected to a medical examination at any given time. Copes of the medical information questionnaire and instructions must be submitted with the Employment Report.

Question 24: Indicate the existence and location of all statements of your firm's Equal Employment Opportunity policy and attach a copy of each statement.

Question 25: Submit any current Affirmative Action Plan(s) created pursuant to Executive Order 11246.

Question 26: If your firm or collective bargaining agreement has an internal grievance procedure, indicate this and submit a copy of the policy and procedure. If unwritten, explain its nature and operation. Explain how your firm's procedure addresses EEO complaints.

Question 27: If your employees have used the procedure in the last three (3) years, please submit an explanation in the format indicated below:

1. Number of complaint(s)	2. Nature of the complaint(s)	3. Position(s) of the complainant(s)	4. Was an investigation conducted? Y/N	5. Current status of the disposition

Question 28: Indicate whether in the past three (3) years complaints have been filed with a court of law or administrative agency, naming your company as a defendant (or respondent) in a complaint alleging violation of any anti-discrimination or affirmative action laws. If yes, develop and submit a log to show, for each administrative/and or judicial action filed, the following information:

1. Name(s) of complainant(s)	2. Administrative agency or court in which action was filed	3. Nature of the complaint(s)	4. Current status	5. If not pending, the complaint's disposition

Question 29: Identify each job for which a physical qualification exists. Identify and explain the physical qualification(s) for each stated job. Submit job descriptions for each job and the reasons for the qualifications.

Question 30: Identify each job for which there exists any qualification related to age, race, color, national origin, sex, creed, disability, marital status, sexual orientation or citizenship status. Identify and explain the specific related qualification for each job stated. Submit job descriptions for each job and the reasons for the qualifications.

PART III: CONTRACT BID INFORMATION AND PROJECTED AND CURRENT WORKFORCE FORMS

FORM A: CONTRACT BID INFORMATION – USE OF SUBCONTRACTORS/TRADES

Your projections for the utilization of subcontractors on the proposed contract are to be provided in this section. A chart has been provided for the identification of subcontractors. Information is to be provided to the extent known at the time the ER is filed for review by DLS. If the subcontractor's name is unknown, then write "unknown". Under "ownership", enter the appropriate race/ethnic and gender code. If the contract is federally funded or assisted and the subcontractor is being utilized in accordance with applicable federal requirements with respect to Minority Business Enterprise or Woman Business Enterprise requirements, enter the appropriate code. This will also apply to state funded contracts with similar requirements for minority and female owned businesses.

FORM B: PROJECTED WORKFORCE FOR WORK TO BE PERFORMED ON THIS PROJECT

For each trade to be engaged by your company for this project, enter the projected workforce for Males and Females by trade classification in the charts provided.

FORM C: CURRENT WORKFORCE FOR WORK TO BE PERFORMED ON THIS PROJECT

For each trade *currently* engaged by your company for all work performed in NYC, enter the current workforce for Males and Females by trade classification in the charts provided.

SIGNATURE PAGE

The signatory of this Employment Report and all other documents submitted to DLS must be an official authorized to enter into a binding legal agreement. The signature page must be completed in its entirety and notarized. Only original signatures will be accepted.

The City of New York Department of Small Business Services
Division of Labor Services Contract Compliance Unit
110 William Street, New York, New York 10038
Phone: (212) 513 - 6323
Fax: (212) 618-8879

CONSTRUCTION EMPLOYMENT REPORT

GENERAL INFORMATION

1. Your contractual relationship in this contract is: Prime contractor_x_ Subcontractor____

1a. Are M/WBE goals attached to this project? Yes ____ No ____

2. Please check one of the following if your firm would like information on how to certify with the City of New York as a:

___Minority Owned Business Enterprise
___Women Owned Business Enterprise
___Disadvantaged Business Enterprise
___Locally Based Business Enterprise
___Emerging Business Enterprise

2a. If you are certified as an **MBE**, **WBE**, **LBE**, **EBE** or **DBE**, what city/state agency are you certified with? _____ Are you DBE certified? Yes ____ No ____

3. Please indicate if you would like assistance from SBS in identifying certified M/WBEs for contracting opportunities: Yes___ No___

4. Is this project subject to a project labor agreement? Yes ____ No ____

5. Are you a Union contractor? Yes ____ No ____ If yes, please list which local(s) you affiliated with _____

6. Are you a Veteran owned company? Yes ____ No ____

PART I: CONTRACTOR/SUBCONTRACTOR INFORMATION

7. _____
Employer Identification Number or Federal Tax I.D. Email Address

8. _____
Company Name

9. _____
Company Address and Zip Code

10. _____
Chief Operating Officer Telephone Number

11. _____
Designated Equal Opportunity Compliance Officer Telephone Number
(If same as Item #10, write "same")

12. _____
Name of Prime Contractor and Contact Person
(If same as Item #8, write "same")

13. Number of employees in your company: _____

14. Contract information:

(a) _____
Contracting Agency (City Agency)

(b) _____
Contract Amount

(c) _____
Procurement Identification Number (PIN)

(d) _____
Contract Registration Number (CT#)

(e) _____
Projected Commencement Date

(f) _____
Projected Completion Date

(g) Description and location of proposed contract:

_____

_____

15. Has your firm been reviewed by the Division of Labor Services (DLS) within the past 36 months and issued a Certificate of Approval? Yes___ No___

If yes, attach a copy of certificate.

16. Has DLS within the past month reviewed an Employment Report submission for your company and issued a Conditional Certificate of Approval? Yes___ No___

If yes, attach a copy of certificate.

NOTE: DLS WILL NOT ISSUE A CONTINUED CERTIFICATE OF APPROVAL IN CONNECTION WITH THIS CONTRACT UNLESS THE REQUIRED CORRECTIVE ACTIONS IN PRIOR CONDITIONAL CERTIFICATES OF APPROVAL HAVE BEEN TAKEN.

17. Has an Employment Report already been submitted for a different contract (not covered by this Employment Report) for which you have not yet received compliance certificate?
Yes___ No___ If yes,

Date submitted: _____
Agency to which submitted: _____
Name of Agency Person: _____
Contract No: _____
Telephone: _____

18. Has your company in the past 36 months been audited by the United States Department of Labor, Office of Federal Contract Compliance Programs (OFCCP)? Yes___ No___

If yes,

(a) Name and address of OFCCP office.

_____

_____

(b) Was a Certificate of Equal Employment Compliance issued within the past 36 months? Yes___ No___

If yes, attach a copy of such certificate.

(c) Were any corrective actions required or agreed to? Yes___ No___

If yes, attach a copy of such requirements or agreements.

(d) Were any deficiencies found? Yes___ No___

If yes, attach a copy of such findings.

19. Is your company or its affiliates a member or members of an employers' trade association which is responsible for negotiating collective bargaining agreements (CBA) which affect construction site hiring? Yes___ No___

If yes, attach a list of such associations and all applicable CBA's.

PART II: DOCUMENTS REQUIRED

20. For the following policies or practices, attach the relevant documents (e.g., printed booklets, brochures, manuals, memoranda, etc.). If the policy(ies) are unwritten, attach a full explanation of the practices. See instructions.

___ (a) Health benefit coverage/description(s) for all management, nonunion and union employees (whether company or union administered)

___ (b) Disability, life, other insurance coverage/description

___ (c) Employee Policy/Handbook

___ (d) Personnel Policy/Manual

___ (e) Supervisor's Policy/Manual

___ (f) Pension plan or 401k coverage/description for all management, nonunion and union employees, whether company or union administered

___ (g) Collective bargaining agreement(s).

___ (h) Employment Application(s)

___ (i) Employee evaluation policy/form(s).

___ (j) Does your firm have medical and/or non-medical (i.e. education, military, personal, pregnancy, child care) leave policy?

21. To comply with the Immigration Reform and Control Act of 1986 when and of whom does your firm require the completion of an I-9 Form?

(a) Prior to job offer	Yes___	No___
(b) After a conditional job offer	Yes___	No___
(c) After a job offer	Yes___	No___
(d) Within the first three days on the job	Yes___	No___
(e) To some applicants	Yes___	No___
(f) To all applicants	Yes___	No___
(g) To some employees	Yes___	No___
(h) To all employees	Yes___	No___

22. Explain where and how completed I-9 Forms, with their supportive documentation, are maintained and made accessible.

_____

_____

23. Does your firm or any of its collective bargaining agreements require job applicants to take a medical examination? Yes___ No___

If yes, is the medical examination given:

(a) Prior to a job offer	Yes___	No___
(b) After a conditional job offer	Yes___	No___
(c) After a job offer	Yes___	No___
(d) To all applicants	Yes___	No___
(e) Only to some applicants	Yes___	No___

If yes, list for which applicants below and attach copies of all medical examination or questionnaire forms and instructions utilized for these examinations.

_____

_____

24. Do you have a written equal employment opportunity (EEO) policy? Yes___ No___

If yes, list the document(s) and page number(s) where these written policies are located.

_____

_____

25. Does the company have a current affirmative action plan(s) (AAP)
_____Minorities and Women
_____Individuals with handicaps
_____Other. Please specify _____

26. Does your firm or collective bargaining agreement(s) have an internal grievance procedure with respect to EEO complaints? Yes___ No___

If yes, please attach a copy of this policy.

If no, attach a report detailing your firm's unwritten procedure for handling EEO complaints.

27. Has any employee, within the past three years, filed a complaint pursuant to an internal grievance procedure or with any official of your firm with respect to equal employment opportunity? Yes___ No___

If yes, attach an internal complaint log. See instructions.

28. Has your firm, within the past three years, been named as a defendant (or respondent) in any administrative or judicial action where the complainant (plaintiff) alleged violation of any anti-discrimination or affirmative action laws? Yes___ No___

If yes, attach a log. See instructions.

29. Are there any jobs for which there are physical qualifications? Yes___ No___

If yes, list the job(s), submit a job description and state the reason(s) for the qualification(s).

_____

_____

30. Are there any jobs for which there are age, race, color, national origin, sex, creed, disability, marital status, sexual orientation, or citizenship qualifications? Yes___ No___

If yes, list the job(s), submit a job description and state the reason(s) for the qualification(s).

_____

_____

SIGNATURE PAGE

I, (print name of authorized official signing)_____ hereby certify that the information submitted herewith is true and complete to the best of my knowledge and belief and submitted with the understanding that compliance with New York City's equal employment requirements, as contained in Chapter 56 of the City Charter, Executive Order No. 50 (1980), as amended, and the implementing Rules and Regulations, is a contractual obligation. I also agree on behalf of the company to submit a certified copy of payroll records to the Division of Labor Services on a monthly basis.

_____

Contractor's Name

_____

Name of person who prepared this Employment Report Title

_____

Name of official authorized to sign on behalf of the contractor Title

_____

Telephone Number

_____

Signature of authorized official Date

If contractors are found to be underutilizing minorities and females in any given trade based on Chapter 56 Section 3H, the Division of Labor Services reserves the right to request the contractor's workforce data and to implement an employment program.

Contractors who fail to comply with the above mentioned requirements or are found to be in noncompliance may be subject to the withholding of final payment.

Willful or fraudulent falsifications of any data or information submitted herewith may result in the termination of the contract between the City and the bidder or contractor and in disapproval of future contracts for a period of up to five years. Further, such falsification may result in civil and/and or criminal prosecution.

To the extent permitted by law and consistent with the proper discharge of DLS' responsibilities under Charter Chapter 56 of the City Charter and Executive Order No. 50 (1980) and the implementing Rules and Regulations, all information provided by a contractor to DLS shall be confidential.

Only original signatures accepted.

Sworn to before me this _____ day of _____ 20 _____

_____

Notary Public Authorized Signature Date

FOR OFFICIAL USE ONLY: File No._____

FORM A CONTRACT BID INFORMATION: USE OF SUBCONTRACTORS/TRADES

1. Do you plan to subcontractor work on this contract? Yes___ No___

2. If yes, complete the chart below.

NOTE: All proposed subcontractors with a subcontract in excess of $750,000 must complete an Employment Report for review and approval before the contract may be awarded and work commences.

SUBCONTRACTOR'S NAME*	OWNERSHIP (ENTER APPROPRIATE CODE LETTERS BELOW)	WORK TO BE PERFORMED BY SUBCONTRACTOR	TRADE PROJECTED FOR USE BY SUBCONTRACTOR	PROJECTED DOLLAR VALUE OF SUBCONTRACT

***If subcontractor is presently unknown, please enter the trade (craft name).**

OWNERSHIP CODES
- W: White
- B: Black
- H: Hispanic
- A: Asian
- N: Native American
- F: Female

FOR OFFICIAL USE ONLY: File No._____

FORM B: PROJECTED WORKFORCE

TRADE CLASSIFICATION CODES

(J) Journeylevel Workers
(H) Helper
(TOT) Total by Column
(A) Apprentice
(TRN) Trainee

For each trade to be engaged by your company for this project, enter the projected workforce for Males and Females by trade classification on the charts below.

Trade: _____

Union Affiliation, if applicable _____

Total (Col. #1-10): _____

Total Minority, Male & Female (Col. #2,3,4,5,7,8,9, & 10): _____

Total Female (Col. #6 – 10): _____

	MALES					FEMALES				
	(1) White Non Hisp.	(2) Black Non Hisp.	(3) Hisp.	(4) Asian	(5) Native Amer.	(6) White Non Hisp.	(7) Black Non Hisp.	(8) Hisp.	(9) Asian	(10) Native Amer.
J										
H										
A										
TRN										
TOT										

What are the recruitment sources for you projected hires (i.e., unions, government employment office, job tap center, community outreach)?

_____

_____

FOR OFFICIAL USE ONLY: File No._____

FORM B PROJECTED WORKFORCE

Trade: _____

Union Affiliation, if applicable _____

Total (Col. #1-10): _____

Total Minority, Male & Female (Col. #2,3,4,5,7,8,9, & 10): _____

Total Female (Col. #6 – 10): _____

	MALES					FEMALES				
	(1) White Non Hisp.	(2) Black Non Hisp.	(3) Hisp.	(4) Asian	(5) Native Amer.	(6) White Non Hisp.	(7) Black Non Hisp.	(8) Hisp.	(9) Asian	(10) Native Amer.
J										
H										
A										
TRN										
TOT										

What are the recruitment sources for you projected hires (i.e., unions, government employment office, job tap center, community outreach)?

_____

_____

FORM C: CURRENT WORKFORCE

TRADE CLASSIFICATION CODES

(J) Journeylevel Workers
(H) Helper
(TOT) Total by Column
(A) Apprentice
(TRN) Trainee

For each trade currently engaged by your company for all work performed in New York City, enter the current workforce for Males and Females by trade classification on the charts below.

Trade: _____

Union Affiliation, if applicable _____

Total (Col. #1-10): _____

Total Minority, Male & Female (Col. #2,3,4,5,7,8,9, & 10): _____

Total Female (Col. #6 – 10): _____

	MALES					FEMALES				
	(1) White Non Hisp.	(2) Black Non Hisp.	(3) Hisp.	(4) Asian	(5) Native Amer.	(6) White Non Hisp.	(7) Black Non Hisp.	(8) Hisp.	(9) Asian	(10) Native Amer.
J										
H										
A										
TRN										
TOT										

What are the recruitment sources for you projected hires (i.e., unions, government employment office, job tap center, community outreach)?

_____

_____

FOR OFFICIAL USE ONLY: File No._____

FORM C: CURRENT WORKFORCE

Trade: _____

Union Affiliation, if applicable _____

Total (Col. #1-10): _____

Total Minority, Male & Female (Col. #2,3,4,5,7,8,9, & 10): _____

Total Female (Col. #6 – 10): _____

	MALES					FEMALES				
	(1) White Non Hisp.	(2) Black Non Hisp.	(3) Hisp.	(4) Asian	(5) Native Amer.	(6) White Non Hisp.	(7) Black Non Hisp.	(8) Hisp.	(9) Asian	(10) Native Amer.
J										
H										
A										
TRN										
TOT										

What are the recruitment sources for you projected hires (i.e., unions, government employment office, job tap center, community outreach)?

_____

_____

(NO TEXT ON THIS PAGE)

The City of New York Department of Small Business Services
Division of Labor Services Contract Compliance Unit
110 William Street, New York, New York 10038
Phone: (212) 513 - 6323
Fax: (212) 618-8879

CONSTRUCTION EMPLOYMENT REPORT

GENERAL INFORMATION

1. Your contractual relationship in this contract is: Prime contractor____ Subcontractor_x_

1a. Are M/WBE goals attached to this project? Yes ____ No ____

2. Please check one of the following if your firm would like information on how to certify with the City of New York as a:

___Minority Owned Business Enterprise
___Women Owned Business Enterprise
___Disadvantaged Business Enterprise
___Locally Based Business Enterprise
___Emerging Business Enterprise

2a. If you are certified as an **MBE**, **WBE**, **LBE**, **EBE** or **DBE**, what city/state agency are you certified with? _____ Are you DBE certified? Yes ____ No ____

3. Please indicate if you would like assistance from SBS in identifying certified M/WBEs for contracting opportunities: Yes___ No___

4. Is this project subject to a project labor agreement? Yes ____ No ____

5. Are you a Union contractor? Yes ____ No ____ If yes, please list which local(s) you affiliated with _____

6. Are you a Veteran owned company? Yes ____ No ____

PART I: CONTRACTOR/SUBCONTRACTOR INFORMATION

7. _____
Employer Identification Number or Federal Tax I.D. Email Address

8. _____
Company Name

9. _____
Company Address and Zip Code

10. _____
Chief Operating Officer Telephone Number

11. _____
Designated Equal Opportunity Compliance Officer Telephone Number
(If same as Item #10, write "same")

12. _____
Name of Prime Contractor and Contact Person
(If same as Item #8, write "same")

13. Number of employees in your company: _____

14. Contract information:

(a) _____
Contracting Agency (City Agency)

(b) _____
Contract Amount

(c) _____
Procurement Identification Number (PIN)

(d) _____
Contract Registration Number (CT#)

(e) _____
Projected Commencement Date

(f) _____
Projected Completion Date

(g) Description and location of proposed contract:

_____

_____

15. Has your firm been reviewed by the Division of Labor Services (DLS) within the past 36 months and issued a Certificate of Approval? Yes___ No___

If yes, attach a copy of certificate.

16. Has DLS within the past month reviewed an Employment Report submission for your company and issued a Conditional Certificate of Approval? Yes___ No___

If yes, attach a copy of certificate.

NOTE: DLS WILL NOT ISSUE A CONTINUED CERTIFICATE OF APPROVAL IN CONNECTION WITH THIS CONTRACT UNLESS THE REQUIRED CORRECTIVE ACTIONS IN PRIOR CONDITIONAL CERTIFICATES OF APPROVAL HAVE BEEN TAKEN.

17. Has an Employment Report already been submitted for a different contract (not covered by this Employment Report) for which you have not yet received compliance certificate?
Yes___ No___ If yes,

Date submitted: _____
Agency to which submitted: _____
Name of Agency Person: _____
Contract No: _____
Telephone: _____

18. Has your company in the past 36 months been audited by the United States Department of Labor, Office of Federal Contract Compliance Programs (OFCCP)? Yes___ No___

If yes,

(a) Name and address of OFCCP office.

_____

_____

(b) Was a Certificate of Equal Employment Compliance issued within the past 36 months? Yes___ No___

If yes, attach a copy of such certificate.

(c) Were any corrective actions required or agreed to? Yes___ No___

If yes, attach a copy of such requirements or agreements.

(d) Were any deficiencies found? Yes___ No___

If yes, attach a copy of such findings.

19. Is your company or its affiliates a member or members of an employers' trade association which is responsible for negotiating collective bargaining agreements (CBA) which affect construction site hiring? Yes___ No___

If yes, attach a list of such associations and all applicable CBA's.

PART II: DOCUMENTS REQUIRED

20. For the following policies or practices, attach the relevant documents (e.g., printed booklets, brochures, manuals, memoranda, etc.). If the policy(ies) are unwritten, attach a full explanation of the practices. See instructions.

___ (a) Health benefit coverage/description(s) for all management, nonunion and union employees (whether company or union administered)

___ (b) Disability, life, other insurance coverage/description

___ (c) Employee Policy/Handbook

___ (d) Personnel Policy/Manual

___ (e) Supervisor's Policy/Manual

___ (f) Pension plan or 401k coverage/description for all management, nonunion and union employees, whether company or union administered

___ (g) Collective bargaining agreement(s).

___ (h) Employment Application(s)

___ (i) Employee evaluation policy/form(s).

___ (j) Does your firm have medical and/or non-medical (i.e. education, military, personal, pregnancy, child care) leave policy?

21. To comply with the Immigration Reform and Control Act of 1986 when and of whom does your firm require the completion of an I-9 Form?

(a) Prior to job offer	Yes___	No___
(b) After a conditional job offer	Yes___	No___
(c) After a job offer	Yes___	No___
(d) Within the first three days on the job	Yes___	No___
(e) To some applicants	Yes___	No___
(f) To all applicants	Yes___	No___
(g) To some employees	Yes___	No___
(h) To all employees	Yes___	No___

22. Explain where and how completed I-9 Forms, with their supportive documentation, are maintained and made accessible.

_____

_____

23. Does your firm or any of its collective bargaining agreements require job applicants to take a medical examination? Yes___ No___

If yes, is the medical examination given:

(a) Prior to a job offer	Yes___	No___
(b) After a conditional job offer	Yes___	No___
(c) After a job offer	Yes___	No___
(d) To all applicants	Yes___	No___
(e) Only to some applicants	Yes___	No___

If yes, list for which applicants below and attach copies of all medical examination or questionnaire forms and instructions utilized for these examinations.

_____

_____

24. Do you have a written equal employment opportunity (EEO) policy? Yes___ No___

If yes, list the document(s) and page number(s) where these written policies are located.

_____

_____

25. Does the company have a current affirmative action plan(s) (AAP)
_____Minorities and Women
_____Individuals with handicaps
_____Other. Please specify _____

26. Does your firm or collective bargaining agreement(s) have an internal grievance procedure with respect to EEO complaints? Yes___ No___

If yes, please attach a copy of this policy.

If no, attach a report detailing your firm's unwritten procedure for handling EEO complaints.

27. Has any employee, within the past three years, filed a complaint pursuant to an internal grievance procedure or with any official of your firm with respect to equal employment opportunity? Yes___ No___

If yes, attach an internal complaint log. See instructions.

28. Has your firm, within the past three years, been named as a defendant (or respondent) in any administrative or judicial action where the complainant (plaintiff) alleged violation of any anti-discrimination or affirmative action laws? Yes___ No___

If yes, attach a log. See instructions.

29. Are there any jobs for which there are physical qualifications? Yes___ No___

If yes, list the job(s), submit a job description and state the reason(s) for the qualification(s).

_____

_____

30. Are there any jobs for which there are age, race, color, national origin, sex, creed, disability, marital status, sexual orientation, or citizenship qualifications? Yes___ No___

If yes, list the job(s), submit a job description and state the reason(s) for the qualification(s).

_____

_____

SIGNATURE PAGE

I, (print name of authorized official signing)_____ hereby certify that the information submitted herewith is true and complete to the best of my knowledge and belief and submitted with the understanding that compliance with New York City's equal employment requirements, as contained in Chapter 56 of the City Charter, Executive Order No. 50 (1980), as amended, and the implementing Rules and Regulations, is a contractual obligation. I also agree on behalf of the company to submit a certified copy of payroll records to the Division of Labor Services on a monthly basis.

_____

Contractor's Name

_____

Name of person who prepared this Employment Report Title

_____

Name of official authorized to sign on behalf of the contractor Title

_____

Telephone Number

_____

Signature of authorized official Date

If contractors are found to be underutilizing minorities and females in any given trade based on Chapter 56 Section 3H, the Division of Labor Services reserves the right to request the contractor's workforce data and to implement an employment program.

Contractors who fail to comply with the above mentioned requirements or are found to be in noncompliance may be subject to the withholding of final payment.

Willful or fraudulent falsifications of any data or information submitted herewith may result in the termination of the contract between the City and the bidder or contractor and in disapproval of future contracts for a period of up to five years. Further, such falsification may result in civil and/and or criminal prosecution.

To the extent permitted by law and consistent with the proper discharge of DLS' responsibilities under Charter Chapter 56 of the City Charter and Executive Order No. 50 (1980) and the implementing Rules and Regulations, all information provided by a contractor to DLS shall be confidential.

Only original signatures accepted.

Sworn to before me this _____ day of _____ 20 _____

_____

Notary Public Authorized Signature Date

FOR OFFICIAL USE ONLY: File No._____

FORM

CONTRACT BID INFORMATION: USE OF SUBCONTRACTORS/TRADES

1. Do you plan to subcontractor work on this contract? Yes___ No___

2. If yes, complete the chart below.

NOTE: All proposed subcontractors with a subcontract in excess of $750,000 must complete an Employment Report for review and approval before the contract may be awarded and work commences.

SUBCONTRACTOR'S NAME*	OWNERSHIP (ENTER APPROPRIATE CODE LETTERS BELOW)	WORK TO BE PERFORMED BY SUBCONTRACTOR	TRADE PROJECTED FOR USE BY SUBCONTRACTOR	PROJECTED DOLLAR VALUE OF SUBCONTRACT

***If subcontractor is presently unknown, please enter the trade (craft name).**

OWNERSHIP CODES
- W: White
- B: Black
- H: Hispanic
- A: Asian
- N: Native American
- F: Female

FOR OFFICIAL USE ONLY: File No._____

FORM B: PROJECTED WORKFORCE

TRADE CLASSIFICATION CODES

(J) Journeylevel Workers
(H) Helper
(TOT) Total by Column
(A) Apprentice
(TRN) Trainee

For each trade to be engaged by your company for this project, enter the projected workforce for Males and Females by trade classification on the charts below.

Trade: _____

Union Affiliation, if applicable _____

Total (Col. #1-10): _____

Total Minority, Male & Female (Col. #2,3,4,5,7,8,9, & 10): _____

Total Female (Col. #6 – 10): _____

	MALES					FEMALES				
	(1) White Non Hisp.	(2) Black Non Hisp.	(3) Hisp.	(4) Asian	(5) Native Amer.	(6) White Non Hisp.	(7) Black Non Hisp.	(8) Hisp.	(9) Asian	(10) Native Amer.
J										
H										
A										
TRN										
TOT										

What are the recruitment sources for you projected hires (i.e., unions, government employment office, job tap center, community outreach)?

_____

_____

FOR OFFICIAL USE ONLY: File No._____

FORM PROJECTED WORKFORCE

Trade: _____

Union Affiliation, if applicable _____

Total (Col. #1-10): _____

Total Minority, Male & Female (Col. #2,3,4,5,7,8,9, & 10): _____

Total Female (Col. #6 – 10): _____

	MALES					FEMALES				
	(1) White Non Hisp.	(2) Black Non Hisp.	(3) Hisp.	(4) Asian	(5) Native Amer.	(6) White Non Hisp.	(7) Black Non Hisp.	(8) Hisp.	(9) Asian	(10) Native Amer.
J										
H										
A										
TRN										
TOT										

What are the recruitment sources for you projected hires (i.e., unions, government employment office, job tap center, community outreach)?

_____

_____

FORM C: CURRENT WORKFORCE

TRADE CLASSIFICATION CODES

(J) Journeylevel Workers
(H) Helper
(TOT) Total by Column
(A) Apprentice
(TRN) Trainee

For each trade currently engaged by your company for all work performed in New York City, enter the current workforce for Males and Females by trade classification on the charts below.

Trade: _____

Union Affiliation, if applicable _____

Total (Col. #1-10): _____

Total Minority, Male & Female (Col. #2,3,4,5,7,8,9, & 10): _____

Total Female (Col. #6 – 10): _____

	MALES					FEMALES				
	(1) White Non Hisp.	(2) Black Non Hisp.	(3) Hisp.	(4) Asian	(5) Native Amer.	(6) White Non Hisp.	(7) Black Non Hisp.	(8) Hisp.	(9) Asian	(10) Native Amer.
J										
H										
A										
TRN										
TOT										

What are the recruitment sources for you projected hires (i.e., unions, government employment office, job tap center, community outreach)?

_____

_____

FOR OFFICIAL USE ONLY: File No._____

FORM C: CURRENT WORKFORCE

Trade: _____

Union Affiliation, if applicable _____

Total (Col. #1-10): _____

Total Minority, Male & Female (Col. #2,3,4,5,7,8,9, & 10): _____

Total Female (Col. #6 – 10): _____

	MALES					FEMALES				
	(1) White Non Hisp.	(2) Black Non Hisp.	(3) Hisp.	(4) Asian	(5) Native Amer.	(6) White Non Hisp.	(7) Black Non Hisp.	(8) Hisp.	(9) Asian	(10) Native Amer.
J										
H										
A										
TRN										
TOT										

What are the recruitment sources for you projected hires (i.e., unions, government employment office, job tap center, community outreach)?

_____

_____

FOR OFFICIAL USE ONLY: File No._____

(NO TEXT ON THIS PAGE)

The City of New York Department of Small Business Services
Division of Labor Services Contract Compliance Unit
110 William Street, New York, New York 10038
Phone: (212) 513 – 6323 Fax: (212) 618-8879

Date _____ File Number _____

LESS THAN $750,000 SUBCONTRACT CERTIFICATE
(CITY, STATE AND ICIP ONLY)

Are you currently certified as one of the following? Please check yes or no:

MBE Yes ___No ___ WBE Yes ___No ___ LBE Yes ___No ___

DBE Yes___No___ EBE Yes ___ No ___

If you are certified as an MBE, WBE, LBE, EBE or DBE, what city/state agency are you certified with?

_____

Please check one of the following if your firm would like information on how to certify with the City of New York as a:

___Minority Owned Business Enterprise ___Locally based Business Enterprise

___Women Owned Business Enterprise ___Emerging Business Enterprise

___Disadvantaged Business Enterprise

_____
Company Name Employer Identification Number or Federal Tax I.D

_____
Company Address and Zip Code

_____
Contact Person (First Name, Last Name) Telephone Number

_____
Fax Number E-mail Address

Description and location of proposed subcontract:_____
_____
_____

Are you a Union contractor? Yes ____ No ____ If yes, please list which local(s) you affiliated with

_____

Are you a Veteran owned company? Yes ____ No ____

_____ _____
Procurement Identification Number (PIN) Contract Registration Number (CT#)
(City contracts only) (City contracts only)

Revised 8/13
FOR OFFICIAL USE ONLY: File No._____

Block and Lot Number
(ICIP projects only)

Contract Amount

I, (print name of authorized official signing)_____ hereby certify that I am authorized by the above-named subcontractor to certify that said subcontractor's proposed contract with the above named owner or City agency is less than $750,000. This affirmation is made in accordance with NYC Charter Chapter 56, Executive Order No. 50 (1980) and the implementing Rules.

Willful or fraudulent falsifications of any data or information submitted herewith may result in the termination of the contract between the City and the bidder or contractor and in disapproval of future contracts for a period of up to five years. Further, such falsification may result in civil and/and or criminal prosecution.

Signature of authorized official

Date

Only original signatures accepted.

Sworn to before me this _____ day of _____ 20 _____

Notary Public

Authorized Signature

Date

FOR OFFICIAL USE ONLY: File No._____

CITY OF NEW YORK
DEPARTMENT OF DESIGN AND CONSTRUCTION
DIVISION OF INFRASTRUCTURE

ADDENDA CONTROL SHEET

BID OPENING DATE: MARCH 7, 2017

PROJECT NO.: BED798

TITLE: REPLACEMENT OF TRUNK AND DISTRIBUTION WATER MAINS, COMBINED SEWER AND APPURTENANCES IN FLATBUSH AVENUE BETWEEN STERLING PLACE AND 8TH AVENUE, ETC., BOROUGH OF BROOKLYN.

ADDENDA ISSUED	No. OF DRAWINGS	DATE
#1: Additional Amendments		3/1/2017

ATTACH TO CONTRACT DOCUMENTS

THE CITY OF NEW YORK
DEPARTMENT OF DESIGN AND CONSTRUCTION
INFRASTRUCTURE DIVISION
BUREAU OF DESIGN

PROJECT ID: BED798

REPLACEMENT OF TRUNK AND DISTRIBUTION WATER MAINS, COMBINED SEWER AND APPURTENANCES IN FLATBUSH AVENUE BETWEEN STERLING PLACE AND 8TH AVENUE, ETC.
Together With All Work Incidental Thereto
BOROUGH OF BROOKLYN

ADDENDUM NO. 1

DATED: March 1, 2017

This Addendum is issued for the purpose of amending the requirements of the contract documents and is hereby made part of said contract documents to the same extent as if it was originally included therein.

(1) For additional information, see the attached one (1) page of "Questions Submitted by Bidders and DDC's Responses".

By signing in the space provided below, the bidder acknowledges receipt of the one (1) page of this Addendum plus one (1) page of Attachment.

THIS ADDENDUM MUST BE SIGNED BY ALL BIDDERS AND ATTACHED TO THEIR BIDS.

for Purnima Dhallo
GURDIP SAINI, P.E.
Associate Commissioner/Design I

Triumph Const Corp.
Name of Bidder

By:

Department of Design and Construction

INFRASTRUCTURE DIVISION
BUREAU OF DESIGN

VOLUME 1 OF 3

PROJECT ID: BED798

REPLACEMENT OF TRUNK AND DISTRIBUTION WATER MAINS, COMBINED SEWER AND APPURTENANCES IN FLATBUSH AVENUE BETWEEN STERLING PLACE AND 8TH AVENUE, ETC.

INCLUDING SEWER, WATER MAIN, 8TH AVENUE TRIANGLE STREETSCAPE, NECKDOWNS, STREET LIGHTING, AND TRAFFIC SIGNAL WORK

Together with All Work Incidental Thereto
BOROUGH OF BROOKLYN
CITY OF NEW YORK

_____
Contractor

_____

Dated_____, **20**___

_____

Department of Design and Construction

THE CITY OF NEW YORK
DEPARTMENT OF DESIGN AND CONSTRUCTION
DIVISION OF INFRASTRUCTURE

30-30 THOMSON AVENUE
LONG ISLAND CITY, NEW YORK 11101-3045
TELEPHONE (718) 391-1000
WEBSITE www1.nyc.gov/site/ddc/index.page

VOLUME 2 OF 3

INFORMATION FOR BIDDERS
CONTRACT
PERFORMANCE AND PAYMENT BONDS
PREVAILING WAGE SCHEDULE

FOR FURNISHING ALL LABOR AND MATERIALS NECESSARY AND REQUIRED FOR:

PROJECT ID: BED798

REPLACEMENT OF TRUNK AND DISTRIBUTION WATER MAINS, COMBINED SEWER AND APPURTENANCES IN FLATBUSH AVENUE BETWEEN STERLING PLACE AND 8TH AVENUE, ETC.

INCLUDING SEWER, WATER MAIN, 8TH AVENUE TRIANGLE STREETSCAPE, NECKDOWNS, STREET LIGHTING, AND TRAFFIC SIGNAL WORK

Together with All Work Incidental Thereto
BOROUGH OF BROOKLYN
CITY OF NEW YORK

FOR THE DEPARTMENT OF ENVIRONMENTAL PROTECTION
PREPARED BY
IN-HOUSE DESIGN

DECEMBER 28, 2016

17-079

Department of Design and Construction

THE CITY OF NEW YORK
DEPARTMENT OF DESIGN AND CONSTRUCTION
DIVISION OF INFRASTRUCTURE

30-30 THOMSON AVENUE
LONG ISLAND CITY, NEW YORK 11101-3045
TELEPHONE (718) 391-1000
WEBSITE www1.nyc.gov/site/ddc/index.page

VOLUME 2 OF 3

INFORMATION FOR BIDDERS
CONTRACT
PERFORMANCE AND PAYMENT BONDS
PREVAILING WAGE SCHEDULE

FOR FURNISHING ALL LABOR AND MATERIALS NECESSARY AND REQUIRED FOR:

FOR THE DEPARTMENT OF ENVIRONMENTAL PROTECTION
PREPARED BY
IN-HOUSE DESIGN

DECEMBER 28, 2016

PAID SICK LEAVE LAW CONTRACT RIDER

Introduction and General Provisions

The Earned Sick Time Act, also known as the Paid Sick Leave Law ("PSLL"), requires covered employees who annually perform more than 80 hours of work in New York City to be provided with paid sick time.[1] Contractors of the City of New York or of other governmental entities may be required to provide sick time pursuant to the PSLL.

The PSLL became effective on April 1, 2014, and is codified at Title 20, Chapter 8, of the New York City Administrative Code. It is administered by the City's Department of Consumer Affairs ("DCA"); DCA's rules promulgated under the PSLL are codified at Chapter 7 of Title 6 of the Rules of the City of New York ("Rules").

Contractor agrees to comply in all respects with the PSLL and the Rules, and as amended, if applicable, in the performance of this agreement. Contractor further acknowledges that such compliance is a material term of this agreement and that failure to comply with the PSLL in performance of this agreement may result in its termination.

Contractor must notify the Agency Chief Contracting Officer of the City agency or other entity with whom it is contracting in writing within ten (10) days of receipt of a complaint (whether oral or written) regarding the PSLL involving the performance of this agreement. Additionally, Contractor must cooperate with DCA's education efforts and must comply with DCA's subpoenas and other document demands as set forth in the PSLL and Rules.

The PSLL is summarized below for the convenience of Contractor. Contractor is advised to review the PSLL and Rules in their entirety. On the website www.nyc.gov/PaidSickLeave there are links to the PSLL and the associated Rules as well as additional resources for employers, such as Frequently Asked Questions, timekeeping tools and model forms, and an event calendar of upcoming presentations and webinars at which Contractor can get more information about how to comply with the PSLL. Contractor acknowledges that it is responsible for compliance with the PSLL notwithstanding any inconsistent language contained herein.

Pursuant to the PSLL and the Rules:

Applicability, Accrual, and Use

An employee who works within the City of New York for more than eighty hours in any consecutive 12-month period designated by the employer as its "calendar year" pursuant to the PSLL ("Year") must be provided sick time. Employers must provide a minimum of one hour of sick time for every 30 hours worked by an employee and compensation for such sick time must

---

[1] Pursuant to the PSLL, if fewer than five employees work for the same employer, as determined pursuant to New York City Administrative Code §20-912(g), such employer has the option of providing such employees uncompensated sick time.

be provided at the greater of the employee's regular hourly rate or the minimum wage. Employers are not required to provide more than forty hours of sick time to an employee in any Year.

An employee has the right to determine how much sick time he or she will use, provided that employers may set a reasonable minimum increment for the use of sick time not to exceed four hours per day. In addition, an employee may carry over up to forty hours of unused sick time to the following Year, provided that no employer is required to allow the use of more than forty hours of sick time in a Year or carry over unused paid sick time if the employee is paid for such unused sick time and the employer provides the employee with at least the legally required amount of paid sick time for such employee for the immediately subsequent Year on the first day of such Year.

An employee entitled to sick time pursuant to the PSLL may use sick time for any of the following:

- such employee's mental illness, physical illness, injury, or health condition or the care of such illness, injury, or condition or such employee's need for medical diagnosis or preventive medical care;
- such employee's care of a family member (an employee's child, spouse, domestic partner, parent, sibling, grandchild or grandparent, or the child or parent of an employee's spouse or domestic partner) who has a mental illness, physical illness, injury or health condition or who has a need for medical diagnosis or preventive medical care;
- closure of such employee's place of business by order of a public official due to a public health emergency; or
- such employee's need to care for a child whose school or childcare provider has been closed due to a public health emergency.

An employer must not require an employee, as a condition of taking sick time, to search for a replacement. However, an employer may require an employee to provide: reasonable notice of the need to use sick time; reasonable documentation that the use of sick time was needed for a reason above if for an absence of more than three consecutive work days; and/or written confirmation that an employee used sick time pursuant to the PSLL. However, an employer may not require documentation specifying the nature of a medical condition or otherwise require disclosure of the details of a medical condition as a condition of providing sick time and health information obtained solely due to an employee's use of sick time pursuant to the PSLL must be treated by the employer as confidential.

If an employer chooses to impose any permissible discretionary requirement as a condition of using sick time, it must provide to all employees a written policy containing those requirements, using a delivery method that reasonably ensures that employees receive the policy. If such employer has not provided its written policy, it may not deny sick time to an employee because of non-compliance with such a policy.

Sick time to which an employee is entitled must be paid no later than the payday for the next regular payroll period beginning after the sick time was used.

Exemptions and Exceptions

Notwithstanding the above, the PSLL does not apply to any of the following:

- an independent contractor who does not meet the definition of employee under section 190(2) of the New York State Labor Law;
- an employee covered by a valid collective bargaining agreement in effect on April 1, 2014 until the termination of such agreement;
- an employee in the construction or grocery industry covered by a valid collective bargaining agreement if the provisions of the PSLL are expressly waived in such collective bargaining agreement;
- an employee covered by another valid collective bargaining agreement if such provisions are expressly waived in such agreement and such agreement provides a benefit comparable to that provided by the PSLL for such employee;
- an audiologist, occupational therapist, physical therapist, or speech language pathologist who is licensed by the New York State Department of Education and who calls in for work assignments at will, determines his or her own schedule, has the ability to reject or accept any assignment referred to him or her, and is paid an average hourly wage that is at least four times the federal minimum wage;
- an employee in a work study program under Section 2753 of Chapter 42 of the United States Code;
- an employee whose work is compensated by a qualified scholarship program as that term is defined in the Internal Revenue Code, Section 117 of Chapter 20 of the United States Code; or
- a participant in a Work Experience Program (WEP) under section 336-c of the New York State Social Services Law.

Retaliation Prohibited

An employer may not threaten or engage in retaliation against an employee for exercising or attempting in good faith to exercise any right provided by the PSLL. In addition, an employer may not interfere with any investigation, proceeding, or hearing pursuant to the PSLL.

Notice of Rights

An employer must provide its employees with written notice of their rights pursuant to the PSLL. Such notice must be in English and the primary language spoken by an employee, provided that DCA has made available a translation into such language. Downloadable notices are available on DCA's website at http://www.nyc.gov/html/dca/html/law/PaidSickLeave.shtml.

Any person or entity that willfully violates these notice requirements is subject to a civil penalty in an amount not to exceed fifty dollars for each employee who was not given appropriate notice.

Records

An employer must retain records documenting its compliance with the PSLL for a period of at least three years, and must allow DCA to access such records in furtherance of an investigation related to an alleged violation of the PSLL.

Enforcement and Penalties

Upon receiving a complaint alleging a violation of the PSLL, DCA has the right to investigate such complaint and attempt to resolve it through mediation. Within 30 days of written notification of a complaint by DCA, or sooner in certain circumstances, the employer must provide DCA with a written response and such other information as DCA may request. If DCA believes that a violation of the PSLL has occurred, it has the right to issue a notice of violation to the employer.

DCA has the power to grant an employee or former employee all appropriate relief as set forth in New York City Administrative Code 20-924(d). Such relief may include, among other remedies, treble damages for the wages that should have been paid, damages for unlawful retaliation, and damages and reinstatement for unlawful discharge. In addition, DCA may impose on an employer found to have violated the PSLL civil penalties not to exceed $500 for a first violation, $750 for a second violation within two years of the first violation, and $1,000 for each succeeding violation within two years of the previous violation.

More Generous Polices and Other Legal Requirements

Nothing in the PSLL is intended to discourage, prohibit, diminish, or impair the adoption or retention of a more generous sick time policy, or the obligation of an employer to comply with any contract, collective bargaining agreement, employment benefit plan or other agreement providing more generous sick time. The PSLL provides minimum requirements pertaining to sick time and does not preempt, limit or otherwise affect the applicability of any other law, regulation, rule, requirement, policy or standard that provides for greater accrual or use by employees of sick leave or time, whether paid or unpaid, or that extends other protections to employees. The PSLL may not be construed as creating or imposing any requirement in conflict with any federal or state law, rule or regulation.

HIRING AND EMPLOYMENT RIDER:

HIRENYC AND REPORTING REQUIREMENTS

Introduction

This Rider shall apply to all contracts for goods, services, and construction with a value of one million dollars ($1,000,000.00) or more, provided, however, that certain requirements of the Rider shall only apply as indicated below. This Rider addresses the HireNYC process, including reporting obligations under the HireNYC process, and certain other reporting requirements imposed by law. In general, the HireNYC process under this Rider requires the Contractor to enroll with the HireNYC portal for the City of New York ("the City") found within the Department of Small Business Services's ("SBS") website, to disclose all entry to mid-level job opportunities described in this Rider arising from this contract and located in New York City, and to agree to interview qualified candidates from HireNYC for those opportunities.

HireNYC Requirements

A. Enrollment

The Contractor shall enroll with the HireNYC system, found at www.nyc.gov/sbs, within thirty (30) days after the registration of this Contract pursuant to Section 328 of the New York City Charter. The Contractor shall provide information about the business, designate a primary contact and say whether it intends to hire for any entry to mid-level job opportunities arising from this contract and located in New York City, and, if so, the approximate start date of the first hire.

B. Job Posting Requirements

Once enrolled in HireNYC, the Contractor agrees to update the HireNYC portal with all entry to mid-level job opportunities arising from this contract and located in New York City, if any, which shall be defined as jobs requiring no more than an associate degree, as provided by the New York State Department of Labor (see Column F of https://labor.ny.gov/stats/2012-2022-NYS-Employment-Prospects.xls). The information to be updated includes the types of entry and mid-level positions made available from the work arising from the contract and located in New York City, the number of positions, the anticipated schedule of initiating the hiring process for these positions, and the contact information for the Contractor's representative charged with overseeing hiring. The Contractor must update the HireNYC portal with any hiring needs arising from the contract and located in New York City, and the requirements of the jobs to be filled, no less than three weeks prior to the intended first day of employment for each new position, except with the permission of SBS, not to be unreasonably withheld, and must also update the HireNYC portal as set forth below.

After enrollment through HireNYC and submission of relevant information, SBS will work with the Contractor to develop a recruitment plan which will outline the candidate screening process,

and will provide clear instructions as to when, where, and how interviews will take place. HireNYC will screen applicants based on employer requirements and refer applicants whom it believes are qualified to the Contractor for interviews. The Contractor must interview referred applicants whom it believes are qualified.

After completing an interview of a candidate referred by HireNYC, the Contractor must provide feedback via the portal within twenty (20) business days to indicate which candidates were interviewed and hired, if any. In addition, the Contractor shall provide the start date of new hires, and additional information reasonably related to such hires, within twenty (20) business days after the start date. In the event the Contractor does not have any job openings covered by this Rider in any given year, the Contractor shall be required to provide an annual update to HireNYC to that effect. For this purpose, the reporting year shall run from the date of the registration of the contract and each anniversary date.

These requirements do not limit the Contractor's ability to assess the qualifications of prospective workers, and to make final hiring and retention decisions. No provision of this Rider shall be interpreted so as to require the Contractor to employ any particular worker.

In addition, the provisions of this Rider shall not apply to positions that the Contractor intends to fill with employees employed pursuant to the job retention provision of Section 22-505 of the Administrative Code of the City of New York. The Contractor shall not be required to report such openings with HireNYC. However, the Contractor shall enroll with the HireNYC system pursuant to Section A, above, and, if such positions subsequently become open, then the remaining provisions of this Rider will apply.

C. Breach and Liquidated Damages

If the Contractor fails to comply with the terms of the contract and this Rider (1) by not enrolling its business with HireNYC; (2) by not informing HireNYC, as required, of open positions; or (3) by failing to interview a qualified candidate, the contracting agency may assess liquidated damages in the amount of two-thousand five hundred dollars ($2,500.00) per breach. For all other events of noncompliance with the terms of this Rider, the agency may assess liquidated damages in the amount of five hundred dollars ($500) per breach.

Furthermore, in the event the Contractor breaches the requirements of this Rider during the term of the contract, the City may hold the Contractor in default of this contract.

Audit Compliance

In addition to the auditing requirements set forth in other parts of the contract, the Contractor shall permit SBS and the City to inspect any and all records concerning or relating to job openings or the hiring of individuals for work arising from the contract and located in New York City. The Contractor shall permit an inspection within seven (7) business days of the request.

Other Reporting Requirements

The Contractor shall report to the City, on a monthly basis, all information reasonably requested by the City that is necessary for the City to comply with any reporting requirements imposed by law or rule, including any requirement that the City maintain a publicly accessible database. In addition, the Contractor agrees to comply with all reporting requirements imposed by law or rule, or as otherwise requested by the City.

Construction Requirements

Construction contractors shall comply with the HireNYC requirements set forth above for all non-trades jobs (e.g., for an administrative position arising out of the work of the contract and located in New York City) as set forth above.

In addition, construction contractors shall reasonably cooperate with SBS and the City on specific outreach events, including Hire on the Spot events, for the hiring of trades workers for the work of this contract.

Further, this contract shall be subject to a project labor agreement if so required elsewhere in this contract.

Federal Hiring Requirements

The Contractor shall comply with all federal hiring requirements as may be set forth elsewhere in this contract, including, as applicable:

- Section 3 of the HUD Act of 1968, which requires, to the greatest extent feasible, economic opportunities for 30 percent of new hires be given to low- and very low-income persons, particularly persons who are recipients of HUD assistance for housing.

- Executive Order 11246, which prohibits discrimination in employment due to race, color, religion, sex or national origin, and requires the implementation of goals for minority and female participation for work involving any Construction trade.

(NO TEXT ON THIS PAGE)

NEW YORK CITY STANDARD CONSTRUCTION CONTRACT (DEC. 2013)
INSURANCE RIDER

The following provisions supersede the corresponding provisions in the December 2013 version of the New York City Standard Construction Contract:

1. Section 22.1.1(c) provides as follows:

   22.1.1(c) If the **Work** requires a permit from the Department of Buildings pursuant to 1 RCNY Section 101-08, the **Contractor** shall provide Commercial General Liability Insurance with limits of at least those required by 1 RCNY section 101-08 or greater limits provided by the Agency in Schedule A. If the Work does not require such a permit, the minimum limits shall be those provided for in Schedule A.

2. Section 22.3.3 provides as follows:

   22.3.3 For policies provided pursuant to all of Article 22.1 other than Article 22.1.2, the **Contractor** shall submit one or more Certificates of Insurance on forms acceptable to the **Commissioner**. All such Certificates of Insurance shall certify (a) the issuance and effectiveness of such policies of insurance, each with the specified minimum limits (b) for insurance secured pursuant to Article 22.1.1 that the **City** and any other entity specified in Schedule A is an Additional Insured thereunder; (c) in the event insurance is required pursuant to Article 22.1.6 and/or Article 22.1.7, that the City is an Additional Insured thereunder; and (d) the company code issued to the insurance company by the National Association of Insurance Commissioners (the NAIC number). All such Certificates of Insurance shall be accompanied by the required additional insured endorsements and either a duly executed "Certification by Insurance Broker or Agent" in the form contained in Part III of Schedule A or copies of all policies referenced in such Certificate of Insurance as certified by an authorized representative of the issuing insurance carrier. If any policy is not available at the time of submission, certified binders may be submitted until such time as the policy is available, at which time a certified copy of the policy shall be submitted.

(NO TEXT ON THIS PAGE)

NOTICE TO BIDDERS

Please be advised that the City of New York has issued a new Standard Construction Contract. The new Contract, which is incorporated in this bid, is significantly different from the 2008 version previously used by the City. A listing of some of the significant changes is provided below. This notice is only a partial listing. Please refer to the Contract itself for a full understanding of the changes and the actual text of the changes that were made. The text of the revised Standard Construction Contract is the controlling document should there be any discrepancies between this notice and the Standard Construction Contract.

Significant changes include the following:

ARTICLE 11 DAMAGES CAUSED BY DELAYS

In 2008, the City embarked on a pilot project to test the use of new construction contract language altering the allocation of the risk of project delays, as between the City and the contractor. The City has determined to make the pilot project language the standard language for all City construction contracts. Accordingly, there is now one Standard City Construction Contract that is to be used by all agencies for all bids released after the release of the new contract. The damages for delay language is Article 11. Please note that changes have been made to the damages for delay provisions from the pilot to the adopted version.

ARTICLE 22 INSURANCE

Changes have been made to the insurance provisions, including incorporating requirements that the insurance provided comply with recent NYC Department of Buildings regulations specifying required dollar limits for CGL insurance for certain projects and requiring proof of builder's risk insurance prior to Work commencing rather than within 10 days of award.

ARTICLE 26 EXTRA WORK

The percentage paid for overhead for Extra Work pursuant to Section 26.1.11 is increased from 10% to 12% and the calculation of Worker's Compensation insurance costs reimbursed for Extra Work has been clarified.

ARTICLE 37 LABOR LAW REQUIREMENTS
ARTICLE 38 PAYROLL REPORTS

The provisions governing Labor Law provisions have been tightened, including requirements the employee identification cards include a photo (unless the requirement is waived), a prohibition on cash payments to employees and subcontractors, and clear enforcement authority requirements.

ARTICLE 70 ELECTRONIC FILING

A provision is added to make mandatory the electronic filing of certain alteration permits with the Department of Buildings.

Other significant changes include the following:

ARTICLE 7 INDEMNIFICATION

Changes have been made to the indemnification provisions.

ARTICLE14 FINAL ACCEPTANCE OF WORK
ARTICLE 44 SUBSTANTIAL COMPLETION PAYMENT

The Commissioner is no longer required to issue a substantial completion determination in addition to the already existing requirement that the Engineer issue a substantial completion determination and reach an agreement on a punch list of remaining work. Now, the Engineer, when issuing the punch list to the Contractor, must also include a proposed schedule for the completion of the punch list. The Contractor may propose an alternative schedule that is subject to the approval of the Engineer. If the Contractor fails to respond to the Engineer's proposed schedule, the Engineer's schedule is deemed accepted.

ARTICLE 15 LIQUIDATED DAMAGES

The contract is revised to match Schedule A to provide that liquidated damages are available only until substantial completion.

ARTICLE 17 SUBCONTRACTS

The requirements for prior approval of subcontractors, and for contractors to be responsible for the actions of their subcontractors, have been tightened. The requirement that the Contractor list subcontractors in the City's Payee Information Portal has been added; the provision was previously attached as a rider.

ARTICLE 19 SECURITY DEPOSIT

The provisions governing the return of bid deposits are clarified.

ARTICLE 20 PAYMENT GUARANTEE

The Payment Guaranty provisions, which apply when the City does not require the Contractor to obtain payment bonds, has been significantly revised to track the requirements of State Finance law 137.

ARTICLE 28 RECORDKEEPING FOR EXTRA OR DISPUTED WORK

The recordkeeping requirement that currently apply to payments for Time & Materials for extra work are expressly made applicable to regular work that is paid for on a T & M basis.

ARTICLE 35 EMPLOYEES

The whistleblower provisions of local law are added to the construction contract. They previously have been attached as a rider.

ARTICLE 38 PAYROLL REPORTS
ARTICLE 77 RECORDS RETENTION

Requirements that records be maintained for six years and directions on how such records must be made available.

ARTICLE 42 PARTIAL PAYMENTS

Increased flexibility has been provided for when contractors may submit invoices.

ARTICLE 62 TAX EXEMPTION

The provisions identifying the State tax exemption for municipalities are revised to more clearly describe State law.

(NO TEXT ON THIS PAGE)

CITY OF NEW YORK

DEPARTMENT OF
DESIGN AND CONSTRUCTION
DIVISION OF INFRASTRUCTURES

INFORMATION FOR BIDDERS

JUNE 2015

(NO TEXT ON THIS PAGE)

CITY OF NEW YORK CITY
DEPARTMENT OF DESIGN AND CONSTRUCTION
INFORMATION FOR BIDDERS

TABLE OF CONTENTS

SECTION 1.	DESCRIPTION AND LOCATION OF WORK	1
SECTION 2.	TIME AND PLACE FOR RECEIPT OF BIDS	1
SECTION 3.	DEFINITIONS	1
SECTION 4.	INVITATION FOR BIDS AND CONTRACT DOCUMENTS	1
SECTION 5.	PRE-BID CONFERENCE	2
SECTION 6.	AGENCY CONTACT	2
SECTION 7.	BIDDER'S OATH	2
SECTION 8.	EXAMINATION AND VIEWING OF SITE, CONSIDERATION OF OTHER SOURCES OF INFORMATION AND CHANGED CONDITIONS	2
SECTION 9.	EXAMINATION OF PROPOSED CONTRACT	3
SECTION 10.	FORM OF BID	3
SECTION 11.	IRREVOCABILITY OF BID	3
SECTION 12.	ACKNOWLEDGMENT OF AMENDMENTS	4
SECTION 13.	BID SAMPLES AND DESCRIPTIVE LITERATURE	4
SECTION 14.	PROPRIETARY INFORMATION/TRADE SECRETS	4
SECTION 15.	PRE-OPENING MODIFICATION OR WITHDRAWAL OF BIDS	4
SECTION 16.	BID EVALUATION AND AWARD	4
SECTION 17.	LATE BIDS, LATE WITHDRAWALS AND LATE MODIFICATIONS	5
SECTION 18.	WITHDRAWAL OF BIDS.	5
SECTION 19.	MISTAKE IN BIDS	5
SECTION 20.	LOW TIE BIDS	6
SECTION 21.	REJECTION OF BIDS	6
SECTION 22.	RIGHT TO APPEAL DETERMINATIONS OF NON-RESPONSIVENESS OR NON-RESPONSIBILITY AND RIGHT TO PROTEST SOLICITATIONS AND AWARD	7
SECTION 23.	AFFIRMATIVE ACTION AND EQUAL EMPLOYMENT OPPORTUNITY	7
SECTION 24.	VENDEX QUESTIONNAIRES	7
SECTION 25.	COMPLAINTS ABOUT THE BID PROCESS	8
SECTION 26.	BID, PERFORMANCE AND PAYMENT SECURITY	8
SECTION 27.	FAILURE TO EXECUTE CONTRACT	9
SECTION 28.	BIDDER RESPONSIBILITIES AND QUALIFICATIONS	9
SECTION 29.	EMPLOYMENT REPORT	10
SECTION 30.	LABOR LAW REQUIREMENTS	10
SECTION 31.	INSURANCE	10
SECTION 32.	LUMP SUM CONTRACTS	11
SECTION 33.	UNIT PRICE CONTRACTS	11
SECTION 34.	EXCISE TAX	11
SECTION 35.	LICENSES AND PERMITS	11
SECTION 36.	MULTIPLE PRIME CONTRACTORS	11
SECTION 37.	LOCALLY BASED ENTERPRISE REQUIREMENTS (LBE)	12
SECTION 38.	BID SUBMISSION REQUIREMENTS	13
SECTION 39.	COMPTROLLER'SCERTIFICATE	14
SECTION 40.	PROCUREMENT POLICY BOARD RULES	14
SECTION 41.	DDC SAFETY REQUIREMENTS	14

(NO TEXT ON THIS PAGE)

INFORMATION FOR BIDDERS

1. Description and Location of Work

The description and location of the work for which bids are requested are specified in Attachment 1, "Bid Information". Attachment 1 is included as page A-l of the Bid Booklet.

2. Time and Place for Receipt of Bids

Sealed bids shall be received on or before the date and hour specified in Attachment 1, at which time they will be publicly opened and read aloud in the presence of the Commissioner or his or her representative, and any bidders who may desire to be present.

3. Definitions

The definitions set forth in the Procurement Policy Board Rules shall apply to this Invitation For Bids.

4. Invitation For Bids and Contract Documents

(A) Except for titles, sub-titles, headings, running headlines, tables of contents and indices (all of which are printed herein merely for convenience) the following, except for such portions thereof as may be specifically excluded, shall be deemed to be part of the Contract and the Invitation for Bids.

(1) All provisions required by law to be inserted in this Contract, whether actually inserted or not
(2) The Contract Drawings and Specifications
(3) The General Conditions, the General Requirements and the Special Conditions, if any
(4) The Contract
(5) The Information for Bidders; Request for Proposals; Notice of Solicitation and Proposal For Bids; Bid or Proposal, and, if used, the Bid Booklet
(6) The Budget Director's Certificate; all Addenda issued prior to the receipt of the bids; the Notice of Award; Performance and Payment Bonds, if required; and the Notice to Proceed with the Work.

(B) For particulars as to this procurement, including quantity and quality of the purchase, extent of the work or labor to be performed, delivery and performance schedule, and any other special instructions, prospective bidders are referred to the Invitation For Bids Documents. A copy of such documents can be obtained at the location set forth in Attachment 1.

(C) Deposit for Copy of Invitation For Bids Documents: Prospective bidders may obtain a copy of the Invitation For Bids Documents by complying with the conditions set forth in the Notice of Solicitation. The deposit must be in the form of a check or money order made payable to the City of New York, and drawn upon a state or national bank or trust company, or a check of such bank or trust company signed by a duly authorized officer thereof.

(D) Return of Invitation For Bids Documents: All Invitation For Bids Documents must be returned to the Department upon request. If the bidder elects not to submit a bid thereunder, the

Invitation For Bids Documents shall be returned to the Department, along with a statement that no bid will be submitted.

(E) Return of Deposit: Such deposit will be returned within 30 days after the award of the contract or the rejection of all bids as set forth in the advertisement, provided the Invitation For Bids Documents are returned to the location specified in Attachment 1, in physical condition satisfactory to the Commissioner.

(F) Additional Copies: Additional copies of the Invitation For Bids Documents may be obtained, subject to the conditions set forth in the advertisement for bids.

5. Pre-Bid Conference

A pre-bid conference shall be held as set forth in Attachment 1. Nothing stated at the pre-bid conference shall change the terms or conditions of the Invitation For Bids Documents, unless a change is made by written amendment as provided in Section 9 below. Failure to attend a mandatory pre-bid conference shall constitute grounds for the rejection of the bid.

6. Agency Contact

Any questions or correspondence relating to this bid solicitation shall be addressed to the Agency Contact person specified in Attachment 1.

7. Bidder's Oath

(A) The bid-shall be properly signed by an authorized representative of the bidder and the bid shall be verified by the written oath of the authorized representative who signed the bid, that the several matters stated and information furnished therein are in all aspects true.

(B) A materially false statement willfully or fraudulently made in connection with the bid or any of the forms completed and submitted with the bid may result in the termination of any Contract between the City and the Bidder. As a result, the Bidder may be barred from participating in future City contracts as well as be subject to possible criminal prosecution.

8. Examination and Viewing of Site

(A) Pre-Bidding (Investigation) Viewing of Site -Bidders must carefully view and examine the site of the proposed work, as well as its adjacent area, and seek other usual sources of information, for they will be conclusively presumed to have full knowledge of any and all conditions on, about or above the site relating to or affecting in any way the performance of the work to be done under the Contract which were or should have been indicated to a reasonably prudent bidder. To arrange a date for visiting the work site, bidders are to contact the Agency Contact person specified in Attachment 1.

(B) Should the contractor encounter during the progress of the work subsurface conditions at the site materially differing from any shown on the Contract Drawings or indicated in the Specifications or such subsurface conditions as could not reasonably have been anticipated by the contractor and were not anticipated by the City, which conditions will materially affect the cost of the work to be done under the

Contract, the attention of the Commissioner must be called immediately to such conditions before they are disturbed. The Commissioner shall thereupon promptly investigate the conditions. If he finds that they do so materially differ, or that they could not have been reasonably anticipated by the contractor and were not anticipated by the City, the Contract may be modified with his written approval.

9. Examination of Proposed Contract

(A) Request for Interpretation or Correction: Prospective bidders must examine the Contract Documents carefully and before bidding must request the Commissioner in writing for an interpretation or correction of every patent ambiguity, inconsistency or error therein which should have been discovered by a reasonably prudent bidder. Such interpretation or correction, as well as any additional contract provisions the Commissioner may decide to include, will be issued in writing by the Commissioner as an addendum to the Contract, which will be transmitted to each person recorded as having received a copy of the Contract Documents from the Department. Transmission of such addendum will be by mail, e-mail, facsimile or hand delivery. Such addendum will also be posted at the place where the Contract Documents are available for the inspection of prospective bidders. Upon transmission as provided for herein, such addendum shall become a part of the Contract Documents, and binding on all bidders, whether or not actual notice of such addendum is shown.

(B) Only Commissioner's Interpretation or Correction Binding: Only the written interpretation or correction so given by the Commissioner shall be binding, and prospective bidders are warned that no other officer, agent or employee of the City is authorized to give information concerning, or to explain or interpret, the Contract.

(C) Documents given to a subcontractor for the purpose of soliciting the subcontractor's bid shall include either a copy of the bid cover sheet or a separate information sheet setting forth the project name, the Contract number (if available), the contracting agency and the Project's location.

10. Form of Bid

Each bid must be submitted upon the prescribed form and must contain: a) the name, residence and place of business of the person or persons making the same; b) the names of all persons interested therein, and if no other person is so interested, such fact must be distinctly stated; c) a statement to the effect that it is made without any connection with any other person making a bid for the same purpose and that it is in all respects fair and without collusion or fraud; d) a statement that no Council member or other officer or employee or person whose salary is payable in whole or part from the City Treasury is directly or indirectly interested therein or in the supplies, materials or equipment and work or labor to which it relates, or in any portion of the profits thereof; e) a statement that the bidder is not in arrears to the City or to any agency upon a debt or contract or taxes, and is not a defaulter as surety or otherwise upon any obligation to the City to any agency thereof, except as set forth in the bid.

THE BID SHALL BE TYPEWRITTEN OR WRITTEN LEGIBLY IN INK. THE BID SHALL BE SIGNED IN INK. ERASURES OR ALTERATIONS SHALL BE INITIALED BY THE SIGNER IN INK. FAILURE TO CONFORM TO THE REQUIREMENTS OF THIS SECTION 10 SHALL RESULT IN THE REJECTION OF THE BID.

11. Irrevocability of Bid

The prices set forth in the bid cannot be revoked and shall be effective until the award of the Contract, unless the bid is withdrawn as provided for in Sections 15 and 18 below.

12. Acknowledgment of Amendments

The receipt of any amendment to the Contract Documents shall be acknowledged by the bidder in its bid submission.

13. Bid Samples and Descriptive Literature

Bid samples and descriptive literature shall not be submitted by the bidder, unless expressly requested elsewhere in the Contract or Contract Documents. Any unsolicited bid samples or descriptive literature which are submitted shall not be examined or tested and shall not be deemed to vary any of the provisions of this Contract.

14. Proprietary Information/Trade Secrets

(A) The bidder shall identify those portions of the bid which it deems to be confidential, proprietary information or trade secrets, and provide justification why such materials shall not be disclosed by the City. All such materials shall be clearly indicated by stamping the pages on which such information appears, at the top and bottom thereof with the word "Confidential". Such materials stamped "Confidential" must be easily separable from the non-confidential sections of the bid.

(B) All such materials so indicated shall be reviewed by the Agency and any decision not to honor a request for confidentiality shall be communicated in writing to the bidder. For those bids which are unsuccessful, all such confidential materials shall be returned to the bidder. Prices, makes and model or catalog numbers of the items offered, deliveries, and terms of payment shall be publicly available after bid opening, regardless of any designation of confidentiality made by the bidder.

15. Pre-Opening Modification or Withdrawal of Bids

Bids may be modified or withdrawn by written notice received in the office designated in Attachment 1, before the time and date set for the bid opening. If a bid is withdrawn in accordance with this Section, the bid security, if any, shall be returned to the bidder.

16. Bid Evaluation and Award

In accordance with the New York City Charter, the Procurement Policy Board Rules and the terms and conditions of this Invitation For Bids, this Contract shall be awarded, if at all, to the responsible bidder whose bid meets the requirements and evaluation criteria set forth in the Invitation For Bids, and whose bid price is either the most favorable bid price or, if the Invitation For Bids so states, the most favorable evaluated bid price. A bid may not be evaluated for any requirement or criterion that is not disclosed in the Invitation For Bids.

Restriction: No negotiations with any bidder shall be allowed to take place except under the circumstances and in the manner set forth in Section 21. Nothing in this Section shall be deemed to permit a contract award to a bidder submitting a higher quality item than that designated in the Invitation For Bids, if that bid is not also the most favorable bid.

17. Late Bids, Late Withdrawals and Late Modifications

Any bid received at the place designated in the solicitation after the time and date set for receipt of bids is late and shall not be considered. Any request for withdrawal or modification received at the place designated in the solicitation after the time and date set for receipt of bids is late and shall not be considered. The exception to this provision is that a late modification of a successful bid that makes the bid terms more favorable to the City shall be considered at any time it is received.

18. Withdrawal of Bids.

Except as provided for in Section 15, above, a bidder may not withdraw its bid before the expiration of forty-five (45) days after the date of the opening of bids; thereafter, a bidder may withdraw its bid only in writing and in advance of an actual award. If within sixty (60) days after the execution of the Contract, the Commissioner fails to fix the date for commencement of work by written notice to the bidder, the bidder, at his option, may ask to be relieved of his obligation to perform the work called for by written notice to the Commissioner. If such notice is given to the Commissioner, and the request to withdraw is granted, the bidder waives all claims in connection with this Contract.

19. Mistake in Bids

(A) Mistake Discovered Before Bid Opening: A bidder may correct mistakes discovered before the time and date set for bid opening by withdrawing or correcting the bid as provided in Section 15 above.

(B) Mistakes Discovered Before Award

(1) In accordance with General Municipal Law (Section 103, subdivision 11), where a unilateral error or mistake is discovered in a bid, such bid may be withdrawn upon written approval of the Agency Chief Contracting Officer if the following conditions are met:

(a) The mistake is known or made known to the agency prior to the awarding of the Contract or within 3 days after the opening of the bid, whichever period is shorter; and
(b) The price bid was based upon an error of such magnitude that enforcement would be unconscionable; and
(c) The bid was submitted in good faith and the bidder submits credible evidence that the mistake was a clerical error as opposed to a judgment error; and
(d) The error in the bid is actually due to an unintentional and substantial arithmetic error or an unintentional omission of a substantial quantity of work, labor, material or services made directly in the compilation of the bid, which unintentional arithmetic error or unintentional omission can be clearly shown by objective evidence drawn from inspection of the original work paper, documents, or materials used in the preparation of the bid sought to be withdrawn; and
(e) It is possible to place the agency in the same position as existed prior to the bid.

(2) Unless otherwise required by law, the sole remedy for a bid mistake in accordance with this Article shall be withdrawal of the bid, and the return of the bid bond, or other security, if any, to the bidder. Thereafter, the agency may, in its discretion, award the Contract to the next lowest bidder or rebid the Contract. Any amendment to or reformation of a bid or a Contract to rectify such an error or mistake

therein is strictly prohibited.

(3) If the mistake and the intended correct bid are clearly evident on the face of the bid document, the bid shall be corrected to the intended correct bid and may not be withdrawn. Examples of mistakes that may be corrected are typographical errors, errors in extending unit prices, transposition errors and arithmetical errors.

20. Low Tie Bids

(A) When two or more low responsive bids from responsible bidders are identical in price, meeting all the requirements and criteria set forth in the Invitation For Bids, the Agency Chief Contracting Officer will break the tie in the following manner and order of priority:

(1) Award to a certified New York City small, minority or woman-owned business entity bidder;
(2) Award to a New York City bidder;
(3) Award to a certified New York State small, minority or woman-owned business bidder;
(4) Award to a New York State bidder.

(B) If two or more bidders still remain equally eligible after application of paragraph (A) above, award shall be made by a drawing by lot limited to those bidders. The bidders involved shall be invited to attend the drawing. A witness shall be present to verify the drawing and shall certify the results on the bid tabulation sheet.

21. Rejection of Bids

(A) Rejection of Individual Bids: The Agency may reject a bid if:

(1) The bidder fails to furnish any of the information required pursuant to Section 24 or 28 hereof; or if
(2) The bidder is determined to be not responsible pursuant to the Procurement Policy Board Rules; or if
(3) The bid is determined to be non-responsive pursuant to the Procurement Policy Board Rules; or if
(4) The bid, in the opinion of the Agency Chief Contracting Officer, contains unbalanced bid prices and is thus non-responsive, unless the bidder can show that the prices are not unbalanced for the probable required quantity of items, or if the imbalance is corrected pursuant to Section 15.

(B) Rejection of All Bids: The Agency, upon written approval by the Agency Chief Contracting Officer, may reject all bids and may elect to resolicit bids if in its sole opinion it shall deem it in the best interest of the City so to do.

(C) Rejection of All Bids and Negotiation With All Responsible Bidders: The Agency Head may determine that it is appropriate to cancel the Invitation For Bids after bid opening and before award and to complete the acquisition by negotiation. This determination shall be based on one of the following reasons:

(1) All otherwise acceptable bids received are at unreasonable prices, or only one bid is received and the Agency Chief Contracting Officer cannot determine the reasonableness of the bid price, or no responsive bid has been received from a responsible bidder; or

(2) In the judgment of the Agency Chief Contracting Officer, the bids were not independently arrived at in open competition, were collusive, or were submitted in bad faith.

(D) When the Agency has determined that the Invitation for Bids is to be canceled and that use of negotiation is appropriate to complete the acquisition, the contracting officer may negotiate and award the Contract without issuing a new solicitation, subject to the following conditions:

(1) prior notice of the intention to negotiate and a reasonable opportunity to negotiate have been given by the contracting officer to each responsible bidder that submitted a bid in response to the Invitation for Bids;

(2) the negotiated price is the lowest negotiated price offered by a responsible bidder; and

(3) the negotiated price is lower than the lowest rejected bid price of a responsible bidder that submitted a bid in response to the Invitation for Bids.

22. Right to Appeal Determinations of Non-Responsiveness or Non-Responsibility and Right to Protest Solicitations and Award

The bidder has the right to appeal a determination of non-responsiveness or non-responsibility and has the right to protest a solicitation and award. For further information concerning these rights, the bidder is directed to the Procurement Policy Board Rules.

23. Affirmative Action and Equal Employment Opportunity

This Invitation For Bids is subject to applicable provisions of Federal, State and Local Laws and executive orders requiring affirmative action and equal employment opportunity.

24. VENDEX Questionnaires

(A) Requirement: Pursuant to Administrative Code Section 6-116.2 and the PPB Rules, bidders may be obligated to complete and submit VENDEX Questionnaires. Generally, if this bid is $100,000 or more, or if this bid when added to the sum total of all contracts, concessions and franchises the bidder has received from the City and any subcontracts received from City contractors over the past twelve months, equals or exceeds $100,000, Vendex Questionnaires must be completed. If required, Vendex Questionnaires must be completed and submitted before any award of contract may be made or before approval is given for a proposed subcontractor. Non-compliance with these submission requirements may result in the disqualification of the bid, disapproval of a subcontractor, subsequent withdrawal of approval for the use of an approved subcontractor, or the cancellation of the contract after its award.

(B) Submission: Vendex Questionnaires must be submitted directly to the Mayor's Office of Contract Services, ATTN: Vendex, 253 Broadway, 9th Floor, New York, New York 10007. In addition, the bidder must submit a Confirmation of Vendex Compliance to the agency. A form for this confirmation is set forth in the Bid Booklet.

(C) Obtaining Forms: Vendex Questionnaires, as well as detailed instructions, may be obtained at www.nyc.gov/vendex. The bidder may also obtain Vendex forms and instructions by contacting the

Agency Chief Contracting Office or the contract person for this contract.

25. Complaints About the Bid Process

The New York City Comptroller is charged with the audit of contracts in New York City. Any vendor who believes that there has been unfairness, favoritism or impropriety in the bid process should inform the Comptroller, Office of Contract Administration, One Centre Street, Room 835, New York, New York; telephone number (212)669-2797.

26. Bid, Performance and Payment Security

(A) Bid Security: Each bid must be accompanied by bid security in an amount and type specified in Attachment 1 (page A-1 of the Bid Booklet). The bid security shall assure the City of New York of the adherence of the bidder to its proposal, the execution of the Contract, and the furnishing of Performance and Payment Bonds by the bidder, if required in Attachment 1. Bid security shall be returned to the bidder as follows:

(1) Within ten (10) days after the bid opening, the Comptroller will be notified to return the deposits of all but the three (3) lowest bidders. Within five (5) days after the award, the Comptroller will be notified to return the deposits of the remaining two unsuccessful bidders.
(2) Within five (5) days after the execution of the Contract and acceptance of the Contractor's bonds, the Comptroller will be notified to return the bid security of the successful bidder or, if performance and payment bonds are not required, only after the sum retained under Article 21 of the Contract equals the amount of the bid security.
(3) Where all bids are rejected, the Comptroller will be notified to return the deposit of the three (3) lowest bidders at the time of rejection.

(B) Performance and Payment Security: Performance and Payment Security must be provided in an amount and type specified in Attachment 1 (page A-1 of the Bid Booklet). The performance and payment security shall be delivered by the contractor prior to or at the time of execution of the Contract. If a contractor fails to deliver the required performance and payment security, its bid security shall be enforced, and an award of Contract may be made to the next lowest responsible and responsive bidder, or the contract may be rebid.

(C) Acceptable Types of Security: Acceptable types of security for bids, performance, and payment shall be limited to the following:

(1) a one-time bond in a form satisfactory to the City;
(2) a bank certified check or money order;
(3) obligations of the City of New York; or
(4) other financial instruments as determined by the Office of Construction in consultation with the Comptroller.

Whenever the successful bidder deposits obligations of the City of New York as performance and payment security, the Comptroller may sell and use the proceeds thereof for any purpose for which the principal or surety on such bond would be liable under the terms of the Contract. If the money is deposited with the Comptroller, the successful bidder shall not be entitled to receive interest on such money from the City.

(D) Form of Bonds: Security provided in the form of bonds must be prepared on the form of bonds authorized by the City of New York. Forms for bid, performance, and payment bonds are included in the Invitation for Bids Documents. Such bonds must have as surety thereunder such surety company or companies as are: (I) approved by the City of New York; (2) authorized to do business in the State of New York, and (3) approved by the Department of the Treasury of the United States. Premiums for any required bonds must be included in the base bid.

The bidder is advised that submission of a bid bond where the surety on such bond fails to meet the criteria set forth herein, shall result in the rejection of the bid as non-responsive.

The Department of the Treasury of the United States advises that information concerning approved surety companies may be obtained as follows: (1) from the Government Printing Office at 202-512-1800; (2) through the Internet at http://www.fms.treas.gov/c570/index.html, and (3) through a computerized public bulletin board, which can be accessed by using your computer modem and dialing 202-874-6887.

(E) Power of Attorney: Attorneys in fact who sign bid, performance, or payment bonds must file with each bond a certified copy of their power of attorney to sign said bonds.

27. Failure to Execute Contract

In the event of failure of the successful bidder to execute the Contract and furnish the required security within ten (10) days after notice of the award of the Contract, the deposit of the successful bidder or so much thereof as shall be applicable to the amount of the award made shall be retained by the City, and the successful bidder shall be liable for and hereby agrees to pay on demand the difference between the price bid and the price for which such Contract shall be subsequently awarded, including the cost of any required reletting and less the amount of such deposit. No plea of mistake in such accepted bid shall be available to the bidder for the recovery of the deposit or as a defense to any action based upon such accepted bid. Further, should the bidder's failure to comply with this Section cause any funding agency, body or group (Federal, State, City, Public, Private, etc.) to terminate, cancel or reduce the funding on this project, the bidder in such event shall be liable also to the City for the amount of actual funding withdrawn by such agency on this project, less the amount of the forfeited deposit.

28. Bidder Responsibilities and Qualifications

(A) Bidders must include with their bids all information necessary for a determination of bidder responsibility, as set forth in the Specifications.

(B) The Agency may require any bidder or prospective bidder to furnish all books of account, records, vouchers, statements or other information concerning the bidder's financial status for examination as may be required by the Agency to ascertain the bidder's responsibility and capability to perform the Contract. If required, a bidder must also submit a sworn statement setting forth such information as the Agency may require concerning present and proposed plant and equipment, the personnel and qualifications of his working organizations, prior experience and performance record.

(C) Oral Examination on Qualifications: In addition thereto, and when directed by the Agency, the bidder, or a responsible officer, agent or employee of the bidder, must submit to an oral examination to be conducted by the Agency in relation to his proposed tentative plan and schedule of

operations, and such other matters as the Agency may deem necessary in order to determine the bidder's ability and responsibility to perform the work in accordance with the Contract. Each person so examined must sign and verify a stenographic transcript of such examination noting thereon such corrections as such person may desire to make.

(D) If the bidder fails or refuses to supply any of the documents or information set forth in paragraph (B) hereof or fails to comply with any of the requirements thereof, the Agency may reject the bid.

29. Employment Report

In accordance with Executive Order No. 50 (1980) as modified by Executive Order 108 (1986), the filing of a completed Employment Report (ER) is a requirement of doing business with the City of New York for construction contractors with contracts of $1,000,000 or more and subcontractors with construction subcontracts of $750,000 or more. The required forms and information are included in the Bid Booklet.

30. Labor Law Requirements

(A) General: The successful bidder will be required to comply strictly with all Federal, State and local labor laws and regulations.

(B) New York State Labor Law: This Contract is subject to New York State Labor Law Section 220, which requires that construction workers on the site be paid prevailing wages and supplements. The Contractor is reminded that all wage provisions of this Contract will be enforced strictly and failure to comply will be considered when evaluating performance. Noncompliance may result in the contractor being debarred by the City from future contracts. Complaints filed with the Comptroller may result in decisions which may debar a contractor from bidding contracts with any state governmental entity and other political subdivisions.

(C) Records: The Contractor is expected to submit accurate payroll reports and other required documents and verify attendance and job classifications being utilized in compliance with the law, Contract provisions and agency procedures.

31. Insurance

(A) Bidders are advised that the insurance requirements contained herein are regarded as material terms of the Contract. As required by Article 22 of the Contract, the contractor must effect and maintain with companies licensed and authorized to do business in the State of New York, the types of insurance set forth therein, when required by and in the amounts set forth in Schedule A of the General Conditions. Such required insurance must be provided from the date the contractor is ordered to commence work and up to the date of final acceptance of all required work.

(B) The contractor must, within ten days of receipt of the notice of award, submit the following insurance documentation: (a) original certificate of insurance for general liability in the amount required by Schedule A of the General Conditions, and (b) original certificates of insurance or other proof of coverage for workers' compensation and disability benefits, as required by Section 57 of the New York State Workers' Compensation Law and Section 220 of the Disability Benefits Law.

32. Lump Sum Contracts

(A) Comparison of Bids: Bids on Lump Sum Contracts will be compared on the basis of the lump sum price bid, adjusted for alternate prices bid, if any.

(B) Lump Sum Bids for "General Construction Work" which include excavation shall include all necessary excavation work defined in the Specifications as being included in the lump sum bid. The bidder shall also bid a unit price for the additional cost of excavating material which is defined in the Specifications as excavation for which additional payment will be made. The total estimated additional cost of removing such material will be taken as the quantity set forth in the Engineer's Estimate multiplied by the unit price bid. This total estimated cost of additional excavation shall be added to the lump sum bid for the General Construction Work for the purpose of comparing bids to determine the low bidder.

(C) Variations from Engineer's Estimate: The Engineer's Estimate of the quantity of excavation for which additional payment will be made is approximate only and is given solely to be used as a uniform basis for the comparison of bids and such estimate is not to be considered as part of this contract. The quantities actually required to complete the contract work may be more or less than the quantities in the Engineer's Estimate and, if so, no action for damages or for loss of profits shall accrue to the contractor by reason thereof.

33. Unit Price Contracts

(A) Comparison of Bids: Bids on Unit Price Contracts will be compared on the basis of a total estimated price, arrived at by taking the sum of the estimated quantities of such items, in accordance with the Engineer's Estimate of Quantities set forth in the Bid Schedule, multiplied by the corresponding unit prices, and including any lump sum bids on individual items.

(B) Variations from Engineer's Estimate: Bidders are warned that the Engineer's Estimate of Quantities on the various items of work and materials is approximate only, given solely to be used as a uniform basis for the comparison of bids, and is not be considered part of this contract. The quantities actually required to complete the contract work may be less or more than so estimated, and if so, no action for damages or for loss of profits shall accrue to the contractor by reason thereof.

(C) Overruns: The terms and conditions applicable to overruns of unit price items are set forth in Article 26 of the Contract.

34. Excise Tax

Bidders are referred to the Specifications for information on Federal Excise Tax exemptions.

35. Licenses and Permits

The successful bidder will be required to obtain all necessary licenses and permits necessary to perform the work.

36. Multiple Prime Contractors

If more than one prime contractor will be involved on this project, all contractors are required to examine the Invitation for Bid packages for all other parts of the project.

37. Locally Based Enterprise Requirements (LBE)

This Contract is subject to the requirements of Administrative Code, Section 6-108.1, and the regulations promulgated thereunder. No construction contract will be awarded unless and until these requirements have been complied with in their entirety. The bidder is advised of the provisions set forth below, as well as the provisions with respect to the Locally Based Enterprise Program contained in Article 67 of the Contract. The contractor is advised that:

(A) If any portion of the Contract is subcontracted, not less than ten percent of the total dollar amount of the contract shall be awarded to locally based enterprises ("LBEs"); except, where less than ten percent of the total dollar amount of the Contract is subcontracted, such lesser percentage shall be so awarded.

(B) No contractor shall require performance and payment bonds from LBE subcontractors.

(C) No Contract shall be awarded unless the contractor first identifies in its bid:

(1) the percentage, dollar amount and type of work to be subcontracted; and
(2) the percentage, dollar amount and type of work to be subcontracted to LBEs.

(D) Within ten calendar days after notification of low bid, the apparent low bidder shall submit an "LBE Participation Schedule" to the contracting agency. If such schedule does not identify sufficient LBE subcontractors to meet the requirements of Administrative Code Section 6-108.1, the apparent low bidder shall submit documentation of its good faith efforts to meet such requirements.

(1) The "LBE Participation Schedule" shall include:

(a) the name and address of each LBE that will be given a subcontract,
(b) the percentage, dollar amount and type of work to be subcontracted to the LBE, and
(c) the dates when the LBE subcontract work will commence and end.

(2) The following documents shall be attached to the "LBE Participation Schedule":

(a) verification letters from each subcontractor listed in the "LBE Participation Schedule" stating that the LBE will enter into a formal agreement for work,
(b) certification documents of any proposed LBE subcontractor which is not on the LBE certified list, and
(c) copies of the certification letter of any proposed subcontractor which is an LBE.

(3) Documentation of good faith efforts to achieve the required LBE percentage shall include as appropriate but not limited to the following:

(a) attendance at prebid meetings, when scheduled by the agency, to advise bidders of contract requirements;

(b) advertisement where appropriate in general circulation media, trade association publications and small business media of the specific subcontracts that would be at least equal to the percentage goal for LBE utilization specified by the contractor;

(c) written notification to association of small, minority and women contractors soliciting specific subcontractors;

(d) written notification by certified mail to LBE firms that their interest in the contract is solicited for specific work items and their estimated values;

(e) demonstration of efforts made to select portions of the work for performance by LBE firms in order to increase the likelihood of achieving the stated goal;

(f) documented efforts to negotiate with LBE firms for specific subcontracts, including at a minimum:

(i) The names, address and telephone numbers of LBE firms that are contacted;

(ii) A description of the information provided to LBE firms regarding the plans and specifications for portions of the work to be performed;

(iii) Documentation showing that no reasonable price can be obtained from LBE firms;

(iv) A statement of why agreements with LBE firms were not reached;

(g) a statement of the reason for rejecting any LBE firm which the contractor deemed to be unqualified; and

(h) documentation of efforts made to assist the LBE firms contacted that needed assistance in obtaining required insurance.

(E) Unless otherwise waived by the Commissioner with the approval of the Office of Economic and Financial Opportunity, failure of a proposed contractor to provide the information required by paragraphs (C) and (D) above may render the bid non-responsive and the Contract may not be awarded to the bidder. If the contractor states that it will subcontract a specific portion of the work, but can demonstrate despite good faith efforts it cannot achieve its required LBE percentage for subcontracted work until after award of Contract, the Contract may be awarded, subject to a letter of compliance from the contractor stating that it will comply with Administrative Code Section 6-108.1 and subject to approval by the Commissioner. If the contractor has not met its required LBE percentage prior to award, the contractor shall demonstrate that a good faith effort has been made subsequent to award to obtain LBEs on each subcontract until its meets the required percentage.

(F) When a bidder indicates prior to award that no work will be subcontracted, no work may be subcontracted without the prior written approval of the Commissioner, which shall be granted only if the contractor in good faith seeks LBE subcontractors at least six weeks prior to the start of work.

(G) The contractor may not substitute or change any LBE which was identified prior to award of the contract without the written permission of the Commissioner. The contractor shall make a written application to the Commissioner for permission to make such substitution or change, explaining why the contractor needs to change its LBE subcontractor and how the contractor will meet its LBE subcontracting requirement. Copies of such application must be served on the originally identified LBE by certified mail return receipt requested, as well as the proposed substitute LBE. The Commissioner shall determine whether or not to grant the contractor's request for substitution.

38. <u>Bid Submission Requirements</u>

The following forms, all of which are contained in the Bid Booklet, are to be completed and submitted with the bid:

(1) Bid Schedule and Bid Form, including Affirmation
(2) Bid Security (if required, see Attachment 1 on Page A-1)
(3) M/WBE Subcontactor Utilization Plan (if participation goals have been established)

FAILURE TO SUBMIT ITEMS (1), (2) AND (3)
WILL RESULT IN THE DISQUALIFICATION OF THE BID.

(4) Safety Questionnaire
(5) Construction Employment Report (if bid is $1,000,000 or more)
(6) Contract Certificate (if bid is less than $1,000,000)
(7) Confirmation of Vendex Compliance
(8) Special Experience Requirements (if applicable to this contract)
(9) Apprenticeship Program Questionnaire (if applicable)

FAILURE TO SUBMIT ITEMS (4) THROUGH (9)
MAY RESULT IN THE DISQUALIFICATION OF THE BID.

39. Comptroller's Certificate

This Contract shall not be binding or of any force unless it is registered by the Comptroller in accordance with Section 328 of the City Charter and the Procurement Policy Board Rules. This Contract shall continue in force only after annual appropriation of funds by the City of New York and certification as hereinabove set forth.

40. Procurement Policy Board Rules

This Invitation For Bids is subject to the Rules of the Procurement Policy Board of the City of New York. In the event of a conflict between said Rules and a provision of this Invitation For Bids, the Rules shall take precedence.

41. DDC Safety Requirements

The DDC Safety Requirements apply to the work to be performed pursuant to the Contract. The DDC Safety Requirements are set forth on the following pages.

CITY OF NEW YORK

DEPARTMENT OF DESIGN AND CONSTRUCTION

SAFETY REQUIREMENTS

June 2015

THE DDC SAFETY REQUIREMENTS INCLUDE THE FOLLOWING SECTIONS:

I. POLICY ON SITE SAFETY

II. PURPOSE

III. DEFINITIONS

IV. RESPONSIBILITIES

V. SAFETY QUESTIONNAIRE

VI. SAFETY PROGRAM AND SITE SAFETY PLAN

VII. KICK-OFF/PRE-CONSTRUCTION MEETINGS AND SAFETY REVIEW

VIII. EVALUATION DURING WORK IN PROGRESS

IX. SAFETY PERFORMANCE EVALUATION

I. POLICY ON SITE SAFETY

The City of New York Department of Design and Construction (DDC) is committed to a policy of injury and illness prevention and risk management for construction work that will ensure the safety and health of the workers engaged in the projects and the protection of the general public. Therefore, it is DDC's policy that work carried out by Contractors on DDC jobsites must, at a minimum, comply with applicable federal, state and city laws, rules and regulations, including without limitation:

- U. S. Department of Labor 29 Code of Federal Regulations (CFR) Part 1926 and applicable Sub-parts of Part 1910 – U.S. Occupational Safety and Health Administration (OSHA); New York State Department of Labor Industrial Code Rule 23 – Protection in Construction, Demolition and Excavation;
- New York City Construction Codes, Title 28
- NYC Department of Transportation Title 34 Chapter 2 – Highway Rules
- New York State Department of Labor Industrial Code Rule 16 NYCRR Part 753
- Title 15 of the Rules of the City of New York, Chapter 13 Citywide Construction Dust Mitigation
- Manual on Uniform Traffic Control Devices (MUTCD)
- Title 15 of the Rules of the City of New York, Chapter 28 Citywide Construction Noise Mitigation

II. PURPOSE

The purpose of this policy is to ensure that Contractors perform their work and supervise their employees in accordance with all applicable federal, state and city rules and regulations. Further, Contractors will be expected to minimize or eliminate jobsite and public hazards, through a planning, inspection, auditing and corrective action process. The goal is to control risks so that injuries, illnesses and accidents to contractors' employees, DDC employees and the general public, as well as damage to city-owned and private property, are reduced to the lowest level feasible.

III. DEFINITIONS

Agency Chief Contracting Officer (ACCO): The ACCO shall mean the person delegated authority by the Commissioner to organize and supervise the procurement activity of subordinate Agency staff in conjunction with the CCPO.

Competent Person: As defined by OSHA, an individual who is capable of identifying existing and predictable hazards in the surroundings or working conditions that are unsanitary, hazardous, or dangerous to employees or the general public, and who has authorization to take prompt corrective measures to eliminate them.

Construction Safety Auditor: A representative of the QA&CS Construction Safety Unit who provides inspection and assessment services to enhance health and safety on all DDC construction projects. The activities of the Construction Safety Auditor include performing site surveys, reviewing health and safety plans, reviewing construction permits, and rendering technical advice and assistance to DDC Resident Engineers and Project Managers.

Construction Safety Unit: A part of QA&CS within the Division of Program Management/ Safety & Site Support that assesses contractor safety on DDC jobsites and advises responsible parties of needed corrective actions.

Construction Superintendent: A representative of the contractor responsible for overseeing performance of the required construction work. This individual must engage in sound construction practices, and is responsible to maintain a safe work site. In the case of a project involving the demolition, alteration or new construction of buildings, the Construction Superintendent must be licensed by the NYC Department of Buildings.

Contractor: For purposes of these Safety Requirements, the term "Contractor" shall mean any person or entity that enters into a contract for the performance of construction work on a DDC project. The term "Contractor" shall include any person or entity which enters into any of the following types of contracts: (1) a prime construction contract for a specific project, (2) a prime construction contract using the Job Order Contracting System ("JOCS Contract"), and (3) a subcontract with a CM/Builder ("First Tier Subcontract").

Daily Safety Job Briefing: Daily jobsite safety meetings, giving to all jobsite personnel by contractor, with the purpose of discussing project specific safety procedures for the scheduled construction work.

Director - Quality Assurance and Construction Safety (QA&CS): Responsible for the operations of the QACS Construction Safety Unit and the DDC Site Safety management programs.

Job Hazard Analysis (JHA): A process of identifying the major job steps and any potential site-specific hazards that may be present during construction and establishing the means and methods to eliminate or control those hazards.

Qualified Person: As defined by OSHA, an individual who, by possession of a recognized degree, certificate, license or professional standing, or who by extensive knowledge, training, and experience, has successfully demonstrated his or her ability to solve problems relating to the subject matter, the work, or the project. Qualified Persons are required under regulation to address issues pertaining, but without limit, to fall protection, scaffold design and trenching and shoring, among others.

Project Site: Those areas indicated in the Contract Documents where the Work is to be performed.

Project Safety Representative: The designated project safety representative shall have completed an authorized 30 hour OSHA Construction Safety Course and other safety training applicable to Contractor's/subcontractor's project work. Except in instances where a dedicated Project Safety Manager is required, a Project Safety Representative may also function as a superintendent, foreman or crew leader on the Project, but must have sufficient experience and authority to undertake corrective actions and must qualify to be a competent person. No work is to be performed on site when a Project Safety Representative is not present.

Project Safety Manager: A dedicated, full-time project safety manager may be a contractual requirement on large projects or projects deemed by DDC to be particularly high risk. This would be in addition or in lieu of a Contractor's Project Safety Representative. This individual shall not have any other assigned duties. This individual shall have received, at a minimum an authorized 30 hour OSHA Construction Safety Course. Other examples of acceptable training are OSHA Safety and Health Standards for the Construction Industry training program (OSHA 510), Certified Safety Professional (CSP), Certified Industrial Hygienist (CIH) or a degree/certificate in a safety and health from a college-level curriculum.
A Project Safety Manager shall possess the additional training, years of experience, and skills necessary to thoroughly understand the health and safety hazards and controls for large construction projects, including the full scope of the specific Work.

QA&CS – Quality Assurance and Construction Safety of the New York City Department of Design and Construction.

Resident Engineer (RE) / Construction Project Manager (CPM): Representative of the Commissioner duly designated by the Commissioner to be his/her representative at the site of the work. (The RE/CPM may be a third-party consultant, including a Construction Management firm, retained by DDC)

Safety Program: Established by the Contractor that covers all operations of that Contractor and establishes the Contractor's overall safety policy, regulatory compliance plan and minimum safety standards. The Safety Program must be submitted prior to the commencement of work at the site and is subject to review and acceptance by the Construction Safety Unit.

Safety Questionnaire: Used by DDC to evaluate Contractor's current and past safety performance. It is required to be completed by all Contractors initially when submitting bids for Construction work, or when being pre-qualified and updated annually or as requested by the DDC.

Site Safety Manager: For certain projects, as defined in NYC Construction Codes – Title 28, the Contractor shall provide a Site Safety Manager with a Site Safety Manager License issued by the NYC Department of Building.

Site Safety Plan: A site-specific safety plan developed by the Contractor for a specific project. The Site Safety Plan must identify hazards associated with the project, and include specific safety procedures and training appropriate and necessary to complete the work. The Site Safety Plan must be submitted prior to the commencement of work at the site and is subject to review and acceptance by the Construction Safety Unit.

Unsafe or Unhealthy Condition: A condition that could be potentially hazardous to the health and safety of personnel or the public, and/or damaging to equipment, machinery, property or the environment.

Weekly Safety Meetings: Weekly documented jobsite safety meetings, given to all jobsite personnel by contractor, with the purpose of discussing general safety topics and job specific requirements encountered at the DDC work site.

Work: The construction required by the Contract Documents whether completed or partially completed, performed by the Contractor/ subcontractors. Work refers to the furnishing of labor, furnishing and incorporating materials and equipment into the construction and providing any service required by the Contract Documents to fulfill the Contractor's obligation to complete the Project.

IV. RESPONSIBILITIES

All persons who manage, perform, and provide support for construction projects shall conduct operations in compliance with the requirements identified in this Policy and all applicable governing regulatory agency requirements and guidelines pertaining to safety in construction.

A. DDC or CM Resident Engineer / Construction Project Manager

- Monitors the issuance of safety- related permits, approvals and drawings and maintains copies on site.
- Monitors construction-related work activities to confirm that they are conducted in accordance with DDC policies and all applicable regulations that pertain to construction safety.
- Maintains documentation and periodically attends weekly safety meetings and daily safety job briefings.
- Notifies the Construction Safety Unit and the ACCO's Insurance and Risk Management Unit of project- related accidents and emergencies, as per DDC's Construction Safety Emergency and Accident Notification and Response Protocol.
- Gathers facts related to all accidents and prepares DDC Construction Accident Report.

- Notifies the Construction Safety Unit within two (2) hours of the start of an inspection by any outside regulatory agency personnel, including OSHA, NYC DOB or others and forwards a copy of the inspection report within three days of its receipt.
- Monitors the conditions at the site for conformance with the contractor's Site Safety Plan and DDC construction documents.
- Notifies the contractor and DDC in the event that any condition or activity exists that is not in compliance with the contractor's Site Safety Plan, applicable federal, state or local codes or any condition that presents a potential risk of injury to the public or workers or possible damage to property.
- Notifies DDC of any unsafe or unhealthy condition and directs the contractor to provide such labor, materials, equipment and supervision to abate such conditions.
- Escort and assist QA&CS Construction Safety Auditors during the field and record inspections.
- Reports emergency conditions to the Construction Safety Unit immediately.

B. Contractors

- Submit a completed Safety Questionnaire and other safety performance related documentation with its bid or as part of a pre-qualification package.
- Complete a written Job Hazard Analysis (JHA) that identifies safety hazards for project specific work tasks and hazard control methods. A written JHA shall be available at the site for reference and included in the Site Safety Plan submitted by the contractor.
- Submit a Site Safety Plan and Safety Program within 30 days from the Award Date or as otherwise directed. The Site Safety Plan and Safety Program are subject to review and acceptance by the Construction Safety Unit prior to the commencement of work at the site. The Site Safety Plan shall be revised and updated as necessary.
- Develop project specific safety procedures to protect general public during all construction activities for the duration of the project.
- Ensure that all employees are aware of the hazards associated with the project through documented formal and informal training and/or other communications. Conduct and document weekly safety meetings and daily job briefing sessions for the duration of the project. Documentation to be provided to the RE/CPM on a monthly basis.
- Name the Project Safety Representative and Project Safety Manager, if required. The Contractor will be required to identify the Project Safety Representative and Project Safety Manager in the Site Safety Plan. Resumes, outlining the qualification and experience for the Project Safety Representative and Project Safety Manager, shall be available upon request. DDC reserves the right to request that the Contractor replace any Project Safety Representative or Project Safety Manager for any reason at any time during the project.
- Name a Competent Person(s), The Contractor will be required to identify a Competent Person(s) in the Site Safety Plan.
- Comply with all mandated federal, state and local safety and health rules and regulations.
- Comply with all provisions of the Site Safety Plan.
- Conduct applicable safety training prior to the commencement of work at the site. All training records (OSHA 10-hour, flagger, scaffold, fall protection, confined space entry, etc.) shall be provided to the RE/CPM prior to mobilization, included in the Site Safety Plan, kept current during the course of the project, and available for review. Prior to performing any work on DDC project all employees shall have successfully completed, within the previous five calendar years, a 10 Hour OSHA construction safety course.
- As part of the Site Safety Plan, prepare a site specific programs and plans, such as MPT plan, steel erection plan, confined space program, fall protection plan, demolition plan, etc. (if not otherwise provided in the contract documents) and comply with all of its provisions.
- Conduct and document site-specific safety orientation for Contractor personnel to review the hazards associated with the project as identified in the Site Safety Plan and the specific safety procedures and

controls that will be used to protect workers, the general public and property. The Project Safety Representative and/or Project Safety Manager will conduct this training prior to mobilization and provide documentation to the RE/CPM.

- Provide, replace and adequately maintain at or around the project site, suitable and sufficient signage, lights, barricades and enclosures (fences, sidewalk sheds, netting, bracing, etc.).
- Report unsafe or unhealthy conditions to the RE/CPM as soon as practical, but no more than 24 hours after discovery, and take prompt actions to remove or abate such conditions.
- Report any accidents involving injuries to workers or the general public, as well as property damage, to the RE/CPM within one (1) hour.
- Following an accident, the Contractor shall not remove or alter any equipment, structure, material, or evidence related to the accident. Exception: Immediate emergency procedures taken to secure structures, temporary construction, operations, or equipment that pose a continued imminent danger or facilitate assistance for persons who are trapped or who have sustained bodily injury.
- Notify the RE/CPM within one (1) hour of the start of an inspection by any outside regulatory agency personnel, including OSHA, NYC DOB or others.
- Maintain all records pertaining to all required compliance documents and accident and injury reports.
- Address DDC recommendations on safety, which shall in no way relieve the Contractor of its responsibilities for safety on the project. The Contractor has sole responsibility for safety.

V. SAFETY QUESTIONNAIRE

DDC requires that all Contractors provide information regarding their current and past safety performance and programs. This will be accomplished by the use of the DDC Safety Questionnaire. As a part of the bid submittal package, the contractor must submit a completed DDC Safety Questionnaire listing company workers' compensation experience modification rating and OSHA Incident Rates for the three (3) years prior to the date of the bid opening. DDC may request a Contractor to update its Questionnaire at any time or to provide more detailed information. The Contractor must provide the requested information within 15 days.

The following criteria will be used by DDC in reviewing the Contractor's responsibility, which will be based on the information provided on the questionnaire:

Criteria 1: OSHA Injury and Illness Rates (I&IR) are no greater than the average for the industry (based on the most current Bureau of Labor Statistics data for the Contractors SIC code); and

Criteria 2: Insurance workers compensation Experience Modification Rate (EMR) equal to or less than 1.0; and

Criteria 3: Any willful violations issued by OSHA or NYC DOB within the last three (3) years; and

Criteria 4: A fatality (worker or member of public) and injuries, requiring OSHA notification, experienced on or near Contractor's worksite within the last three (3) years; and

Criteria 5: Past safety performance on DDC projects (accidents; status of safety program and site safety plan submittals; etc.)

Criteria 6: OSHA violation history for the last three (3) years;

Criteria 7: Contractor shall provide OSHA Injury and Illness Records (currently OSHA 300 and 300A Logs) for the last three (3) years.

If the Contractor fails to meet the basic criteria listed above, the Construction Safety Unit may request, through the ACCO, more details concerning the Contractor's safety experience. DDC may request the Contractor to provide copies of, among other things, accident investigation reports, OSHA records, OSHA and NYC DOB citations, EPA citations and written corrective action plan.

VI. SAFETY PROGRAM AND SITE SAFETY PLAN

Within thirty (30) days from the Award Date, or as otherwise directed, the Contractor shall submit the following: (1) Safety Program, and (2) Site Safety Plan. The Safety Program shall set forth the Contractor's overall safety policy, regulatory compliance plan and minimum safety standards. The Site Safety Plan shall identify project work scope, safety hazards associated with the project tasks, and include specific safety procedures and training appropriate and necessary to complete the work. The Safety Program and the Site Safety Plan are subject to review and acceptance by the Construction Safety Unit prior to the commencement of work at the site. Failure by the Contractor to submit an acceptable Site Safety Plan and Safety Program shall be grounds for default.

Safety Program: Corporate Safety Program established by the Contractor that includes the Contractor's overall safety policy, regulatory compliance plan and basic safety procedures covering all aspects of construction operations, performed by the Contractor. The Safety Program shall be a written document with a separate section describing each element of the Safety Program. The Safety Program shall have at minimum the following elements applicable to the Contractor's operations:

- Responsibility and Organization – Contractor's company organization chart, including titles, names, contact information, roles and responsibilities for key personnel, etc.
- Safety Training Program – Contractor's corporate training program.
- Hazard Corrective Actions – Criteria for safety inspections, identification of safety non-compliances, implementation and verification of corrective actions, forms to document safety inspections results, etc.
- Accident/Exposure Investigation
- Recordkeeping and Reporting Injuries – Responsible staff; reporting and recording criteria; OSHA 300 and 300A form completion, etc.
- Fire Protection and Prevention Program
- Housekeeping
- Illumination
- Sanitation
- Personal Protective Equipment (PPE) – Company policy for the use of head protection, foot protection, hearing protection, eye and face protection, protective clothing, and any additional protective equipment based on work tasks; PPE inspection and replacement policy.
- Hazard Communication Program
- Employee Emergency Action Plan
- Protection of Underground Facilities and Utilities
- Ionizing/Nonionizing Radiation
- Material Handling, Storage, Use and Disposal
- Tools – Hand and Power
- Signs, Signals, and Barricades
- Scaffold – Local Law 52 requirements, installation, use, inspection, dismantling, training and general safety requirements.
- Welding and Cutting
- Electrical Safety
- Fall Protection
- Cranes, Derrick, Hoists, Elevators, Conveyors
- Excavation Safety
- Concrete and Masonry Construction
- Maintenance and Protection of Traffic
- Steel Erection
- Demolition
- Blasting and the Use of Explosives
- Stairways and Ladders

- Toxic and Hazardous Substances
- Alcohol and Drug Abuse Policy
- Rodents and Vermin
- Occupational Noise Exposure
- Confined Space Program – General confined Space Program: training requirements, confined space hazard evaluation procedure, atmospheric testing procedure, confined space classification, permit-required procedure, communication procedure, rescue procedure, forms, etc.
- Construction Vehicles/Heavy Equipment
- Dust Control Procedures

Site Safety Plan: The Site Safety Plan shall be a written document and shall apply to all project specific Contractor and subcontractor operations, and shall have at a minimum, the following elements with each element described in a separate section (It may be necessary to modify the basic format for certain unique or high-risk projects, such as tunnels or high-rise construction):

- Project Work Scope – Detailed information regarding work tasks that will be performed by contractor and subcontractors under the project.
- Responsibility and Organization – Contractor's organization chart with responsible staff for the project, including titles, names, contact information, roles and responsibilities.
- Safety Training and Education – OSHA 10 Hours training, requirements for daily safety briefings and weekly safety meetings, any work task specific training, responsible staff for implementation of training program for the project.
- Job Hazard Analysis (JHA) – Project specific Job Hazard Analysis including work tasks, identified hazards, hazard control methods (administrative, engineering, PPE), contractor's name, project id, location, name and signature of a certifying person, hazard assessment date.
- Protection of Public
- Hazard Corrective Actions – Responsible staff, forms, frequency of safety inspections and implementation of corrective actions.
- Accident/Exposure Investigation – Accident/incident notification procedure of DDC project staff. Project specific procedures for accident investigation and implementation of corrective actions.
- First Aid and Medical Attention – Responsible staff, location and inspection of First Aid kit, directions to local hospitals; emergency telephone numbers.
- Project Specific Fire Protection and Prevention Program.
- Project Specific Illumination Procedure.
- Project Specific Sanitation Procedure.
- Personal Protective Equipment (PPE)
- Hazard Communication Program – Responsible staff; training; SDS records, project specific list of chemical; location of the program and SDS records.
- Means of Egress – Information regarding free and unobstructed egress from all parts of the building or structure; exit marking; maintenance of means of egress, etc.
- Employee Emergency Action Plan – Project specific: responsible staff, emergency alarm system, evacuation procedure, procedure to account for employees after evacuation, etc.
- Evacuation Plan – Project specific evacuation plan (drawing/scheme) with exists and evacuation routes.
- Protection of Underground Facilities and Utilities, including responsible staff.
- Ionizing/Nonionizing Radiation – Competent person, license and qualification requirements, type of radiation, employees exposure and protection, etc.
- Material Handling, Storage, Use and Disposal – Project specific information regarding material storage and disposal.
- Signs, Signals, and Barricades – Use of danger/warning signs, sidewalk closure, safety instruction signs, pedestrian fencing and barricades, etc.
- Scaffold – Project specific scaffold types, training, scaffold drawings, competent person, criteria for project specific scaffold, falling object protection.

- Welding and Cutting – project specific procedure for welding and cutting, including all necessary safety requirements such as fire prevention, personal protective equipment, hot work permits, FDNY certificate requirements.
- Fall Protection – Project specific information regarding selected fall protection systems, fall protection plan.
- Cranes, Derrick, Hoists, Elevators, Conveyors – project specific equipment information including type, rated load capacity, manufacture specification requirements, competent person, exposure to falling load, inspection, recordkeeping, clearance requirements, communication procedure, ground lines, permits.
- Excavation Safety – Competent person, project specific protective system.
- Maintenance and Protection of Traffic Plan – Project specific MPT plan, flagmen training.
- Steel Erection – Site specific erection plan, requirements for applicable written notifications, competent person.
- Demolition – Engineering survey, including written evidence, disconnection of all effected utilities, identification of all hazardous chemicals, materials, gases, etc., floor openings, chutes, inspection and maintenance of all stairs/passageways, removal of materials/debris/structural elements, lock out/tag out, competent person.
- Blasting and the Use of Explosives – Project specific safety procedures, warning signs, training/qualification, transportation, storage and use of explosives, inspection.
- Toxic and Hazardous Substances – Safety procedures for substances to be used on project.
- Noise Mitigation Plan – Completed project specific Noise Mitigation Plan.
- Confined Space Program – Project specific Confined Space Program, responsible staff, training records, equipment information, rescue procedure, list of project specific confined spaces, forms.
- Construction Vehicles/Heavy Equipment – Type of construction vehicles/heavy equipment to be used on site.
- Dust Mitigation Plan – Completed project specific Dust Mitigation Plan.

The most critical component of the Site Safety Plan is the Job Hazard Analysis (JHA) section. The JHA form is a written document prepared by the contractor. The contractor must conduct a site and task assessment JHA to identify the major job steps and any potential safety or environmental hazards related to performance of the work, eliminate or implement controls for the potential hazards, and identify proper personal protective equipment for the task. The JHA shall be communicated to all contractor/subcontractor personnel on site.
The initial Job Hazard Assessment form shall be included in the contractor's Site Safety Plan and the current form shall be available at the construction site for reference.

Certain DDC programs, such as Job Order Contracting System (JOCS), may not necessarily require Site Safety Plans. The JOCS contractor shall submit a Safety Program. The Site Safety Plan requirement for the JOCS contractor will be determined by QA&CS based on a project work scope, construction activities and project location. In addition, certain DDC Operating Units may establish client-specific program or safety requirements. The contractor's Site Safety Plan must address such client-specific program or safety requirements.

VII. KICK-OFF MEETINGS/PRE-CONSTRUCTION AND SAFETY REVIEW

RE/CPM shall invite QA&CS Construction Safety Unit to the construction kick-off meeting. A QA&CS representative will participate in this meeting with the Contractor and RE/CPM prior to the start of the project for the purpose of:

A. Reviewing the safety issues detailed in the contract.
B. Reviewing the Site Safety Plan.
C. Reviewing any new issues or information that was not previously addressed.
D. Discussing planned inspections and audits of the site by QA&CS personnel.

VIII. EVALUATION DURING WORK IN PROGRESS

The Contractor's adherence to these Safety Requirements will be monitored throughout the project. This will be accomplished by the following:

A. Use of a safety checklist by a representative of the Construction Safety Unit or other designated DDC representative or Consultant during regular, unannounced inspections of the job site. Field Exit Conferences will be held with the RE/CPM, Contractor Project Safety Representatives.

B. The RE/CPM will continually monitor the safety and environmental performance of the contractor's employees and work methods. Deficiencies shall be brought to the attention of the contractor's representative on site for immediate correction. The DDC representative will maintain a written record of these deficiencies and have these records available upon request. Any critical deficiencies shall be immediately reported to QA&CS phone# (718) 391-1624 or (718) 391-1911.

C. If the Contractor's safety performance during the project is not up to DDC standards (safety performance measure, accident/incident rate, etc.) the Director – QA&CS, or his/her designee will meet with the Contractor's Project Safety Representative and or Project Safety Manager, the DDC Project Manager, the RE/CPM, and the DDC Environmental Specialist (if environmental issues are involved). The purpose of this meeting is to 1) determine the level of non-compliance; 2) explain and clarify the safety/environmental provisions; 3) agree on a future course of action to correct the deficiencies.

D. If the deficiencies continue to occur with inadequate attention by the contractor, this shall, among other remedies available, be grounds for default.

E. The contractor shall within 1 hour inform the RE/CPM/CM of all accidents/incidents including all fatalities, any injuries to employees or members of the general public, and property damage (e.g., structural damage, equipment rollovers, utility damage, loads dropped from crane). The RE/CPM shall notify the Construction Safety Unit as per DDC's Construction Safety Emergency and Accident Notification and Response Protocol and shall maintain a record of all contractor accidents/incidents for the project.

F. The Construction Safety Unit shall be notified within two (2) hours of the start of any NYS-DOL/ NYC-COSH/ OSHA/ EPA inspections.

IX. SAFETY PERFORMANCE EVALUATION

The contractor's safety record, including accident/incident history and DDC safety inspection results, will be considered as part of the Contractor's performance evaluation at the conclusion of the project. Poor safety performance during the course of the project shall be a reason to rate a Contractor unsatisfactory which may be reflected in the City's Vendex system and will be considered for future procurement actions as set forth in the City's Procurement Policy Board Rules.

CITY OF NEW YORK

STANDARD CONSTRUCTION CONTRACT

DECEMBER 2013

(NO TEXT ON THIS PAGE)

CITY OF NEW YORK
STANDARD CONSTRUCTION CONTRACT

TABLE OF CONTENTS

CHAPTER I
THE CONTRACT AND DEFINITIONS

ARTICLE 1.	THE CONTRACT	1
ARTICLE 2.	DEFINITIONS	1

CHAPTER II
THE WORK AND ITS PERFORMANCE

ARTICLE 3.	CHARACTER OF THE WORK	4
ARTICLE 4.	MEANS AND METHODS OF CONSTRUCTION	4
ARTICLE 5.	COMPLIANCE WITH LAWS	5
ARTICLE 6.	INSPECTION	10
ARTICLE 7.	PROTECTION OF WORK AND OF PERSONS AND PROPERTY; NOTICES AND INDEMNIFICATION	11

CHAPTER III
TIME PROVISIONS

ARTICLE 8.	COMMENCEMENT AND PROSECUTION OF THE WORK	12
ARTICLE 9.	PROGRESS SCHEDULES	12
ARTICLE 10.	REQUESTS FOR INFORMATION OR APPROVAL	13
ARTICLE 11.	NOTICE OF CONDITIONS CAUSING DELAY AND DOCUMENTATION OF DAMAGES CAUSED BY DELAY	13
ARTICLE 12.	COORDINATION WITH OTHER CONTRACTORS	17
ARTICLE 13.	EXTENSION OF TIME FOR PERFORMANCE	18
ARTICLE 14.	COMPLETION AND FINAL ACCEPTANCE OF THE WORK	21
ARTICLE 15.	LIQUIDATED DAMAGES	22
ARTICLE 16.	OCCUPATION OR USE PRIOR TO COMPLETION	22

CHAPTER IV
SUBCONTRACTS AND ASSIGNMENTS

ARTICLE 17.	SUBCONTRACTS	23
ARTICLE 18.	ASSIGNMENTS	25

CITY OF NEW YORK
STANDARD CONSTRUCTION CONTRACT

TABLE OF CONTENTS

CHAPTER V
CONTRACTOR'S SECURITY AND GUARANTY

ARTICLE 19.	SECURITY DEPOSIT	26
ARTICLE 20.	PAYMENT GUARANTEE	26
ARTICLE 21.	RETAINED PERCENTAGE	29
ARTICLE 22.	INSURANCE	29
ARTICLE 23.	MONEY RETAINED AGAINST CLAIMS	35
ARTICLE 24.	MAINTENANCE AND GUARANTY	36

CHAPTER VI
CHANGES, EXTRA WORK AND DOCUMENTATION OF CLAIM

ARTICLE 25.	CHANGES	37
ARTICLE 26.	METHODS OF PAYMENT FOR OVERRUNS AND EXTRA WORK	37
ARTICLE 27.	RESOLUTION OF DISPUTES	40
ARTICLE 28.	RECORD KEEPING FOR EXTRA OR DISPUTED WORK OR WORK ON A TIME & MATERIALS BASIS	44
ARTICLE 29.	OMITTED WORK	45
ARTICLE 30.	NOTICE AND DOCUMENTATION OF COSTS AND DAMAGES; PRODUCTION OF FINANCIAL RECORDS	45

CHAPTER VII
POWERS OF THE RESIDENT ENGINEER, THE ENGINEER OR ARCHITECT AND THE COMMISSIONER

ARTICLE 31.	THE RESIDENT ENGINEER	46
ARTICLE 32.	THE ENGINEER OR ARCHITECT OR PROJECT MANAGER	47
ARTICLE 33.	THE COMMISSIONER	47
ARTICLE 34.	NO ESTOPPEL	48

CHAPTER VIII
LABOR PROVISIONS

ARTICLE 35.	EMPLOYEES	48
ARTICLE 36.	NO DISCRIMINATION	50
ARTICLE 37.	LABOR LAW REQUIREMENTS	52
ARTICLE 38.	PAYROLL REPORTS	57
ARTICLE 39.	DUST HAZARDS	58

TABLE OF CONTENTS

CHAPTER IX
PARTIAL AND FINAL PAYMENTS

ARTICLE 40.	CONTRACT PRICE	58
ARTICLE 41.	BID BREAKDOWN ON LUMP SUM	58
ARTICLE 42.	PARTIAL PAYMENTS	58
ARTICLE 43.	PROMPT PAYMENT	59
ARTICLE 44.	SUBSTANTIAL COMPLETION PAYMENT	59
ARTICLE 45.	FINAL PAYMENT	60
ARTICLE 46.	ACCEPTANCE OF FINAL PAYMENT	61
ARTICLE 47.	APPROVAL BY PUBLIC DESIGN COMMISSION	62

CHAPTER X
CONTRACTOR'S DEFAULT

ARTICLE 48.	COMMISSIONER'S RIGHT TO DECLARE CONTRACTOR IN DEFAULT	62
ARTICLE 49.	EXERCISE OF THE RIGHT TO DECLARE DEFAULT	64
ARTICLE 50.	QUITTING THE SITE	64
ARTICLE 51.	COMPLETION OF THE WORK	64
ARTICLE 52.	PARTIAL DEFAULT	64
ARTICLE 53.	PERFORMANCE OF UNCOMPLETED WORK	65
ARTICLE 54.	OTHER REMEDIES	65

CHAPTER XI
MISCELLANEOUS PROVISIONS

ARTICLE 55.	CONTRACTOR'S WARRANTIES	66
ARTICLE 56.	CLAIMS AND ACTIONS THEREON	66
ARTICLE 57.	INFRINGEMENT	66
ARTICLE 58.	NO CLAIM AGAINST OFFICERS, AGENTS OR EMPLOYEES	67
ARTICLE 59.	SERVICE OF NOTICES	67
ARTICLE 60.	UNLAWFUL PROVISIONS DEEMED STRICKEN FROM CONTRACT	67
ARTICLE 61.	ALL LEGAL PROVISIONS DEEMED INCLUDED	67
ARTICLE 62.	TAX EXEMPTION	67
ARTICLE 63.	INVESTIGATION(S) CLAUSE	69
ARTICLE 64.	TERMINATION BY THE CITY	71
ARTICLE 65.	CHOICE OF LAW, CONSENT TO JURISDICTION AND VENUE	73

TABLE OF CONTENTS

CHAPTER XI (CONT'D)
MISCELLANEOUS PROVISIONS

ARTICLE 66.	PARTICIPATION IN AN INTERNATIONAL BOYCOTT	74
ARTICLE 67.	LOCALLY BASED ENTERPRISE PROGRAM	74
ARTICLE 68.	ANTITRUST	75
ARTICLE 69.	MACBRIDE PRINCIPLES PROVISIONS	75
ARTICLE 70	ELECTRONIC FILING/NYC DEVELOPMENT HUB	77
ARTICLE 71.	PROHIBITION OF TROPICAL HARDWOODS	77
ARTICLE 72.	CONFLICTS OF INTEREST	78
ARTICLE 73.	MERGER CLAUSE	78
ARTICLE 74.	STATEMENT OF WORK	78
ARTICLE 75.	COMPENSATION TO BE PAID TO CONTRACTOR	78
ARTICLE 76:	ELECTRONIC FUNDS TRANSFER	78
ARTICLE 77:	RECORDS RETENTION	79
ARTICLE 78:	PARTICIPATION BY MINORITY-OWNED AND WOMEN-OWNED BUSINESS ENTERPRISES IN CITY PROCUREMENT	79

SIGNATURES	87
ACKNOWLEDGMENT BY CORPORATION	88
ACKNOWLEDGMENT BY PARTNERSHIP	88
ACKNOWLEDGMENT BY INDIVIDUAL	88
ACKNOWLEDGMENT BY COMMISSIONER	89
AUTHORITY	90
COMPTROLLER'S CERTIFICATE	90
MAYOR'S CERTIFICATE	91
PERFORMANCE BOND #1	92
PERFORMANCE BOND #2	96
PAYMENT BOND	100

WITNESSETH:

The parties, in consideration of the mutual agreements contained herein, agree as follows:

CHAPTER I
THE CONTRACT AND DEFINITIONS

ARTICLE 1. THE CONTRACT

1.1 Except for titles, subtitles, headings, running headlines, tables of contents and indices (all of which are printed herein merely for convenience), the following, except for such portions thereof as may be specifically excluded, shall be deemed to be part of this Contract:

1.1.1 All provisions required by law to be inserted in this Contract, whether actually inserted or not;

1.1.2 The Contract Drawings and Specifications;

1.1.3 The General Conditions and Special Conditions, if any;

1.1.4 The Contract;

1.1.5 The Information for Bidders; Request for Proposals; Notice of Solicitation and Proposal For Bids; Bid or Proposal, and, if used, the Bid Booklet;

1.1.6 All Addenda issued prior to the receipt of the bids; the Notice of Award; Performance and Payment Bonds, if required; and the Notice to Proceed or the Order to Work.

1.2 Should any conflict occur in or between the Drawings and Specifications, the Contractor shall be deemed to have estimated the most expensive way of doing the Work, unless the Contractor shall have asked for and obtained a decision in writing from the Commissioner of the Agency that is entering into this Contract, before the submission of its bid, as to what shall govern.

ARTICLE 2. DEFINITIONS

2.1 The following words and expressions, or pronouns used in their stead, shall, wherever they appear in this Contract, be construed as follows, unless a different meaning is clear from the context:

2.1.1 **"Addendum"** or **"Addenda"** shall mean the additional Contract provisions and/or technical clarifications issued in writing by the Commissioner prior to the receipt of bids.

2.1.2 **"Agency"** shall mean a city, county, borough or other office, position, department, division, bureau, board or commission, or a corporation, institution or agency of government, the expenses of which are paid in whole or in part from the City treasury.

2.1.3 **"Agency Chief Contracting Officer" (ACCO)** shall mean a person delegated authority by the Commissioner to organize and supervise the procurement activity of subordinate Agency staff in conjunction with the CCPO, or his/her duly authorized representative.

2.1.4 **"Allowance"** shall mean a sum of money which the Agency may include in the total amount of the Contract for such specific contingencies as the Agency believes may be necessary to complete the Work, *e.g.*, lead or asbestos remediation, and for which the Contractor will be paid on the basis of stipulated unit prices or a formula set forth in the Contract or negotiated between the parties provided, however, that if the Contractor is not directed to use the Allowance, the Contractor shall have no right to such money and it shall be deducted from the total amount of the Contract.

2.1.5 **"City"** shall mean the City of New York.

2.1.6 **"City Chief Procurement Officer" (CCPO)** shall mean a person delegated authority by the Mayor to coordinate and oversee the procurement activity of Mayoral agency staff, including the ACCO and any offices which have oversight responsibility for the procurement of construction, or his/her duly authorized representative.

2.1.7 **"Commissioner"** shall mean the head of the Agency that has entered into this Contract, or his/her duly authorized representative.

2.1.8 **"Comptroller"** shall mean the Comptroller of the City of New York.

2.1.9 **"Contract"** or **"Contract Documents"** shall mean each of the various parts of the contract referred to in Article 1 hereof, both as a whole and severally.

2.1.10 **"Contract Drawings"** shall mean only those drawings specifically entitled as such and listed in the Specifications or in any Addendum, or any drawings furnished by the Commissioner, pertaining or supplemental thereto.

2.1.11 **"Contract Work"** shall mean everything required to be furnished and done by the Contractor by any one or more of the parts of the Contract referred to in Article 1, except Extra Work as hereinafter defined.

2.1.12 **"Contractor"** shall mean the entity which executed this Contract, whether a corporation, firm, partnership, joint venture, individual, or any combination thereof, and its, their, his/her successors, personal representatives, executors, administrators, and assigns, and any person, firm, partnership, joint venture, individual, or corporation which shall at any time be substituted in the place of the Contractor under this Contract.

2.1.13 **"Days"** shall mean calendar days, except where otherwise specified.

2.1.14 **"Engineer"** or **"Architect"** or **"Project Manager"** shall mean the person so designated in writing by the Commissioner in the Notice to Proceed or the Order to Work to act as such in relation to this Contract, including a private Architect or Engineer or Project Manager, as the case may be. Subject to written approval by the Commissioner, the Engineer, Architect or Project Manager may designate an authorized representative.

2.1.15 **"Engineering Audit Officer" (EAO)** shall mean the person so designated by the Commissioner to perform responsible auditing functions hereunder.

2.1.16 **"Extra Work"** shall mean Work other than that required by the Contract at the time of award which is authorized by the Commissioner pursuant to Chapter VI of this Contract.

2.1.17 **"Federal-Aid Contract"** shall mean a contract in which the United States (federal) Government provides financial funding as so designated in the Information for Bidders.

2.1.18 **"Final Acceptance"** shall mean final written acceptance of all the Work by the Commissioner, a copy of which shall be sent to the Contractor.

2.1.19 **"Final Approved Punch List"** shall mean a list, approved pursuant to Article 14.2.2, specifying those items of Work to be completed by the Contractor after Substantial Completion and dates for the completion of each item of Work.

2.1.20 **"Law"** or **"Laws"** shall mean the Constitution of the State of New York, the New York City Charter, the New York City Administrative Code, a statute of the United States or of the State of New York, a local law of the City of New York, any ordinance, rule or regulation having the force of law, or common law.

2.1.21 **"Materialman"** shall mean any corporation, firm, partnership, joint venture, or individual, other than employees of the Contractor, who or which contracts with the Contractor or any Subcontractor, to fabricate or deliver, or who actually fabricates or delivers, plant, materials or equipment to be incorporated in the Work.

2.1.22 **"Means and Methods of Construction"** shall mean the labor, materials, temporary structures, tools, plant, and construction equipment, and the manner and time of their use, necessary to accomplish the result intended by this Contract.

2.1.23**"Notice to Proceed" or "Order to Work"** shall mean the written notice issued by the Commissioner specifying the time for commencement of the Work and the Engineer, Architect or Project Manager.

2.1.24 **"Other Contractor(s)"** shall mean any contractor (other than the entity which executed this Contract or its Subcontractors) who or which has a contract with the City for work on or adjacent to the building or Site of the Work.

2.1.25 **"Payroll Taxes"** shall mean State Unemployment Insurance (SUI), Federal Unemployment Insurance (FUI), and payments pursuant to the Federal Insurance Contributions Act (FICA).

2.1.26 **"Project"** shall mean the public improvement to which this Contract relates.

2.1.27 **"Procurement Policy Board" (PPB)** shall mean the Agency of the City of New York whose function is to establish comprehensive and consistent procurement policies and rules which shall have broad application throughout the City.

2.1.28 **"Required Quantity"** in a unit price Contract shall mean the actual quantity of any item of Work or materials which is required to be performed or furnished in order to comply with the Contract.

2.1.29 **"Resident Engineer"** shall mean the representative of the Commissioner duly designated by the Commissioner to be his/her representative at the site of the Work.

2.1.30 **"Site"** shall mean the area upon or in which the Contractor's operations are carried on, and such other areas adjacent thereto as may be designated as such by the Engineer.

2.1.31 **"Small Tools"** shall mean items that are ordinarily required for a worker's job function, including but not limited to, equipment that ordinarily has no licensing, insurance

or substantive storage costs associated with it; such as circular and chain saws, impact drills, threaders, benders, wrenches, socket tools, etc.

2.1.32 **"Specifications"** shall mean all of the directions, requirements, and standards of performance applying to the Work as hereinafter detailed and designated under the Specifications.

2.1.33 **"Subcontractor"** shall mean any person, firm or corporation, other than employees of the Contractor, who or which contracts with the Contractor or with its subcontractors to furnish, or actually furnishes labor, or labor and materials, or labor and equipment, or superintendence, supervision and/or management at the Site. Wherever the word Subcontractor appears, it shall also mean sub-Subcontractor.

2.1.34 **"Substantial Completion"** shall mean the written determination by the Engineer that the Work required under this Contract is substantially, but not entirely, complete and the approval of the **Final Approved Punch List**.

2.1.35 **"Work"** shall mean all services required to complete the Project in accordance with the Contract Documents, including without limitation, labor, material, superintendence, management, administration, equipment, and incidentals, and obtaining any and all permits, certifications and licenses as may be necessary and required to complete the Work, and shall include both Contract Work and Extra Work.

CHAPTER II
THE WORK AND ITS PERFORMANCE

ARTICLE 3. CHARACTER OF THE WORK

3.1 Unless otherwise expressly provided in the **Contract Drawings, Specifications,** and **Addenda,** the **Work** shall be performed in accordance with the best modern practice, utilizing, unless otherwise specified in writing, new and unused materials of standard first grade quality and workmanship and design of the highest quality, to the satisfaction of the **Commissioner**.

ARTICLE 4. MEANS AND METHODS OF CONSTRUCTION

4.1 Unless otherwise expressly provided in the **Contract Drawings, Specifications,** and **Addenda,** the **Means and Methods of Construction** shall be such as the **Contractor** may choose; subject, however, to the **Engineer's** right to reject the **Means and Methods of Construction** proposed by the **Contractor** which in the opinion of the **Engineer**:

4.1.1 Will constitute or create a hazard to the **Work**, or to persons or property; or

4.1.2 Will not produce finished **Work** in accordance with the terms of the **Contract**; or

4.1.3 Will be detrimental to the overall progress of the **Project**.

4.2 The **Engineer's** approval of the **Contractor's Means and Methods of Construction**, or his/her failure to exercise his/her right to reject such means or methods, shall not relieve the **Contractor** of its obligation to complete the **Work** as provided in this **Contract**; nor shall the exercise of such right to reject create a cause of action for damages.

ARTICLE 5. COMPLIANCE WITH LAWS

5.1 The **Contractor** shall comply with all **Laws** applicable to this **Contract** and to the **Work** to be done hereunder.

5.2 Procurement Policy Board Rules: This **Contract** is subject to the Rules of the **PPB** ("**PPB** Rules") in effect at the time of the bid opening for this **Contract**. In the event of a conflict between the **PPB** Rules and a provision of this **Contract**, the **PPB** Rules shall take precedence.

5.3 Noise Control Code provisions.

5.3.1 In accordance with the provisions of Section 24-216(b) of the Administrative Code of the **City** ("Administrative Code"), Noise Abatement Contract Compliance, devices and activities which will be operated, conducted, constructed or manufactured pursuant to this **Contract** and which are subject to the provisions of the **City** Noise Control Code shall be operated, conducted, constructed, or manufactured without causing a violation of the Administrative Code. Such devices and activities shall incorporate advances in the art of noise control development for the kind and level of noise emitted or produced by such devices and activities, in accordance with regulations issued by the **Commissioner** of the **City** Department of Environmental Protection.

5.3.2 The **Contractor** agrees to comply with Section 24-219 of the Administrative Code and implementing rules codified at 15 Rules of the City of New York ("RCNY") Section 28-100 *et seq*. In accordance with such provisions, the **Contractor**, if the **Contractor** is the responsible party under such regulations, shall prepare and post a Construction Noise Mitigation Plan at each **Site**, in which the **Contractor** shall certify that all construction tools and equipment have been maintained so that they operate at normal manufacturers operating specifications. If the **Contractor** cannot make this certification, it must have in place an Alternative Noise Mitigation Plan approved by the **City** Department of Environmental Protection. In addition, the **Contractor**'s certified Construction Noise Mitigation Plan is subject inspection by the **City** Department of Environmental Protection in accordance with Section 28-101 of Title 15 of RCNY. No **Contract Work** may take place at a **Site** unless there is a Construction Noise Mitigation Plan or approved Alternative Noise Mitigation Plan in place. In addition, the **Contractor** shall create and implement a noise mitigation training program. Failure to comply with these requirements may result in fines and other penalties pursuant to the applicable provisions of the Administrative Code and RCNY.

5.4 Ultra Low Sulfur Diesel Fuel: In accordance with the provisions of Section 24-163.3 of the Administrative Code, the **Contractor** specifically agrees as follows:

5.4.1 Definitions. For purposes of this Article 5.4, the following definitions apply:

5.4.1(a) "Contractor" means any person or entity that enters into a Public Works Contract with a **City Agency**, or any person or entity that enters into an agreement with such person or entity, to perform work or provide labor or services related to such Public Works Contract.

5.4.1(b) "Motor Vehicle" means any self-propelled vehicle designed for transporting persons or property on a street or highway.

5.4.1(c) "Nonroad Engine" means an internal combustion engine (including the fuel system) that is not used in a Motor Vehicle or a vehicle used solely for competition, or that is not subject to standards promulgated under Section 7411 or Section 7521 of

Title 42 of the United States Code, except that this term shall apply to internal combustion engines used to power generators, compressors or similar equipment used in any construction program or project.

5.4.1(d) "Nonroad Vehicle" means a vehicle that is powered by a Nonroad Engine, fifty (50) horsepower and greater, and that is not a Motor Vehicle or a vehicle used solely for competition, which shall include, but not be limited to, excavators, backhoes, cranes, compressors, generators, bulldozers, and similar equipment, except that this term shall not apply to horticultural maintenance vehicles used for landscaping purposes that are powered by a Nonroad Engine of sixty-five (65) horsepower or less and that are not used in any construction program or project.

5.4.1(e) "Public Works Contract" means a contract with a **City Agency** for a construction program or project involving the construction, demolition, restoration, rehabilitation, repair, renovation, or abatement of any building, structure, tunnel, excavation, roadway, park or bridge; a contract with a **City Agency** for the preparation for any construction program or project involving the construction, demolition, restoration, rehabilitation, repair, renovation, or abatement of any building, structure, tunnel, excavation, roadway, park or bridge; or a contract with a **City Agency** for any final work involved in the completion of any construction program or project involving the construction, demolition, restoration, rehabilitation, repair, renovation, or abatement of any building, structure, tunnel, excavation, roadway, park or bridge.

5.4.1(f) "Ultra Low Sulfur Diesel Fuel" means diesel fuel that has a sulfur content of no more than fifteen parts per million (15 ppm).

5.4.2 Ultra Low Sulfur Diesel Fuel

5.4.2(a) All **Contractors** shall use Ultra Low Sulfur Diesel Fuel in diesel-powered Nonroad Vehicles in the performance of this **Contract**.

5.4.2(b) Notwithstanding the requirements of Article 5.4.2(a), **Contractors** may use diesel fuel that has a sulfur content of no more than thirty parts per million (30 ppm) to fulfill the requirements of this Article 5.4.2, where the Commissioner of the **City** Department of Environmental Protection ("DEP Commissioner") has issued a determination that a sufficient quantity of Ultra Low Sulfur Diesel Fuel is not available to meet the needs of **Agencies** and **Contractors**. Any such determination shall expire after six (6) months unless renewed.

5.4.2(c) **Contractors** shall not be required to comply with this Article 5.4.2 where the **City Agency** letting this **Contract** makes a written finding, which is approved, in writing, by the DEP Commissioner, that a sufficient quantity of Ultra Low Sulfur Diesel Fuel, or diesel fuel that has a sulfur content of no more than thirty parts per million (30 ppm) is not available to meet the requirements of Section 24-163.3 of the Administrative Code, provided that such **Contractor** in its fulfillment of the requirements of this **Contract**, to the extent practicable, shall use whatever quantity of Ultra Low Sulfur Diesel Fuel or diesel fuel that has a sulfur content of no more than thirty parts per million (30 ppm) is available. Any finding made pursuant to this Article 5.4.2(c) shall expire after sixty (60) **Days**, at which time the requirements of this Article 5.4.2 shall be in full force and effect unless the **City Agency** renews the finding in writing and such renewal is approved by the DEP Commissioner.

5.4.2(d) **Contractors** may check on determinations and approvals issued by the DEP Commissioner pursuant to Section 24-163.3 of the Administrative Code, if any, at www.dep.nyc.gov or by contacting the **City Agency** letting this **Contract**.

5.4.2(e) The requirements of this Article 5.4.2 do not apply where they are precluded by federal or State funding requirements or where the **Contract** is an emergency procurement.

5.4.3 Best Available Technology

5.4.3(a) All **Contractors** shall utilize the best available technology for reducing the emission of pollutants for diesel-powered Nonroad Vehicles in the performance of this **Contract**. For determinations of best available technology for each type of diesel-powered Nonroad Vehicle, **Contractors** shall comply with the regulations of the **City** Department of Environmental Protection, as and when adopted, Chapter 14 of Title 15 of the Rules of the City of New York (RCNY). The **Contractor** shall fully document all steps in the best available technology selection process and shall furnish such documentation to the **City Agency** or the DEP Commissioner upon request. The **Contractor** shall retain all documentation generated in the best available technology selection process for as long as the selected best available technology is in use.

5.4.3(b) No **Contractor** shall be required to replace best available technology for reducing the emission of pollutants or other authorized technology utilized for a diesel-powered Nonroad Vehicle in accordance with the provisions of this Article 5.4.3 within three (3) years of having first utilized such technology for such vehicle.

5.4.3(c) This Article 5.4.3 shall not apply to any vehicle used to satisfy the requirements of a specific Public Works Contract for fewer than twenty (20) **Days**.

5.4.3(d) The **Contractor** shall not be required to comply with this Article 5.4.3 with respect to a diesel-powered Nonroad Vehicle under the following circumstances:

5.4.3(d)(i) Where the **City Agency** makes a written finding, which is approved, in writing, by the DEP Commissioner, that the best available technology for reducing the emission of pollutants as required by this Article 5.4.3 is unavailable for such vehicle, the **Contractor** shall use whatever technology for reducing the emission of pollutants, if any, is available and appropriate for such vehicle.

5.4.3(d)(ii) Where the DEP Commissioner has issued a written waiver based upon the **Contractor** having demonstrated to the DEP Commissioner that the use of the best available technology for reducing the emission of pollutants might endanger the operator of such vehicle or those working near such vehicle, due to engine malfunction, the **Contractor** shall use whatever technology for reducing the emission of pollutants, if any, is available and appropriate for such vehicle, which would not endanger the operator of such vehicle or those working near such vehicle.

5.4.3(d)(iii) In determining which technology to use for the purposes of Articles 5.4.3(d)(i) and 5.4.3(d)(ii) above, the **Contractor** shall primarily consider the reduction in emissions of particulate matter and secondarily consider the reduction in emissions of nitrogen oxides associated with the use of such

technology, which shall in no event result in an increase in the emissions of either such pollutant.

5.4.3(d)(iv) The **Contractor** shall submit requests for a finding or a waiver pursuant to this Article 5.4.3(d) in writing to the DEP Commissioner, with a copy to the **ACCO** of the **City Agency** letting this **Contract**. Any finding or waiver made or issued pursuant to Articles 5.4.3(d)(i) and 5.4.3(d)(ii) above shall expire after one hundred eighty (180) **Days**, at which time the requirements of Article 5.4.3(a) shall be in full force and effect unless the **City Agency** renews the finding, in writing, and the DEP Commissioner approves such finding, in writing, or the DEP Commissioner renews the waiver, in writing.

5.4.3(e) The requirements of this Article 5.4.3 do not apply where they are precluded by federal or State funding requirements or where the **Contract** is an emergency procurement.

5.4.4 Section 24-163 of the Administrative Code. The **Contractor** shall comply with Section 24-163 of the Administrative Code related to the idling of the engines of motor vehicles while parking.

5.4.5 Compliance

5.4.5(a) The **Contractor's** compliance with Article 5.4 may be independently monitored. If it is determined that the **Contractor** has failed to comply with any provision of Article 5.4, any costs associated with any independent monitoring incurred by the **City** shall be reimbursed by the **Contractor**.

5.4.5(b) Any **Contractor** who violates any provision of Article 5.4, except as provided in Article 5.4.5(c) below, shall be liable for a civil penalty between the amounts of one thousand ($1,000) and ten thousand ($10,000) dollars, in addition to twice the amount of money saved by such **Contractor** for failure to comply with Article 5.4.

5.4.5(c) No **Contractor** shall make a false claim with respect to the provisions of Article 5.4 to a **City Agency**. Where a **Contractor** has been found to have done so, such **Contractor** shall be liable for a civil penalty of twenty thousand ($20,000) dollars, in addition to twice the amount of money saved by such **Contractor** in association with having made such false claim.

5.4.6 Reporting

5.4.6(a) For all Public Works Contracts covered by this Article 5.4, the **Contractor** shall report to the **City Agency** the following information:

5.4.6(a)(i) The total number of diesel-powered Nonroad Vehicles used to fulfill the requirements of this Public Works Contract;

5.4.6(a)(ii) The number of such Nonroad Vehicles that were powered by Ultra Low Sulfur Diesel Fuel;

5.4.6(a)(iii) The number of such Nonroad Vehicles that utilized the best available technology for reducing the emission of pollutants, including a breakdown by vehicle model and the type of technology;

5.4.6(a)(iv) The number of such Nonroad Vehicles that utilized such other authorized technology in accordance with Article 5.4.3, including a breakdown by vehicle model and the type of technology used for each such vehicle;

5.4.6(a)(v) The locations where such Nonroad Vehicles were used; and

5.4.6(a)(vi) Where a determination is in effect pursuant to Article 5.4.2(b) or 5.4.2(c), detailed information concerning the **Contractor's** efforts to obtain Ultra Low Sulfur Diesel Fuel or diesel fuel that has a sulfur content of no more than thirty parts per million (30 ppm).

5.4.6(b) The **Contractor** shall submit the information required by Article 5.4.6(a) at the completion of **Work** under the Public Works Contract and on a yearly basis no later than August 1 throughout the term of the Public Works Contract. The yearly report shall cover **Work** performed during the preceding fiscal year (July 1 - June 30).

5.5 Ultra Low Sulfur Diesel Fuel. In accordance with the Coordinated Construction Act for Lower Manhattan, as amended:

5.5.1 Definitions. For purposes of this Article 5.5, the following definitions apply:

5.5.1(a) "Lower Manhattan" means the area to the south of and within the following lines: a line beginning at a point where the United States pierhead line in the Hudson River as it exists now or may be extended would intersect with the southerly line of West Houston Street in the Borough of Manhattan extended, thence easterly along the southerly side of West Houston Street to the southerly side of Houston Street, thence easterly along the southerly side of Houston Street to the southerly side of East Houston Street, thence northeasterly along the southerly side of East Houston Street to the point where it would intersect with the United States pierhead line in the East River as it exists now or may be extended, including tax lots within or immediately adjacent thereto.

5.5.1(b) "Lower Manhattan Redevelopment Project" means any project in Lower Manhattan that is funded in whole or in part with federal or State funding, or any project intended to improve transportation between Lower Manhattan and the two air terminals in the **City** known as LaGuardia Airport and John F. Kennedy International Airport, or between Lower Manhattan and the air terminal in Newark known as Newark Liberty International Airport, and that is funded in whole or in part with federal funding.

5.5.1(c) "Nonroad Engine" means an internal combustion engine (including the fuel system) that is not used in a Motor Vehicle or a vehicle used solely for competition, or that is not subject to standards promulgated under Section 7411 or Section 7521 of Title 42 of the United States Code, except that this term shall apply to internal combustion engines used to power generators, compressors or similar equipment used in any construction program or project.

5.5.1(d) "Nonroad Vehicle" means a vehicle that is powered by a Nonroad Engine, fifty (50) horsepower (HP) and greater, and that is not a Motor Vehicle or a vehicle used solely for competition, which shall include, but not be limited to, excavators, backhoes, cranes, compressors, generators, bulldozers, and similar equipment, except

that this terms shall not apply to horticultural maintenance vehicles used for landscaping purposes that are powered by a Nonroad Engine of sixty-five (65) HP or less and that are not used in any construction program or project.

5.5.1(e) "Ultra Low Sulfur Diesel Fuel" means diesel fuel that has a sulfur content of no more than fifteen parts per million (15 ppm).

5.5.2 Requirements. **Contractors** and **Subcontractors** are required to use only Ultra Low Sulfur Diesel Fuel to power the diesel-powered Nonroad Vehicles with engine HP rating of fifty (50) HP and above used on a Lower Manhattan Redevelopment Project and, where practicable, to reduce the emission of pollutants by retrofitting such Nonroad Vehicles with oxidation catalysts, particulate filters, or technology that achieves lowest particulate matter emissions.

5.6 Pesticides. In accordance with Section 17-1209 of the Administrative Code, to the extent that the **Contractor** or any **Subcontractor** applies pesticides to any property owned or leased by the **City**, the **Contractor,** and any **Subcontractor** shall comply with Chapter 12 of the Administrative Code.

5.7 Waste Treatment, Storage, and Disposal Facilities and Transporters. In connection with the **Work**, the **Contractor** and any **Subcontractor** shall use only those waste treatment, storage, and disposal facilities and waste transporters that possess the requisite license, permit or other governmental approval necessary to treat, store, dispose, or transport the waste, materials or hazardous substances.

5.8 Environmentally Preferable Purchasing. The **Contractor** shall ensure that products purchased or leased by the **Contractor** or any **Subcontractor** for the **Work** that are not specified by the **City** or are submitted as equivalents to a product specified by the **City** comply with the requirements of the New York City Environmentally Preferable Purchasing Program contained in Chapter 11 of Title 43 of the RCNY, pursuant to Chapter 3 of Title 6 of the Administrative Code.

ARTICLE 6. INSPECTION

6.1 During the progress of the **Work** and up to the date of **Final Acceptance**, the **Contractor** shall at all times afford the representatives of the **City** every reasonable, safe, and proper facility for inspecting all **Work** done or being done at the **Site** and also for inspecting the manufacture or preparation of materials and equipment at the place of such manufacture or preparation.

6.2 The **Contractor's** obligation hereunder shall include the uncovering or taking down of finished **Work** and its restoration thereafter; provided, however, that the order to uncover, take down and restore shall be in writing, and further provided that if **Work** thus exposed proves satisfactory, and if the **Contractor** has complied with Article 6.1, such uncovering or taking down and restoration shall be considered an item of **Extra Work** to be paid for in accordance with the provisions of Article 26. If the **Work** thus exposed proves unsatisfactory, the **City** has no obligation to compensate the **Contractor** for the uncovering, taking down or restoration.

6.3 Inspection and approval by the **Commissioner**, the **Engineer**, **Project Manager**, or **Resident Engineer**, of finished **Work** or of **Work** being performed, or of materials and equipment at the place of manufacture or preparation, shall not relieve the **Contractor** of its obligation to perform the **Work** in strict accordance with the **Contract**. Finished or unfinished **Work** not found to be in strict accordance with the **Contract** shall be replaced as directed by the **Engineer**, even though such **Work** may have been previously approved and paid for. Such corrective **Work** is **Contract Work** and shall not be deemed **Extra Work**.

6.4 Rejected **Work** and materials shall be promptly taken down and removed from the **Site**, which must at all times be kept in a reasonably clean and neat condition.

ARTICLE 7. PROTECTION OF WORK AND OF PERSONS AND PROPERTY; NOTICES AND INDEMNIFICATION

7.1 During the performance of the **Work** and up to the date of **Final Acceptance**, the **Contractor** shall be under an absolute obligation to protect the finished and unfinished **Work** against any damage, loss, injury, theft and/or vandalism and in the event of such damage, loss, injury, theft and/or vandalism, it shall promptly replace and/or repair such **Work** at the **Contractor's** sole cost and expense, as directed by the **Resident Engineer**. The obligation to deliver finished **Work** in strict accordance with the **Contract** prior to **Final Acceptance** shall be absolute and shall not be affected by the **Resident Engineer's** approval of, or failure to prohibit, the **Means and Methods of Construction** used by the **Contractor**.

7.2 During the performance of the **Work** and up to the date of **Final Acceptance**, the **Contractor** shall take all reasonable precautions to protect all persons and the property of the **City** and of others from damage, loss or injury resulting from the **Contractor's**, and/or its **Subcontractors'** operations under this **Contract.** The **Contractor's** obligation to protect shall include the duty to provide, place or replace, and adequately maintain at or about the **Site** suitable and sufficient protection such as lights, barricades, and enclosures.

7.3 The **Contractor** shall comply with the notification requirements set forth below in the event of any loss, damage or injury to **Work**, persons or property, or any accidents arising out of the operations of the **Contractor** and/or its **Subcontractors** under this **Contract**.

7.3.1 The **Contractor** shall make a full and complete report in writing to the **Resident Engineer** within three (3) **Days** after the occurrence.

7.3.2 The **Contractor** shall also send written notice of any such event to all insurance carriers that issued potentially responsive policies (including commercial general liability insurance carriers for events relating to the **Contractor**'s own employees) no later than twenty (20) days after such event and again no later than twenty (20) days after the initiation of any claim and/or action resulting therefrom. Such notice shall contain the following information: the number of the insurance policy, the name of the Named Insured, the date and location of the incident, and the identity of the persons injured or property damaged. For any policy on which the **City** and/or the **Engineer**, **Architect**, or **Project Manager** are Additional Insureds, such notice shall expressly specify that "this notice is being given on behalf of the City of New York as Additional Insured, such other Additional Insureds, as well as the Named Insured."

7.3.2(a) Whenever such notice is sent under a policy on which the **City** is an Additional Insured, the **Contractor** shall provide copies of the notice to the **Comptroller,** the **Commissioner** and the **City** Corporation Counsel. The copy to the **Comptroller** shall be sent to the Insurance Unit, NYC Comptroller's Office, 1 Centre Street – Room 1222, New York, New York, 10007. The copy to the **Commissioner** shall be sent to the address set forth in Schedule A of the General Conditions. The copy to the **City** Corporation Counsel shall be sent to Insurance Claims Specialist, Affirmative Litigation Division, New York City Law Department, 100 Church Street, New York, New York 10007.

7.3.2(b) If the **Contractor** fails to provide any of the foregoing notices to any appropriate insurance carrier(s) in a timely and complete manner, the **Contractor** shall indemnify the **City** for all losses, judgments, settlements, and expenses, including reasonable attorneys' fees, arising from an insurer's disclaimer of coverage citing late notice by or on behalf of the **City**.

7.4 To the fullest extent permitted by law, the **Contractor** shall defend, indemnify, and hold the **City**, its employees, and officials (the "Indemnitees") harmless against any and all claims (including but not limited to claims asserted by any employee of the **Contractor** and/or its **Subcontractors**) and costs and expenses of whatever kind (including but not limited to payment or reimbursement of attorneys' fees and disbursements) allegedly arising out of or in any way related to the operations of the **Contractor** and/or its **Subcontractors** in the performance of this **Contract** or from the **Contractor's** and/or its **Subcontractors'** failure to comply with any of the provisions of this **Contract** or of the **Law**. Such costs and expenses shall include all those incurred in defending the underlying claim and those incurred in connection with the enforcement of this Article 7.4 by way of cross-claim, third-party claim, declaratory action or otherwise. The parties expressly agree that the indemnification obligation hereunder contemplates (1) full indemnity in the event of liability imposed against the Indemnitees without negligence and solely by reason of statute, operation of **Law** or otherwise; and (2) partial indemnity in the event of any actual negligence on the part of the Indemnitees either causing or contributing to the underlying claim (in which case, indemnification will be limited to any liability imposed over and above that percentage attributable to actual fault whether by statute, by operation of **Law**, or otherwise). Where partial indemnity is provided hereunder, all costs and expenses shall be indemnified on a pro rata basis.

7.4.1 Indemnification under Article 7.4 or any other provision of the **Contract** shall operate whether or not **Contractor** or its **Subcontractors** have placed and maintained the insurance specified under Article 22.

7.5 The provisions of this Article 7 shall not be deemed to create any new right of action in favor of third parties against the **Contractor** or the **City**.

CHAPTER III
TIME PROVISIONS

ARTICLE 8. COMMENCEMENT AND PROSECUTION OF THE WORK

8.1 The **Contractor** shall commence the **Work** on the date specified in the **Notice to Proceed** or the **Order to Work**. The time for performance of the **Work** under the **Contract** shall be computed from the date specified in the **Notice to Proceed** or the **Order to Work. TIME BEING OF THE ESSENCE** to the **City**, the **Contractor** shall thereafter prosecute the **Work** diligently, using such **Means and Methods of Construction** as are in accord with Article 4 herein and as will assure its completion not later than the date specified in this Contract, or on the date to which the time for completion may be extended.

ARTICLE 9. PROGRESS SCHEDULES

9.1 To enable the **Work** to be performed in an orderly and expeditious manner, the **Contractor**, within fifteen (15) **Days** after the **Notice to Proceed** or **Order to Work**, unless otherwise directed by the **Engineer**, shall submit to the **Engineer** a proposed progress schedule based on the Critical Path Method in the form of a bar graph or in such other form as specified by the **Engineer**, and monthly cash flow requirements, showing:

9.1.1 The anticipated time of commencement and completion of each of the various operations to be performed under this **Contract**; and

9.1.2 The sequence and interrelation of each of these operations with the others and with those of other related contracts; and

9.1.3 The estimated time required for fabrication or delivery, or both, of all materials and equipment required for the **Work**, including the anticipated time for obtaining required approvals pursuant to Article 10; and

9.1.4 The estimated amount in dollars the **Contractor** will claim on a monthly basis.

9.2 The proposed schedule shall be revised as directed by the **Engineer**, until finally approved by the **Engineer**, and after such approval, subject to the provisions of Article 11, shall be strictly adhered to by the **Contractor**.

9.3 If the **Contractor** shall fail to adhere to the approved progress schedule, or to the schedule as revised pursuant to Article 11, it shall promptly adopt such other or additional **Means and Methods of Construction**, at its sole cost and expense, as will make up for the time lost and will assure completion in accordance with the approved progress schedule. The approval by the **City** of a progress schedule which is shorter than the time allotted under the **Contract** shall not create any liability for the **City** if the approved progress schedule is not met.

9.4 The **Contractor** will not receive any payments until the proposed progress schedule is submitted.

ARTICLE 10. REQUESTS FOR INFORMATION OR APPROVAL

10.1 From time to time as the **Work** progresses and in the sequence indicated by the approved progress schedule, the **Contractor** shall submit to the **Engineer** a specific request in writing for each item of information or approval required by the **Contractor**. These requests shall state the latest date upon which the information or approval is actually required by the **Contractor**, and shall be submitted in a reasonable time in advance thereof to provide the **Engineer** a sufficient time to act upon such submissions, or any necessary re-submissions thereof.

10.2 The **Contractor** shall not have any right to an extension of time on account of delays due to the **Contractor's** failure to submit requests for the required information or the required approval in accordance with the above requirements.

ARTICLE 11. NOTICE OF CONDITIONS CAUSING DELAY AND DOCUMENTATION OF DAMAGES CAUSED BY DELAY

11.1 After the commencement of any condition which is causing or may cause a delay in completion of the **Work**, including conditions for which the **Contractor** may be entitled to an extension of time, the following notifications and submittals are required:

11.1.1 Within seven (7) **Days** after the commencement of such condition, the **Contractor** must notify the **Engineer** in writing of the existence, nature and effect of such condition upon the approved progress schedule and the **Work**, and must state why and in what respects, if any, the condition is causing or may cause a delay.

11.1.2 If the **Contractor** shall claim to be sustaining damages for delay as provided for in this Article 11, within forty-five (45) **Days** from the time such damages are first incurred, and every thirty (30) **Days** thereafter for as long as such damages are being incurred, the **Contractor** shall submit to the **Commissioner** verified written statements of the details and the amounts of such damages, together with documentary evidence of such damages, ("statement of delay damages") as further detailed in Article 11.6. The **Contractor** may submit any of the above statements within such additional time as may be granted by the **Commissioner** in writing upon written request therefor. On failure of the **Contractor** to strictly comply with all of the foregoing provisions, such claims shall be deemed waived and no right to recover on such claims shall exist. Damages that the **Contractor** may claim in any action arising under or by reason of this **Contract** shall not be different from or in excess of the statements made and documentation provided pursuant to this Article 11.

11.1.3 Within 60 days of submission of the final verified statement of claims pursuant to Article 44, the **Commissioner** shall make a determination as to whether a compensable delay has occurred and, if so, the amount of compensation due the **Contractor**. Notwithstanding the above, the **Commissioner** may make a determination as to whether a compensable delay has occurred at any time after the **Contractor's** first submission of a statement of delay damages provided, however, that the amount of compensation due to the **Contractor** will not be determined until the **Commissioner** determines that the **Work** is delayed after the date set for substantial completion.

11.2 Failure of the **Contractor** to strictly comply with the requirements of Article 11.1.1 may, in the discretion of the **Commissioner**, be deemed sufficient cause to deny any extension of time on account of delay arising out of such condition. Failure of the **Contractor** to strictly comply with the requirements of Articles 11.1.1 and 11.1.2 shall be deemed a conclusive waiver by the **Contractor** of any and all claims for damages for delay arising from such condition and no right to recover on such claims shall exist.

11.3 When appropriate and directed by the **Engineer**, the progress schedule shall be revised by the **Contractor** until finally approved by the **Engineer**. The revised progress schedule must be strictly adhered to by the **Contractor**.

11.4 Compensable Delays

11.4.1 The **Contractor** agrees to make claim only for additional costs attributable to delay in the performance of this **Contract** necessarily extending the time for completion of the **Work** or resulting from acceleration directed by the **Commissioner** and required to maintain the **Project** schedule, occasioned solely by any act or omission to act of the **City** listed below. The **Contractor** also agrees that delay from any other cause shall be compensated, if at all, solely by an extension of time to complete the performance of the **Work**.

11.4.1.1 The failure of the **City** to take reasonable measures to coordinate and progress the **Work**, except that the City shall not be responsible for the **Contractor's** obligation to coordinate and progress the **Work** of its **Subcontractors**.

11.4.1.2 Extended delays attributable to the **City** in the review or issuance of change orders, in shop drawing reviews and approvals or as a result of the cumulative impact of multiple change orders, which have a verifiable impact on **Project** costs.

11.4.1.3 The unavailability of the **Site** for an extended period of time that significantly affects the scheduled completion of the **Contract**.

11.4.1.4 The issuance by the **Engineer** of a stop work order relative to a substantial portion of the **Work** for a period exceeding thirty (30) **Days**, that was not brought about through any action or omission of the **Contractor**.

11.4.1.5 Differing site conditions that were neither known nor reasonably ascertainable on a pre-bid inspection of the **Site** or review of the bid documents or other publicly available sources, and that are not ordinarily encountered in the **Project's** geographical area or neighborhood or in the type of **Work** to be performed.

11.4.1.6 Delays caused by the **City's** bad faith or its willful, malicious, or grossly negligent conduct;

11.4.1.7 Delays not contemplated by the parties;

11.4.1.8 Delays so unreasonable that they constitute an intentional abandonment of the **Contract** by the **City**; and

11.4.1.9 Delays resulting from the **City's** breach of a fundamental obligation of the **Contract**.

11.4.2 No claim may be made for any alleged delay in **Substantial Completion** of the **Work** by a date earlier than the date of **Substantial Completion** provided for in Schedule A unless there is a provision in the **Contract** providing for additional compensation for early completion. No claim may be made for any alleged delay in **Substantial Completion** of the **Work** if the work is substantially completed by the date of **Substantial Completion** provided for in Schedule A unless acceleration has been directed by the **Commissioner** to meet the date of **Substantial Completion** set forth in Schedule A.

11.4.3 The provisions of this Article 11 apply only to claims for additional costs attributable to delay and do not preclude determinations by the **Commissioner** allowing reimbursements for additional costs for **Extra Work** pursuant to Articles 25 and 26 of this **Contract**. To the extent that any cost attributable to delay is reimbursed as part of a change order, no additional claim for compensation under this Article 11 shall be allowed.

11.5 Non-Compensable Delays. The **Contractor** agrees to make no claim for, and is deemed to have included in its bid prices for the various items of the **Contract**, the extra/additional costs attributable to any delays caused by or attributable to the items set forth below. For such items, the **Contractor** shall be compensated, if at all, solely by an extension of time to complete the performance of the **Work**, in accordance with the provisions of Article 13. Such extensions of time will be granted, if at all, pursuant to the grounds set forth in Article 13.3.

11.5.1 The acts or omissions of any third parties, including but not limited to **Other Contractors**, public/ governmental bodies (other than **City Agencies**), utilities or private enterprises, who are disclosed in the **Contract Documents** or are ordinarily encountered or generally recognized as related to the **Work**;

11.5.2 Any situation which was within the contemplation of the parties at the time of entering into the **Contract**, including any delay indicated or disclosed in the **Contract Documents** or generally recognized as related to the nature of the **Work**, and/or the existence of any facility or appurtenance owned, operated or maintained by any third party, as indicated or disclosed in the **Contract Documents** or ordinarily encountered or generally recognized as related to the nature of the **Work**;

11.5.3 Restraining orders, injunctions or judgments issued by a court which were caused by a Contractor's submission, action or inaction or by a Contractor's **Means and Methods of**

Construction, or by third parties, unless such order, injunction or judgment was the result of an action or omission by the **City**;

11.5.4 Any labor boycott, strike, picketing, lockout or similar situation;

11.5.5 Any shortages of supplies or materials, or unavailability of equipment, required by the **Contract Work**;

11.5.6 Climatic conditions, storms, floods, droughts, tidal waves, fires, hurricanes, earthquakes, landslides or other catastrophes or acts of God, or acts of war or of the public enemy or terrorist acts, including the **City's** reasonable responses thereto; and

11.5.7 **Extra Work** which does not significantly affect the overall completion of the **Contract**, reasonable delays in the review or issuance of change orders or field orders and/or in shop drawing reviews or approvals.

11.6 Required Content of Submission of Statement of Delay Damages

11.6.1 In the verified written statement of delay damages required by Article 11.1.2, the following information shall be provided by the **Contractor**:

11.6.1.1 For each delay, the start and end dates of the claimed periods of delay and, in addition, a description of the operations that were delayed, an explanation of how they were delayed, and the reasons for the delay, including identifying the applicable act or omission of the City listed in Article 11.4.

11.6.1.2 A detailed factual statement of the claim providing all necessary dates, locations and items of **Work** affected by the claim.

11.6.1.3 The amount of additional compensation sought and a breakdown of that amount into categories as described in Article 26.2, subject to the limitations set forth in Article 11.7.

11.6.1.4 Any additional information requested by the **Commissioner**.

11.7 Recoverable Costs

11.7.1 Delay damages may be recoverable for the following costs actually and necessarily incurred in the performance of the **Work**:

11.7.1.1 Direct labor, including payroll taxes (subject to statutory wage caps) and supplemental benefits, based on time and materials records;

11.7.1.2 Necessary materials (including transportation to the **Site**), based on time and material records;

11.7.1.3 Reasonable rental value of necessary plant and equipment other than small tools, plus fuel/energy costs according to the applicable formula set forth in Articles 26.2.4 and/or 26.2.8, based on time and material records;

11.7.1.4 Insurance and bond costs;

11.7.1.5 Extended field office costs;

11.7.1.6 Extended **Site** overhead; and

11.7.1.7 Extended home office overhead.

11.7.2 Recoverable Subcontractor Costs. When the **Work** is performed by a **Subcontractor**, the **Contractor** may be paid the actual and necessary costs of such subcontracted **Work** as outlined above in Articles 11.7.1.1 through 11.7.1.6, and an

additional overhead of five (5%) percent of the costs outlined in Articles 11.7.1.1 through 11.7.1.3.

11.7.3 Non-Recoverable Costs. The parties agree that the **City** will have no liability for the following items and the **Contractor** agrees it shall make no claim for the following items:

11.7.3.1 Profit, or loss of anticipated or unanticipated profit;

11.7.3.2 Consequential damages, including but not limited to interest on monies in dispute, including interest which is paid on such monies, loss of bonding capacity, bidding opportunities, or interest in investment, or any resulting insolvency;

11.7.3.3 Indirect costs or expenses of any nature;

11.7.3.4 Direct or indirect costs attributable to performance of **Work** where the **Contractor**, because of situations or conditions within its control, has not progressed the **Work** in a satisfactory manner; and

11.7.3.5 Attorneys' fees and dispute and claims preparation expenses.

11.8 Determinations under this Article 11 are not subject to the jurisdiction of the Contract Dispute Resolution Board pursuant to the dispute resolution process set forth in Article 27.

11.9 If the parties agree, pursuant to Article 11.1.3 above, that a compensable delay has occurred and agree on the amount of compensation, payment may be made pursuant to a written change order. Payment pursuant to such change order is subject to pre-audit by the **Engineering Audit Officer,** and may be post-audited by the **Comptroller** and/or the **Agency**.

ARTICLE 12. COORDINATION WITH OTHER CONTRACTORS

12.1 During the progress of the **Work, Other Contractors** may be engaged in performing other work or may be awarded other contracts for additional work on this **Project**. In that event, the **Contractor** shall coordinate the **Work** to be done hereunder with the work of such **Other Contractors** and the **Contractor** shall fully cooperate with such **Other Contractors** and carefully fit its own **Work** to that provided under other contracts as may be directed by the **Engineer**. The **Contractor** shall not commit or permit any act which will interfere with the performance of work by any **Other Contractors**.

12.2 If the **Engineer** determines that the **Contractor** is failing to coordinate its **Work** with the work of **Other Contractors** as the **Engineer** has directed, then the **Commissioner** shall have the right to withhold any payments otherwise due hereunder until the **Contractor** completely complies with the **Engineer's** directions.

12.3 The **Contractor** shall notify the **Engineer** in writing if any **Other Contractor** on this **Project** is failing to coordinate its work with the **Work** of this **Contract**. If the **Engineer** finds such charges to be true, the **Engineer** shall promptly issue such directions to the **Other Contractor** with respect thereto as the situation may require. The **City** shall not, however, be liable for any damages suffered by any **Other Contractor's** failure to coordinate its work with the **Work** of this **Contract** or by reason of the **Other Contractor's** failure to promptly comply with the directions so issued by the **Engineer**, or by reason of any **Other Contractor's** default in performance, it being understood that the **City** does not guarantee the responsibility or continued efficiency of any contractor. The **Contractor** agrees to make no claim against

the **City** for any damages relating to or arising out of any directions issued by the **Engineer** pursuant to this Article 12 (including but not limited to the failure of any **Other Contractor** to comply or promptly comply with such directions), or the failure of the **Engineer** to issue any directions, or the failure of any **Other Contractor** to coordinate its work, or the default in performance of any **Other Contractor**.

12.4 The **Contractor** shall indemnify and hold the **City** harmless from any and all claims or judgments for damages and from costs and expenses to which the **City** may be subjected or which it may suffer or incur by reason of the **Contractor's** failure to comply with the **Engineer's** directions promptly; and the **Comptroller** shall have the right to exercise the powers reserved in Article 23 with respect to any claims which may be made for damages due to the **Contractor's** failure to comply with the **Engineer's** directions promptly. Insofar as the facts and **Law** relating to any claim would preclude the **City** from being completely indemnified by the **Contractor**, the **City** shall be partially indemnified by the **Contractor** to the fullest extent provided by **Law**.

12.5 Should the **Contractor** sustain any damage through any act or omission of any **Other Contractor** having a contract with the **City** for the performance of work upon the **Site** or of work which may be necessary to be performed for the proper prosecution of the **Work** to be performed hereunder, or through any act or omission of a subcontractor of such **Other Contractor**, the **Contractor** shall have no claim against the **City** for such damage, but shall have a right to recover such damage from the **Other Contractor** under the provision similar to the following provisions which apply to this **Contract** and have been or will be inserted in the contracts with such **Other Contractors**:

> 12.5.1 Should any **Other Contractor** having or who shall hereafter have a contract with the **City** for the performance of work upon the **Site** sustain any damage through any act or omission of the **Contractor** hereunder or through any act or omission of any **Subcontractor** of the **Contractor**, the **Contractor** agrees to reimburse such **Other Contractor** for all such damages and to defend at its own expense any action based upon such claim and if any judgment or claim (even if the allegations of the action are without merit) against the **City** shall be allowed the **Contractor** shall pay or satisfy such judgment or claim and pay all costs and expenses in connection therewith and agrees to indemnify and hold the **City** harmless from all such claims. Insofar as the facts and **Law** relating to any claim would preclude the **City** from being completely indemnified by the **Contractor**, the **City** shall be partially indemnified by the **Contractor** to the fullest extent provided by **Law**.

12.6 The **City's** right to indemnification hereunder shall in no way be diminished, waived or discharged by its recourse to assessment of liquidated damages as provided in Article 15, or by the exercise of any other remedy provided for by **Contract** or by **Law**.

ARTICLE 13. EXTENSION OF TIME FOR PERFORMANCE

13.1 If performance by the **Contractor** is delayed for a reason set forth in Article 13.3, the **Contractor** may be allowed a reasonable extension of time in conformance with this Article 13 and the **PPB** Rules.

13.2 Any extension of time may be granted only by the **ACCO** or by the Board for the Extension of Time (hereafter "Board") (as set forth below) upon written application by the **Contractor**.

13.3 Grounds for Extension: If such application is made, the **Contractor** shall be entitled to an extension of time for delay in completion of the **Work** caused solely:

> 13.3.1 By the acts or omissions of the **City**, its officials, agents or employees; or

13.3.2 By the act or omissions of **Other Contractors** on this **Project**; or

13.3.3 By supervening conditions entirely beyond the control of either party hereto (such as, but not limited to, acts of God or the public enemy, excessive inclement weather, war or other national emergency making performance temporarily impossible or illegal, or strikes or labor disputes not brought about by any act or omission of the **Contractor**).

13.3.4 The **Contractor** shall, however, be entitled to an extension of time for such causes only for the number of **Days** of delay which the **ACCO** or the Board may determine to be due solely to such causes, and then only if the **Contractor** shall have strictly complied with all of the requirements of Articles 9 and 10.

13.4 The **Contractor** shall not be entitled to receive a separate extension of time for each of several causes of delay operating concurrently, but, if at all, only for the actual period of delay in completion of the **Work** as determined by the **ACCO** or the Board, irrespective of the number of causes contributing to produce such delay. If one of several causes of delay operating concurrently results from any act, fault or omission of the **Contractor** or of its **Subcontractors** or **Materialmen**, and would of itself (irrespective of the concurrent causes) have delayed the **Work**, no extension of time will be allowed for the period of delay resulting from such act, fault or omission.

13.5 The determination made by the **ACCO** or the Board on an application for an extension of time shall be binding and conclusive on the **Contractor**.

13.6 The **ACCO** or the Board acting entirely within their discretion may grant an application for an extension of time for causes of delay other than those herein referred.

13.7 Permitting the **Contractor** to continue with the **Work** after the time fixed for its completion has expired, or after the time to which such completion may have been extended has expired, or the making of any payment to the **Contractor** after such time, shall in no way operate as a waiver on the part of the **City** of any of its rights under this **Contract**.

13.8 Application for Extension of Time:

13.8.1 Before the **Contractor's** time extension request will be considered, the **Contractor** shall notify the **ACCO** of the condition which allegedly has caused or is causing the delay, and shall submit a written application to the **ACCO** identifying:

13.8.1(a) The **Contractor**; the registration number; and **Project** description;

13.8.1(b) Liquidated damage assessment rate, as specified in the **Contract**;

13.8.1(c) Original total bid price;

13.8.1(d) The original **Contract** start date and completion date;

13.8.1(e) Any previous time extensions granted (number and duration); and

13.8.1(f) The extension of time requested.

13.8.2 In addition, the application for extension of time shall set forth in detail:

13.8.2(a) The nature of each alleged cause of delay in completing the **Work**;

13.8.2(b) The date upon which each such cause of delay began and ended and the number of **Days** attributable to each such cause;

13.8.2(c) A statement that the **Contractor** waives all claims except for those delineated in the application, and the particulars of any claims which the **Contractor** does not agree to waive. For time extensions for **Substantial Completion** and final completion payments, the application shall include a detailed statement of the dollar amounts of each element of claim item reserved; and

13.8.2(d) A statement indicating the **Contractor's** understanding that the time extension is granted only for purposes of permitting continuation of **Contract** performance and payment for **Work** performed and that the **City** retains its right to conduct an investigation and assess liquidated damages as appropriate in the future.

13.9 Analysis and Approval of Time Extensions:

13.9.1 For time extensions for partial payments, a written determination shall be made by the **ACCO** who may, for good and sufficient cause, extend the time for the performance of the **Contract** as follows:

13.9.1(a) If the **Work** is to be completed within six (6) months, the time for performance may be extended for sixty (60) **Days**;

13.9.1(b) If the **Work** is to be completed within less than one (1) year but more than six (6) months, an extension of ninety (90) **Days** may be granted;

13.9.1(c) If the **Contract** period exceeds one (1) year, besides the extension granted in Article 13.9.1(b), an additional thirty (30) **Days** may be granted for each multiple of six (6) months involved beyond the one (1) year period; or

13.9.1(d) If exceptional circumstances exist, the **ACCO** may extend the time for performance beyond the extensions in Articles 13.9.1(a), 13.9.1(b), and 13.9.1(c). In that event, the **ACCO** shall file with the Mayor's Office of Contract Services a written explanation of the exceptional circumstances.

13.9.2 For extensions of time for **Substantial Completion** and final completion payments, the **Engineer**, in consultation with the **ACCO**, shall prepare a written analysis of the delay (including a preliminary determination of the causes of delay, the beginning and end dates for each such cause of delay, and whether the delays are excusable under the terms of this **Contract**). The report shall be subject to review by and approval of the Board, which shall have authority to question its analysis and determinations and request additional facts or documentation. The report as reviewed and made final by the Board shall be made a part of the **Agency** contract file. Neither the report itself nor anything contained therein shall operate as a waiver or release of any claim the **City** may have against the **Contractor** for either actual or liquidated damages.

13.9.3 Approval Mechanism for Time Extensions for **Substantial Completion** or Final Completion Payments: An extension shall be granted only with the approval of the Board which is comprised of the **ACCO** of the **Agency**, the **City** Corporation Counsel, and the **Comptroller**, or their authorized representatives.

13.9.4 Neither the granting of any application for an extension of time to the **Contractor** or any **Other Contractor** on this **Project** nor the papers, records or reports related to any application for or grant of an extension of time or determination related thereto shall be referred to or offered in evidence by the **Contractor** or its attorneys in any action or proceeding.

13.10 No Damage for Delay: The **Contractor** agrees to make no claim for damages for delay in the performance of this **Contract** occasioned by any act or omission to act of the **City** or any of its representatives, except as provided for in Article 11.

ARTICLE 14. COMPLETION AND FINAL ACCEPTANCE OF THE WORK

14.1 Date for **Substantial Completion:** The **Contractor** shall substantially complete the **Work** within the time fixed in Schedule A of the General Conditions, or within the time to which such **Substantial Completion** may be extended.

14.2 Determining the Date of **Substantial Completion**: The **Work** will be deemed to be substantially complete when the two conditions set forth below have been met.

14.2.1 Inspection: The **Engineer** has inspected the **Work** and has made a written determination that it is substantially complete.

14.2.2 Approval of **Final Approved Punch List** and Date for **Final Acceptance**: Following inspection of the **Work**, the **Engineer** shall furnish the **Contractor** with a final punch list, specifying all items of **Work** to be completed and proposing dates for the completion of each specified item of **Work**. The **Contractor** shall then submit in writing to the **Engineer** within ten (10) **Days** of the **Engineer** furnishing the final punch list either acceptance of the dates or proposed alternative dates for the completion of each specified item of **Work**. If the **Contractor** proposes alternative dates, then, within a reasonable time after receipt, the **Engineer**, in a written notification to the **Contractor**, shall approve the **Contractor's** completion dates or, if they are unable to agree, the Engineer shall establish dates for the completion of each item of **Work**. If the **Contractor** neither accepts the dates nor proposes alternative dates within ten (10) **Days**, the schedule proposed by the **Engineer** shall be deemed accepted. The latest completion date specified shall be the date for **Final Acceptance** of the **Work**.

14.3 Date of **Substantial Completion**. The date of approval of the **Final Approved Punch List**, shall be the date of **Substantial Completion**. The date of approval of the **Final Approved Punch List** shall be either (a) if the **Contractor** approves the final punch list and proposed dates for completion furnished by the **Engineer**, the date of the **Contractor**'s approval; or (b) if the **Contractor** neither accepts the dates nor proposes alternative dates, ten (10) **Days** after the **Engineer** furnishes the **Contractor** with a final punch list and proposed dates for completion; or (c) if the **Contractor** proposes alternative dates, the date that the **Engineer** sends written notification to the **Contractor** either approving the **Contractor**'s proposed alternative dates or establishing dates for the completion for each item of **Work**.

14.4 Determining the Date of **Final Acceptance**: The **Work** will be accepted as final and complete as of the date of the **Engineer's** inspection if, upon such inspection, the **Engineer** finds that all items on the **Final Approved Punch List** are complete and no further **Work** remains to be done. The **Commissioner** will then issue a written determination of **Final Acceptance**.

14.5 Request for Inspection: Inspection of the **Work** by the **Engineer** for the purpose of **Substantial Completion** or **Final Acceptance** shall be made within ten (10) **Days** after receipt of the **Contractor's** written request therefor.

14.6 Request for Re-inspection: If upon inspection for the purpose of **Substantial Completion** or **Final Acceptance**, the **Engineer** determines that there are items of **Work** still to be performed, the **Contractor** shall promptly perform them and then request a re-inspection. If upon re-inspection, the **Engineer** determines that the **Work** is substantially complete or finally accepted, the date of such re-inspection shall be the date of **Substantial Completion** or **Final Acceptance**. Re-inspection by the **Engineer** shall be made within ten (10) **Days** after receipt of the **Contractor's** written request therefor.

14.7 Initiation of Inspection by the **Engineer**: If the **Contractor** does not request inspection or re-inspection of the **Work** for the purpose of **Substantial Completion** or **Final Acceptance**, the **Engineer** may initiate such inspection or re-inspection.

ARTICLE 15. LIQUIDATED DAMAGES

15.1 In the event the **Contractor** fails to substantially complete the **Work** within the time fixed for such **Substantial Completion** in Schedule A of the General Conditions, plus authorized time extensions, or if the **Contractor**, in the sole determination of the **Commissioner**, has abandoned the **Work**, the **Contractor** shall pay to the **City** the sum fixed in Schedule A of the General Conditions, for each and every **Day** that the time consumed in substantially completing the **Work** exceeds the time allowed therefor; which said sum, in view of the difficulty of accurately ascertaining the loss which the **City** will suffer by reason of delay in the **Substantial Completion** of the **Work** hereunder, is hereby fixed and agreed as the liquidated damages that the **City** will suffer by reason of such delay, and not as a penalty. This Article 15 shall also apply to the **Contractor** whether or not the **Contractor** is defaulted pursuant to Chapter X of this **Contract**. Neither the failure to assess liquidated damages nor the granting of any time extension shall operate as a waiver or release of any claim the **City** may have against the **Contractor** for either actual or liquidated damages.

15.2 Liquidated damages received hereunder are not intended to be nor shall they be treated as either a partial or full waiver or discharge of the **City's** right to indemnification, or the **Contractor's** obligation to indemnify the **City**, or to any other remedy provided for in this **Contract** or by **Law**.

15.3 The **Commissioner** may deduct and retain out of the monies which may become due hereunder, the amount of any such liquidated damages; and in case the amount which may become due hereunder shall be less than the amount of liquidated damages suffered by the **City**, the **Contractor** shall be liable to pay the difference.

ARTICLE 16. OCCUPATION OR USE PRIOR TO COMPLETION

16.1 Unless otherwise provided for in the **Specifications**, the **Commissioner** may take over, use, occupy or operate any part of the **Work** at any time prior to **Final Acceptance**, upon written notification to the **Contractor**. The **Engineer** shall inspect the part of the **Work** to be taken over, used, occupied, or operated, and will furnish the **Contractor** with a written statement of the **Work**, if any, which remains to be performed on such part. The **Contractor** shall not object to, nor interfere with, the **Commissioner's** decision to exercise the rights granted by Article 16. In the event the **Commissioner** takes over, uses, occupies, or operates any part of the **Work:**

16.1.1 the **Engineer** shall issue a written determination of **Substantial Completion** with respect to such part of the **Work**;

16.1.2 the **Contractor** shall be relieved of its absolute obligation to protect such part of the unfinished **Work** in accordance with Article 7;

16.1.3 the **Contractor's** guarantee on such part of the **Work** shall begin on the date of such use by the **City**; and;

16.1.4 the **Contractor** shall be entitled to a return of so much of the amount retained in accordance with Article 21 as it relates to such part of the **Work**, except so much thereof as may be retained under Articles 24 and 44.

CHAPTER IV
SUBCONTRACTS AND ASSIGNMENTS

ARTICLE 17. SUBCONTRACTS

17.1 The **Contractor** shall not make subcontracts totaling an amount more than the percentage of the total **Contract** price fixed in Schedule A of the General Conditions, without prior written permission from the **Commissioner**. All subcontracts made by the **Contractor** shall be in writing. No **Work** may be performed by a **Subcontractor** prior to the **Contractor** entering into a written subcontract with the **Subcontractor** and complying with the provisions of this Article 17.

17.2 Before making any subcontracts, the **Contractor** shall submit a written statement to the **Commissioner** giving the name and address of the proposed **Subcontractor**; the portion of the **Work** and materials which it is to perform and furnish; the cost of the subcontract; the VENDEX questionnaire if required; the proposed subcontract if requested by the **Commissioner**; and any other information tending to prove that the proposed **Subcontractor** has the necessary facilities, skill, integrity, past experience, and financial resources to perform the **Work** in accordance with the terms and conditions of this **Contract**.

17.3 In addition to the requirements in Article 17.2, **Contractor** is required to list the **Subcontractor** in the web based Subcontractor Reporting System through the City's Payee Information Portal (PIP), available at www.nyc.gov/pip.[1] For each **Subcontractor** listed, **Contractor** is required to provide the following information: maximum contract value, description of **Subcontractor's** Work, start and end date of the subcontract and identification of the **Subcontractor**'s industry. Thereafter, **Contractor** will be required to report in the system the payments made to each **Subcontractor** within 30 days of making the payment. If any of the required information changes throughout the Term of the **Contract**, **Contractor** will be required to revise the information in the system.

Failure of the **Contractor** to list a **Subcontractor** and/or to report **Subcontractor** payments in a timely fashion may result in the **Commissioner** declaring the **Contractor** in default of the **Contract** and will subject **Contractor** to liquidated damages in the amount of $100 per day for each day that the **Contractor** fails to identify a **Subcontractor** along with the required information about the **Subcontractor** and/or fails to report payments to a **Subcontractor**, beyond the time frames set forth herein or in the notice from the **City**. Article 15 shall govern the issue of liquidated damages.

---

[1] In order to use the new system, a PIP account will be required. Detailed instructions on creating a PIP account and using the new system are also available at www.nyc.gov/pip. Additional assistance with PIP may be obtained by emailing the Financial Information Services Agency Help Desk at pip@fisa.nyc.gov.

17.4 If an approved **Subcontractor** elects to subcontract any portion of its subcontract, the proposed sub-subcontract shall be submitted in the same manner as directed above.

17.5 The **Commissioner** will notify the **Contractor** in writing whether the proposed **Subcontractor** is approved. If the proposed **Subcontractor** is not approved, the **Contractor** may submit another proposed **Subcontractor** unless the **Contractor** decides to do the **Work**. No **Subcontractor** shall be permitted to enter or perform any work on the **Site** unless approved.

17.6 Before entering into any subcontract hereunder, the **Contractor** shall provide the proposed **Subcontractor** with a complete copy of this document and inform the proposed **Subcontractor** fully and completely of all provisions and requirements of this **Contract** relating either directly or indirectly to the **Work** to be performed and the materials to be furnished under such subcontract, and every such **Subcontractor** shall expressly stipulate that all labor performed and materials furnished by the **Subcontractor** shall strictly comply with the requirements of this **Contract**.

17.7 Documents given to a prospective **Subcontractor** for the purpose of soliciting the **Subcontractor's** bid shall include either a copy of the bid cover or a separate information sheet setting forth the **Project** name, the **Contract** number (if available), the **Agency** (as noted in Article 2.1.6), and the **Project's** location.

17.8 The **Commissioner's** approval of a **Subcontractor** shall not relieve the **Contractor** of any of its responsibilities, duties, and liabilities hereunder. The **Contractor** shall be solely responsible to the **City** for the acts or defaults of its **Subcontractor** and of such **Subcontractor's** officers, agents, and employees, each of whom shall, for this purpose, be deemed to be the agent or employee of the **Contractor** to the extent of its subcontract.

17.9 If the **Subcontractor** fails to maintain the necessary facilities, skill, integrity, past experience, and financial resources (other than due to the **Contractor's** failure to make payments where required) to perform the **Work** in accordance with the terms and conditions of this **Contract**, the **Contractor** shall promptly notify the **Commissioner** and replace such **Subcontractor** with a newly approved **Subcontractor** in accordance with this Article 17.

17.10 The **Contractor** shall be responsible for ensuring that all **Subcontractors** performing **Work** at the **Site** maintain all insurance required by **Law**.

17.11 The **Contractor** shall promptly, upon request, file with the **Engineer** a conformed copy of the subcontract and its cost. The subcontract shall provide the following:

17.11.1 Payment to **Subcontractors**: The agreement between the **Contractor** and its **Subcontractor** shall contain the same terms and conditions as to method of payment for **Work**, labor, and materials, and as to retained percentages, as are contained in this **Contract**.

17.11.2 Prevailing Rate of Wages: The agreement between the **Contractor** and its **Subcontractor** shall include the prevailing wage rates and supplemental benefits to be paid in accordance with Labor Law Section 220.

17.11.3 Section 6-123 of the Administrative Code: Pursuant to the requirements of Section 6-123 of the Administrative Code, every agreement between the **Contractor** and a **Subcontractor** in excess of fifty thousand ($50,000) dollars shall include a provision that the **Subcontractor** shall not engage in any unlawful discriminatory practice as defined in Title VIII of the Administrative Code (Section 8-101 *et seq.*).

17.11.4 All requirements required pursuant to federal and/or state grant agreement(s), if applicable to the **Work**.

17.12 The **Commissioner** may deduct from the amounts certified under this **Contract** to be due to the **Contractor**, the sum or sums due and owing from the **Contractor** to the **Subcontractors** according to the terms of the said subcontracts, and in case of dispute between the **Contractor** and its **Subcontractor**, or **Subcontractors**, as to the amount due and owing, the **Commissioner** may deduct and withhold from the amounts certified under this **Contract** to be due to the **Contractor** such sum or sums as may be claimed by such **Subcontractor**, or **Subcontractors**, in a sworn affidavit, to be due and owing until such time as such claim or claims shall have been finally resolved.

17.13 On contracts where performance bonds and payment bonds are executed, the **Contractor** shall include on each requisition for payment the following data: **Subcontractor's** name, value of the subcontract, total amount previously paid to **Subcontractor** for **Work** previously requisitioned, and the amount, including retainage, to be paid to the **Subcontractor** for **Work** included in the requisition.

17.14 On **Contracts** where performance bonds and payment bonds are not executed, the **Contractor** shall include with each requisition for payment submitted hereunder, a signed statement from each and every **Subcontractor** and/or **Materialman** for whom payment is requested in such requisition. Such signed statement shall be on the letterhead of the **Subcontractor** and/or **Materialman** for whom payment is requested and shall (i) verify that such **Subcontractor** and/or **Materialman** has been paid in full for all **Work** performed and/or material supplied to date, exclusive of any amount retained and any amount included on the current requisition, and (ii) state the total amount of retainage to date, exclusive of any amount retained on the current requisition.

ARTICLE 18. ASSIGNMENTS

18.1 The **Contractor** shall not assign, transfer, convey or otherwise dispose of this **Contract**, or the right to execute it, or the right, title or interest in or to it or any part thereof, or assign, by power of attorney or otherwise any of the monies due or to become due under this **Contract**, unless the previous written consent of the **Commissioner** shall first be obtained thereto, and the giving of any such consent to a particular assignment shall not dispense with the necessity of such consent to any further or other assignments.

18.2 Such assignment, transfer, conveyance or other disposition of this **Contract** shall not be valid until filed in the office of the **Commissioner** and the **Comptroller**, with the written consent of the **Commissioner** endorsed thereon or attached thereto.

18.3 Failure to obtain the previous written consent of the **Commissioner** to such an assignment, transfer, conveyance or other disposition, may result in the revocation and annulment of this **Contract**. The **City** shall thereupon be relieved and discharged from any further liability to the **Contractor**, its assignees, transferees or sublessees, who shall forfeit and lose all monies therefor earned under the **Contract**, except so much as may be required to pay the **Contractor's** employees.

18.4 The provisions of this clause shall not hinder, prevent, or affect an assignment by the **Contractor** for the benefit of its creditors made pursuant to the **Laws** of the State of New York.

18.5 This **Contract** may be assigned by the **City** to any corporation, agency or instrumentality having authority to accept such assignment.

CHAPTER V
CONTRACTOR'S SECURITY AND GUARANTEE

ARTICLE 19. SECURITY DEPOSIT

19.1 If performance and payment bonds are required, the **City** shall retain the bid security to ensure that the successful bidder executes the **Contract** and furnishes the required payment and performance security within ten (10) **Days** after notice of the award of the **Contract**. If the successful bidder fails to execute the **Contract** and furnish the required payment and performance security, the **City** shall retain such bid security as set forth in the Information for Bidders. If the successful bidder executes the **Contract** and furnishes the required payment and performance security, the **City** shall return the bid security within a reasonable time after the furnishing of such bonds and execution of the **Contract** by the **City**.

19.2 If performance and payment bonds are not required, the bid security shall be retained by the **City** as security for the **Contractor**'s faithful performance of the **Contract**. If partial payments are provided, the bid security will be returned to the **Contractor** after the sum retained under Article 21 equals the amount of the bid security, subject to other provisions of this **Contract**. If partial payments are not provided, the bid security will be released when final payment is certified by the **City** for payment.

19.3 If the **Contractor** is declared in default under Article 48 prior to the return of the deposit, or if any claim is made such as referred to in Article 23, the amount of such deposit, or so much thereof as the **Comptroller** may deem necessary, may be retained and then applied by the **Comptroller**:

19.3.1 To compensate the **City** for any expense, loss or damage suffered or incurred by reason of or resulting from such default, including the cost of re-letting and liquidated damages; or

19.3.2 To indemnify the **City** against any and all claims.

ARTICLE 20. PAYMENT GUARANTEE

20.1 On **Contracts** where one hundred (100%) percent performance bonds and payment bonds are executed, this Article 20 does not apply.

20.2 In the event the terms of this **Contract** do not require the **Contractor** to provide a payment bond or where the **Contract** does not requite a payment bond for one hundred (100%) percent of the **Contract** price, the **City** shall, in accordance with the terms of this Article 20, guarantee payment of all lawful claims for:

20.2.1 Wages and compensation for labor performed and/or services rendered; and

20.2.2 Materials, equipment, and supplies provided, whether incorporated into the **Work** or not, when demands have been filed with the **City** as provided hereinafter by any person, firm, or corporation which furnished labor, material, equipment, supplies, or any combination thereof, in connection with the **Work** performed hereunder (hereinafter referred to as the "beneficiary") at the direction of the **City** or the **Contractor**.

20.3 The provisions of Article 20.2 are subject to the following limitations and conditions:

20.3.1 If the **Contractor** provides a payment bond for a value that is less than one hundred (100%) percent of the value of the **Contract Work**, the payment bond provided by the **Contractor** shall be primary (and non-contributing) to the payment guarantee provided under this Article 20.

20.3.2 The guarantee is made for the benefit of all beneficiaries as defined in Article 20.2 provided that those beneficiaries strictly adhere to the terms and conditions of Article 20.3.4 and 20.3.5.

20.3.3 Nothing in this Article 20 shall prevent a beneficiary providing labor, services or material for the **Work** from suing the **Contractor** for any amounts due and owing the beneficiary by the **Contractor**.

20.3.4 Every person who has furnished labor or material, to the **Contractor** or to a **Subcontractor** of the **Contractor**, in the prosecution of the **Work** and who has not been paid in full therefor before the expiration of a period of ninety (90) **Days** after the date on which the last of the labor was performed or material was furnished by him/her for which the claim is made, shall have the right to sue on this payment guarantee in his/her own name for the amount, or the balance thereof, unpaid at the time of commencement of the action; provided, however, that a person having a direct contractual relationship with a **Subcontractor** of the **Contractor** but no contractual relationship express or implied with the **Contractor** shall not have a right of action upon the guarantee unless he/she shall have given written notice to the **Contractor** within one hundred twenty (120) **Days** from the date on which the last of the labor was performed or the last of the material was furnished, for which his/her claim is made, stating with substantial accuracy the amount claimed and the name of the party to whom the material was furnished or for whom the labor was performed. The notice shall be served by delivering the same personally to the **Contractor** or by mailing the same by registered mail, postage prepaid, in an envelope addressed to the **Contractor** at any place where it maintains an office or conducts its business; provided, however, that where such notice is actually received by the **Contractor** by other means, such notice shall be deemed sufficient.

20.3.5 Except as provided in Labor Law Section 220-g, no action on this payment guarantee shall be commenced after the expiration of the one-year limitations period set forth in Section 137(4)(b) of the State Finance Law.

20.3.6 The **Contractor** shall promptly forward to the **City** any notice or demand received pursuant to Article 20.3.4. The **Contractor** shall inform the **City** of any defenses to the notice or demand and shall forward to the **City** any documents the **City** requests concerning the notice or demand.

20.3.7 All demands made against the **City** by a beneficiary of this payment guarantee shall be presented to the **Engineer** along with all written documentation concerning the demand which the **Engineer** deems reasonably appropriate or necessary, which may include, but shall not be limited to: the subcontract; any invoices presented to the **Contractor** for payment; the notarized statement of the beneficiary that the demand is due and payable, that a request for payment has been made of the **Contractor** and that the demand has not been paid by the **Contractor** within the time allowed for such payment by the subcontract; and copies of any correspondence between the beneficiary and the **Contractor** concerning such demand. The **City** shall notify the **Contractor** that a demand has been made. The **Contractor** shall inform the **City** of any defenses to the demand and shall forward to the **City** any documents the **City** requests concerning the demand.

20.3.8 The **City** shall make payment only if, after considering all defenses presented by the **Contractor**, it determines that the payment is due and owing to the beneficiary making the demand.

20.3.9 No beneficiary shall be entitled to interest from the **City**, or to any other costs, including, but not limited to, attorneys' fees, except to the extent required by State Finance Law Section 137.

20.4 Upon the receipt by the **City** of a demand pursuant to this Article 20, the **City** may withhold from any payment otherwise due and owing to the **Contractor** under this **Contract** an amount sufficient to satisfy the demand.

20.4.1 In the event the **City** determines that the demand is valid, the **City** shall notify the **Contractor** of such determination and the amount thereof and direct the **Contractor** to immediately pay such amount to the beneficiary. In the event the **Contractor**, within seven (7) **Days** of receipt of such notification from the **City**, fails to pay the beneficiary, such failure shall constitute an automatic and irrevocable assignment of payment by the **Contractor** to the beneficiary for the amount of the demand determined by the **City** to be valid. The **Contractor**, without further notification or other process, hereby gives its unconditional consent to such assignment of payment to the beneficiary and authorizes the **City**, on its behalf, to take all necessary actions to implement such assignment of payment, including without limitation the execution of any instrument or documentation necessary to effectuate such assignment.

20.4.2In the event that the amount otherwise due and owing to the **Contractor** by the **City** is insufficient to satisfy such demand, the **City** may, at its option, require payment from the **Contractor** of an amount sufficient to cover such demand and exercise any other right to require or recover payment which the **City** may have under **Law** or **Contract**.

20.4.3 In the event the **City** determines that the demand is invalid, any amount withheld pending the **City**'s review of such demand shall be paid to the **Contractor**; provided, however, no lien has been filed. In the event a claim or an action has been filed, the terms and conditions set forth in Article 23 shall apply. In the event a lien has been filed, the parties will be governed by the provisions of the Lien Law of the State of New York.

20.5 The provisions of this Article 20 shall not prevent the **City** and the **Contractor** from resolving disputes in accordance with the **PPB** Rules, where applicable.

20.6 In the event the **City** determines that the beneficiary is entitled to payment pursuant to this Article 20, such determination and any defenses and counterclaims raised by the **Contractor** shall be taken into account in evaluating the **Contractor's** performance.

20.7 Nothing in this Article 20 shall relieve the **Contractor** of the obligation to pay the claims of all persons with valid and lawful claims against the **Contractor** relating to the **Work**.

20.8 The **Contractor** shall not require any performance, payment or other bonds of any **Subcontractor** if this **Contract** does not require such bonds of the **Contractor**.

20.9 The payment guarantee made pursuant to this Article 20 shall be construed in a manner consistent with Section 137 of the State Finance Law and shall afford to persons furnishing labor or materials to the **Contractor** or its **Subcontractors** in the prosecution of the **Work** under this **Contract** all of the rights and remedies afforded to such persons by such section, including but not limited to, the right

to commence an action against the **City** on the payment guarantee provided by this Article 20 within the one-year limitations period set forth in Section 137(4)(b).

ARTICLE 21. RETAINED PERCENTAGE

21.1 If this **Contract** requires one hundred (100%) percent performance and payment security, then as further security for the faithful performance of this **Contract**, the **Commissioner** shall deduct, and retain until the substantial completion of the **Work**, five (5%) percent of the value of **Work** certified for payment in each partial payment voucher.

21.2 If this **Contract** does not require one hundred (100%) percent performance and payment security and if the price for which this **Contract** was awarded does not exceed one million ($1,000,000) dollars, then as further security for the faithful performance of this **Contract**, the **Commissioner** shall deduct, and retain until the substantial completion of the **Work**, five (5%) percent of the value of **Work** certified for payment in each partial payment voucher.

21.3 If this **Contract** does not require one hundred (100%) percent performance and payment security and if the price for which this **Contract** was awarded exceeds one million ($1,000,000) dollars, then as further security for the faithful performance of this **Contract,** the **Commissioner** shall deduct, and retain until the substantial completion of the **Work**, up to ten (10%) percent of the value of **Work** certified for payment in each partial payment voucher. The percentage to be retained is set forth in Schedule A of the General Conditions.

ARTICLE 22. INSURANCE

22.1 Types of Insurance: The **Contractor** shall procure and maintain the following types of insurance if, and as indicated, in Schedule A of the General Conditions (with the minimum limits and special conditions specified in Schedule A). Such insurance shall be maintained from the date the **Contractor** is required to provide Proof of Insurance pursuant to Article 22.3.1 through the date of completion of all required **Work** (including punch list work as certified in writing by the **Resident Engineer**), except for insurance required pursuant to Article 22.1.4, which may terminate upon **Substantial Completion** of the **Contract**. All insurance shall meet the requirements set forth in this Article 22. Wherever this Article requires that insurance coverage be "at least as broad" as a specified form (including all ISO forms), there is no obligation that the form itself be used, provided that the **Contractor** can demonstrate that the alternative form or endorsement contained in its policy provides coverage at least as broad as the specified form.

22.1.1 Commercial General Liability Insurance: The **Contractor** shall provide Commercial General Liability Insurance covering claims for property damage and/or bodily injury, including death, which may arise from any of the operations under this **Contract**. Coverage under this insurance shall be at least as broad as that provided by the latest edition of Insurance Services Office ("ISO") Form CG 0001. Such insurance shall be "occurrence" based rather than "claims-made" and include, without limitation, the following types of coverage: premises operations; products and completed operations; contractual liability (including the tort liability of another assumed in a contract); broad form property damage; independent contractors; explosion, collapse and underground (XCU); construction means and methods; and incidental malpractice. Such insurance shall contain a "per project" aggregate limit, as specified in Schedule A, that applies separately to operations under this **Contract**.

22.1.1(a) Such Commercial General Liability Insurance shall name the **City** as an Additional Insured. Coverage for the City shall specifically include the **City's** officials and employees, be at least as broad as the latest edition of ISO Form CG 20 10 and provide completed operations coverage at least as broad as the latest edition of ISO Form CG 20 37.

22.1.1(b) Such Commercial General Liability Insurance shall name all other entities designated as additional insureds in Schedule A but only for claims arising from the **Contractor's** operations under this **Contract,** with coverage at least as broad as the latest edition of ISO Form CG 20 26.

22.1.1(c) If the **Work** requires a permit from the Department of Buildings pursuant to 1 RCNY Section 101-08, at http://www.nyc.gov/html/dob/downloads/rules/1_RCNY_101-08.pdf, the **Contractor** shall provide Commercial General Liability Insurance with limits of at least those required by 1 RCNY section 101-08. If the **Work** does not require such a permit, the minimum limits shall be those provided for in Schedule A.

22.1.1(d) If any of the **Work** includes repair of a waterborne vessel owned by or to be delivered to the **City**, such Commercial General Liability shall include, or be endorsed to include, Ship Repairer's Legal Liability Coverage to protect against, without limitation, liability arising from navigation of such vessels prior to delivery to and acceptance by the **City**.

22.1.2 Workers' Compensation Insurance, Employers' Liability Insurance, and Disability Benefits Insurance: The **Contractor** shall provide, and shall cause its **Subcontractors** to provide, Workers Compensation Insurance, Employers' Liability Insurance, and Disability Benefits Insurance in accordance with the **Laws** of the State of New York on behalf of all employees providing services under this **Contract** (except for those employees, if any, for which the **Laws** require insurance only pursuant to Article 22.1.3).

22.1.3 United States Longshoremen's and Harbor Workers Act and/or Jones Act Insurance: If specified in Schedule A of the General Conditions or if required by **Law**, the **Contractor** shall provide insurance in accordance with the United States Longshoremen's and Harbor Workers Act and/or the Jones Act, on behalf of all qualifying employees providing services under this **Contract**.

22.1.4 Builders Risk Insurance: If specified in Schedule A of the General Conditions, the **Contractor** shall provide Builders Risk Insurance on a completed value form for the total value of the **Work** through **Substantial Completion** of the **Work** in its entirety. Such insurance shall be provided on an All Risk basis and include coverage, without limitation, for windstorm (including named windstorm), storm surge, flood and earth movement. Unless waived by the **Commissioner**, it shall include coverage for ordinance and law, demolition and increased costs of construction, debris removal, pollutant clean up and removal, and expediting costs. Such insurance shall cover, without limitation, (a) all buildings and/or structures involved in the **Work**, as well as temporary structures at the **Site**, and (b) any property that is intended to become a permanent part of such building or structure, whether such property is on the **Site**, in transit or in temporary storage. Policies shall name the **Contractor** as Named Insured and list the **City** as both an Additional Insured and a Loss Payee as its interest may appear.

22.1.4(a) Policies of such insurance shall specify that, in the event a loss occurs at an occupied facility, occupancy of such facility is permitted without the consent of the issuing insurance company.

22.1.4(b) Such insurance may be provided through an Installation Floater, at the **Contractor's** option, if it otherwise conforms with the requirements of this Article 22.1.4.

22.1.5 Commercial Automobile Liability Insurance: The **Contractor** shall provide Commercial Automobile Liability Insurance for liability arising out of ownership, maintenance or use of any owned (if any), non-owned and hired vehicles to be used in connection with this **Contract**. Coverage shall be at least as broad as the latest edition of ISO Form CA0001. If vehicles are used for transporting hazardous materials, the Automobile Liability Insurance shall be endorsed to provide pollution liability broadened coverage for covered vehicles (endorsement CA 99 48) as well as proof of MCS 90.

22.1.6 Contractors Pollution Liability Insurance: If specified in Schedule A of the General Conditions, the **Contractor** shall maintain, or cause the **Subcontractor** doing such **Work** to maintain, Contractors Pollution Liability Insurance covering bodily injury and property damage. Such insurance shall provide coverage for actual, alleged or threatened emission, discharge, dispersal, seepage, release or escape of pollutants (including asbestos), including any loss, cost or expense incurred as a result of any cleanup of pollutants (including asbestos) or in the investigation, settlement or defense of any claim, action, or proceedings arising from the operations under this **Contract**. Such insurance shall be in the **Contractor's** name and list the **City** as an Additional Insured and any other entity specified in Schedule A. Coverage shall include, without limitation, (a) loss of use of damaged property or of property that has not been physically injured, (b) transportation, and (c) non-owned disposal sites.

22.1.6(a) Coverage for the **City** as Additional Insured shall specifically include the **City's** officials and employees and be at least as broad as provided to the **Contractor** for this **Project**.

22.1.6(b) If such insurance is written on a claims-made policy, such policy shall have a retroactive date on or before the effective date of this **Contract**, and continuous coverage shall be maintained, or an extended discovery period exercised, for a period of not less than three (3) years from the time the **Work** under this **Contract** is completed.

22.1.7 Marine Insurance:

22.1.7(a) Marine Protection and Indemnity Insurance: If specified in Schedule A of the General Conditions or if the **Contractor** engages in marine operations in the execution of any part of the **Work**, the **Contractor** shall maintain, or cause the **Subcontractor** doing such Work to maintain, Marine Protection and Indemnity Insurance with coverage at least as broad as Form SP-23. The insurance shall provide coverage for the **Contractor** or **Subcontractor** (whichever is doing this **Work**) and for the **City** (together with its officials and employees) and any other entity specified in Schedule A as an Additional Insured for bodily injury and property damage arising from marine operations under this **Contract**. Coverage shall include, without limitation, injury or death of crew members (if not fully provided through other insurance), removal of wreck, damage to piers, wharves and other fixed or floating objects and loss of or damage to any other vessel or craft, or to property on such other vessel or craft.

22.1.7(b) Hull and Machinery Insurance: If specified in Schedule A of the General Conditions or if the **Contractor** engages in marine operations in the execution of any part of the **Work**, the **Contractor** shall maintain, or cause the **Subcontractor** doing such **Work** to maintain, Hull and Machinery Insurance with coverage for the **Contractor** or **Subcontractor** (whichever is doing this Work) and for the **City** (together with its officials and employees) as Additional Insured at least as broad as the latest edition of American Institute Tug Form for all tugs used under this **Contract** and Collision Liability at least as broad as the latest edition of American Institute Hull Clauses.

22.1.7(c) Marine Pollution Liability Insurance: If specified in Schedule A of the General Conditions or if the **Contractor** engages in marine operations in the execution of any part of the **Work**, the **Contractor** shall maintain, or cause the **Subcontractor** doing such Work to maintain, Marine Pollution Liability Insurance covering itself (or the Subcontractor doing such Work) as Named Insured and the **City** (together with its officials and employees) and any other entity specified in Schedule A as an Additional Insured. Coverage shall be at least as broad as that provided by the latest edition of Water Quality Insurance Syndicate Form and include, without limitation, liability arising from the discharge or substantial threat of a discharge of oil, or from the release or threatened release of a hazardous substance including injury to, or economic losses resulting from, the destruction of or damage to real property, personal property or natural resources.

22.1.8 The **Contractor** shall provide such other types of insurance, at such minimum limits and with such conditions, as are specified in Schedule A of the General Conditions.

22.2 General Requirements for Insurance Coverage and Policies:

22.2.1 All required insurance policies shall be maintained with companies that may lawfully issue the required policy and have an A.M. Best rating of at least A-/VII or a Standard and Poor's rating of at least A, unless prior written approval is obtained from the **City** Corporation Counsel.

22.2.2 The **Contractor** shall be solely responsible for the payment of all premiums for all required policies and all deductibles and self-insured retentions to which such policies are subject, whether or not the **City** is an insured under the policy.

22.2.3 In his/her sole discretion, the **Commissioner** may, subject to the approval of the **Comptroller** and the **City** Corporation Counsel, accept Letters of Credit and/or custodial accounts in lieu of required insurance.

22.2.4 The **City's** limits of coverage for all types of insurance required pursuant to Schedule A of the General Conditions shall be the greater of (i) the minimum limits set forth in Schedule A or (ii) the limits provided to the **Contractor** as Named Insured under all primary, excess, and umbrella policies of that type of coverage.

22.2.5 The **Contractor** may satisfy its insurance obligations under this Article 22 through primary policies or a combination of primary and excess/umbrella policies, so long as all policies provide the scope of coverage required herein.

22.2.6 Policies of insurance provided pursuant to this Article 22 shall be primary and non-contributing to any insurance or self-insurance maintained by the **City**.

22.3 Proof of Insurance:

22.3.1 For all types of insurance required by Article 22.1 and Schedule A, except for insurance required by Articles 22.1.4 and 22.1.7, the **Contractor** shall file proof of insurance in accordance with this Article 22.3 within ten (10) **Days** of award. For insurance provided pursuant to Articles 22.1.4 and 22.1.7, proof shall be filed by a date specified by the **Commissioner** or ten (10) **Days** prior to the commencement of the portion of the **Work** covered by such policy, whichever is earlier.

22.3.2 For Workers' Compensation Insurance provided pursuant to Article 22.1.2, the **Contractor** shall submit one of the following forms: C-105.2 Certificate of Workers' Compensation Insurance; U-26.3 - State Insurance Fund Certificate of Workers' Compensation Insurance; Request for WC/DB Exemption (Form CE-200); equivalent or successor forms used by the New York State Workers' Compensation Board; or other proof of insurance in a form acceptable to the **Commissioner**. For Disability Benefits Insurance provided pursuant to Article 22.1.2, the Contractor shall submit DB-120.1 - Certificate Of Insurance Coverage Under The NYS Disability Benefits Law, Request for WC/DB Exemption (Form CE-200); equivalent or successor forms used by the New York State Workers' Compensation Board; or other proof of insurance in a form acceptable to the **Commissioner**. ACORD forms are not acceptable.

22.3.3 For policies provided pursuant to all of Article 22.1 other than Article 22.1.2, the **Contractor** shall submit one or more Certificates of Insurance on forms acceptable to the **Commissioner**. All such Certificates of Insurance shall certify (a) the issuance and effectiveness of such policies of insurance, each with the specified minimum limits (b) for insurance secured pursuant to Article 22.1.1 that the **City** and any other entity specified in Schedule A is an Additional Insured with coverage at least as broad as the most recent edition of ISO Forms CG 20 10, CG 20 37, and CG 20 26, as applicable; (c) in the event insurance is required pursuant to Article 22.1.6 and/or Article 22.1.7, that the City is an Additional Insured thereunder; (d) the company code issued to the insurance company by the National Association of Insurance Commissioners (the NAIC number); and (e) the number assigned to the **Contract** by the **City**. All such Certificates of Insurance shall be accompanied by either a duly executed "Certification by Broker" in the form contained in Part III of Schedule A or copies of all policies referenced in such Certificate of Insurance as certified by an authorized representative of the issuing insurance carrier. If any policy is not available at the time of submission, certified binders may be submitted until such time as the policy is available, at which time a certified copy of the policy shall be submitted.

22.3.4 Documentation confirming renewals of insurance shall be submitted to the **Commissioner** prior to the expiration date of coverage of policies required under this **Contract**. Such proofs of insurance shall comply with the requirements of Articles 22.3.2 and 22.3.3.

22.3.5 The **Contractor** shall be obligated to provide the **City** with a copy of any policy of insurance provided pursuant to this Article 22 upon the demand for such policy by the **Commissioner** or the **City** Corporation Counsel.

22.4 Operations of the **Contractor**:

22.4.1 The **Contractor** shall not commence the **Work** unless and until all required certificates have been submitted to and accepted by the **Commissioner**. Acceptance by the **Commissioner** of a certificate does not excuse the **Contractor** from securing insurance

consistent with all provisions of this Article 22 or of any liability arising from its failure to do so.

22.4.2 The **Contractor** shall be responsible for providing continuous insurance coverage in the manner, form, and limits required by this **Contract** and shall be authorized to perform **Work** only during the effective period of all required coverage.

22.4.3 In the event that any of the required insurance policies lapse, are revoked, suspended or otherwise terminated, for whatever cause, the **Contractor** shall immediately stop all **Work**, and shall not recommence **Work** until authorized in writing to do so by the **Commissioner**. Upon quitting the **Site**, except as otherwise directed by the **Commissioner**, the **Contractor** shall leave all plant, materials, equipment, tools, and supplies on the **Site**. **Contract** time shall continue to run during such periods and no extensions of time will be granted. The **Commissioner** may also declare the **Contractor** in default for failure to maintain required insurance.

22.4.4 In the event the **Contractor** receives notice, from an insurance company or other person, that any insurance policy required under this Article 22 shall be cancelled or terminated (or has been cancelled or terminated) for any reason, the **Contractor** shall immediately forward a copy of such notice to both the **Commissioner** and the New York City Comptroller, attn: Office of Contract Administration, Municipal Building, One Centre Street, room 1005, New York, New York 10007. Notwithstanding the foregoing, the **Contractor** shall ensure that there is no interruption in any of the insurance coverage required under this Article 22.

22.4.5 Where notice of loss, damage, occurrence, accident, claim or suit is required under an insurance policy maintained in accordance with this Article 22, the **Contractor** shall notify in writing all insurance carriers that issued potentially responsive policies of any such event relating to any operations under this **Contract** (including notice to Commercial General Liability insurance carriers for events relating to the **Contractor**'s own employees) no later than 20 days after such event. For any policy where the **City** is an Additional Insured, such notice shall expressly specify that "this notice is being given on behalf of the City of New York as Insured as well as the Named Insured." Such notice shall also contain the following information: the number of the insurance policy, the name of the named insured, the date and location of the damage, occurrence, or accident, and the identity of the persons or things injured, damaged or lost. The **Contractor** shall simultaneously send a copy of such notice to the City of New York c/o Insurance Claims Specialist, Affirmative Litigation Division, New York City Law Department, 100 Church Street, New York, New York 10007.

22.4.6 In the event of any loss, accident, claim, action, or other event that does or can give rise to a claim under any insurance policy required under this Article 22, the **Contractor** shall at all times fully cooperate with the **City** with regard to such potential or actual claim.

22.5 **Subcontractor** Insurance: In the event the **Contractor** requires any **Subcontractor** to procure insurance with regard to any operations under this **Contract** and requires such **Subcontractor** to name the **Contractor** as an **Additional Insured** thereunder, the **Contractor** shall ensure that the **Subcontractor** name the **City**, including its officials and employees, as an Additional Insured with coverage at least as broad as the most recent edition of ISO Form CG 20 26.

22.6 Wherever reference is made in Article 7 or this Article 22 to documents to be sent to the **Commissioner** (e.g., notices, filings, or submissions), such documents shall be sent to the address set forth in Schedule A of the General Conditions. In the event no address is set forth in Schedule A, such documents are to be sent to the **Commissioner's** address as provided elsewhere in this **Contract**.

22.7 Apart from damages or losses covered by insurance provided pursuant to Articles 22.1.2, 22.1.3, or 22.1.5, the **Contractor** waives all rights against the **City**, including its officials and employees, for any damages or losses that are covered under any insurance required under this Article 22 (whether or not such insurance is actually procured or claims are paid thereunder) or any other insurance applicable to the operations of the **Contractor** and/or its employees, agents, or **Subcontractors**.

22.8 In the event the **Contractor** utilizes a self-insurance program to satisfy any of the requirements of this Article 22, the **Contractor** shall ensure that any such self-insurance program provides the **City** with all rights that would be provided by traditional insurance under this Article 22, including but not limited to the defense and indemnification obligations that insurers are required to undertake in liability policies.

22.9 Materiality/Non-Waiver: The **Contractor's** failure to secure policies in complete conformity with this Article 22, or to give an insurance company timely notice of any sort required in this **Contract** or to do anything else required by this Article 22 shall constitute a material breach of this **Contract**. Such breach shall not be waived or otherwise excused by any action or inaction by the **City** at any time.

22.10 Pursuant to General Municipal Law Section 108, this **Contract** shall be void and of no effect unless **Contractor** maintains Workers' Compensation Insurance for the term of this **Contract** to the extent required and in compliance with the New York State Workers' Compensation Law.

22.11 Other Remedies: Insurance coverage provided pursuant to this Article 22 or otherwise shall not relieve the **Contractor** of any liability under this **Contract**, nor shall it preclude the **City** from exercising any rights or taking such other actions available to it under any other provisions of this **Contract** or **Law**.

ARTICLE 23. MONEY RETAINED AGAINST CLAIMS

23.1 If any claim shall be made by any person or entity (including **Other Contractors** with the **City** on this **Project**) against the **City** or against the **Contractor** and the **City** for any of the following:

(a) An alleged loss, damage, injury, theft or vandalism of any of the kinds referred to in Articles 7 and 12, plus the reasonable costs of defending the **City**, which in the opinion of the **Comptroller** may not be paid by an insurance company (for any reason whatsoever); or

(b) An infringement of copyrights, patents or use of patented articles, tools, etc., as referred to in Article 57; or

(c) Damage claimed to have been caused directly or indirectly by the failure of the **Contractor** to perform the **Work** in strict accordance with this **Contract,**

the amount of such claim, or so much thereof as the **Comptroller** may deem necessary, may be withheld by the **Comptroller**, as security against such claim, from any money due hereunder. The **Comptroller**, in his/her discretion, may permit the **Contractor** to substitute other satisfactory security in lieu of the monies so withheld.

23.2 If an action on such claim is timely commenced and the liability of the **City**, or the **Contractor**, or both, shall have been established therein by a final judgment of a court of competent jurisdiction, or if such claim shall have been admitted by the **Contractor** to be valid, the **Comptroller**

shall pay such judgment or admitted claim out of the monies retained by the **Comptroller** under the provisions of this Article 23, and return the balance, if any, without interest, to the **Contractor**.

ARTICLE 24. MAINTENANCE AND GUARANTY

24.1 The **Contractor** shall promptly repair, replace, restore or rebuild, as the **Commissioner** may determine, any finished **Work** in which defects of materials or workmanship may appear or to which damage may occur because of such defects, during the one (1) year period subsequent to the date of **Substantial Completion** (or use and occupancy in accordance with Article 16), except where other periods of maintenance and guaranty are provided for in Schedule A.

24.2 As security for the faithful performance of its obligations hereunder, the **Contractor**, upon filing its requisition for payment on **Substantial Completion**, shall deposit with the **Commissioner** a sum equal to one (1%) percent of the price (or the amount fixed in Schedule A of the General Conditions) in cash or certified check upon a state or national bank and trust company or a check of such bank and trust company signed by a duly authorized officer thereof and drawn to the order of the **Comptroller**, or obligations of the **City**, which the **Comptroller** may approve as of equal value with the sum so required.

24.3 In lieu of the above, the **Contractor** may make such security payment to the **City** by authorizing the **Commissioner** in writing to deduct the amount from the **Substantial Completion** payment which shall be deemed the deposit required above.

24.4 If the **Contractor** has faithfully performed all of its obligations hereunder the **Commissioner** shall so certify to the **Comptroller** within five (5) **Days** after the expiration of one (1) year from the date of **Substantial Completion** and acceptance of the **Work** or within thirty (30) **Days** after the expiration of the guarantee period fixed in the **Specifications**. The security payment shall be repaid to the **Contractor** without interest within thirty (30) **Days** after certification by the **Commissioner** to the **Comptroller** that the **Contractor** has faithfully performed all of its obligations hereunder.

24.5 Notice by the **Commissioner** to the **Contractor** to repair, replace, rebuild or restore such defective or damaged **Work** shall be timely, pursuant to this article, if given not later than ten (10) **Days** subsequent to the expiration of the one (1) year period or other periods provided for herein.

24.6 If the **Contractor** shall fail to repair, replace, rebuild or restore such defective or damaged **Work** promptly after receiving such notice, the **Commissioner** shall have the right to have the **Work** done by others in the same manner as provided for in the completion of a defaulted **Contract**, under Article 51.

24.7 If the security payment so deposited is insufficient to cover the cost of such **Work**, the **Contractor** shall be liable to pay such deficiency on demand by the **Commissioner**.

24.8 The **Engineer's** certificate setting forth the fair and reasonable cost of repairing, replacing, rebuilding or restoring any damaged or defective **Work** when performed by one other than the **Contractor**, shall be binding and conclusive upon the **Contractor** as to the amount thereof.

24.9 The **Contractor** shall obtain all manufacturers' warranties and guaranties of all equipment and materials required by this **Contract** in the name of the **City** and shall deliver same to the **Commissioner**. All of the **City's** rights and title and interest in and to said manufacturers' warranties and guaranties may be assigned by the **City** to any subsequent purchasers of such equipment and materials or lessees of the premises into which the equipment and materials have been installed.

CHAPTER VI
CHANGES, EXTRA WORK, AND DOCUMENTATION OF CLAIM

ARTICLE 25. CHANGES

25.1 Changes may be made to this **Contract** only as duly authorized in writing by the **Commissioner** in accordance with the **Law** and this **Contract**. All such changes, modifications, and amendments will become a part of the **Contract**. **Work** so ordered shall be performed by the **Contractor**.

25.2 **Contract** changes will be made only for **Work** necessary to complete the **Work** included in the original scope of the **Contract** and/or for non-material changes to the scope of the **Contract**. Changes are not permitted for any material alteration in the scope of **Work** in the **Contract**.

25.3 The **Contractor** shall be entitled to a price adjustment for **Extra Work** performed pursuant to a written change order. Adjustments to price shall be computed in one or more of the following ways:

25.3.1 By applicable unit prices specified in the **Contract**; and/or

25.3.2 By agreement of a fixed price; and/or

25.3.3 By time and material records; and/or

25.3.4 In any other manner approved by the **CCPO**.

25.4 All payments for change orders are subject to pre-audit by the **Engineering Audit Officer** and may be post-audited by the **Comptroller** and/or the **Agency**.

ARTICLE 26. METHODS OF PAYMENT FOR OVERRUNS AND EXTRA WORK

26.1 Overrun of Unit Price Item: An overrun is any quantity of a unit price item which the **Contractor** is directed to provide which is in excess of one hundred twenty-five (125%) percent of the estimated quantity for that item set forth in the bid schedule.

26.1.1For any unit price item, the **Contractor** will be paid at the unit price bid for any quantity up to one hundred twenty-five (125%) percent of the estimated quantity for that item set forth in the bid schedule. If during the progress of the **Work**, the actual quantity of any unit price item required to complete the **Work** approaches the estimated quantity for that item, and for any reason it appears that the actual quantity of any unit price item necessary to complete the **Work** will exceed the estimated quantity for that item by twenty-five (25%) percent, the **Contractor** shall immediately notify the **Engineer** of such anticipated overrun. The **Contractor** shall not be compensated for any quantity of a unit price item provided which is in excess of one hundred twenty-five (125%) percent of the estimated quantity for that item set forth in the bid schedule without written authorization from the **Engineer**.

26.1.2If the actual quantity of any unit price item necessary to complete the **Work** will exceed one hundred twenty five (125%) percent of the estimated quantity for that item set forth in the bid schedule, the **City** reserves the right and the **Contractor** agrees to negotiate a new unit price for such item. In no event shall such negotiated new unit price exceed the unit bid price. If the **City** and **Contractor** cannot agree on a new unit price, then the **City** shall order the **Contractor** and the **Contractor** agrees to provide additional quantities of the

item on the basis of time and material records for the actual and reasonable cost as determined under Article 26.2, but in no event at a unit price exceeding the unit price bid.

26.2 **Extra Work:** For **Extra Work** where payment is by agreement on a fixed price in accordance with Article 25.3.2, the price to be paid for such **Extra Work** shall be based on the fair and reasonable estimated cost of the items set forth below. For **Extra Work** where payment is based on time and material records in accordance with Article 25.3.3, the price to be paid for such **Extra Work** shall be the actual and reasonable cost of the items set forth below, calculated in accordance with the formula specified therein, if any.

26.2.1 Necessary materials (including transportation to the **Site**); plus

26.2.2 Necessary direct labor, including payroll taxes (subject to statutory wage caps) and supplemental benefits; plus

26.2.3 Sales and personal property taxes, if any, required to be paid on materials not incorporated into such **Extra Work**; plus

26.2.4 Reasonable rental value of **Contractor**-owned (or **Subcontractor**-owned, as applicable), necessary plant and equipment other than **Small Tools**, plus fuel/energy costs. Except for fuel costs for pick-up trucks which shall be reimbursed based on a consumption of five (5) gallons per shift, fuel costs shall be reimbursed based on actual costs or, in the absence of auditable documentation, the following fuel consumption formula per operating hour: (.035) x (HP rating) x (Fuel cost/gallon). Reasonable rental value is defined as the lower of either seventy-five percent of the monthly prorated rental rates established in "The AED Green Book, Rental Rates and Specifications for Construction Equipment" published by Equipment Watch (the "Green Book"), or seventy-five percent of the monthly prorated rental rates established in the "Rental Rate Blue Book for Construction Equipment" published by Equipment Watch (the "Blue Book") (the applicable Blue Book rate being for rental only without the addition of any operational costs listed in the Blue Book). The reasonable rental value is deemed to be inclusive of all operating costs except for fuel/energy consumption and equipment operator's wages/costs. For multiple shift utilization, reimbursement shall be calculated as follows: first shift shall be seventy-five (75%) percent of such rental rates; second shift shall be sixty (60%) percent of the first shift rate; and third shift shall be forty (40%) percent of the first shift rate. Equipment on standby shall be reimbursed at one-third (1/3) the prorated monthly rental rate. **Contractor**-owned (or **Subcontractor**-owned, as applicable) equipment includes equipment from rental companies affiliated with or controlled by the **Contractor** (or **Subcontractor**, as applicable), as determined by the **Commissioner**. In establishing cost reimbursement for non-operating **Contractor**-owned (or **Subcontractor**-owned, as applicable) equipment (scaffolding, sheeting systems, road plates, etc.), the **City** may restrict reimbursement to a purchase-salvage/life cycle basis if less than the computed rental costs; plus

26.2.5 Necessary installation and dismantling of such plant and equipment, including transportation to and from the **Site**, if any, provided that, in the case of non-**Contractor**-owned (or non-**Subcontractor**-owned, as applicable) equipment rented from a third party, the cost of installation and dismantling are not allowable if such costs are included in the rental rate; plus

26.2.6 Necessary fees charged by governmental entities; plus

26.2.7 Necessary construction-related service fees charged by non-governmental entities, such as landfill tipping fees; plus

26.2.8 Reasonable rental costs of non-**Contractor**-owned (or non-**Subcontractor**-owned, as applicable) necessary plant and equipment other than **Small Tools**, plus fuel/energy costs. Except for fuel costs for pick-up trucks which shall be reimbursed based on a consumption of five (5) gallons per shift, fuel costs shall be reimbursed based on actual costs or, in the absence of auditable documentation, the following fuel consumption formula per hour of operation: (.035) x (HP rating) x (Fuel cost/gallon). In lieu of renting, the **City** reserves the right to direct the purchase of non-operating equipment (scaffolding, sheeting systems, road plates, etc.), with payment on a purchase-salvage/life cycle basis, if less than the projected rental costs; plus

26.2.9 Workers' Compensation Insurance, and any insurance coverage expressly required by the **City** for the performance of the **Extra Work** which is different than the types of insurance required by Article 22 and Schedule A of the General Conditions. The cost of Workers' Compensation Insurance is subject to applicable payroll limitation caps and shall be based upon the carrier's Manual Rate for such insurance derived from the applicable class Loss Cost ("LC") and carrier's Lost Cost Multiplier ("LCM") approved by the New York State Department of Financial Services, and with the exception of experience rating, rate modifiers as promulgated by the New York Compensation Insurance Rating Board ("NYCIRB"); plus

26.2.10 Additional costs incurred as a result of the **Extra Work** for performance and payment bonds; plus

26.2.11 Twelve percent (12%) percent of the total of items in Articles 26.2.1 through 26.2.5 as compensation for overhead, except that no percentage for overhead will be allowed on **Payroll Taxes** or on the premium portion of overtime pay or on sales and personal property taxes. Overhead shall include without limitation, all costs and expenses in connection with administration, management superintendence, small tools, and insurance required by Schedule A of the General Conditions other than Workers' Compensation Insurance; plus

26.2.12 Ten (10%) percent of the total of items in Articles 26.2.1 through 26.2.5, plus the items in Article 26.2.11, as compensation for profit, except that no percentage for profit will be allowed on **Payroll Taxes** or on the premium portion of overtime pay or on sales and personal property taxes; plus

26.2.13 Five (5%) percent of the total of items in Articles 26.2.6 through 26.2.10 as compensation for overhead and profit.

26.3 Where the **Extra Work** is performed in whole or in part by other than the **Contractor's** own forces pursuant to Article 26.2, the **Contractor** shall be paid, subject to pre-audit by the **Engineering Audit Officer**, the cost of such **Work** computed in accordance with Article 26.2 above, plus an additional allowance of five (5%) percent to cover the **Contractor's** overhead and profit.

26.4 Where a change is ordered, involving both **Extra Work** and omitted or reduced **Contract Work**, the **Contract** price shall be adjusted, subject to pre-audit by the **EAO**, in an amount based on the difference between the cost of such **Extra Work** and of the omitted or reduced **Work**.

26.5 Where the **Contractor** and the **Commissioner** can agree upon a fixed price for **Extra Work** in accordance with Article 25.3.2 or another method of payment for **Extra Work** in accordance with Article

25.3.4, or for **Extra Work** ordered in connection with omitted **Work**, such method, subject to pre-audit by the **EAO**, may, at the option of the **Commissioner**, be substituted for the cost plus a percentage method provided in Article 26.2; provided, however, that if the **Extra Work** is performed by a **Subcontractor**, the **Contractor** shall not be entitled to receive more than an additional allowance of five (5%) percent for overhead and profit over the cost of such **Subcontractor's Work** as computed in accordance with Article 26.2.

ARTICLE 27. RESOLUTION OF DISPUTES

27.1 All disputes between the **City** and the **Contractor** of the kind delineated in this Article 27.1 that arise under, or by virtue of, this **Contract** shall be finally resolved in accordance with the provisions of this Article 27 and the **PPB** Rules. This procedure for resolving all disputes of the kind delineated herein shall be the exclusive means of resolving any such disputes.

27.1.1 This Article 27 shall not apply to disputes concerning matters dealt with in other sections of the **PPB** Rules, or to disputes involving patents, copyrights, trademarks, or trade secrets (as interpreted by the courts of New York State) relating to proprietary rights in computer software.

27.1.2 This Article 27 shall apply only to disputes about the scope of **Work** delineated by the **Contract**, the interpretation of **Contract** documents, the amount to be paid for **Extra Work** or disputed work performed in connection with the **Contract**, the conformity of the **Contractor's Work** to the **Contract**, and the acceptability and quality of the **Contractor's Work**; such disputes arise when the **Engineer**, **Resident Engineer**, **Engineering Audit Officer**, or other designee of the **Commissioner** makes a determination with which the **Contractor** disagrees.

27.2 All determinations required by this Article 27 shall be made in writing clearly stated, with a reasoned explanation for the determination based on the information and evidence presented to the party making the determination. Failure to make such determination within the time required by this Article 27 shall be deemed a non-determination without prejudice that will allow application to the next level.

27.3 During such time as any dispute is being presented, heard, and considered pursuant to this Article 27, the **Contract** terms shall remain in force and the **Contractor** shall continue to perform **Work** as directed by the **ACCO** or the **Engineer**. Failure of the **Contractor** to continue **Work** as directed shall constitute a waiver by the **Contractor** of its claim.

27.4 Presentation of Disputes to **Commissioner**.

Notice of Dispute and Agency Response. The **Contractor** shall present its dispute in writing ("Notice of Dispute") to the **Commissioner** within thirty (30) Days of receiving written notice of the determination or action that is the subject of the dispute. This notice requirement shall not be read to replace any other notice requirements contained in the **Contract**. The Notice of Dispute shall include all the facts, evidence, documents, or other basis upon which the **Contractor** relies in support of its position, as well as a detailed computation demonstrating how any amount of money claimed by the **Contractor** in the dispute was arrived at. Within thirty (30) Days after receipt of the detailed written submission comprising the complete Notice of Dispute, the **Engineer**, **Resident Engineer**, **Engineering Audit Officer**, or other designee of the **Commissioner** shall submit to the **Commissioner** all materials he or she deems pertinent to the dispute. Following initial submissions to the **Commissioner**, either party may demand of the other the production of any document or other material the demanding party believes may be relevant to the dispute. The requested party shall produce all relevant materials that are not otherwise

protected by a legal privilege recognized by the courts of New York State. Any question of relevancy shall be determined by the **Commissioner** whose decision shall be final. Willful failure of the **Contractor** to produce any requested material whose relevancy the **Contractor** has not disputed, or whose relevancy has been affirmatively determined, shall constitute a waiver by the **Contractor** of its claim.

27.4.1 **Commissioner** Inquiry. The **Commissioner** shall examine the material and may, in his or her discretion, convene an informal conference with the **Contractor**, the **ACCO**, and the **Engineer**, **Resident Engineer**, **Engineering Audit Officer**, or other designee of the **Commissioner** to resolve the issue by mutual consent prior to reaching a determination. The **Commissioner** may seek such technical or other expertise as he or she shall deem appropriate, including the use of neutral mediators, and require any such additional material from either or both parties as he or she deems fit. The **Commissioner's** ability to render, and the effect of, a decision hereunder shall not be impaired by any negotiations in connection with the dispute presented, whether or not the **Commissioner** participated therein. The **Commissioner** may or, at the request of any party to the dispute, shall compel the participation of any **Other Contractor** with a contract related to the **Work** of this **Contract**, and that **Contractor** shall be bound by the decision of the **Commissioner**. Any **Other Contractor** thus brought into the dispute resolution proceeding shall have the same rights and obligations under this Article 27 as the **Contractor** initiating the dispute.

27.4.2 **Commissioner** Determination. Within thirty (30) **Days** after the receipt of all materials and information, or such longer time as may be agreed to by the parties, the **Commissioner** shall make his or her determination and shall deliver or send a copy of such determination to the **Contractor**, the **ACCO**, and **Engineer**, **Resident Engineer**, **Engineering Audit Officer**, or other designee of the **Commissioner**, as applicable, together with a statement concerning how the decision may be appealed.

27.4.3 Finality of **Commissioner's** Decision. The **Commissioner's** decision shall be final and binding on all parties, unless presented to the Contract Dispute Resolution Board pursuant to this Article 27. The **City** may not take a petition to the Contract Dispute Resolution Board. However, should the **Contractor** take such a petition, the **City** may seek, and the Contract Dispute Resolution Board may render, a determination less favorable to the **Contractor** and more favorable to the **City** than the decision of the **Commissioner**.

27.5 Presentation of Dispute to the **Comptroller**. Before any dispute may be brought by the **Contractor** to the Contract Dispute Resolution Board, the **Contractor** must first present its claim to the **Comptroller** for his or her review, investigation, and possible adjustment.

27.5.1 Time, Form, and Content of Notice. Within thirty (30) **Days** of its receipt of a decision by the **Commissioner**, the **Contractor** shall submit to the **Comptroller** and to the **Commissioner** a Notice of Claim regarding its dispute with the **Agency**. The Notice of Claim shall consist of (i) a brief written statement of the substance of the dispute, the amount of money, if any, claimed and the reason(s) the **Contractor** contends the dispute was wrongly decided by the **Commissioner**; (ii) a copy of the written decision of the **Commissioner**; and (iii) a copy of all materials submitted by the **Contractor** to the **Agency**, including the Notice of Dispute. The **Contractor** may not present to the **Comptroller** any material not presented to the **Commissioner**, except at the request of the **Comptroller**.

27.5.2 Response. Within thirty (30) **Days** of receipt of the Notice of Claim, the **Agency** shall make available to the **Comptroller** a copy of all material submitted by the **Agency** to the **Commissioner** in connection with the dispute. The **Agency** may not present to the

Comptroller any material not presented to the **Commissioner** except at the request of the **Comptroller**.

27.5.3 **Comptroller** Investigation. The **Comptroller** may investigate the claim in dispute and, in the course of such investigation, may exercise all powers provided in Sections 7-201 and 7-203 of the Administrative Code. In addition, the **Comptroller** may demand of either party, and such party shall provide, whatever additional material the **Comptroller** deems pertinent to the claim, including original business records of the **Contractor**. Willful failure of the **Contractor** to produce within fifteen (15) **Days** any material requested by the **Comptroller** shall constitute a waiver by the **Contractor** of its claim. The **Comptroller** may also schedule an informal conference to be attended by the **Contractor**, **Agency** representatives, and any other personnel desired by the **Comptroller**.

27.5.4 Opportunity of **Comptroller** to Compromise or Adjust Claim. The **Comptroller** shall have forty-five (45) **Days** from his or her receipt of all materials referred to in Article 27.5.3 to investigate the disputed claim. The period for investigation and compromise may be further extended by agreement between the **Contractor** and the **Comptroller**, to a maximum of ninety (90) **Days** from the **Comptroller's** receipt of all materials. The **Contractor** may not present its petition to the Contract Dispute Resolution Board until the period for investigation and compromise delineated in this Article 27.5.4 has expired. In compromising or adjusting any claim hereunder, the **Comptroller** may not revise or disregard the terms of the **Contract** between the parties.

27.6 Contract Dispute Resolution Board. There shall be a Contract Dispute Resolution Board composed of:

27.6.1 The chief administrative law judge of the Office of Administrative Trials and Hearings (OATH) or his/her designated OATH administrative law judge, who shall act as chairperson, and may adopt operational procedures and issue such orders consistent with this Article 27 as may be necessary in the execution of the Contract Dispute Resolution Board's functions, including, but not limited to, granting extensions of time to present or respond to submissions;

27.6.2 The **CCPO** or his/her designee; any designee shall have the requisite background to consider and resolve the merits of the dispute and shall not have participated personally and substantially in the particular matter that is the subject of the dispute or report to anyone who so participated; and

27.6.3 A person with appropriate expertise who is not an employee of the **City**. This person shall be selected by the presiding administrative law judge from a prequalified panel of individuals, established and administered by OATH with appropriate background to act as decision-makers in a dispute. Such individual may not have a contract or dispute with the **City** or be an officer or employee of any company or organization that does, or regularly represents persons, companies, or organizations having disputes with the **City**.

27.7 Petition to the Contract Dispute Resolution Board. In the event the claim has not been settled or adjusted by the **Comptroller** within the period provided in this Article 27, the **Contractor**, within thirty (30) **Days** thereafter, may petition the Contract Dispute Resolution Board to review the **Commissioner's** determination.

27.7.1 Form and Content of Petition by **Contractor**. The **Contractor** shall present its dispute to the Contract Dispute Resolution Board in the form of a petition, which shall

include (i) a brief written statement of the substance of the dispute, the amount of money, if any, claimed, and the reason(s) the **Contractor** contends the dispute was wrongly decided by the **Commissioner**; (ii) a copy of the written Decision of the **Commissioner,** (iii) copies of all materials submitted by the **Contractor** to the Agency; (iv) a copy of the written decision of the **Comptroller**, if any, and (v) copies of all correspondence with, or written material submitted by the **Contractor**, to the **Comptroller**. The **Contractor** shall concurrently submit four (4) complete sets of the Petition: one set to the **City** Corporation Counsel (Attn: Commercial and Real Estate Litigation Division) and three (3) sets to the Contract Dispute Resolution Board at OATH's offices with proof of service on the **City** Corporation Counsel. In addition, the **Contractor** shall submit a copy of the written statement of the substance of the dispute, cited in (i) above, to both the **Commissioner** and the **Comptroller**.

27.7.2 **Agency** Response. Within thirty (30) **Days** of its receipt of the Petition by the **City** Corporation Counsel, the **Agency** shall respond to the brief written statement of the **Contractor** and make available to the Contract Dispute Resolution Board all material it submitted to the **Commissioner** and **Comptroller**. Three (3) complete copies of the **Agency** response shall be provided to the Contract Dispute Resolution Board and one to the **Contractor**. Extensions of time for submittal of the **Agency** response shall be given as necessary upon a showing of good cause or, upon consent of the parties, for an initial period of up to thirty (30) Days.

27.7.3 Further Proceedings. The Contract Dispute Resolution Board shall permit the **Contractor** to present its case by submission of memoranda, briefs, and oral argument. The Contract Dispute Resolution Board shall also permit the **Agency** to present its case in response to the **Contractor** by submission of memoranda, briefs, and oral argument. If requested by the **City** Corporation Counsel, the **Comptroller** shall provide reasonable assistance in the preparation of the **Agency's** case. Neither the **Contractor** nor the **Agency** may support its case with any documentation or other material that was not considered by the **Comptroller**, unless requested by the Contract Dispute Resolution Board. The Contract Dispute Resolution Board, in its discretion, may seek such technical or other expert advice as it shall deem appropriate and may seek, on its own or upon application of a party, any such additional material from any party as it deems fit. The Contract Dispute Resolution Board, in its discretion, may combine more than one dispute between the parties for concurrent resolution.

27.7.4 Contract Dispute Resolution Board Determination. Within forty-five (45) **Days** of the conclusion of all written submissions and oral arguments, the Contract Dispute Resolution Board shall render a written decision resolving the dispute. In an unusually complex case, the Contract Dispute Resolution Board may render its decision in a longer period, not to exceed ninety (90) **Days**, and shall so advise the parties at the commencement of this period. The Contract Dispute Resolution Board's decision must be consistent with the terms of the **Contract**. Decisions of the Contract Dispute Resolution Board shall only resolve matters before the Contract Dispute Resolution Board and shall not have precedential effect with respect to matters not before the Contract Dispute Resolution Board.

27.7.5 Notification of Contract Dispute Resolution Board Decision. The Contract Dispute Resolution Board shall send a copy of its decision to the **Contractor**, the **ACCO**, the Engineer, the **Comptroller**, the **City** Corporation Counsel, the CCPO, and the **PPB**. A decision in favor of the **Contractor** shall be subject to the prompt payment provisions of the **PPB** Rules. The Required Payment Date shall be thirty (30) Days after the date the parties are formally notified of the Contract Dispute Resolution Board's decision.

27.7.6 Finality of Contract Dispute Resolution Board Decision. The Contract Dispute Resolution
Board's decision shall be final and binding on all parties. Any party may seek review of the Contract Dispute Resolution Board's decision solely in the form of a challenge, filed within four (4) months of the date of the Contract Dispute Resolution Board's decision, in a court of competent jurisdiction of the State of New York, County of New York pursuant to Article 78 of the Civil Practice Law and Rules. Such review by the court shall be limited to the question of whether or not the Contract Dispute Resolution Board's decision was made in violation of lawful procedure, was affected by an error of **Law**, or was arbitrary and capricious or an abuse of discretion. No evidence or information shall be introduced or relied upon in such proceeding that was not presented to the Contract Dispute Resolution Board in accordance with this Article 27.

27.8 Any termination, cancellation, or alleged breach of the **Contract** prior to or during the pendency of any proceedings pursuant to this Article 27 shall not affect or impair the ability of the **Commissioner** or Contract Dispute Resolution Board to make a binding and final decision pursuant to this Article 27.

ARTICLE 28. RECORD KEEPING FOR EXTRA OR DISPUTED WORK OR WORK ON A TIME & MATERIALS BASIS

28.1 While the **Contractor** or any of its **Subcontractors** is performing **Work** on a time and material basis or **Extra Work** on a time and material basis ordered by the **Commissioner** under Article 25, or where the **Contractor** believes that it or any of its **Subcontractors** is performing **Extra Work** but a final determination by **Agency** has not been made, or the **Contractor** or any of its **Subcontractors** is performing disputed **Work** (whether on or off the **Site**), or complying with a determination or order under protest in accordance with Articles 11, 27, and 30, in each such case the **Contractor** shall furnish the **Resident Engineer** daily with three (3) copies of written statements signed by the **Contractor's** representative at the **Site** showing:

28.1.1 The name, trade, and number of each worker employed on such **Work** or engaged in complying with such determination or order, the number of hours employed, and the character of the **Work** each is doing; and

28.1.2 The nature and quantity of any materials, plant and equipment furnished or used in connection with the performance of such **Work** or compliance with such determination or order, and from whom purchased or rented.

28.2 A copy of such statement will be countersigned by the **Resident Engineer**, noting thereon any items not agreed to or questioned, and will be returned to the **Contractor** within two (2) **Days** after submission.

28.3 The **Contractor** and its **Subcontractors**, when required by the **Commissioner**, or the **Comptroller**, shall also produce for inspection, at the office of the **Contractor** or **Subcontractor**, any and all of its books, bid documents, financial statements, vouchers, records, daily job diaries and reports, and cancelled checks, and any other documents relating to showing the nature and quantity of the labor, materials, plant and equipment actually used in the performance of such **Work**, or in complying with such determination or order, and the amounts expended therefor, and shall permit the **Commissioner** and the **Comptroller** to make such extracts therefrom, or copies thereof, as they or either of them may desire.

28.4 In connection with the examination provided for herein, the **Commissioner**, upon demand therefor, will produce for inspection by the **Contractor** such records as the **Agency** may have with

respect to such **Extra Work** or disputed **Work** performed under protest pursuant to order of the **Commissioner**, except those records and reports which may have been prepared for the purpose of determining the accuracy and validity of the **Contractor's** claim.

28.5 Failure to comply strictly with these requirements shall constitute a waiver of any claim for extra compensation or damages on account of the performance of such **Work** or compliance with such determination or order.

ARTICLE 29. OMITTED WORK

29.1 If any **Contract Work** in a lump sum **Contract**, or if any part of a lump sum item in a unit price, lump sum, or percentage-bid **Contract** is omitted by the **Commissioner** pursuant to Article 33, the **Contract** price, subject to audit by the EAO, shall be reduced by a pro rata portion of the lump sum bid amount based upon the percent of **Work** omitted subject to Article 29.4. For the purpose of determining the pro rata portion of the lump sum bid amount, the bid breakdown submitted in accordance with Article 41 shall be considered, but shall not be the determining factor.

29.2 If the whole of a lump sum item or units of any other item is so omitted by the **Commissioner** in a unit price, lump sum, or percentage-bid **Contract**, then no payment will be made therefor except as provided in Article 29.4.

29.3 For units that have been ordered but are only partially completed, the unit price shall be reduced by a pro rata portion of the unit price bid based upon the percentage of **Work** omitted subject to Article 29.4.

29.4 In the event the **Contractor**, with respect to any omitted **Work**, has purchased any non-cancelable material and/or equipment that is not capable of use except in the performance of this **Contract** and has been specifically fabricated for the sole purpose of this **Contract**, but not yet incorporated into the **Work**, the **Contractor** shall be paid for such material and/or equipment in accordance with Article 64.2.1(b); provided, however, such payment is contingent upon the **Contractor's** delivery of such material and/or equipment in acceptable condition to a location designated by the **City**.

29.5 The **Contractor** agrees to make no claim for damages or for loss of overhead and profit with regard to any omitted **Work**.

ARTICLE 30. NOTICE AND DOCUMENTATION OF COSTS AND DAMAGES; PRODUCTION OF FINANCIAL RECORDS

30.1 If the **Contractor** shall claim to be sustaining damages by reason of any act or omission of the **City** or its agents, it shall submit to the **Commissioner** within forty-five (45) **Days** from the time such damages are first incurred, and every thirty (30) **Days** thereafter for as long as such damages are incurred, verified statements of the details and the amounts of such damages, together with documentary evidence of such damages. The **Contractor** may submit any of the above statements within such additional time as may be granted by the **Commissioner** in writing upon written request therefor. Failure of the **Commissioner** to respond in writing to a written request for additional time within thirty (30) **Days** shall be deemed a denial of the request. On failure of the **Contractor** to strictly comply with the foregoing provisions, such claims shall be deemed waived and no right to recover on such claims shall exist. Damages that the **Contractor** may claim in any action or dispute resolution procedure arising under or by reason of this **Contract** shall not be different from or in excess of the statements and documentation made pursuant to this Article 30.

30.2 In addition to the foregoing statements, the **Contractor** shall, upon notice from the **Commissioner**, produce for examination at the **Contractor's** office, by the **Engineer**, **Architect** or **Project Manager**, all of its books of account, bills, invoices, payrolls, subcontracts, time books, daily reports, bank deposit books, bank statements, check books, and cancelled checks, showing all of its acts and transactions in connection with or relating to or arising by reason of this **Contract**, and submit itself and persons in its employment, for examination under oath by any person designated by the **Commissioner** or **Comptroller** to investigate claims made or disputes against the **City** under this **Contract**. At such examination, a duly authorized representative of the **Contractor** may be present.

30.3 In addition to the statements required under Article 28 and this Article 30, the **Contractor** and/or its **Subcontractor** shall, within thirty (30) **Days** upon notice from the **Commissioner** or **Comptroller**, produce for examination at the **Contractor's** and/or **Subcontractor's** office, by a representative of either the **Commissioner** or **Comptroller**, all of its books of account, bid documents, financial statements, accountant workpapers, bills, invoices, payrolls, subcontracts, time books, daily reports, bank deposit books, bank statements, check books, and cancelled checks, showing all of its acts and transactions in connection with or relating to or arising by reason of this **Contract**. Further, the **Contractor** and/or its **Subcontractor** shall submit any person in its employment, for examination under oath by any person designated by the **Commissioner** or **Comptroller** to investigate claims made or disputes against the **City** under this **Contract**. At such examination, a duly authorized representative of the **Contractor** may be present.

30.4 Unless the information and examination required under Article 30.3 is provided by the **Contractor** and/or its **Subcontractor** upon thirty (30) **Days'** notice from the **Commissioner** or **Comptroller**, or upon the **Commissioner's** or **Comptroller's** written authorization to extend the time to comply, the **City** shall be released from all claims arising under, relating to or by reason of this **Contract**, except for sums certified by the **Commissioner** to be due under the provisions of this **Contract**. It is further stipulated and agreed that no person has the power to waive any of the foregoing provisions and that in any action or dispute resolution procedure against the **City** to recover any sum in excess of the sums certified by the **Commissioner** to be due under or by reason of this **Contract**, the **Contractor** must allege in its complaint and prove, at trial or during such dispute resolution procedure, compliance with the provisions of this Article 30.

30.5 In addition, after the commencement of any action or dispute resolution procedure by the **Contractor** arising under or by reason of this **Contract**, the **City** shall have the right to require the **Contractor** to produce for examination under oath, up until the trial of the action or hearing before the Contract Dispute Resolution Board, the books and documents described in Article 30.3 and submit itself and all persons in its employ for examination under oath. If this Article 30 is not complied with as required, then the **Contractor** hereby consents to the dismissal of the action or dispute resolution procedure.

CHAPTER VII
POWERS OF THE RESIDENT ENGINEER, THE ENGINEER OR ARCHITECT AND THE COMMISSIONER

ARTICLE 31. THE RESIDENT ENGINEER

31.1 The **Resident Engineer** shall have the power to inspect, supervise, and control the performance of the **Work**, subject to review by the **Commissioner**. The **Resident Engineer** shall not, however, have the power to issue an **Extra Work** order, except as specifically designated in writing by the **Commissioner**.

ARTICLE 32. THE ENGINEER OR ARCHITECT OR PROJECT MANAGER

32.1 The **Engineer** or **Architect** or **Project Manager**, in addition to those matters elsewhere herein delegated to the **Engineer** and expressly made subject to his/her determination, direction or approval, shall have the power, subject to review by the **Commissioner**:

32.1.1 To determine the amount, quality, and location of the **Work** to be paid for hereunder; and

32.1.2 To determine all questions in relation to the **Work**, to interpret the **Contract Drawings**, **Specifications**, and **Addenda**, and to resolve all patent inconsistencies or ambiguities therein; and

32.1.3 To determine how the **Work** of this **Contract** shall be coordinated with **Work** of **Other Contractors** engaged simultaneously on this **Project**, including the power to suspend any part of the **Work**, but not the whole thereof; and

32.1.4 To make minor changes in the **Work** as he/she deems necessary, provided such changes do not result in a net change in the cost to the **City** or to the **Contractor** of the **Work** to be done under the **Contract**; and

32.1.5 To amplify the **Contract Drawings**, add explanatory information and furnish additional **Specifications** and drawings, consistent with this **Contract**.

32.2 The foregoing enumeration shall not imply any limitation upon the power of the **Engineer** or **Architect** or **Project Manager**, for it is the intent of this **Contract** that all of the **Work** shall generally be subject to his/her determination, direction, and approval, except where the determination, direction or approval of someone other than the **Engineer** or **Architect** or **Project Manager** is expressly called for herein.

32.3 The **Engineer** or **Architect** or **Project Manager** shall not, however, have the power to issue an **Extra Work** order, except as specifically designated in writing by the **Commissioner**.

ARTICLE 33. THE COMMISSIONER

33.1 The **Commissioner**, in addition to those matters elsewhere herein expressly made subject to his/her determination, direction or approval, shall have the power:

33.1.1 To review and make determinations on any and all questions in relation to this **Contract**
and its performance; and

33.1.2 To modify or change this **Contract** so as to require the performance of **Extra Work** (subject, however, to the limitations specified in Article 25) or the omission of **Contract Work**; and

33.1.3 To suspend the whole or any part of the **Work** whenever in his/her judgment such suspension is required:

33.1.3(a) In the interest of the **City** generally; or

33.1.3(b) To coordinate the **Work** of the various contractors engaged on this **Project** pursuant to the provisions of Article 12; or

33.1.3(c) To expedite the completion of the entire **Project** even though the completion of this particular **Contract** may thereby be delayed.

ARTICLE 34. NO ESTOPPEL

34.1 Neither the **City** nor any **Agency**, official, agent or employee thereof, shall be bound, precluded or estopped by any determination, decision, approval, order, letter, payment or certificate made or given under or in connection with this **Contract** by the **City**, the **Commissioner**, the **Engineer**, the **Resident Engineer**, or any other official, agent or employee of the **City**, either before or after the final completion and acceptance of the **Work** and payment therefor:

34.1.1 From showing the true and correct classification, amount, quality or character of the **Work** actually done; or that any such determination, decision, order, letter, payment or certificate was untrue, incorrect or improperly made in any particular, or that the **Work**, or any part thereof, does not in fact conform to the requirements of this **Contract**; and

34.1.2 From demanding and recovering from the **Contractor** any overpayment made to it, or such damages as the **City** may sustain by reason of the **Contractor's** failure to perform each and every part of its **Contract**.

CHAPTER VIII
LABOR PROVISIONS

ARTICLE 35. EMPLOYEES

35.1 The **Contractor** and its **Subcontractors** shall not employ on the **Work**:

35.1.1 Anyone who is not competent, faithful and skilled in the **Work** for which he/she shall be employed; and whenever the **Commissioner** shall inform the **Contractor**, in writing, that any employee is, in his/her opinion, incompetent, unfaithful or disobedient, that employee shall be discharged from the **Work** forthwith, and shall not again be employed upon it; or

35.1.2 Any labor, materials or means whose employment, or utilization during the course of this **Contract**, may tend to or in any way cause or result in strikes, work stoppages, delays, suspension of **Work** or similar troubles by workers employed by the **Contractor** or its **Subcontractors**, or by any of the trades working in or about the buildings and premises where **Work** is being performed under this **Contract**, or by **Other Contractors** or their **Subcontractors** pursuant to other contracts, or on any other building or premises owned or operated by the **City**, its **Agencies**, departments, boards or authorities. Any violation by the **Contractor** of this requirement may, upon certification of the **Commissioner**, be considered as proper and sufficient cause for declaring the **Contractor** to be in default, and for the **City** to take action against it as set forth in Chapter X of this **Contract**, or such other article of this **Contract** as the **Commissioner** may deem proper; or

35.1.3 In accordance with Section 220.3-e of the Labor Law of the State of New York (hereinafter "Labor Law"), the **Contractor** and its **Subcontractors** shall not employ on the **Work** any apprentice, unless he/she is a registered individual, under a bona fide program

registered with the New York State Department of Labor. The allowable ratio of apprentices to journey-level workers in any craft classification shall not be greater than the ratio permitted to the **Contractor** as to its work force on any job under the registered program. Any employee listed on a payroll at an apprentice wage rate, who is not registered as above, shall be paid the wage rate determined by the **Comptroller** of the **City** for the classification of **Work** actually performed. The **Contractor** or **Subcontractor** will be required to furnish written evidence of the registration of its program and apprentices as well as all the appropriate ratios and wage rates, for the area of the construction prior to using any apprentices on the **Contract Work**.

35.2 If the total cost of the **Work** under this **Contract** is at least two hundred fifty thousand ($250,000) dollars, all laborers, workers, and mechanics employed in the performance of the **Contract** on the public work site, either by the **Contractor**, **Subcontractor** or other person doing or contracting to do the whole or a part of the **Work** contemplated by the **Contract**, shall be certified prior to performing any **Work** as having successfully completed a course in construction safety and health approved by the United States Department of Labor's Occupational Safety and Health Administration that is at least ten (10) hours in duration.

35.3 In accordance with Local Law Nos. 30-2012 and 33-2012, codified at sections 6-132 and 12-113 of the Administrative Code, respectively,

35.3.1 The **Contractor** shall not take an adverse personnel action with respect to an officer or employee in retaliation for such officer or employee making a report of information concerning conduct which such officer or employee knows or reasonably believes to involve corruption, criminal activity, conflict of interest, gross mismanagement or abuse of authority by any officer or employee relating to this **Contract** to (a) the Commissioner of the Department of Investigation, (b) a member of the New York City Council, the Public Advocate, or the **Comptroller**, or (c) the **CCPO**, **ACCO**, **Agency** head, or **Commissioner**.

35.3.2 If any of the **Contractor**'s officers or employees believes that he or she has been the subject of an adverse personnel action in violation of Article 35.3.1, he or she shall be entitled to bring a cause of action against the **Contractor** to recover all relief necessary to make him or her whole. Such relief may include but is not limited to: (a) an injunction to restrain continued retaliation, (b) reinstatement to the position such employee would have had but for the retaliation or to an equivalent position, (c) reinstatement of full fringe benefits and seniority rights, (d) payment of two times back pay, plus interest, and (e) compensation for any special damages sustained as a result of the retaliation, including litigation costs and reasonable attorney's fees.

35.3.3 The **Contractor** shall post a notice provided by the **City** in a prominent and accessible place on any site where work pursuant to the **Contract** is performed that contains information about:

35.3.3(a) how its employees can report to the New York City Department of Investigation allegations of fraud, false claims, criminality or corruption arising out of or in connection with the **Contract**; and

35.3.3(b) the rights and remedies afforded to its employees under Administrative Code sections 7-805 (the New York City False Claims Act) and 12-113 (the Whistleblower Protection Expansion Act) for lawful acts taken in connection with the reporting of allegations of fraud, false claims, criminality or corruption in connection with the **Contract**.

35.3.4 For the purposes of this Article 35.3, "adverse personnel action" includes dismissal, demotion, suspension, disciplinary action, negative performance evaluation, any action resulting in loss of staff, office space, equipment or other benefit, failure to appoint, failure to promote, or any transfer or assignment or failure to transfer or assign against the wishes of the affected officer or employee.

35.3.5 This Article 35.3 is applicable to all of the **Contractor**'s **Subcontractors** having subcontracts with a value in excess of $100,000; accordingly, the **Contractor** shall include this rider in all subcontracts with a value a value in excess of $100,000.

35.4 Article 35.3 is not applicable to this **Contract** if it is valued at $100,000 or less. Articles 35.3.1, 35.3.2, 35.3.4, and 35.3.5 are not applicable to this **Contract** if it was solicited pursuant to a finding of an emergency.

ARTICLE 36. NO DISCRIMINATION

36.1 The **Contractor** specifically agrees, as required by Labor Law Section 220-e, as amended, that:

36.1.1 In the hiring of employees for the performance of **Work** under this **Contract** or any subcontract hereunder, neither the **Contractor**, **Subcontractor**, nor any person acting on behalf of such **Contractor** or **Subcontractor**, shall by reason of race, creed, color or national origin discriminate against any citizen of the State of New York who is qualified and available to perform the **Work** to which the employment relates;

36.1.2 Neither the **Contractor**, **Subcontractor**, nor any person on its behalf shall, in any manner, discriminate against or intimidate any employee hired for the performance of **Work** under this **Contract** on account of race, creed, color or national origin;

36.1.3 There may be deducted from the amount payable to the **Contractor** by the **City** under this **Contract** a penalty of fifty ($50.00) dollars for each person for each **Day** during which such person was discriminated against or intimidated in violation of the provisions of this **Contract**; and

36.1.4 This **Contract** may be cancelled or terminated by the **City** and all moneys due or to become due hereunder may be forfeited, for a second or any subsequent violation of the terms or conditions of this Article 36.

36.1.5 This Article 36 covers all construction, alteration and repair of any public building or public work occurring in the State of New York and the manufacture, sale, and distribution of materials, equipment, and supplies to the extent that such operations are performed within the State of New York pursuant to this **Contract**.

36.2 The **Contractor** specifically agrees, as required by Section 6-108 of the Administrative Code, as amended, that:

36.2.1 It shall be unlawful for any person engaged in the construction, alteration or repair of buildings or engaged in the construction or repair of streets or highways pursuant to a **Contract** with the **City** or engaged in the manufacture, sale or distribution of materials, equipment or supplies pursuant to a **Contract** with the **City** to refuse to employ or to refuse to continue in any employment any person on account of the race, color or creed of such person.

36.2.2 It shall be unlawful for any person or any servant, agent or employee of any person, described in Article 36.1.2, to ask, indicate or transmit, orally or in writing, directly or indirectly, the race, color or creed or religious affiliation of any person employed or seeking employment from such person, firm or corporation.

36.2.3 Breach of the foregoing provisions shall be deemed a violation of a material provision of this **Contract**.

36.2.4 Any person, or the employee, manager or owner of or officer of such firm or corporation who shall violate any of the provisions of this Article 36.2 shall, upon conviction thereof, be punished by a fine of not more than one hundred ($100.00) dollars or by imprisonment for not more than thirty (30) **Days**, or both.

36.3 This **Contract** is subject to the requirements of Executive Order No. 50 (1980) ("E.O. 50"), as revised, and the rules and regulations promulgated thereunder. No contract will be awarded unless and until these requirements have been complied with in their entirety. By signing this **Contract**, the **Contractor** agrees that it:

36.3.1 Will not engage in any unlawful discrimination against any employee or applicant for employment because of race, creed, color, national origin, sex, age, disability, marital status or sexual orientation with respect to all employment decisions including, but not limited to, recruitment, hiring, upgrading, demotion, downgrading, transfer, training, rates of pay or other forms of compensation, layoff, termination, and all other terms and conditions of employment; and

36.3.2 Will not engage in any unlawful discrimination in the selection of **Subcontractors** on the basis of the owner's race, color, creed, national origin, sex, age, disability, marital status or sexual orientation; and

36.3.3 Will state in all solicitations or advertisements for employees placed by or on behalf of the **Contractor** that all qualified applicants will receive consideration for employment without unlawful discrimination based on race, creed, color, national origin, sex, age, citizens status, disability, marital status, sexual orientation, or that it is an equal employment opportunity employer; and

36.3.4 Will send to each labor organization or representative of workers with which it has a collective bargaining agreement or other contract or memorandum of understanding, written notification of its equal employment opportunity commitments under E.O. 50 and the rules and regulations promulgated thereunder; and

36.3.5 Will furnish, before the award of the **Contract**, all information and reports, including an employment report, that are required by E.O. 50, the rules and regulations promulgated thereunder, and orders of the **City** Department of Business Services, Division of Labor Services (**DLS**) and will permit access to its books, records, and accounts by the **DLS** for the purposes of investigation to ascertain compliance with such rules, regulations, and orders.

36.4 The **Contractor** understands that in the event of its noncompliance with the nondiscrimination clauses of this **Contract** or with any of such rules, regulations, or orders, such noncompliance shall constitute a material breach of this **Contract** and noncompliance with E.O. 50 and the rules and regulations promulgated thereunder. After a hearing held pursuant to the rules of the **DLS**, the Director of the **DLS** may direct the **Commissioner** to impose any or all of the following sanctions:

36.4.1 Disapproval of the **Contractor**; and/or

36.4.2 Suspension or termination of the **Contract**; and/or

36.4.3 Declaring the **Contractor** in default; and/or

36.4.4 In lieu of any of the foregoing sanctions, the Director of the **DLS** may impose an employment program.

In addition to any actions taken under this **Contract**, failure to comply with E.O. 50 and the rules and regulations promulgated thereunder, in one or more instances, may result in a **City Agency** declaring the **Contractor** to be non-responsible in future procurements. The **Contractor** further agrees that it will refrain from entering into any **Contract** or **Contract** modification subject to E.O. 50 and the rules and regulations promulgated thereunder with a **Subcontractor** who is not in compliance with the requirements of E.O. 50 and the rules and regulations promulgated thereunder.

36.5 The **Contractor** specifically agrees, as required by Section 6-123 of the Administrative Code, that:

36.5.1 The **Contractor** will not engage in any unlawful discriminatory practice in violation of Title 8 of the Administrative Code; and

36.5.2 Any failure to comply with this Article 36.5 may subject the **Contractor** to the remedies set forth in Section 6-123 of the Administrative Code, including, where appropriate, sanctions such as withholding of payment, imposition of an employment program, finding the **Contractor** to be in default, cancellation of the **Contract**, or any other sanction or remedy provided by **Law** or **Contract**.

ARTICLE 37. LABOR LAW REQUIREMENTS

37.1 The **Contractor** shall strictly comply with all applicable provisions of the Labor Law, as amended. Such compliance is a material term of this **Contract**.

37.2 The **Contractor** specifically agrees, as required by Labor Law Sections 220 and 220-d, as amended, that:

37.2.1 Hours of **Work**: No laborer, worker, or mechanic in the employ of the **Contractor**, **Subcontractor** or other person doing or contracting to do the whole or a part of the **Work** contemplated by this **Contract** shall be permitted or required to work more than eight (8) hours in any one (1) **Day**, or more than five (5) **Days** in any one (1) week, except as provided in the Labor Law and in cases of extraordinary emergency including fire, flood, or danger to life or property, or in the case of national emergency when so proclaimed by the President of the United States of America.

37.2.2 In situations in which there are not sufficient laborers, workers, and mechanics who may be employed to carry on expeditiously the **Work** contemplated by this **Contract** as a result of such restrictions upon the number of hours and **Days** of labor, and the immediate commencement or prosecution or completion without undue delay of the **Work** is necessary for the preservation of the **Site** and/or for the protection of the life and limb of the persons using the same, such laborers, workers, and mechanics shall be permitted or required to

work more than eight (8) hours in any one (1) **Day**; or five (5) **Days** in any one (1) week; provided, however, that upon application of any **Contractor**, the **Commissioner** shall have first certified to the Commissioner of Labor of the State of New York (hereinafter "Commissioner of Labor") that such public **Work** is of an important nature and that a delay in carrying it to completion would result in serious disadvantage to the public; and provided, further, that such Commissioner of Labor shall have determined that such an emergency does in fact exist as provided in Labor Law Section 220.2.

37.2.3 Failure of the **Commissioner** to make such a certification to the Commissioner of Labor shall not entitle the **Contractor** to damages for delay or for any cause whatsoever.

37.2.4 Prevailing Rate of Wages: The wages to be paid for a legal day's **Work** to laborers, workers, or mechanics employed upon the **Work** contemplated by this **Contract** or upon any materials to be used thereon shall not be less than the "prevailing rate of wage" as defined in Labor Law Section 220, and as fixed by the **Comptroller** in the attached Schedule of Wage Rates and in updated schedules thereof. The prevailing wage rates and supplemental benefits to be paid are those in effect at the time the **Work** is being performed.

37.2.5 Requests for interpretation or correction in the Information for Bidders includes all requests for clarification of the classification of trades to be employed in the performance of the **Work** under this **Contract**. In the event that a trade not listed in the **Contract** is in fact employed during the performance of this **Contract**, the **Contractor** shall be required to obtain from the **Agency** the prevailing wage rates and supplementary benefits for the trades used and to complete the performance of this **Contract** at the price at which the **Contract** was awarded.

37.2.6 Minimum Wages: Except for employees whose wage is required to be fixed pursuant to Labor Law Section 220, all persons employed by the **Contractor** and any **Subcontractor** in the manufacture or furnishing of the supplies, materials, or equipment, or the furnishing of work, labor, or services, used in the performance of this **Contract**, shall be paid, without subsequent deduction or rebate unless expressly authorized by **Law**, not less than the sum mandated by **Law**.

37.3 Working Conditions: No part of the **Work**, labor or services shall be performed or rendered by the **Contractor** in any plants, factories, buildings or surroundings or under working conditions which are unsanitary or hazardous or dangerous to the health and safety of employees engaged in the performance of this **Contract**. Compliance with the safety, sanitary, and factory inspection **Laws** of the state in which the **Work** is to be performed shall be prima facie evidence of compliance with this Article 37.3.

37.4 Prevailing Wage Enforcement: The **Contractor** agrees to pay for all costs incurred by the **City** in enforcing prevailing wage requirements, including the cost of any investigation conducted by or on behalf of the **Agency** or the **Comptroller,** where the **City** discovers a failure to comply with any of the requirements of this Article 37 by the **Contractor** or its **Subcontractor(s)**. The **Contractor** also agrees that, should it fail or refuse to pay for any such investigation, the **Agency** is hereby authorized to deduct from a **Contractor's** account an amount equal to the cost of such investigation.

37.4.1 The Labor Law Section 220 and Section 220-d, as amended, provide that this **Contract** shall be forfeited and no sum paid for any **Work** done hereunder on a second conviction for willfully paying less than:

37.4.1(a) The stipulated prevailing wage scale as provided in Labor Law section 220, as amended, or

37.4.1(b) The stipulated minimum hourly wage scale as provided in Labor Law section 220-d, as amended.

37.4.2 For any breach or violation of either working conditions (Article 37.3) or minimum wages (Article 37.2.6) provisions, the party responsible therefor shall be liable to the **City** for liquidated damages, which may be withheld from any amounts due on any contracts with the **City** of such party responsible, or may be recovered in actions brought by the **City** Corporation Counsel in the name of the **City**, in addition to damages for any other breach of this **Contract**, for a sum equal to the amount of any underpayment of wages due to any employee engaged in the performance of this **Contract**. In addition, the **Commissioner** shall have the right to cancel contracts and enter into other contracts for the completion of the original contract, with or without public letting, and the original **Contractor** shall be liable for any additional cost. All sums withheld or recovered as deductions, rebates, refunds, or underpayment of wages hereunder, shall be held in a special deposit account and shall be paid without interest, on order of the **Comptroller**, directly to the employees who have been paid less than minimum rates of pay as set forth herein and on whose account such sums were withheld or recovered, provided that no claims by employees for such payments shall be entertained unless made within two (2) years from the date of actual notice to the **Contractor** of the withholding or recovery of such sums by the **City**.

37.4.3 A determination by the **Comptroller** that a **Contractor** and/or its **Subcontractor** willfully violated Labor Law Section 220 will be forwarded to the **City's** five District Attorneys for review.

37.4.4 The **Contractor's** or **Subcontractor's** noncompliance with this Article 37.4 and Labor Law Section 220 may result in an unsatisfactory performance evaluation and the **Comptroller** may also find and determine that the **Contractor** or **Subcontractor** willfully violated the New York Labor **Law**.

37.4.4(a) An unsatisfactory performance evaluation for noncompliance with this Article 37.4 may result in a determination that the **Contractor** is a non-responsible bidder on subsequent procurements with the **City** and thus a rejection of a future award of a contract with the **City**, as well as any other sanctions provided for by **Law**.

37.4.4(b) Labor Law Section 220-b, as amended, provides that when two (2) final determinations have been rendered against a **Contractor** or **Subcontractor** within any consecutive six (6) year period determining that such **Contractor** or **Subcontractor** has willfully failed to pay the prevailing rate of wages or to provide supplements in accordance with the Labor Law and this Article 37.4, whether such failures were concurrent or consecutive and whether or not such final determinations concerning separate public works projects are rendered simultaneously, such **Contractor** or **Subcontractor** shall be ineligible to submit a bid on or be awarded any public works contract with the **City** for a period of five (5) years from the second final determination. If the final determination involves the falsification of payroll records or the kickback of wages or supplements, the **Contractor** or **Subcontractor** shall be ineligible to submit a bid on or be awarded any public works contract with the **City** for a period of five (5) years from the first final determination.

37.4.4(c) Labor Law Section 220, as amended, provides that the **Contractor** or **Subcontractor** found to have violated this Article 37.4 may be directed to make payment of wages or supplements including interest found to be due, and the **Contractor** or **Subcontractor** may be directed to make payment of a further sum as

a civil penalty in an amount not exceeding twenty-five (25%) percent of the total amount found to be due.

37.5 The **Contractor** and its **Subcontractors** shall within ten (10) **Days** after mailing of a Notice of Award or written order, post in prominent and conspicuous places in each and every plant, factory, building, and structure where employees of the **Contractor** and its **Subcontractors** engaged in the performance of this **Contract** are employed, notices furnished by the **City**, in relation to prevailing wages and supplements, minimum wages, and other stipulations contained in Sections 220 and 220-h of the Labor Law, and the **Contractor** and its **Subcontractors** shall continue to keep such notices posted in such prominent and conspicuous places until **Final Acceptance** of the supplies, materials, equipment, or **Work**, labor, or services required to be furnished or rendered under this **Contract**.

37.6 The **Contractor** shall strictly comply with all of the provisions of Articles 37.6.1 through 37.6.5, and provide for all workers, laborers or mechanics in its employ, the following:

37.6.1 Notices Posted At **Site**: Post, in a location designated by the **City**, schedules of prevailing wages and supplements for this **Project**, a copy of all re-determinations of such schedules for the **Project**, the Workers' Compensation **Law** Section 51 notice, all other notices required by **Law** to be posted at the **Site**, the **City** notice that this **Project** is a public works project on which each worker is entitled to receive the prevailing wages and supplements for the occupation at which he or she is working, and all other notices which the **City** directs the **Contractor** to post. The **Contractor** shall provide a surface for such notices which is satisfactory to the **City**. The **Contractor** shall maintain and keep current such notices in a legible manner and shall replace any notice or schedule which is damaged, defaced, illegible or removed for any reason. The **Contractor** shall post such notices before commencing any **Work** on the **Site** and shall maintain such notices until all **Work** on the **Site** is complete; and

37.6.2 Daily **Site** Sign-in Sheets: Maintain daily **Site** sign-in sheets, and require that **Subcontractors** maintain daily **Site** sign-in sheets for its employees, which include blank spaces for an employee's name to be both printed and signed, job title, date started and Social Security number, the time the employee began work and the time the employee left work, until **Final Acceptance** of the supplies, materials, equipment, or **Work**, labor, or services to be furnished or rendered under this **Contract** unless exception is granted by the **Comptroller** upon application by the **Agency**. In the alternative, subject to the approval of the **CCPO**, the **Contractor** and **Subcontractor** may maintain an electronic or biometric sign-in system, which provides the information required by this Article 37.6.2; and

37.6.3 Individual Employee Information Notices: Distribute a notice to each worker, laborer or mechanic employed under this **Contract**, in a form provided by the **Agency**, that this **Project** is a public works project on which each worker, laborer or mechanic is entitled to receive the prevailing rate of wages and supplements for the occupation at which he or she is working. If the total cost of the **Work** under this **Contract** is at least two hundred fifty thousand ($250,000) dollars, such notice shall also include a statement that each worker, laborer or mechanic must be certified prior to performing any **Work** as having successfully completed a course in construction safety and health approved by the United States Department of Labor's Occupational Safety and Health Administration that is at least ten (10) hours in duration. Such notice shall be distributed to each worker before he or she starts performing any **Work** of this **Contract** and with the first paycheck after July first of each year. "Worker, laborer or mechanic" includes employees of the **Contractor** and all **Subcontractors** and all employees of suppliers entering the **Site**. At the time of distribution, the **Contractor** shall have each worker, laborer or mechanic sign a statement, in a form provided by the **Agency**, certifying that the worker has received the notice required by this

Article 37.6.3, which signed statement shall be maintained with the payroll records required by this **Contract**; and

37.6.3(a) The **Contractor** and each **Subcontractor** shall notify each worker, laborer or mechanic employed under this **Contract** in writing of the prevailing rate of wages for their particular job classification. Such notification shall be given to every worker, laborer, and mechanic on their first pay stub and with every pay stub thereafter; and

37.6.4 **Site** Laminated Identification Badges: The **Contractor** shall provide laminated identification badges which include a photograph of the worker's, laborer's or mechanic's face and indicate the worker's, laborer's or mechanic's name, trade, employer's name, and employment starting date (month/day/year). Further, the **Contractor** shall require as a condition of employment on the **Site**, that each and every worker, laborer or mechanic wear the laminated identification badge at all times and that it may be seen by any representative of the **City**. The **Commissioner** may grant a written waiver from the requirement that the laminated identification badge include a photograph if the **Contractor** demonstrates that the identity of an individual wearing a laminated identification badge can be easily verified by another method; and

37.6.5 Language Other Than English Used On **Site**: Provide the **ACCO** notice when three (3) or more employees (worker and/or laborer and/or mechanic) on the **Site**, at any time, speak a language other than English. The **ACCO** will then provide the **Contractor** the notices described in Article 37.6.1 in that language or languages as may be required. The **Contractor** is responsible for all distributions under this Article 37; and

37.6.6 Provision of Records: The **Contractor** and **Subcontractor(s)** shall produce within five (5) **Days** on the **Site** of the **Work** and upon a written order of the **Engineer**, the **Commissioner**, the **ACCO**, the **Agency EAO**, or the **Comptroller,** such records as are required to be kept by this Article 37.6; and

37.6.7 The **Contractor** and **Subcontractor(s)** shall pay employees by check or direct deposit. If this **Contract** is for an amount greater than one million ($1,000,000) dollars, checks issued by the **Contractor** to covered employees shall be generated by a payroll service or automated payroll system (an in-house system may be used if approved by the **Agency**). For any subcontract for an amount greater than seven hundred fifty thousand ($750,000) dollars, checks issued by a **Subcontractor** to covered employees shall be generated by a payroll service or automated payroll system (an in-house system may be used if approved by the **Agency**); and

37.6.8 The failure of the **Contractor** or **Subcontractor(s)** to comply with the provisions of Articles 37.6.1 through 37.6.7 may result in the **Commissioner** declaring the **Contractor** in default and/or the withholding of payments otherwise due under the **Contract.**

37.7 The **Contractor** and its **Subcontractors** shall keep such employment and payroll records as are required by Section 220 of the Labor Law. The failure of the **Contractor** or **Subcontractor(s)** to comply with the provisions of this Article 37.7 may result in the **Commissioner** declaring the **Contractor** in default and/or the withholding of payments otherwise due under the **Contract.**

37.8 At the time the **Contractor** makes application for each partial payment and for final payment, the **Contractor** shall submit to the **Commissioner** a written payroll certification, in the form provided by this **Contract**, of compliance with the prevailing wage, minimum wage, and other provisions and stipulations required by Labor Law Section 220 and of compliance with the training requirements of

Labor Law Section 220-h set forth in Article 35.2. This certification of compliance shall be a condition precedent to payment and no payment shall be made to the **Contractor** unless and until each such certification shall have been submitted to and received by the **Commissioner**.

37.9 This **Contract** is executed by the **Contractor** with the express warranty and representation that the **Contractor** is not disqualified under the provisions of Section 220 of the Labor Law from the award of the **Contract**.

37.10 Any breach or violation of any of the foregoing shall be deemed a breach or violation of a material provision of this **Contract**, and grounds for cancellation thereof by the **City**.

ARTICLE 38. PAYROLL REPORTS

38.1 The **Contractor** and its **Subcontractor(s)** shall maintain on the **Site** during the performance of the **Work** the original payrolls or transcripts thereof which the **Contractor** and its **Subcontractor(s)** are required to maintain and shall submit such original payrolls or transcripts, subscribed and affirmed by it as true, within thirty (30) **Days** after issuance of its first payroll, and every thirty (30) **Days** thereafter, pursuant to Labor Law Section 220(3-a)(a)(iii). The **Contractor** and **Subcontractor(s)** shall submit such original payrolls or transcripts along with each and every payment requisition. If payment requisitions are not submitted at least once a month, the **Contractor** and its **Subcontractor(s)** shall submit original payrolls and transcripts both along with its payment requisitions and independently of its payment requisitions.

38.2 The **Contractor** shall maintain payrolls or transcripts thereof for six (6) years from the date of completion of the **Work** on this **Contract**. If such payrolls and transcripts are maintained outside of New York City after the completion of the **Work** and their production is required pursuant to this Article 38, the **Contractor** shall produce such records in New York City upon request by the City.

38.3 The **Contractor** and **Subcontractor(s)** shall comply with any written order, direction, or request made by the **Engineer**, the **Commissioner**, the **ACCO**, the **Agency EAO**, the **Agency Labor Law Investigator(s)**, or the **Comptroller**, to provide to the requesting party any of the following information and/or records within five (5) **Days** of such written order, direction, or request:

38.3.1 Such original payrolls or transcripts thereof subscribed and affirmed by it as true and the statements signed by each worker pursuant to this Chapter VIII; and/or

38.3.2 Attendance sheets for each **Day** on which any employee of the **Contractor** and/or any of the **Subcontractor(s)** performed **Work** on the **Site**, which attendance sheet shall be in a form acceptable to the **Agency** and shall provide information acceptable to the **Agency** to identify each such employee; and/or

38.3.3 Any other information to satisfy the **Engineer**, the **Commissioner**, the **ACCO**, the **Agency EAO**, the **Agency Labor Law Investigator(s)** or the **Comptroller**, that this Chapter VIII and the Labor Law, as to the hours of employment and prevailing rates of wages and/or supplemental benefits, are being observed.

38.4 The failure of the **Contractor** or **Subcontractor(s)** to comply with the provisions of Articles 38.1 and/or 38.2 may result in the **Commissioner** declaring the **Contractor** in default and/or the withholding of payments otherwise due under the **Contract**.

ARTICLE 39. DUST HAZARDS

39.1 Should a harmful dust hazard be created in performing the **Work** of this **Contract**, for the elimination of which appliances or methods have been approved by the Board of Standards and Appeals of the City of New York, such appliances and methods shall be installed, maintained, and effectively operated during the continuance of such harmful dust hazard. Failure to comply with this provision after notice shall make this **Contract** voidable at the sole discretion of the **City**.

CHAPTER IX
PARTIAL AND FINAL PAYMENTS

ARTICLE 40. CONTRACT PRICE

40.1 The **City** shall pay, and the **Contractor** agrees to accept, in full consideration for the **Contractor's** performance of the **Work** subject to the terms and conditions hereof, the lump sum price or unit prices for which this **Contract** was awarded, plus the amount required to be paid for any **Extra Work** ordered by the **Commissioner** under Article 25, less credit for any **Work** omitted pursuant to Article 29.

ARTICLE 41. BID BREAKDOWN ON LUMP SUM

41.1 Within fifteen (15) **Days** after the commencement date specified in the **Notice to Proceed** or **Order to Work**, unless otherwise directed by the **Resident Engineer**, the **Contractor** shall submit to the **Resident Engineer** a breakdown of its bid price, or of lump sums bid for items of the **Contract**, showing the various operations to be performed under the **Contract**, as directed in the progress schedule required under Article 9, and the value of each of such operations, the total of such items to equal the lump sum price bid. Said breakdown must be approved in writing by the **Resident Engineer**.

41.2 No partial payment will be approved until the **Contractor** submits a bid breakdown that is acceptable to the **Resident Engineer**.

41.3 The **Contractor** shall also submit such other information relating to the bid breakdown as directed by the **Resident Engineer**. Thereafter, the breakdown may be used only for checking the **Contractor's** applications for partial payments hereunder, but shall not be binding upon the **City**, the **Commissioner**, or the **Engineer** for any purpose whatsoever.

ARTICLE 42. PARTIAL PAYMENTS

42.1 From time to time as the **Work** progresses satisfactorily, but not more often than once each calendar month (except where the **Commissioner** approves in writing the submission of invoices on a more frequent basis and for invoices relating to **Work** performed pursuant to a change order), the **Contractor** may submit to the **Engineer** a requisition for a partial payment in the prescribed form, which shall contain an estimate of the quantity and the fair value of the **Work** done during the payment period.

42.2 Partial payments may be made for materials, fixtures, and equipment in advance of their actual incorporation in the **Work**, as the **Commissioner** may approve, and upon the terms and conditions set forth in the General Conditions.

42.3 The **Contractor** shall also submit to the **Commissioner** in connection with every application for partial payment a verified statement in the form prescribed by the **Comptroller** setting forth the information required under Labor Law Section 220-a.

42.4 Within thirty (30) **Days** after receipt of a satisfactory payment application, and within sixty (60) **Days** after receipt of a satisfactory payment application in relation to **Work** performed pursuant to a change order, the **Engineer** will prepare and certify, and the **Commissioner** will approve, a voucher for a partial payment in the amount of such approved estimate, less any and all deductions authorized to be made by the **Commissioner** under the terms of this **Contract** or by **Law**.

ARTICLE 43. PROMPT PAYMENT

43.1 The Prompt Payment provisions of the **PPB** Rules in effect at the time of the bid will be applicable to payments made under this **Contract**. The provisions require the payment to the **Contractor** of interest on payments made after the required payment date, except as set forth in the **PPB** Rules.

43.2 The **Contractor** shall submit a proper invoice to receive payment, except where the **Contract** provides that the **Contractor** will be paid at predetermined intervals without having to submit an invoice for each scheduled payment.

43.3 Determination of interest due will be made in accordance with the **PPB** Rules.

43.4 If the **Contractor** is paid interest, the proportionate share(s) of that interest shall be forwarded by the **Contractor** to its **Subcontractor(s)**.

43.5 The **Contractor** shall pay each **Subcontractor** or **Materialman** not later than seven (7) **Days** after receipt of payment out of amounts paid to the **Contractor** by the **City** for **Work** performed by the **Subcontractor** or **Materialman** under this **Contract**.

43.5.1 If **Contractor** fails to make any payment to any **Subcontractor** or **Materialman** within seven (7) **Days** after receipt of payment by the **City** pursuant to this Article 43.5, then the **Contractor** shall pay interest on amounts due to such **Subcontractor** or **Materialman** at the rate of interest in effect on the date such payment is made by the **Contractor** computed in accordance with Section 756-b (1)(b) of the New York General Business Law. Accrual of interest shall commence on the **Day** immediately following the expiration of the seventh **Day** following receipt of payment by the **Contractor** from the **City** and shall end on the date on which payment is made.

43.6 The **Contractor** shall include in each of its subcontracts a provision requiring each **Subcontractor** to make payment to each of its **Subcontractors** or **Materialmen** for **Work** performed under this **Contract** in the same manner and within the same time period set forth above.

ARTICLE 44. SUBSTANTIAL COMPLETION PAYMENT

44.1 The **Contractor** shall submit with the **Substantial Completion** requisition:

44.1.1 A final verified statement of any pending Article 27 disputes in accordance with the **PPB** Rules and this **Contract** and any and all alleged claims against the **City**, in any way connected with or arising out of this **Contract** (including those as to which details may have been furnished pursuant to Articles 11, 27, 28, and 30) setting forth with respect to each

such claim the total amount thereof, the various items of labor and materials included therein, and the alleged value of each item; and if the alleged claim be one for delay, the alleged cause of each such delay, the period or periods of time, giving the dates when the **Contractor** claims the performance of the **Work** or a particular part thereof was delayed, and an itemized statement and breakdown of the amount claimed for each such delay.

44.1.1(a) With respect to each such claim, the **Commissioner**, the **Comptroller** and, in the event of litigation, the **City** Corporation Counsel shall have the same right to inspect, and to make extracts or copies of, the **Contractor's** books, vouchers, records, etc., as is referred to in Articles 11, 27, 28, and 30. Nothing contained in this Article 44.1.1(a) is intended to or shall relieve the **Contractor** from the obligation of complying strictly with Articles 11, 27, 28, and 30. The **Contractor** is warned that unless such claims are completely set forth as herein required, the **Contractor** upon acceptance of the **Substantial Completion** payment pursuant to this Article 44, will have waived any such claims.

44.1.2 A **Final Approved Punch List.**

44.1.3 Where required, a request for an extension of time to achieve **Substantial Completion** or final extension of time.

44.2 The **Commissioner** shall issue a voucher calling for payment of any part or all of the balance due for **Work** performed under the **Contract**, including monies retained under Article 21, less any and all deductions authorized to be made by the **Commissioner**, under this **Contract** or by **Law**, and less twice the amount the **Commissioner** considers necessary to ensure the completion of the balance of the **Work** by the **Contractor**. Such a payment shall be considered a partial and not a final payment. No **Substantial Completion** payment shall be made under this Article 44 where the **Contractor** failed to complete the **Work** within the time fixed for such completion in the Schedule A of the General Conditions, or within the time to which completion may have been extended, until an extension or extensions of time for the completion of **Work** have been acted upon pursuant to Article 13.

44.3 No further partial payments shall be made to the **Contractor** after **Substantial Completion**, except the **Substantial Completion** payment and payment pursuant to any **Contractor's** requisition that were properly filed with the **Commissioner** prior to the date of **Substantial Completion**; however, the **Commissioner** may grant a waiver for further partial payments after the date of **Substantial Completion** to permit payments for change order **Work** and/or release of retainage and deposits pursuant to Articles 21 and 24. Such waiver shall be in writing.

44.4 The **Contractor** acknowledges that nothing contained in this Article 44 is intended to or shall in any way diminish the force and effect of Article 13.

ARTICLE 45. FINAL PAYMENT

45.1 After completion and **Final Acceptance** of the **Work**, the **Contractor** shall submit all required certificates and documents, together with a requisition for the balance claimed to be due under the **Contract**, less the amount authorized to be retained for maintenance under Article 24. Such submission shall be within 90 days of the date of the **Commissioner's** written determination of **Final Acceptance**, or within such additional time as may be granted by the **Commissioner** in writing. If the **Contractor** fails to submit all required certificates and documents within the time allowed, no payment of the balance claimed shall be made to the **Contractor** and the **Contractor** shall be deemed to have forfeited its right to

payment of any balance claimed. A verified statement similar to that required in connection with applications for partial payments shall also be submitted to the **Commissioner**.

45.2 Amended Verified Statement of Claims: The **Contractor** shall also submit with the final requisition any amendments to the final verified statement of any pending dispute resolution procedures in accordance with the **PPB** Rules and this **Contract** and any and all alleged claims against the **City**, in any way connected with or arising out of this **Contract** (including those as to which details may have been furnished pursuant to Articles 11, 27, 28, and 30) that have occurred subsequent to **Substantial Completion**, setting forth with respect to each such claim the total amount thereof, the various items of labor and materials included therein, and the alleged value of each such item; and if the alleged claim be one for delay, the alleged cause of each such delay, the period or periods of time, giving the dates when the **Contractor** claims the performance of the **Work** or a particular part thereof was delayed, and an itemized statement and breakdown of the amount claimed for each such delay. With reference to each such claim, the **Commissioner**, the **Comptroller** and, in the event of litigation, the **City** Corporation Counsel shall have the same right to inspect, and to make extracts or copies of, the **Contractor's** books, vouchers, records, etc., as is referred to in Articles 11, 27, 28, and 30. Nothing contained in this Article 45.2, is intended to or shall relieve the **Contractor** from the obligation of complying strictly with Articles 11, 27, 28, and 30. The **Contractor** is warned that unless such claims are completely set forth as herein required, the **Contractor**, upon acceptance of the Final Payment pursuant to Article 46, will have waived any such claims.

45.3 Preparation of Final Voucher: Upon determining the balance due hereunder other than on account of claims, the **Engineer** will prepare and certify, for the Commissioner's approval, a voucher for final payment in that amount less any and all deductions authorized to be made by the **Commissioner** under this **Contract** or by **Law**. In the case of a lump sum **Contract**, the **Commissioner** shall certify the voucher for final payment within thirty (30) **Days** from the date of completion and acceptance of the **Work**, provided all requests for extensions of time have been acted upon.

45.3.1 All prior certificates and vouchers upon which partial payments were made, being merely estimates made to enable the **Contractor** to prosecute the **Work** more advantageously, shall be subject to correction in the final voucher, and the certification of the **Engineer** thereon and the approval of the **Commissioner** thereof, shall be conditions precedent to the right of the **Contractor** to receive any money hereunder. Such final voucher shall be binding and conclusive upon the **Contractor**.

45.3.2 Payment pursuant to such final voucher, less any deductions authorized to be made by the **Commissioner** under this **Contract** or by **Law**, shall constitute the final payment, and shall be made by the **Comptroller** within thirty (30) **Days** after the filing of such voucher in his/her office.

45.4 The **Contractor** acknowledges that nothing contained in this Article 45 is intended to or shall in any way diminish the force and effect of Article 13.

ARTICLE 46. ACCEPTANCE OF FINAL PAYMENT

46.1 The acceptance by the **Contractor**, or by anyone claiming by or through it, of the final payment, whether such payment be made pursuant to any judgment of any court, or otherwise, shall constitute and operate as a release of the **City** from any and all claims of and liability to the **Contractor** for anything heretofore done or furnished for the **Contractor** relating to or arising out of this **Contract** and the **Work** done hereunder, and for any prior act, neglect or default on the part of the **City** or any of its officials, agents or employees, excepting only a claim against the **City** for the amounts deducted or retained in accordance with the terms and provisions of this **Contract** or by **Law**, and excepting any

claims, not otherwise waived, or any pending dispute resolution procedures which are contained in the verified statement filed with the **Contractor's** substantial and final requisitions pursuant to Articles 44 and 45.

46.2 The **Contractor** is warned that the execution by it of a release, in connection with the acceptance of the final payment, containing language purporting to reserve claims other than those herein specifically excepted from the operation of this Article 46, or those for amounts deducted by the **Commissioner** from the final requisition or from the final payment as certified by the **Engineer** and approved by the **Commissioner**, shall not be effective to reserve such claims, anything stated to the **Contractor** orally or in writing by any official, agent or employee of the **City** to the contrary notwithstanding.

46.3 Should the **Contractor** refuse to accept the final payment as tendered by the **Comptroller**, it shall constitute a waiver of any right to interest thereon.

46.4 The **Contractor**, however, shall not be barred by this Article 46 from commencing an action for breach of **Contract** to the extent permitted by **Law** and by the terms of the **Contract** for any claims that are contained in the verified statement filed with the **Contractor's** substantial and final requisitions pursuant to Articles 44 and 45 or that arose after submission of the final payment requisition, provided that a detailed and verified statement of claim is served upon the contracting **Agency** and **Comptroller** not later than forty (40) **Days** after the making of such final payment by electronic funds transfer (EFT) or the mailing of such final payment. The statement shall specify the items upon which the claim will be based and any such claim shall be limited to such items.

ARTICLE 47. APPROVAL BY PUBLIC DESIGN COMMISSION

47.1 All works of art, including paintings, mural decorations, stained glass, statues, bas-reliefs, and other sculptures, monuments, fountains, arches, and other structures of a permanent character intended for ornament or commemoration, and every design of the same to be used in the performance of this **Contract**, and the design of all bridges, approaches, buildings, gates, fences, lamps, or structures to be erected, pursuant to the terms of this **Contract**, shall be submitted to the Art Commission, d/b/a the Public Design Commission of the City of New York, and shall be approved by the Public Design Commission prior to the erection or placing in position of the same. The final payment shall not become due or payable under this **Contract** unless and until the Public Design Commission shall certify that the design for the **Work** herein contracted for has been approved by the said Public Design Commission, and that the same has been executed in substantial accordance with the design so approved, pursuant to the provisions of Chapter 37, Section 854 of the **City** Charter, as amended.

CHAPTER X
CONTRACTOR'S DEFAULT

ARTICLE 48. COMMISSIONER'S RIGHT TO DECLARE CONTRACTOR IN DEFAULT

48.1 In addition to those instances specifically referred to in other Articles herein, the **Commissioner** shall have the right to declare the **Contractor** in default of this **Contract** if:

48.1.1 The **Contractor** fails to commence **Work** when notified to do so by the **Commissioner**; or
if

48.1.2 The **Contractor** shall abandon the **Work**; or if

48.1.3 The **Contractor** shall refuse to proceed with the **Work** when and as directed by the **Commissioner**; or if

48.1.4 The **Contractor** shall, without just cause, reduce its working force to a number which, if maintained, would be insufficient, in the opinion of the **Commissioner**, to complete the **Work** in accordance with the progress schedule; or if

48.1.5 The **Contractor** shall fail or refuse to increase sufficiently such working force when ordered to do so by the **Commissioner**; or if

48.1.6 The **Contractor** shall sublet, assign, transfer, convert or otherwise dispose of this **Contract** other than as herein specified; or sell or assign a majority interest in the **Contractor**; or if

48.1.7 The **Contractor** fails to secure and maintain all required insurance; or if

48.1.8 A receiver or receivers are appointed to take charge of the **Contractor's** property or affairs; or if

48.1.9 The **Commissioner** shall be of the opinion that the **Contractor** is or has been unnecessarily or unreasonably or willfully delaying the performance and completion of the **Work**, or the award of necessary subcontracts, or the placing of necessary material and equipment orders; or if

48.1.10 The **Commissioner** shall be of the opinion that the **Contractor** is or has been willfully or in bad faith violating any of the provisions of this **Contract**; or if

48.1.11 The **Commissioner** shall be of the opinion that the **Work** cannot be completed within the time herein provided therefor or within the time to which such completion may have been extended; provided, however, that the impossibility of timely completion is, in the **Commissioner's** opinion, attributable to conditions within the **Contractor's** control; or if

48.1.12 The **Work** is not completed within the time herein provided therefor or within the time to which the **Contractor** may be entitled to have such completion extended; or if

48.1.13 Any statement or representation of the **Contractor** in the **Contract** or in any document submitted by the **Contractor** with respect to the **Work**, the **Project**, or the **Contract** (or for purposes of securing the **Contract**) was untrue or incorrect when made; or if

48.1.14 The **Contractor** or any of its officers, directors, partners, five (5%) percent shareholders, principals, or other persons substantially involved in its activities, commits any of the acts or omissions specified as the grounds for debarment in the **PPB** Rules.

48.2 Before the **Commissioner** shall exercise his/her right to declare the **Contractor** in default, the **Commissioner** shall give the **Contractor** an opportunity to be heard, upon not less than two (2) **Days** notice.

ARTICLE 49. EXERCISE OF THE RIGHT TO DECLARE DEFAULT

49.1 The right to declare the **Contractor** in default for any of the grounds specified or referred to in Article 48 shall be exercised by sending the **Contractor** a notice, signed by the **Commissioner**, setting forth the ground or grounds upon which such default is declared (hereinafter referred to as a "Notice of Default").

49.2 The **Commissioner's** determination that the **Contractor** is in default shall be conclusive, final, and binding on the parties and such a finding shall preclude the **Contractor** from commencing a plenary action for any damages relating to the **Contract**. If the **Contractor** protests the determination of the **Commissioner**, the **Contractor** may commence an action in a court of competent jurisdiction of the State of New York under Article 78 of the New York Civil Practice Law and Rules.

ARTICLE 50. QUITTING THE SITE

50.1 Upon receipt of such notice the **Contractor** shall immediately discontinue all further operations under this **Contract** and shall immediately quit the **Site**, leaving untouched all plant, materials, equipment, tools, and supplies then on the **Site**.

ARTICLE 51. COMPLETION OF THE WORK

51.1 The **Commissioner**, after declaring the **Contractor** in default, may then have the **Work** completed by such means and in such manner, by contract with or without public letting, or otherwise, as he/she may deem advisable, utilizing for such purpose such of the **Contractor's** plant, materials, equipment, tools, and supplies remaining on the **Site**, and also such **Subcontractors**, as he/she may deem advisable.

51.2 After such completion, the **Commissioner** shall make a certificate stating the expense incurred in such completion, which shall include the cost of re-letting and also the total amount of liquidated damages (at the rate provided for in the **Contract**) from the date when the **Work** should have been completed by the **Contractor** in accordance with the terms hereof to the date of actual completion of the **Work**. Such certificate shall be binding and conclusive upon the **Contractor**, its sureties, and any person claiming under the **Contractor**, as to the amount thereof.

51.3 The expense of such completion, including any and all related and incidental costs, as so certified by the **Commissioner**, and any liquidated damages assessed against the **Contractor**, shall be charged against and deducted out of monies which are earned by the **Contractor** prior to the date of default. Should the expense of such completion, as certified by the **Commissioner**, exceed the total sum which would have been payable under the **Contract** if it had been completed by the **Contractor**, any excess shall be paid by the **Contractor**.

ARTICLE 52. PARTIAL DEFAULT

52.1 In case the **Commissioner** shall declare the **Contractor** in default as to a part of the **Work** only, the **Contractor** shall discontinue such part, shall continue performing the remainder of the **Work** in strict conformity with the terms of this **Contract**, and shall in no way hinder or interfere with any **Other**

Contractor(s) or persons whom the **Commissioner** may engage to complete the **Work** as to which the **Contractor** was declared in default.

52.2 The provisions of this Chapter relating to declaring the **Contractor** in default as to the entire **Work** shall be equally applicable to a declaration of partial default, except that the **Commissioner** shall be entitled to utilize for completion of the part of the **Work** as to which the **Contractor** was declared in default only such plant, materials, equipment, tools, and supplies as had been previously used by the **Contractor** on such part.

ARTICLE 53. PERFORMANCE OF UNCOMPLETED WORK

53.1 In completing the whole or any part of the **Work** under the provisions of this Chapter X, the **Commissioner** shall have the power to depart from or change or vary the terms and provisions of this **Contract**, provided, however, that such departure, change or variation is made for the purpose of reducing the time or expense of such completion. Such departure, change or variation, even to the extent of accepting a lesser or different performance, shall not affect the conclusiveness of the **Commissioner's** certificate of the cost of completion referred to in Article 51, nor shall it constitute a defense to an action to recover the amount by which such certificate exceeds the amount which would have been payable to the **Contractor** hereunder but for its default.

ARTICLE 54. OTHER REMEDIES

54.1 In addition to the right to declare the **Contractor** in default pursuant to this Chapter X, the **Commissioner** shall have the absolute right, in his/her sole discretion and without a hearing, to complete or cause to be completed in the same manner as described in Articles 51 and 53, any or all unsatisfactory or uncompleted punch list **Work** that remains after the completion date specified in the **Final Approved Punch List**. A written notice of the exercise of this right shall be sent to the **Contractor** who shall immediately quit the **Site** in accordance with the provisions of Article 50.

54.2 The expense of completion permitted under Article 54.1, including any and all related and incidental costs, as so certified by the **Commissioner**, shall be charged against and deducted out of monies which have been earned by the **Contractor** prior to the date of the exercise of the right set forth in Article 54.1; the balance of such monies, if any, subject to the other provisions of this **Contract**, to be paid to the **Contractor** without interest after such completion. Should the expense of such completion, as certified by the **Commissioner**, exceed the total sum which would have been payable under the **Contract** if it had been completed by the **Contractor**, any excess shall be paid by the **Contractor**.

54.3 The previous provisions of this Chapter X shall be in addition to any and all other remedies available under **Law** or in equity.

54.4 The exercise by the **City** of any remedy set forth herein shall not be deemed a waiver by the **City** of any other legal or equitable remedy contained in this **Contract** or provided under **Law**.

CHAPTER XI
MISCELLANEOUS PROVISIONS

ARTICLE 55. CONTRACTOR'S WARRANTIES

55.1 In consideration of, and to induce, the award of this **Contract** to the **Contractor**, the **Contractor** represents and warrants:

55.1.1 That it is financially solvent, sufficiently experienced and competent to perform the **Work**; and

55.1.2 That the facts stated in its bid and the information given by it pursuant to the Information for Bidders is true and correct in all respects; and

55.1.3 That it has read and complied with all requirements set forth in the **Contract**.

ARTICLE 56. CLAIMS AND ACTIONS THEREON

56.1 Any claim, that is not subject to dispute resolution under the **PPB** Rules or this **Contract**, against the **City** for damages for breach of **Contract** shall not be made or asserted in any action, unless the **Contractor** shall have strictly complied with all requirements relating to the giving of notice and of information with respect to such claims, as herein before provided.

56.2 Nor shall any action be instituted or maintained on any such claims unless such action is commenced within six (6) months after **Substantial Completion**; except that:

56.2.1 Any claims arising out of events occurring after **Substantial Completion** and before **Final Acceptance** of the **Work** shall be asserted within six (6) months of **Final Acceptance** of the **Work**;

56.2.2 Any claims for monies deducted, retained or withheld under the provisions of this **Contract** shall be asserted within six (6) months after the date when such monies otherwise become due and payable hereunder; and

56.2.3 If the **Commissioner** exercises his/her right to terminate the **Contract** pursuant to Article 64, any such action shall be commenced within six (6) months of the date the **Commissioner** exercises said right.

ARTICLE 57. INFRINGEMENT

57.1 The **Contractor** shall be solely responsible for and shall defend, indemnify, and hold the **City** harmless from any and all claims (even if the allegations of the lawsuit are without merit) and judgments for damages and from costs and expenses to which the **City** may be subject to or which it may suffer or incur allegedly arising out of or in connection with any infringement by the **Contractor** of any copyright, trade secrets, trademark or patent rights or any other property or personal right of any third party by the **Contractor** and/or its **Subcontractors** in the performance or completion of the **Work**. Insofar as the facts or **Law** relating to any claim would preclude the **City** from being completely indemnified by the **Contractor**, the **City** shall be partially indemnified by the **Contractor** to the fullest extent permitted by **Law**.

ARTICLE 58. NO CLAIM AGAINST OFFICIALS, AGENTS OR EMPLOYEES

58.1 No claim whatsoever shall be made by the **Contractor** against any official, agent or employee of the **City** for, or on account of, anything done or omitted to be done in connection with this **Contract**.

ARTICLE 59. SERVICE OF NOTICES

59.1 The **Contractor** hereby designates the business address, fax number, and email address specified in its bid, as the place where all notices, directions or other communications to the **Contractor** may be delivered, or to which they may be mailed. Any notice, direction, or communication from either party to the other shall be in writing and shall be deemed to have been given when (i) delivered personally; (ii) sent by certified mail, return receipt requested; (iii) delivered by overnight or same day courier service in a properly addressed envelope with confirmation; or (iv) sent by fax or email and, unless receipt of the fax or e-mail is acknowledged by the recipient by fax or e-mail, deposited in a post office box regularly maintained by the United States Postal Service in a properly addressed, postage pre-paid envelope.

59.2 **Contractor's** notice address, email address, or fax number may be changed at any time by an instrument in writing, executed and acknowledged by the **Contractor**, and delivered to the **Commissioner**.

59.3 Nothing herein contained shall, however, be deemed to preclude or render inoperative the service of any notice, direction or other communication upon the **Contractor** personally, or, if the **Contractor** is a corporation, upon any officer thereof.

ARTICLE 60. UNLAWFUL PROVISIONS DEEMED STRICKEN FROM CONTRACT

60.1 If this **Contract** contains any unlawful provision not an essential part of the **Contract** and which shall not appear to have been a controlling or material inducement to the making thereof, the same shall be deemed of no effect and shall, upon notice by either party, be deemed stricken from the **Contract** without affecting the binding force of the remainder.

ARTICLE 61. ALL LEGAL PROVISIONS DEEMED INCLUDED

61.1 It is the intent and understanding of the parties to this **Contract** that each and every provision of **Law** required to be inserted in this **Contract** shall be and is inserted herein. Furthermore, it is hereby stipulated that every such provision is to be deemed to be inserted herein, and if, through mistake or otherwise, any such provision is not inserted, or is not inserted in correct form, then this **Contract** shall forthwith upon the application of either party be amended by such insertion so as to comply strictly with the **Law** and without prejudice to the rights of either party hereunder.

ARTICLE 62. TAX EXEMPTION

62.1 The **City** is exempt from payment of Federal, State, and local taxes, including sales and compensating use taxes of the State of New York and its cities and counties on all tangible personal property sold to the **City** pursuant to the provisions of this **Contract**. These taxes are not to be included in bids. However, this exemption does not apply to tools, machinery, equipment or other property leased by or to the **Contractor**, **Subcontractor** or **Materialman** or to tangible personal property which, even

though it is consumed, is not incorporated into the completed **Work** (consumable supplies) and tangible personal property that the **Contractor** is required to remove from the **Site** during or upon completion of the **Work**. The **Contractor** and its **Subcontractors** and **Materialmen** shall be responsible for and pay any and all applicable taxes, including sales and compensating use taxes, on such leased tools, machinery, equipment or other property and upon all such consumable supplies and tangible personal property that the **Contractor** is required to remove from the **Site** during or upon completion of the **Work**.

62.2 The **Contractor** agrees to sell and the **City** agrees to purchase all tangible personal property, other than consumable supplies and other tangible personal property that the **Contractor** is required to remove from the **Site** during or upon completion of the **Work**, that is required, necessary or proper for or incidental to the construction of the **Project** covered by this **Contract**. The sum paid under this **Contract** for such tangible personal property shall be in full payment and consideration for the sale of such tangible personal property.

62.2.1 The **Contractor** agrees to construct the **Project** and to perform all **Work**, labor and services rendered, necessary, proper or incidental thereto for the sum shown in the bid for the performance of such **Work**, labor, and services, and the sum so paid pursuant to this **Contract** for such **Work**, labor, and services, shall be in full consideration for the performance by the **Contractor** of all its duties and obligations under this **Contract** in connection with said **Work,** labor, and services.

62.3 20 NYCRR Section 541.3(d) provides that a **Contractor**'s purchases of tangible personal property that is either incorporated into real property owned by a governmental entity or purchased for and sold to a governmental entity are exempt from sales and use tax. The **City** shall not pay sales tax for any such tangible personal property that it purchases from the **Contractor** pursuant to the **Contract.** With respect to such tangible personal property, the **Contractor**, at the request of the **City**, shall furnish to the **City** such bills of sale and other instruments as may be required by the **City**, properly executed, acknowledged and delivered assuring to the **City** title to such tangible personal property, free of liens and/or encumbrances, and the **Contractor** shall mark or otherwise identify all such tangible personal property as the property of the **City**.

62.4 Title to all tangible personal property to be sold by the **Contractor** to the **City** pursuant to the provisions of the **Contract** shall immediately vest in and become the sole property of the **City** upon delivery of such tangible personal property to the **Site**. Notwithstanding such transfer of title, the **Contractor** shall have the full and continuing responsibility to install such tangible personal property in accordance with the provisions of this **Contract**, protect it, maintain it in a proper condition and forthwith repair, replace and make good any damage thereto, theft or disappearance thereof, and furnish additional tangible personal property in place of any that may be lost, stolen or rendered unusable, without cost to the **City**, until such time as the **Work** covered by the **Contract** is fully accepted by the **City**. Such transfer of title shall in no way affect any of the **Contractor's** obligations hereunder. In the event that, after title has passed to the **City**, any of the tangible personal property is rejected as being defective or otherwise unsatisfactory, title to all such tangible personal property shall be deemed to have been transferred back to the **Contractor**.

62.5 The purchase by **Subcontractors** or **Materialmen** of tangible personal property to be sold hereunder shall be a purchase or procurement for resale to the **Contractor** (either directly or through other **Subcontractors**) and therefore not subject to the aforesaid sales and compensating use taxes, provided that the subcontracts and purchase agreements provide for the resale of such tangible personal property and that such subcontracts and purchase agreements are in a form similar to this **Contract** with respect to the separation of the sale of consumable supplies and tangible personal property that the **Contractor** is required to remove from the **Site** during or upon completion of the **Work** from the **Work** and labor, services, and any other matters to be provided, and provided further that the subcontracts and

purchase agreements provide separate prices for tangible personal property and all other services and matters. Such separation shall actually be followed in practice, including the separation of payments for tangible personal property from the payments for other **Work** and labor and other things to be provided.

62.6 The **Contractor** and its **Subcontractors** and **Materialmen** shall furnish a **Contractor** Exempt Purchase Certificate to all persons, firms or corporations from which they purchase tangible personal property for the performance of the **Work** covered by this **Contract**.

62.7 In the event any of the provisions of this Article 62 shall be deemed to be in conflict with any other provisions of this **Contract** or create any ambiguity, then the provisions of this Article 62 shall control.

ARTICLE 63. INVESTIGATION(S) CLAUSE

63.1 The parties to this **Contract** agree to cooperate fully and faithfully with any investigation, audit or inquiry conducted by a United States, a State of New York (State) or a **City** governmental agency or authority that is empowered directly or by designation to compel the attendance of witnesses and to examine witnesses under oath, or conducted by the Inspector General of a governmental agency that is a party in interest to the transaction, submitted bid, submitted proposal, contract, lease, permit or license that is the subject of the investigation, audit or inquiry.

63.2 If any person who has been advised that his/her statement, and any information from such statement, will not be used against him/her in any subsequent criminal proceeding refuses to testify before a grand jury or other governmental agency or authority empowered directly or by designation to compel the attendance of witnesses and to examine witnesses under oath concerning the award of or performance under any transaction, agreement, lease, permit, contract, or license entered into with the **City**, the State, or any political subdivision or public authority thereof, or the Port Authority of New York and New Jersey, or any local development corporation within the **City**, or any public benefit corporation organized under the **Laws** of the State of New York, or;

63.3 If any person refuses to testify for a reason other than the assertion of his/her privilege against self incrimination in an investigation, audit or inquiry conducted by a **City** or State governmental agency or authority empowered directly or by designation to compel the attendance of witnesses and to take testimony under oath, or by the Inspector General of the governmental agency that is a party in interest in, and is seeking testimony concerning the award of, or performance under any transaction, agreement, lease, permit, contract, or license entered into with the **City**, the State, or any political subdivision thereof or any local development corporation within the **City**, then;

63.4 The **Commissioner** whose **Agency** is a party in interest to the transaction, submitted bid, submitted proposal, contract, lease, permit, or license shall convene a hearing, upon not less than five (5) **Days**' written notice to the parties involved to determine if any penalties should attach for the failure of a person to testify.

63.5 If any non-governmental party to the hearing requests an adjournment, the **Commissioner** who convened the hearing may, upon granting the adjournment, suspend any contract, lease, permit, or license, pending the final determination pursuant to Article 63.7 without the **City** incurring any penalty or damages for delay or otherwise.

63.6 The penalties which may attach after a final determination by the **Commissioner** may include but shall not exceed:

63.6.1 The disqualification for a period not to exceed five (5) years from the date of an adverse determination for any person, or any entity of which such person was a member at the time the testimony was sought, from submitting bids for, or transacting business with, or entering into or obtaining any contract, lease, permit or license with or from the **City**; and/or

63.6.2 The cancellation or termination of any and all such existing **City** contracts, leases, permits or licenses that the refusal to testify concerns and that have not been assigned as permitted under this **Contract**, nor the proceeds of which pledged, to an unaffiliated and unrelated institutional lender for fair value prior to the issuance of the notice scheduling the hearing, without the **City** incurring any penalty or damages on account of such cancellation or termination; monies lawfully due for goods delivered, work done, rentals, or fees accrued prior to the cancellation or termination shall be paid by the **City**.

63.7 The **Commissioner** shall consider and address in reaching his/her determination and in assessing an appropriate penalty the factors in Articles 63.7.1 and 63.7.2. The **Commissioner** may also consider, if relevant and appropriate, the criteria established in Articles 63.7.3 and 63.7.4, in addition to any other information which may be relevant and appropriate:

63.7.1 The party's good faith endeavors or lack thereof to cooperate fully and faithfully with any governmental investigation or audit, including but not limited to the discipline, discharge, or disassociation of any person failing to testify, the production of accurate and complete books and records, and the forthcoming testimony of all other members, agents, assignees or fiduciaries whose testimony is sought.

63.7.2 The relationship of the person who refused to testify to any entity that is a party to the hearing, including but not limited to, whether the person whose testimony is sought has an ownership interest in the entity and/or the degree of authority and responsibility the person has within the entity.

63.7.3 The nexus of the testimony sought to the subject entity and its contracts, leases, permits or licenses with the **City**.

63.7.4 The effect a penalty may have on an unaffiliated and unrelated party or entity that has a significant interest in an entity subject to penalties under Article 63.6, provided that the party or entity has given actual notice to the **Commissioner** upon the acquisition of the interest, or at the hearing called for in Article 63.4, gives notice and proves that such interest was previously acquired. Under either circumstance the party or entity shall present evidence at the hearing demonstrating the potential adverse impact a penalty will have on such person or entity.

63.8 Definitions:

63.8.1 The term "license" or "permit" as used in this Article 63 shall be defined as a license, permit, franchise or concession not granted as a matter of right.

63.8.2 The term "person" as used in this Article 63 shall be defined as any natural person doing business alone or associated with another person or entity as a partner, director, officer, principal or employee.

63.8.3 The term "entity" as used in this Article 63 shall be defined as any firm, partnership, corporation, association, joint venture, or person that receives monies, benefits, licenses, leases, or permits from or through the **City** or otherwise transacts business with the **City**.

63.8.4 The term "member" as used in this Article 63 shall be defined as any person associated with another person or entity as a partner, director, officer, principal or employee.

63.9 In addition to and notwithstanding any other provision of this **Contract**, the **Commissioner** may in his/her sole discretion terminate this **Contract** upon not less than three (3) **Days'** written notice in the event the **Contractor** fails to promptly report in writing to the **Commissioner** of the Department of Investigations ("DOI") of the **City** any solicitation of money, goods, requests for future employment or other benefit or thing of value, by or on behalf of any employee of the **City** or other person, firm, corporation or entity for any purpose which may be related to the procurement or obtaining of this **Contract** by the **Contractor**, or affecting the performance of this **Contract**.

ARTICLE 64. TERMINATION BY THE CITY

64.1 In addition to termination pursuant to any other article of this **Contract**, the **Commissioner** may, at any time, terminate this **Contract** by written notice to the **Contractor**. In the event of termination, the **Contractor** shall, upon receipt of such notice, unless otherwise directed by the **Commissioner**:

64.1.1 Stop **Work** on the date specified in the notice;

64.1.2 Take such action as may be necessary for the protection and preservation of the **City's** materials and property;

64.1.3 Cancel all cancelable orders for material and equipment;

64.1.4 Assign to the **City** and deliver to the **Site** or another location designated by the **Commissioner**, any non-cancelable orders for material and equipment that is not capable of use except in the performance of this **Contract** and has been specifically fabricated for the sole purpose of this **Contract** and not incorporated in the **Work**;

64.1.5 Take no action which will increase the amounts payable by the **City** under this **Contract**.

64.2 In the event of termination by the **City** pursuant to this Article 64, payment to the **Contractor** shall be in accordance with Articles 64.2.1, 64.2.2 or 64.2.3, to the extent that each respective article applies.

64.2.1 Lump Sum Contracts or Items: On all lump sum **Contracts**, or on lump sum items in a **Contract**, the **City** will pay the **Contractor** the sum of the amounts described in Articles 64.2.1(a) and 64.2.1(b), less all payments previously made pursuant to this **Contract**. On lump sum **Contracts** only, the **City** will also pay the **Contractor** an additional sum as provided in Article 64.2.1(c).

64.2.1(a) For **Work** completed prior to the notice of termination, the **Contractor** shall be paid a pro rata portion of the lump sum bid amount, plus approved change orders, based upon the percent completion of the **Work**, as determined by the **Commissioner**. For the purpose of determining the pro rata portion of the lump sum bid amount to which the **Contractor** is entitled, the bid breakdown submitted in accordance with Article 41 shall be considered, but shall not be dispositive. The **Commissioner's** determination hereunder shall be final, binding, and conclusive.

64.2.1(b) For non-cancelable material and equipment that is not capable of use except in the performance of this **Contract** and has been specifically fabricated for the sole purpose of this **Contract**, but not yet incorporated in the **Work**, the **Contractor** shall be paid the lesser of the following, less salvage value:

64.2.1(b)(i) The Direct Cost, as defined in Article 64.2.4; or

64.2.1(b)(ii) The fair and reasonable value, if less than Direct Cost, of such material and equipment, plus necessary and reasonable delivery costs.

64.2.1(b)(iii) In addition, the **Contractor** shall be paid five (5%) percent of the amount described in Article 64.2.1(b)(i) or Article 64.2.1(b)(ii), whichever applies.

64.2.1(c) Except as otherwise provided in Article 64.2.1(d), on all lump sum **Contracts**, the **Contractor** shall be paid the percentage indicated below applied to the difference between the total lump sum bid amount and the total of all payments made prior to the notice of termination plus all payments allowed pursuant to Articles 64.2.1(a) and 64.2.1(b):

64.2.1(c)(i) Five (5%) percent of the first five million ($5,000,000) dollars; and

64.2.1(c)(ii) Three (3%) percent of any amount between five million ($5,000,000) dollars and fifteen million ($15,000,000) dollars; plus

64.2.1(c)(iii) One (1%) percent of any amount over fifteen million ($15,000,000) dollars.

64.2.1(d) In the event the **City** terminates a lump sum **Contract** pursuant to this Article 64 within ninety (90) **Days** after registration of the **Contract** with the **Comptroller**, the **Contractor** shall be paid one (1%) percent of the difference between the lump sum bid amount and the total of all payments made pursuant to this Article 64.2.

64.2.2 Unit Price Contracts or Items: On all unit price **Contracts**, or on unit price items in a **Contract**, the **City** will pay the **Contractor** the sum of the amounts described in Articles 64.2.2(a) and 64.2.2(b), less all payments previously made pursuant to this **Contract**:

64.2.2(a) For all completed units, the unit price stated in the **Contract**, and

64.2.2(b) For units that have been ordered but are only partially completed, the **Contractor** will be paid:

64.2.2(b)(i) A pro rata portion of the unit price stated in the **Contract** based upon the percent completion of the unit and

64.2.2(b)(ii) For non-cancelable material and equipment, payment will be made pursuant to Article 64.2.1(b).

64.2.3 Time and Materials Contracts or Items Based on Time and Material Records: On all **Contracts** or items in a **Contract** where payment for the **Work** is based on time and

material records, the **Contractor** shall be paid in accordance with Article 26, less all payments previously made pursuant to this **Contract**.

64.2.4 Direct Costs: Direct Costs as used in this Article 64.2 shall mean:

64.2.4(a) The actual purchase price of material and equipment, plus necessary and reasonable delivery costs,

64.2.4(b) The actual cost of labor involved in construction and installation at the **Site**, and

64.2.4(c) The actual cost of necessary bonds and insurance purchased pursuant to requirements of this **Contract** less any amounts that have been or should be refunded by the **Contractor's** sureties or insurance carriers.

64.2.4(d) Direct Costs shall not include overhead.

64.3 In no event shall any payments under this Article 64 exceed the **Contract** price for such items.

64.4 All payments pursuant to Article 64 shall be in the nature of liquidated damages and shall be accepted by the **Contractor** in full satisfaction of all claims against the **City**.

64.5 The **City** may deduct or set off against any sums due and payable pursuant to this Article 64, any deductions authorized by this **Contract** or by **Law** (including but not limited to liquidated damages) and any claims it may have against the **Contractor**. The **City's** exercise of the right to terminate the **Contract** pursuant to this Article 64 shall not impair or otherwise effect the **City's** right to assert any claims it may have against the **Contractor** in a plenary action.

64.6 Where the **Work** covered by the **Contract** has been substantially completed, as determined in writing by the **Commissioner**, termination of the **Work** shall be handled as an omission of **Work** pursuant to Articles 29 and 33, in which case a change order will be issued to reflect an appropriate reduction in the **Contract** sum, or if the amount is determined after final payment, such amount shall be paid by the **Contractor**.

ARTICLE 65. CHOICE OF LAW, CONSENT TO JURISDICTION AND VENUE

65.1 This **Contract** shall be deemed to be executed in the **City** regardless of the domicile of the **Contractor**, and shall be governed by and construed in accordance with the **Laws** of the State of New York and the **Laws** of the United States, where applicable.

65.2 The parties agree that any and all claims asserted against the **City** arising under this **Contract** or related thereto shall be heard and determined in the courts of the State of New York ("New York State Courts") located in the **City** and County of New York. To effect this **Contract** and intent, the **Contractor** agrees:

65.2.1 If the **City** initiates any action against the **Contractor** in Federal court or in a New York State Court, service of process may be made on the **Contractor** either in person, wherever such **Contractor** may be found, or by registered mail addressed to the **Contractor** at its address as set forth in this **Contract**, or to such other address as the **Contractor** may provide to the **City** in writing; and

65.2.2 With respect to any action between the **City** and the **Contractor** in a New York State Court, the **Contractor** hereby expressly waives and relinquishes any rights it might otherwise have:

65.2.2(a) To move to dismiss on grounds of forum non conveniens;

65.2.2(b) To remove to Federal Court; and

65.2.2(c) To move for a change of venue to a New York State Court outside New York County.

65.2.3 With respect to any action brought by the **City** against the **Contractor** in a Federal Court located in the **City**, the **Contractor** expressly waives and relinquishes any right it might otherwise have to move to transfer the action to a Federal Court outside the **City**.

65.2.4 If the **Contractor** commences any action against the **City** in a court located other than in the **City** and County of New York, upon request of the **City**, the **Contractor** shall either consent to a transfer of the action to a New York State Court of competent jurisdiction located in the **City** and County of New York or, if the Court where the action is initially brought will not or cannot transfer the action, the **Contractor** shall consent to dismiss such action without prejudice and may thereafter reinstate the action in a New York State Court of competent jurisdiction in New York County.

65.3 If any provision(s) of this Article 65 is held unenforceable for any reason, each and all other provision(s) shall nevertheless remain in full force and effect.

ARTICLE 66. PARTICIPATION IN AN INTERNATIONAL BOYCOTT

66.1 The **Contractor** agrees that neither the **Contractor** nor any substantially owned affiliated company is participating or shall participate in an international boycott in violation of the provisions of the Federal Export Administration Act of 1979, as amended, or the regulations of the United States Department of Commerce (Commerce Department) promulgated thereunder.

66.2 Upon the final determination by the Commerce Department or any other agency of the United States as to, or conviction of the **Contractor** or a substantially-owned affiliated company thereof for participation in an international boycott in violation of the provisions of the Export Administration Act of 1979, as amended, or the regulations promulgated thereunder, the **Comptroller** may, at his/her option, render forfeit and void this **Contract**.

66.3 The **Contractor** shall comply in all respects, with the provisions of Section 6-114 of the Administrative Code and the rules and regulations issued by the **Comptroller** thereunder.

ARTICLE 67. LOCALLY BASED ENTERPRISE PROGRAM

67.1 This **Contract** is subject to the requirements of Section 6-108.1 of the Administrative Code and regulations promulgated thereunder. No construction contract shall be awarded unless and until these requirements have been complied with in their entirety; however, compliance with this Article 67 is not required if the Agency sets Subcontractor Participation Goals for Minority- and Women-Owned Business Enterprises (M/WBEs).

67.2 Unless specifically waived by the **Commissioner** with the approval of the Division of Economic and Financial Opportunity of the **City** Department of Business Services, if any portion of the **Contract** is subcontracted, not less than ten (10%) percent of the total dollar amount of the **Contract** shall be awarded to locally based enterprises (LBEs); except that where less than ten (10%) percent of the total dollar amount of the **Contract** is subcontracted, such lesser percentage shall be so awarded.

67.3 The **Contractor** shall not require performance and payment bonds from LBE **Subcontractors.**

67.4 If the **Contractor** has indicated prior to award that no **Work** will be subcontracted, no **Work** shall be subcontracted without the prior approval of the **Commissioner**, which shall be granted only if the **Contractor** makes a good faith effort beginning at least six (6) weeks before the **Work** is to be performed to obtain LBE **Subcontractors** to perform the **Work.**

67.5 If the **Contractor** has not identified sufficient LBE **Subcontractors** prior to award, it shall sign a letter of compliance stating that it complies with Section 6-108.1 of the Administrative Code, recognizes that achieving the LBE requirement is a condition of its **Contract**, and shall submit documentation demonstrating its good faith efforts to obtain LBEs. After award, the **Contractor** shall begin to solicit LBE's to perform subcontracted **Work** at least six (6) weeks before the date such **Work** is to be performed and shall demonstrate that a good faith effort has been made to obtain LBEs on each subcontract until it meets the required percentage.

67.6 Failure of the **Contractor** to comply with the requirements of Section 6-108.1 of the Administrative Code and the regulations promulgated thereunder shall constitute a material breach of this **Contract**. Remedy for such breach may include the imposition of any or all of the following sanctions:

67.6.1 Reducing the **Contractor's** compensation by an amount equal to the dollar value of the percentage of the LBE subcontracting requirement not complied with;

67.6.2 Declaring the **Contractor** in default;

67.6.3 If the **Contractor** is an LBE, de-certifying and declaring the **Contractor** ineligible to participate in the LBE program for a period of up to three (3) years.

ARTICLE 68. ANTITRUST

68.1 The **Contractor** hereby assigns, sells, and transfers to the **City** all right, title, and interest in and to any claims and causes of action arising under the antitrust **Laws** of New York State or of the United States relating to the particular goods or services purchased or procured by the **City** under this **Contract.**

ARTICLE 69. MacBRIDE PRINCIPLES PROVISIONS

69.1 Notice To All Prospective **Contractors**:

69.1.1 Local Law No. 34 of 1991 became effective on September 10, 1991 and added Section 6-115.1 of the Administrative Code. The local **Law** provides for certain restrictions on **City Contracts** to express the opposition of the people of the **City** to employment discrimination practices in Northern Ireland to promote freedom of work-place opportunity.

69.1.2 Pursuant to Section 6-115.1, prospective **Contractors** for **Contracts** to provide goods or services involving an expenditure of an amount greater than ten thousand

($10,000.) dollars, or for construction involving an amount greater than fifteen thousand ($15,000.) dollars, are asked to sign a rider in which they covenant and represent, as a material condition of their **Contract**, that any business operations in Northern Ireland conducted by the **Contractor** and any individual or legal entity in which the **Contractor** holds a ten (10%) percent or greater ownership interest in the **Contractor** will be conducted in accordance with the MacBride Principles of nondiscrimination in employment.

69.1.3 Prospective **Contractors** are not required to agree to these conditions. However, in the case of **Contracts** let by competitive sealed bidding, whenever the lowest responsible bidder has not agreed to stipulate to the conditions set forth in this notice and another bidder who has agreed to stipulate to such conditions has submitted a bid within five (5%) percent of the lowest responsible bid for a **Contract** to supply goods, services or contraction of comparable quality, the **Agency** shall refer such bids to the Mayor, the Speaker or other officials, as appropriate, who may determine, in accordance with applicable **Law**, that it is in the best interest of the **City** that the **Contract** be awarded to other than the lowest responsible pursuant to Section 313(b)(2) of the **City** Charter.

69.1.4 In the case of **Contracts** let by other than competitive sealed bidding, if a prospective **Contractor** does not agree to these conditions, no **Agency**, elected official or the **City** Council shall award the **Contract** to that bidder unless the **Agency** seeking to use the goods, services or construction certifies in writing that the **Contract** is necessary for the **Agency** to perform its functions and there is no other responsible **Contractor** who will supply goods, services or construction of comparable quality at a comparable price.

69.2 In accordance with Section 6-115.1 of the Administrative Code, the **Contractor** stipulates that such **Contractor** and any individual or legal entity in which the **Contractor** holds a ten (10%) percent or greater ownership interest in the **Contractor** either:

69.2.1 Have no business operations in Northern Ireland, or

69.2.2 Shall take lawful steps in good faith to conduct any business operations they have in Northern Ireland in accordance with the MacBride Principles, and shall permit independent monitoring of their compliance with such principles.

69.3 For purposes of this Article, the following terms shall have the following meanings:

69.3.1 "MacBride Principles" shall mean those principles relating to nondiscrimination in employment and freedom of work-place opportunity which require employers doing business in Northern Ireland to:

69.3.1(a) increase the representation of individuals from under-represented religious groups in the workforce, including managerial, supervisory, administrative, clerical and technical jobs;

69.3.1(b) take steps to promote adequate security for the protection of employees from under-represented religious groups both at the work-place and while traveling to and from **Work**;

69.3.1(c) ban provocative religious or political emblems from the workplace;

69.3.1(d) publicly advertise all job openings and make special recruitment efforts to attract applicants from under-represented religious groups;

69.3.1(e) establish layoff, recall, and termination procedures which do not in practice favor a particular religious group;

69.3.1(f) abolish all job reservations, apprenticeship restrictions and different employment criteria which discriminate on the basis of religion;

69.3.1(g) develop training programs that will prepare substantial numbers of current employees from under-represented religious groups for skilled jobs, including the expansion of existing programs and the creation of new programs to train, upgrade, and improve the skills of workers from under-represented religious groups;

69.3.1(h) establish procedures to asses, identify, and actively recruit employees from under-represented religious groups with potential for further advancement; and

69.3.1(i) appoint a senior management staff member to oversee affirmative action efforts and develop a timetable to ensure their full implementation.

69.4 The **Contractor** agrees that the covenants and representations in Article 69.2 are material conditions to this **Contract**. In the event the **Agency** receives information that the **Contractor** who made the stipulation required by this Article 69 is in violation thereof, the **Agency** shall review such information and give the **Contractor** an opportunity to respond. If the **Agency** finds that a violation has occurred, the **Agency** shall have the right to declare the **Contractor** in default in default and/or terminate this **Contract** for cause and procure supplies, services or **Work** from another source in the manner the **Agency** deems proper. In the event of such termination, the **Contractor** shall pay to the **Agency**, or the **Agency** in its sole discretion may withhold from any amounts otherwise payable to the **Contractor**, the difference between the **Contract** price for the uncompleted portion of this **Contract** and the cost to the **Agency** of completing performance of this **Contract** either itself or by engaging another **Contractor** or **Contractors**. In the case of a requirement **Contract**, the **Contractor** shall be liable for such difference in price for the entire amount of supplies required by the **Agency** for the uncompleted term of **Contractor's Contract**. In the case of a construction **Contract**, the **Agency** shall also have the right to hold the **Contractor** in partial or total default in accordance with the default provisions of this **Contract**, and/or may seek debarment or suspension of the **Contractor**. The rights and remedies of the **Agency** hereunder shall be in addition to, and not in lieu of, any rights and remedies the **Agency** has pursuant to this **Contract** or by operation of **Law**.

ARTICLE 70. ELECTRONIC FILING/NYC DEVELOPMENT HUB

70.1 The **Contractor** shall electronically file all alteration type-2 and alteration type-3 applications via the New York City Development Hub Web site, except applications for the following types of minor alterations: enlargements, curb cuts, legalizations, fire alarms, builders pavement plans, and jobs filed on Landmark Preservation Commission calendared properties. All such filings must be professionally certified. Information about electronic filing via the New York City Development Hub is available on the **City** Department of Buildings Web site at www.nyc.gov/buildings.

ARTICLE 71. PROHIBITION OF TROPICAL HARDWOODS

71.1 Tropical hardwoods, as defined in Section 165 of the New York State Finance Law (Finance Law), shall not be utilized in the performance of this **Contract** except as expressly permitted by Section 165 of the Finance Law.

ARTICLE 72. CONFLICTS OF INTEREST

72.1 Section 2604 of the **City** Charter and other related provisions of the **City** Charter, the Administrative Code, and the Penal Law are applicable under the terms of this **Contract** in relation to conflicts of interest and shall be extended to **Subcontractors** authorized to perform **Work**, labor and services pursuant to this **Contract** and further, it shall be the duty and responsibility of the **Contractor** to so inform its respective **Subcontractors**. Notice is hereby given that, under certain circumstances, penalties may be invoked against the donor as well as the recipient of any form of valuable gift.

ARTICLE 73. MERGER CLAUSE

73.1 The written **Contract** herein, contains all the terms and conditions agreed upon by the parties hereto, and no other agreement, oral or otherwise, regarding the subject matter of this **Contract** shall be deemed to exist or to bind any of the parties hereto, or to vary any of the terms contained herein.

ARTICLE 74. STATEMENT OF WORK

74.1 The **Contractor** shall furnish all labor and materials and perform all **Work** in strict accordance with the **Specifications** and **Addenda** thereto, numbered 1.

ARTICLE 75. COMPENSATION TO BE PAID TO CONTRACTOR

75.1 The **City** will pay and the **Contractor** will accept in full consideration for the performance of the **Contract**, subject to additions and deductions as provided herein, the total sum of: Thirty Seven Million, Four Hundred thirty two thousand, Six hundred Fourty seven 57/100 Dollars, ($37,432,647.57), this said sum being the amount at which the **Contract** was awarded to the **Contractor** at a public letting thereof, based upon the **Contractor's** bid for the **Contract**.

ARTICLE 76. ELECTRONIC FUNDS TRANSFER

76.1 In accordance with Section 6-107.1 of the Administrative Code, the **Contractor** agrees to accept payments under this **Contract** from the **City** by electronic funds transfer (EFT). An EFT is any transfer of funds, other than a transaction originated by check, draft or similar paper instrument, which is initiated through an electronic terminal, telephonic instrument or computer or magnetic tape so as to order, instruct or authorize a financial institution to debit or credit an account. Prior to the first payment made under this **Contract**, the **Contractor** shall designate one financial institution or other authorized payment agent and shall complete the attached "EFT Vendor Payment Enrollment Form" in order to provide the Commissioner of the **City** Department of Finance with information necessary for the **Contractor** to receive electronic funds transfer payments through a designated financial institution or authorized payment agent. The crediting of the amount of a payment to the appropriate account on the books of a financial institution or other authorized payment agent designated by the **Contractor** shall constitute full satisfaction by the **City** for the amount of the payment under this **Contract**. The account information supplied by the **Contractor** to facilitate the electronic funds transfer shall remain confidential to the fullest extent provided by **Law**.

76.2 The **Commissioner** may waive the application of the requirements of this Article 76 to payments on contracts entered into pursuant to Section 315 of the **City** Charter. In addition, the Commissioner of the Department of Finance and the Comptroller may jointly issue standards pursuant to

which the **Agency** may waive the requirements of this Article 76 for payment in the following circumstances: (i) for individuals or classes of individuals for whom compliance imposes a hardship; (ii) for classifications or types of checks; or (iii) in other circumstances as may be necessary in the interest of the **City**.

ARTICLE 77. RECORDS RETENTION

77.1 The **Contractor** agrees to retain all books, records, and other documents relevant to this **Contract** for six years after the final payment or termination of this **Contract**, whichever is later. **City**, state, and federal auditors and any other persons duly authorized by the **City** shall have full access to and the right to examine any such books, records, and other documents during the retention period.

ARTICLE 78. PARTICIPATION BY MINORITY-OWNED AND WOMEN-OWNED BUSINESS ENTERPRISES IN CITY PROCUREMENT

NOTICE TO ALL PROSPECTIVE CONTRACTORS

ARTICLE I. M/WBE PROGRAM

Local Law No. 129 of 2005 added and Local Law 1 of 2013 amended Section 6-129 of the Administrative Code of the City of New York (hereinafter "Section 6-129"). Section 6-129 establishes the program for participation in City procurement ("M/WBE Program") by minority- owned business enterprises ("MBEs") and women-owned business enterprises ("WBEs"), certified in accordance with Section 1304 of the New York City Charter. As stated in Section 6-129, the intent of the program is to address the impact of discrimination on the City's procurement process, and to promote the public interest in avoiding fraud and favoritism in the procurement process, increasing competition for City business, and lowering contract costs. The contract provisions contained herein are pursuant to Section 6-129, and the rules of the Department of Small Business Services ("DSBS") promulgated thereunder.

If this Contract is subject to the M/WBE Program established by Section 6-129, the specific requirements of MBE and/or WBE participation for this Contract are set forth in Schedule B of the Contract (entitled the "M/WBE Utilization Plan"), and are detailed below. The Contractor must comply with all applicable MBE and WBE requirements for this Contract.

All provisions of Section 6-129 are hereby incorporated in the Contract by reference and all terms used herein that are not defined herein shall have the meanings given such terms in Section 6-129. Article I, Part A, below, sets forth provisions related to the participation goals for construction, standard and professional services contracts. Article I, Part B, below, sets forth miscellaneous provisions related to the M/WBE Program.

PART A

PARTICIPATION GOALS FOR CONSTRUCTION, STANDARD AND PROFESSIONAL SERVICES CONTRACTS OR TASK ORDERS

1. The **MBE and/or WBE Participation Goals** established for this Contract or Task Orders issued pursuant to this Contract, ("**Participation Goals**"), as applicable, are set forth on Schedule B, Part I to this Contract (see Page 1, line 1 Total Participation Goals) or will be set forth on Schedule B, Part I to Task Orders issued pursuant to this Contract, as applicable.

The **Participation Goals** represent a percentage of the total dollar value of the Contract or Task Order, as applicable, that may be achieved by awarding subcontracts to firms certified with New York City Department of Small Business Services as MBEs and/or WBEs, and/or by crediting the participation of prime contractors and/or qualified joint ventures as provided in Section 3 below, unless the goals have been waived or modified by Agency in accordance with Section 6-129 and Part A, Sections 10 and 11 below, respectively.

2. If **Participation Goals** have been established for this Contract or Task Orders issued pursuant to this Contract, Contractor agrees or shall agree as a material term of the Contract that Contractor shall be subject to the **Participation Goals**, unless the goals are waived or modified by Agency in accordance with Section 6-129 and Part A, Sections 10 and 11 below, respectively.

3. If **Participation Goals** have been established for this Contract or Task Order issued pursuant to this Contract, a Contractor that is an MBE and/or WBE shall be permitted to count its own participation toward fulfillment of the relevant **Participation Goal**, provided that in accordance with Section 6-129 the value of Contractor's participation shall be determined by subtracting from the total value of the Contract or Task Order, as applicable, any amounts that the Contractor pays to direct subcontractors (as defined in Section 6-129(c)(13)), and provided further that a Contractor that is certified as both an MBE and a WBE may count its own participation either toward the goal for MBEs or the goal for WBEs, but not both.

A Contractor that is a qualified joint venture (as defined in Section 6-129(c)(30)) shall be permitted to count a percentage of its own participation toward fulfillment of the relevant **Participation Goal**. In accordance with Section 6-129, the value of Contractor's participation shall be determined by subtracting from the total value of the Contract or Task Order, as applicable, any amounts that Contractor pays to direct subcontractors, and then multiplying the remainder by the percentage to be applied to total profit to determine the amount to which an MBE or WBE is entitled pursuant to the joint venture agreement, provided that where a participant in a joint venture is certified as both an MBE and a WBE, such amount shall be counted either toward the goal for MBEs or the goal for WBEs, but not both.

4. A. If **Participation Goals** have been established for this Contract, a prospective contractor shall be required to submit with its bid or proposal, as applicable, a completed Schedule B, M/WBE Utilization Plan, Part II (see Pages 2-4) indicating: (a) whether the contractor is an MBE or WBE, or qualified joint venture; (b) the percentage of work it intends to award to direct subcontractors; and (c) in cases where the contractor intends to award direct subcontracts, a description of the type and dollar value of work designated for participation by MBEs and/or WBEs, and the time frames in which such work is scheduled to begin and end. In the event that this M/WBE Utilization Plan indicates that the bidder or proposer, as applicable, does not intend to meet the **Participation Goals**, the bid or proposal, as applicable, shall be deemed non-responsive, unless Agency has granted the bidder or proposer, as applicable, a pre- award waiver of the Participation Goals in accordance with Section 6-129 and Part A, Section 10 below.

B. (i) If this Contract is for a master services agreement or other requirements type contract that will result in the issuance of Task Orders that will be individually registered ("Master Services Agreement") and is subject to M/WBE **Participation Goals**, a prospective contractor shall be required to submit with its bid or proposal, as applicable, a completed Schedule B, M/WBE Participation Requirements for Master Services Agreements That Will Require Individually Registered Task Orders, Part II (page 2) indicating the prospective contractor's certification and required affirmations to make all reasonable good faith efforts to meet participation goals established on each individual Task Order issued pursuant to this Contract, or if a partial waiver is obtained or such goals are modified by the Agency, to meet the modified **Participation Goals** by soliciting and obtaining the participation of certified MBE and/or WBE firms. In the event that the Schedule B indicates that the bidder or proposer, as applicable, does not intend to meet the **Participation Goals** that may be established on Task Orders issued pursuant to this Contract, the bid or proposal, as applicable, shall be deemed nonresponsive.

(ii) **Participation Goals** on a Master Services Agreement will be established for individual Task Orders issued after the Master Services Agreement is awarded. If **Participation Goals** have been established on a Task Order, a contractor shall be required to submit a Schedule B – M/WBE Utilization Plan For Independently Registered Task Orders That Are Issued Pursuant to Master Services Agreements, Part II (see Pages 2-4) indicating: (a) whether the contractor is an MBE or WBE, or qualified joint venture; (b) the percentage of work it intends to award to direct subcontractors; and (c) in cases where the contractor intends to award direct subcontracts, a description of the type and dollar value of work designated for participation by MBEs and/or WBEs, and the time frames in which such work is scheduled to begin and end. The contractor must engage in good faith efforts to meet the **Participation Goals** as established for the Task Order unless Agency has granted the contractor a pre-award waiver of the Participation Goals in accordance with Section 6-129 and Part A, Section 10 below.

C. THE BIDDER/PROPOSER MUST COMPLETE THE SCHEDULE B INCLUDED HEREIN (SCHEDULE B, PART II). A SCHEDULE B SUBMITTED BY THE BIDDER/PROPOSER WHICH DOES NOT INCLUDE THE VENDOR CERTIFICATION AND REQUIRED AFFIRMATIONS (SEE SECTION V OF PART II) WILL BE DEEMED TO BE NON-RESPONSIVE, UNLESS A FULL WAIVER OF THE PARTICIPATION GOALS IS GRANTED (SCHEDULE B, PART III). IN THE EVENT THAT THE CITY DETERMINES THAT THE BIDDER/PROPOSER HAS SUBMITTED A SCHEDULE B WHERE THE VENDOR CERTIFICATION AND REQUIRED AFFIRMATIONS ARE COMPLETED BUT OTHER ASPECTS OF THE SCHEDULE B ARE NOT COMPLETE, OR CONTAIN A COPY OR COMPUTATION ERROR THAT IS AT ODDS WITH THE VENDOR CERTIFICATION AND AFFIRMATIONS, THE BIDDER/PROPOSER WILL BE NOTIFIED BY THE AGENCY AND WILL BE GIVEN FOUR (4) CALENDAR DAYS FROM RECEIPT OF NOTIFICATION TO CURE THE SPECIFIED DEFICIENCIES AND RETURN A COMPLETED SCHEDULE B TO THE AGENCY. FAILURE TO DO SO WILL RESULT IN A DETERMINATION THAT THE BID/PROPOSAL IS NON-RESPONSIVE. RECEIPT OF NOTIFICATION IS DEFINED AS THE DATE NOTICE IS E-MAILED OR FAXED (IF THE BIDDER/PROPOSER HAS PROVIDED AN E-MAIL ADDRESS OR FAX NUMBER), OR NO LATER THAN FIVE (5) CALENDAR DAYS FROM THE DATE OF MAILING OR UPON DELIVERY, IF DELIVERED.

5. Where an **M/WBE** Utilization Plan has been submitted, the Contractor shall, within 30 days of issuance by Agency of a notice to proceed, submit a list of proposed persons or entities to which it intends to award subcontracts within the subsequent 12 months. In the case of multiyear contracts, such list shall also be submitted every year thereafter. The Agency may also require the Contractor to report periodically about the contracts awarded by its direct subcontractors to indirect subcontractors (as defined in Section 6-129(c)(22)). **PLEASE NOTE: If this Contract is a public works project subject to GML §101(5) (i.e., a contract valued at or below $3M for projects in New York City) or if the Contract is subject to a project labor agreement in accordance with Labor Law §222, and the bidder is required to identify at the time of bid submission its intended subcontractors for the Wicks trades (plumbing and gas fitting; steam heating, hot water heating, ventilating and air conditioning (HVAC); and electric wiring), the Contractor must identify all those to which it intends to award construction subcontracts for any portion of the Wicks trade work at the time of bid submission, regardless of what point in the life of the contract such subcontracts will occur. In identifying intended subcontractors in the bid submission, bidders may satisfy any Participation Goals established for this Contract by proposing one or more subcontractors that are MBEs and/or WBEs for any portion of the Wicks trade work.** In the event that the Contractor's selection of a subcontractor is disapproved, the Contractor shall have a reasonable time to propose alternate subcontractors.

6. MBE and WBE firms must be certified by DSBS in order for the Contractor to credit such firms' participation toward the attainment of the **Participation Goals**. Such certification must occur prior to the

firms' commencement of work. A list of MBE and WBE firms may be obtained from the DSBS website at www.nyc.gov/buycertified, by emailing DSBS at buyer@sbs.nyc.gov, by calling (212) 513-6356, or by visiting or writing DSBS at 110 William St., New York, New York, 10038, 7th floor. Eligible firms that have not yet been certified may contact DSBS in order to seek certification by visiting www.nyc.gov/getcertified, emailing MWBE@sbs.nyc.gov, or calling the DSBS certification helpline at (212) 513-6311. A firm that is certified as both an MBE and a WBE may be counted either toward the goal for MBEs or the goal for WBEs, but not both. No credit shall be given for participation by a graduate MBE or graduate WBE, as defined in Section 6-129(c)(20).

7. Where an **M/WBE** Utilization Plan has been submitted, the Contractor shall, with each voucher for payment, and/or periodically as Agency may require, submit statements, certified under penalty of perjury, which shall include, but not be limited to,: the total amount the Contractor paid to its direct subcontractors, and, where applicable pursuant to Section 6-129(j), the total amount direct subcontractors paid to indirect subcontractors; the names, addresses and contact numbers of each MBE or WBE hired as a subcontractor by the Contractor, and, where applicable, hired by any of the Contractor's direct subcontractors; and the dates and amounts paid to each MBE or WBE. The Contractor shall also submit, along with its voucher for final payment: the total amount it paid to subcontractors, and, where applicable pursuant to Section 6-129(j), the total amount its direct subcontractors paid directly to their indirect subcontractors; and a final list, certified under penalty of perjury, which shall include the name, address and contact information of each subcontractor that is an MBE or WBE, the work performed by, and the dates and amounts paid to each.

8. If payments made to, or work performed by, MBEs or WBEs are less than the amount specified in the Contractor's **M/WBE** Utilization Plan, Agency shall take appropriate action, in accordance with Section 6-129 and Article II below, unless the Contractor has obtained a modification of its **M/WBE** Utilization Plan in accordance with Section 6-129 and Part A, Section 11 below.

9. Where an **M/WBE** Utilization Plan has been submitted, and the Contractor requests a change order the value of which exceeds the greater of 10 percent of the Contract or Task Order, as applicable, or $500,000, Agency shall review the scope of work for the Contract or Task Order, as applicable, and the scale and types of work involved in the change order, and determine whether the **Participation Goals** should be modified.

10. Pre-award waiver of the **Participation Goals**. (a) A bidder or proposer, or contractor with respect to a Task Order, may seek a pre-award full or partial waiver of the **Participation Goals** in accordance with Section 6-129, which requests that Agency change one or more **Participation Goals** on the grounds that the **Participation Goals** are unreasonable in light of the availability of certified firms to perform the services required, or by demonstrating that it has legitimate business reasons for proposing a lower level of subcontracting in its M/WBE Utilization Plan.

(b) To apply for a full or partial waiver of the **Participation Goals**, a bidder, proposer, or contractor, as applicable, must complete Part III (Page 5) of Schedule B and submit such request no later than seven (7) calendar days prior to the date and time the bids, proposals, or Task Orders are due, in writing to the Agency by email at poped@ddc.nyc.gov or via facsimile at (718) 391-1886. Bidders, proposers, or contractors, as applicable, who have submitted requests will receive an Agency response by no later than two (2) calendar days prior to the due date for bids, proposals, or Task Orders; provided, however, that if that date would fall on a weekend or holiday, an Agency response will be provided by close-of-business on the business day before such weekend or holiday date.

(c) If the Agency determines that the **Participation Goals** are unreasonable in light of the availability of certified firms to perform the services required, it shall revise the solicitation and extend the deadline for bids and proposals, or revise the Task Order, as applicable.

(d) Agency may grant a full or partial waiver of the **Participation Goals** to a bidder, proposer or contractor, as applicable, who demonstrates—before submission of the bid, proposal or Task Order, as applicable—that it has legitimate business reasons for proposing the level of subcontracting in its **M/WBE** Utilization Plan. In making its determination, Agency shall consider factors that shall include, but not be limited to, whether the bidder, proposer or contractor, as applicable, has the capacity and the bona fide intention to perform the Contract without any subcontracting, or to perform the Contract without awarding the amount of subcontracts represented by the **Participation Goals**. In making such determination, Agency may consider whether the **M/WBE** Utilization Plan is consistent with past subcontracting practices of the bidder, proposer or contractor, as applicable, whether the bidder, proposer or contractor, as applicable, has made efforts to form a joint venture with a certified firm, and whether the bidder, proposer, or contractor, as applicable, has made good faith efforts to identify other portions of the Contract that it intends to subcontract.

11. Modification of **M/WBE** Utilization Plan. (a) A Contractor may request a modification of its **M/WBE** Utilization Plan after award of this Contract. **PLEASE NOTE: If this Contract is a public works project subject to GML §101(5) (i.e., a contract valued at or below $3M for projects in New York City) or if the Contract is subject to a project labor agreement in accordance with Labor Law §222, and the bidder is required to identify at the time of bid submission its intended subcontractors for the Wicks trades (plumbing and gas fitting; steam heating, hot water heating, ventilating and air conditioning (HVAC); and electric wiring), the Contractor may request a Modification of its M/WBE Utilization Plan as part of its bid submission.** The Agency may grant a request for Modification of a Contractor's **M/WBE** Utilization Plan if it determines that the Contractor has established, with appropriate documentary and other evidence, that it made reasonable, good faith efforts to meet the **Participation Goals.** In making such determination, Agency shall consider evidence of the following efforts, as applicable, along with any other relevant factors:

(i) The Contractor advertised opportunities to participate in the Contract, where appropriate, in general circulation media, trade and professional association publications and small business media, and publications of minority and women's business organizations;
(ii) The Contractor provided notice of specific opportunities to participate in the Contract, in a timely manner, to minority and women's business organizations;
(iii) The Contractor sent written notices, by certified mail or facsimile, in a timely manner, to advise MBEs or WBEs that their interest in the Contract was solicited;
(iv) The Contractor made efforts to identify portions of the work that could be substituted for portions originally designated for participation by MBEs and/or WBEs in the M/WBE Utilization Plan, and for which the Contractor claims an inability to retain MBEs or WBEs;
(v) The Contractor held meetings with MBEs and/or WBEs prior to the date their bids or proposals were due, for the purpose of explaining in detail the scope and requirements of the work for which their bids or proposals were solicited;
(vi) The Contractor made efforts to negotiate with MBEs and/or WBEs as relevant to perform specific subcontracts, or act as suppliers or service providers;
(vii) Timely written requests for assistance made by the Contractor to Agency's M/WBE liaison officer and to DSBS;
(viii) Description of how recommendations made by DSBS and Agency were acted upon and an explanation of why action upon such recommendations did not lead to the desired level of participation of MBEs and/or WBEs.

Agency's M/WBE officer shall provide written notice to the Contractor of the determination.

(b) The Agency may modify the **Participation Goals** when the scope of the work has been changed by the Agency in a manner that affects the scale and types of work that the Contractor indicated in its **M/WBE** Utilization Plan would be awarded to subcontractors.

12. If this Contract is for an indefinite quantity of construction, standard or professional services or is a requirements type contract and the Contractor has submitted an **M/WBE** Utilization Plan and has committed to subcontract work to MBEs and/or WBEs in order to meet the **Participation Goals**, the Contractor will not be deemed in violation of the M/WBE Program requirements for this Contract with regard to any work which was intended to be subcontracted to an MBE and/or WBE to the extent that the Agency has determined that such work is not needed.

13. If **Participation Goals** have been established for this Contract or a Task Order issued pursuant to this Contract, at least once annually during the term of the Contract or Task Order, as applicable, Agency shall review the Contractor's progress toward attainment of its M/WBE Utilization Plan, including but not limited to, by reviewing the percentage of work the Contractor has actually awarded to MBE and/or WBE subcontractors and the payments the Contractor made to such subcontractors.

14. If **Participation Goals** have been established for this Contract or a Task Order issued pursuant to this Contract, Agency shall evaluate and assess the Contractor's performance in meeting those goals, and such evaluation and assessment shall become part of the Contractor's overall contract performance evaluation.

PART B: MISCELLANEOUS

1. The Contractor shall take notice that, if this solicitation requires the establishment of an **M/WBE** Utilization Plan, the resulting contract may be audited by DSBS to determine compliance with Section 6-129. See §6-129(e)(10). Furthermore, such resulting contract may also be examined by the City's Comptroller to assess compliance with the **M/WBE** Utilization Plan.

2. Pursuant to DSBS rules, construction contracts that include a requirement for an **M/WBE** Utilization Plan shall not be subject to the law governing Locally Based Enterprises set forth in Section 6-108.1 of the Administrative Code of the City of New York.

3. DSBS is available to assist contractors and potential contractors in determining the availability of MBEs and/or WBEs to participate as subcontractors, and in identifying opportunities that are appropriate for participation by MBEs and/or WBEs in contracts.

4. Prospective contractors are encouraged to enter into qualified joint venture agreements with MBEs and/or WBEs as defined by Section 6-129(c)(30).

5. By submitting a bid or proposal the Contractor hereby acknowledges its understanding of the M/WBE Program requirements set forth herein and the pertinent provisions of Section 6-129, and any rules promulgated thereunder, and if awarded this Contract, the Contractor hereby agrees to comply with the M/WBE Program requirements of this Contract and pertinent provisions of Section 6-129, and any rules promulgated thereunder, all of which shall be deemed to be material terms of this Contract. The Contractor hereby agrees to make all reasonable, good faith efforts to solicit and obtain the participation of MBEs and/or WBEs to meet the required **Participation Goals**.

ARTICLE II. ENFORCEMENT

1. If Agency determines that a bidder or proposer, as applicable, has, in relation to this procurement, violated Section 6-129 or the DSBS rules promulgated pursuant to Section 6-129, Agency may disqualify such bidder or proposer, as applicable, from competing for this Contract and the Agency may revoke such bidder's or proposer's prequalification status, if applicable.

2. Whenever Agency believes that the Contractor or a subcontractor is not in compliance with Section 6-129 or the DSBS rules promulgated pursuant to Section 6-129, or any provision of this Contract that implements Section 6-129, including, but not limited to any **M/WBE** Utilization Plan, Agency shall send a written notice to the Contractor describing the alleged noncompliance and offering the Contractor an opportunity to be heard. Agency shall then conduct an investigation to determine whether such Contractor or subcontractor is in compliance.

3. In the event that the Contractor has been found to have violated Section 6-129, the DSBS rules promulgated pursuant to Section 6-129, or any provision of this Contract that implements Section 6-129, including, but not limited to, any **M/WBE** Utilization Plan, Agency may determine that one of the following actions should be taken:

(a) entering into an agreement with the Contractor allowing the Contractor to cure the violation;
(b) revoking the Contractor's pre-qualification to bid or make proposals for future contracts;
(c) making a finding that the Contractor is in default of the Contract;
(d) terminating the Contract;
(e) declaring the Contractor to be in breach of Contract;
(f) withholding payment or reimbursement;
(g) determining not to renew the Contract;
(h) assessing actual and consequential damages;
(i) assessing liquidated damages or reducing fees, provided that liquidated damages may be based on amounts representing costs of delays in carrying out the purposes of the M/WBE Program, or in meeting the purposes of the Contract, the costs of meeting utilization goals through additional procurements, the administrative costs of investigation and enforcement, or other factors set forth in the Contract;
(j) exercising rights under the Contract to procure goods, services or construction from another contractor and charge the cost of such contract to the Contractor that has been found to be in noncompliance; or
(k) taking any other appropriate remedy.

4. If an **M/WBE** Utilization Plan has been submitted, and pursuant to this Article II, Section 3, the Contractor has been found to have failed to fulfill its **Participation Goals** contained in its **M/WBE** Utilization Plan or the **Participation Goals** as modified by Agency pursuant to Article I, Part A, Section 11, Agency may assess liquidated damages in the amount of ten percent (10%) of the difference between the dollar amount of work required to be awarded to MBE and/or WBE firms to meet the **Participation Goals** and the dollar amount the Contractor actually awarded and paid, and/or credited, to MBE and/or WBE firms. In view of the difficulty of accurately ascertaining the loss which the City will suffer by reason of Contractor's failure to meet the **Participation Goals**, the foregoing amount is hereby fixed and agreed as the liquidated damages that the City will suffer by reason of such failure, and not as a penalty. Agency may deduct and retain out of any monies which may become due under this Contract the amount of any such liquidated damages; and in case the amount which may become due under this Contract shall be less than the amount of liquidated damages suffered by the City, the Contractor shall be liable to pay the difference.

5. Whenever Agency has reason to believe that an MBE and/or WBE is not qualified for certification, or is participating in a contract in a manner that does not serve a commercially useful function (as defined in Section 6-129(c)(8)), or has violated any provision of Section 6- 129, Agency shall notify the Commissioner of DSBS who shall determine whether the certification of such business enterprise should be revoked.

6. Statements made in any instrument submitted to Agency pursuant to Section 6-129 shall be submitted under penalty of perjury and any false or misleading statement or omission shall be grounds for the application of any applicable criminal and/or civil penalties for perjury. The making of a false or fraudulent statement by an MBE and/or WBE in any instrument submitted pursuant to Section 6-129 shall, in addition, be grounds for revocation of its certification.

7. The Contractor's record in implementing its **M/WBE** Utilization Plan shall be a factor in the evaluation of its performance. Whenever Agency determines that a Contractor's compliance with an **M/WBE** Utilization Plan has been unsatisfactory, Agency shall, after consultation with the City Chief Procurement Officer, file an advice of caution form for inclusion in VENDEX as caution data.

IN WITNESS WHEREOF, the Deputy Commissioner, on behalf of the City of New York, and the Contractor, have executed this agreement in quadruplicate, two parts of which are to remain with the Commissioner, another to be filed with the Comptroller of the City, and the fourth to be delivered to the Contractor.

THE CITY OF NEW YORK

By: _____
Deputy Commissioner

CONTRACTOR:

By: _____
(Member of Firm or Officer of Corporation)

Title: President

(Where Contractor is a Corporation, add):
Attest:

_____
Secretary

(Seal)

_____

ACKNOWLEDGEMENT OF PRINCIPAL, IF A CORPORATION

State of New York County of Westchester ss:

On this 7 day of June, 2017, before me personally came Carlo Cozzi to me known who, being by me duly sworn did depose and say that he resides at 45 Washington Ave New Rochelle NY 10805 that he is the Pres of the corporation described in and which executed the foregoing instrument; that he knows the seal of said corporation; that one of the seals affixed to said instrument is such seal; that it was so affixed by order of the directors of said corporation, and that he signed his name thereto by like order.

BRENDA A. BARREIRO
Notary Public, State of New York
No. 01BA6351073
Qualified in Kings County
Commission Expires Nov. 28, 2020

Brenda A Barreiro
Notary Public or Commissioner of Deeds

ACKNOWLEDGEMENT OF PRINCIPAL, IF A PARTNERSHIP

State of _____ County of _____ ss:

On this _____ day of _____, _____, before me personally appeared _____ to me known, and known to me to be one of the members of the firm of _____ _____ described in and who executed the foregoing instrument; and he acknowledged to me that he executed the same as and for the act and deed of said firm.

_____
Notary Public or Commissioner of Deeds

ACKNOWLEDGEMENT OF PRINCIPAL, IF AN INDIVIDUAL

State of _____ County of _____ ss:

On this _____ day of _____, _____, before me personally appeared _____ to me known, and known to me to be the person described in and who executed the foregoing instrument; and acknowledged that he executed the same.

_____
Notary Public or Commissioner of Deeds

ACKNOWLEDGEMENT BY COMMISSIONER

State of New York County of Queens ss:

On this 07 day of June, 2017, before me personally came Eric MacFarlane to me known, and known to be the Deputy Commissioner of the Department of Design and Construction of The City of New York, the person described as such in and who as such executed the foregoing instrument and acknowledged to me that he executed the same as Deputy Commissioner for the purposes therein mentioned.

Brenda A. Barreiro

Notary Public or Commissioner of Deeds

BRENDA A. BARREIRO
Notary Public, State of New York
No. 01BA6351073
Qualified in Kings County
Commission Expires Nov. 28, 2020

AUTHORITY

MAYOR'S CERTIFICATE NO. CBX DATED
BUDGET DIRECTOR'S CERTIFICATE NO. DATED

APPROPRIATION
COMMISSIONER'S CERTIFICATE

In conformity with the provisions of Section 6-101 of the Administrative Code of the City of New York, it is hereby certified that the estimated cost of the work, materials and supplies required by the within Contract, amounting to

Thirty seven million, Four Hundred thirty two thousand, six hundred Fourty seven 57/100

Dollars ($ 37,432,647.57

is chargeable to the fund of the Department of Design and Construction entitled Code

_____

_____

_____
Department of Design and Construction

I hereby certify that the specifications contained herein comply with the terms and conditions of the BUDGET.

Deputy Commissioner

COMPTROLLER'S CERTIFICATE

The City of New York_____

Pursuant to the provisions of Section 6-101 of the Administrative Code of the City of New York, I hereby certify that there remains unapplied and unexpended a balance of the above mentioned fund applicable to this Contract sufficient to pay the estimated expense of executing the same viz:

$_____

_____
Comptroller

MAYOR'S CERTIFICATE OR CERTIFICATE OF THE DIRECTOR OF THE BUDGET

<u>Performance Bond #1 (Pages 92 to 95)</u>: Use if the total contract price is $5 Million Or Less. Performance Bond #1 has been approved by the U.S. Small Business Administration ("SBA") for participation in its Bond Guarantee Program.

PERFORMANCE BOND #1

KNOW ALL PERSONS BY THESE PRESENTS:,
That we, _____

_____

_____

hereinafter referred to as the "Principal,".
and, _____

_____

_____

hereinafter referred to as the "Surety" ("Sureties") are held and firmly bound to THE CITY OF NEW YORK, hereinafter referred to as the "City" or to its successors and assigns in the penal sum
of _____

_____

_____

($_____) Dollars, lawful money of the United States for the payment of which said sum of money well and truly to be made, we, and each of us, bind ourselves, our heirs, executors, administrators, successors and assigns, jointly and severally, firmly by these presents.

WHEREAS, the Principal is about to enter, or has entered, into a Contract in writing with the City for

_____

_____

a copy of which Contract is annexed to and hereby made a part of this bond as though herein set forth in full;

NOW, THEREFORE, the conditions of this obligation are such that if the Principal, his or its representatives or assigns, shall well and faithfully perform the said Contract and all modifications, amendments, additions and alterations thereto that may hereafter be made, according to its terms and its true intent and meaning, including repair and or replacement of defective work and guarantees of maintenance for the periods stated in the Contract, and shall fully indemnify and save harmless the City from all cost and damage which it may suffer by reason of the Principal's default of the Contract, and shall fully reimburse and repay the City for all outlay and expense which the City may incur in making

<u>Performance Bond #1 (Pages 92 to 95)</u>: Use if the total contract price is $5 Million Or Less. Performance Bond #1 has been approved by the U.S. Small Business Administration ("SBA") for participation in its Bond Guarantee Program.

good any such default and shall protect the said City of New York against, and pay any and all amounts, damages, cost and judgments which may or shall be recovered against said City or its officers or agents or which the said City of New York may be called upon to pay any person or corporation by reason of any damages arising or growing out of the Principal's default of the Contract, then this obligation shall be null and void, otherwise to remain in full force and effect.

The Surety (Sureties), for value received, hereby stipulates and agrees, upon written notice from the City that the City has determined that the Principal is in default of the Contract, to (1) pay the City the cost to complete the contract as determined by the City in excess of the balance of the Contract held by the City, plus any damages or costs to which the City is entitled, up to the full amount of the above penal sum, (2) fully perform and complete the Work to be performed under the Contract, pursuant to the terms, conditions, and covenants thereof, or (3) tender a completion Contractor that is acceptable to the City. The Surety (Sureties) further agrees, at its option, either to notify the City that it elects to pay the city the cost of completion plus any applicable damages and costs under option (1) above, or to commence and diligently perform the Work specified in the Contract, including physical site work, within twenty-five (25) business days after written notice thereof from the City and, if the Surety elects to fully perform and complete the Work, then to complete all Work within the time set forth in the Contract or such other time as agreed to between the City and Surety in accordance with the Contract. If the Surety elects to tender payment pursuant to (1) above, then the Surety shall tender such amount within fifteen (15) business days notification from the City of the cost of completion. The Surety and the City reserve all rights and defenses each may have against the other; provided, however, that the Surety expressly agrees that its reservation of rights shall not provide a basis for non-performance of its obligation to pay the City the cost of completion, to commence and complete all Work as provided herein, or to tender a completion contractor.

The Surety (Sureties), for value received, for itself and its successors and assigns, hereby stipulates and agrees that the obligation of said Surety (Sureties) and its bond shall be in no way impaired or affected by any extension of time, modification, omission, addition, or change in or to the said Contract or the Work to be performed thereunder, or by any payment thereunder before the time required therein, or by any waiver of any provisions thereof, or any moneys due or to become due thereunder; and said Surety (Sureties) does hereby waive notice of any and all of such extensions, modifications, omissions, additions, changes, payments, and waivers, and hereby expressly stipulates and agrees that any and all things done and omitted to be done by and in relation to subcontractors shall have the same effect as to said Surety (Sureties) as though done or omitted to be done by or in relation to said Principal. Notwithstanding the above, if the City makes payments to the Principal before the time required by the contract that in the aggregate exceed $100,000 or 10% of the Contract price, whichever is less, and that have not become earned prior to the Principal being found to be in default, then all payments made to the Principal before the time required by the Contract shall be added to the remaining contract value available to be paid for the completion of the Contract as if such sums had not been paid to the Principal, but shall not provide a basis for non-performance of its obligation to pay the City the cost of completion, to commence and to complete all Work as provided herein, or to tender a completion contractor.

<u>Performance Bond #1 (Pages 92 to 95)</u>: Use if the total contract price is $5 Million Or Less. Performance Bond #1 has been approved by the U.S. Small Business Administration ("SBA") for participation in its Bond Guarantee Program.

PERFORMANCE BOND #1 (Page 3)

IN WITNESS WHEREOF, The Principal and the Surety (Sureties) have hereunto set their hands and seals, and such of them as are corporations have caused their corporate seals to be hereunto affixed and these presents to be signed by their proper officers, this

_____ day of _____, 20_____.

(Seal)

_____(L.S.)
Principal

By:_____.

(Seal)

Surety

By:_____.
_____.

(Seal)

Surety

By:_____.
_____.

(Seal)

Surety

By:_____.
_____.

(Seal)

Surety

By:_____.
_____.

(Seal)

Surety

By:_____.

Bond Premium Rate _____.

Bond Premium Cost _____.

If the Contractor (Principal) is a partnership, the bond should be signed by each of the individuals who are partners.

If the Contractor (Principal) is a corporation, the bond should be signed in its correct corporate name by a duly authorized officer, agent, or attorney-in-fact.

There should be executed an appropriate number of counterparts of the bond corresponding to the number of counterparts of the Contract.

Performance Bond #1 (Pages 92 to 95): Use if the total contract price is $5 Million Or Less. Performance Bond #1 has been approved by the U.S. Small Business Administration ("SBA") for participation in its Bond Guarantee Program.

ACKNOWLEDGMENT OF PRINCIPAL IF A CORPORATION

State of _____ County of _____ ss:

On this _____ day of _____, 20_____ before me personally came _____,
to me known, who, being by me duly sworn did depose and say that he/she resides at _____
_____; that he/she is the _____
of the corporation described in and which executed the foregoing instrument; and that he/she signed his/her name to the foregoing instrument by order of the directors of said corporation as the duly authorized and binding act thereof.

_____
Notary Public or Commissioner of Deeds.

ACKNOWLEDGMENT OF PRINCIPAL IF A PARTNERSHIP

State of _____ County of _____ ss:

On this _____ day of _____, 20 _____ before me personally came _____,
to me known, who, being by me duly sworn did dispose and say that he/she resides at _____
_____; that he/she is _____ partner of
_____, a limited/general partnership existing under the laws of the State of
_____, the partnership described in and which executed the foregoing instrument;
and that he/she signed his/her name to the foregoing instrument as the duly authorized and binding act of said partnership.

_____
Notary Public or Commissioner of Deeds.

ACKNOWLEDGMENT OF PRINCIPAL IF AN INDIVIDUAL

State of _____ County of _____ ss:

On this _____ day of _____, 20_____ before me personally came _____,
to me known, who,.being by me duly sworn did depose and say that he/she resides at _____
_____, and that he/she is the individual whose name is subscribed to the within instrument and acknowledged to me that by his/her signature on the instrument, said individual executed the instrument.

_____
Notary Public or Commissioner of Deeds

Each executed bond should be accompanied by: (a) appropriate acknowledgments of the respective parties; (b) appropriate duly certified copy of Power of Attorney or other certificate of authority where bond is executed by agent, officer or other representative of Principal or Surety; (c) a duly certified extract from By-Laws or resolutions of Surety under which Power of Attorney or other certificate of authority of its agent, officer or representative was issued, and (d) certified copy of latest published financial statement of assets and liabilities of Surety.

* * * * * * * *

Affix Acknowledgments and Justification of Sureties.

<u>Performance Bond #2 (Pages 96 to 99)</u>: Use if the total contract price is more than $5 Million.

PERFORMANCE BOND #2

KNOW ALL PERSONS BY THESE PRESENTS:,
That we, _____

_____

_____

hereinafter referred to as the "Principal,"
and, _____

_____

_____

hereinafter referred to as the "Surety" ("Sureties") are held and firmly bound to THE CITY OF NEW YORK, hereinafter referred to as the "City" or to its successors and assigns in the penal sum
of _____

_____

_____

($_____) Dollars, lawful money of the United States for the payment of which said sum of money well and truly to be made, we, and each of us, bind ourselves, our heirs, executors, administrators, successors and assigns, jointly and severally, firmly by these presents.

WHEREAS, the Principal is about to enter, or has entered, into a Contract in writing with the City for

_____

_____

a copy of which Contract is annexed to and hereby made a part of this bond as though herein set forth in full;

NOW, THEREFORE, the conditions of this obligation are such that if the Principal, his or its representatives or assigns, shall well and faithfully perform the said Contract and all modifications, amendments, additions and alterations thereto that may hereafter be made, according to its terms and its true intent and meaning, including repair and or replacement of defective work and guarantees of maintenance for the periods stated in the Contract, and shall fully indemnify and save harmless the City from all cost and damage which it may suffer by reason of the Principal's default of the Contract, and shall fully reimburse and repay the City for all outlay and expense which the City may incur in making

Performance Bond #2 (Pages 96 to 99): Use if the total contract price is more than $5 Million.

Bond No. 015-053-009

PERFORMANCE BOND #2

KNOW ALL PERSONS BY THESE PRESENTS:,
That we, Triumph Construction Corp.

1354 Seneca Avenue

Bronx, NY 10474

hereinafter referred to as the "Principal,"
and, Liberty Mutual Insurance Company

1200 MacArthur Boulevard, 3rd Floor

Mahwah, NJ 07430

hereinafter referred to as the "Surety" ("Sureties") are held and firmly bound to THE CITY OF NEW YORK, hereinafter referred to as the "City" or to its successors and assigns in the penal sum of Thirty Seven Million Four Hundred Thirty Two Thousand Six Hundred Forty Seven and 57/100 Dollars

($ 37,432,647.57) **Dollars, lawful money of the United States for the payment of which said sum of money well and truly to be made, we, and each of us, bind ourselves, our heirs, executors, administrators, successors and assigns, jointly and severally, firmly by these presents.**

WHEREAS, the Principal is about to enter, or has entered, into a Contract in writing with the City for

FMS Project ID : BED798 - Replacement of Trunk and Distribution Water Mains, Sewers and Appurtenances in Flatbush Avenue Between Sterling Place and 8th Avenue, Etc. Including Sewer, Water Main, 8th Avenue Triangle Streetscape, Neckdowns, Street Lighting, and Traffic Signal Work Together With All Work Incidental Thereto Borough of Brooklyn, City of New York - DDC PIN: 8502017WM0008C

a copy of which Contract is annexed to and hereby made a part of this bond as though herein set forth in full;

NOW, THEREFORE, the conditions of this obligation are such that if the Principal, his or its representatives or assigns, shall well and faithfully perform the said Contract and all modifications, amendments, additions and alterations thereto that may hereafter be made, according to its terms and its true intent and meaning, including repair and or replacement of defective work and guarantees of maintenance for the periods stated in the Contract, and shall fully indemnify and save harmless the City from all cost and damage which it may suffer by reason of the Principal's default of the Contract, and shall fully reimburse and repay the City for all outlay and expense which the City may incur in making

<u>Performance Bond #2 (Pages 96 to 99)</u>: Use if the total contract price is more than $5 Million.

good any such default and shall protect the said City of New York against, and pay any and all amounts, damages, cost and judgments which may or shall be recovered against said City or its officers or agents or which the said City of New York may be called upon to pay any person or corporation by reason of any damages arising or growing out of the Principal's default of the Contract, then this obligation shall be null and void, otherwise to remain in full force and effect.

The Surety (Sureties), for value received, hereby stipulates and agrees, upon written notice from the City that the City has determined that the Principal is in default of the Contract, to either (1) pay the full amount of the above penal sum in complete discharge and exoneration of this bond and of all the liabilities of the Surety relating to this bond, or (2) fully perform and complete the Work to be performed under the Contract, pursuant to the terms, conditions, and covenants thereof. The Surety (Sureties) further agrees, at its option, either to tender the penal sum or to commence and diligently perform the Work specified in the Contract, including physical site work, within twenty-five (25) business days after written notice thereof from the City and to complete all Work within the time set forth in the Contract or such other time as agreed to between the City and Surety in accordance with the Contract. The Surety and the City reserve all rights and defenses each may have against the other; provided, however, that the Surety expressly agrees that its reservation of rights shall not provide a basis for non-performance of its obligation to commence and to complete all Work as provided herein.

The Surety (Sureties), for value received, for itself and its successors and assigns, hereby stipulates and agrees that the obligation of said Surety (Sureties) and its bond shall be in no way impaired or affected by any extension of time, modification, omission, addition, or change in or to the said Contract or the Work to be performed thereunder, or by any payment thereunder before the time required therein, or by any waiver of any provisions thereof, or by any assignment, subletting or other transfer thereof or of any Work to be performed or any moneys due or to become due thereunder; and said Surety (Sureties) does hereby waive notice of any and all of such extensions, modifications, omissions, additions, changes, payments, waivers, assignments, subcontracts and transfers, and hereby expressly stipulates and agrees that any and all things done and omitted to be done by and in relation to assignees, subcontractors, and other transferees shall have the same effect as to said Surety (Sureties) as though done or omitted to be done by or in relation to said Principal.

Performance Bond #2 (Pages 96 to 99): Use if the total contract price is more than $5 Million.

PERFORMANCE BOND #2 (Page 3)

IN WITNESS WHEREOF, The Principal and the Surety (Sureties) have hereunto set their hands and seals, and such of them as are corporations have caused their corporate seals to be hereunto affixed and these presents to be signed by their proper officers, this

1st day of June 20 17.

(Seal)

Triumph Construction Corp. (L.S.)
Principal

By: _____.

(Seal)

Surety
Liberty Mutual Insurance Company

By: _____.
Sandra A. Pace Attorney-in-Fact.
Surety

(Seal)

By: N/A.
_____.
Surety

(Seal)

By: N/A.
_____.
Surety

(Seal)

By: N/A.
_____.
Surety

(Seal)

By: N/A.

Bond Premium Rate $17.00/$10.00/$7.50/$7.00/$6.50.

Bond Premium Cost $333,579.

If the Contractor (Principal) is a partnership, the bond should be signed by each of the individuals who are partners.

If the Contractor (Principal) is a corporation, the bond should be signed in its correct corporate name by a duly authorized officer, agent, or attorney-in-fact.

There should be executed an appropriate number of counterparts of the bond corresponding to the number of counterparts of the Contract.

Performance Bond #2 (Pages 96 to 99): Use if the total contract price is more than $5 Million.

ACKNOWLEDGMENT OF PRINCIPAL IF A CORPORATION

State of New York County of Bronx ss:

On this 1st day of June, 20 17 before me personally came Carlo Cuzzi,
to me known, who, being by me duly sworn did depose and say that he resides
at 45 Winchester Ave New Rochelle NY 10805; that he/she is the President
of the corporation described in and which executed the foregoing instrument; that he/she signed his/her name to the foregoing instrument by order of the directors of said corporation as the duly authorized and binding act thereof.

SHIRLEY JACOBS
NOTARY PUBLIC-STATE OF NEW YORK

Notary Public or Commissioner of Deeds. No. 01JA6078625
Qualified in Westchester County 8/5/18
My Commission Expires

ACKNOWLEDGMENT OF PRINCIPAL IF A PARTNERSHIP

State of _____ County of _____ ss:

On this _____ day of _____, 20 _____ before me personally came _____,
to me known, who, being by me duly sworn did depose and say that he/she resides
at_____

_____; that he/she is _____ partner of _____, a limited/general partnership existing under the laws of the State of _____, the partnership described in and which executed the foregoing instrument; and that he/she signed his/her name to the foregoing instrument as the duly authorized and binding act of said partnership.

_____
Notary Public or Commissioner of Deeds

ACKNOWLEDGMENT OF PRINCIPAL IF AN INDIVIDUAL

State of _____ County of _____ ss:

On this _____ day of _____, 20_____ before me personally came _____,
to me known, who, being by me duly sworn did depose and say that he/she resides
at_____

_____, and that he/she is the individual whose name is subscribed to the within instrument and acknowledged to me that by his/her signature on the instrument, said individual executed the instrument.

_____
Notary Public or Commissioner of Deeds

Each executed bond should be accompanied by: (a) appropriate acknowledgments of the respective parties; (b) appropriate duly certified copy of Power of Attorney or other certificate of authority where bond is executed by agent, officer or other representative of Principal or Surety; (c) a duly certified extract from By-Laws or resolutions of Surety under which Power of Attorney or other certificate of authority of its agent, officer or representative was issued, and (d) certified copy of latest published financial statement of assets and liabilities of Surety.

* * * * * * * *

Affix Acknowledgments and Justification of Sureties.

SURETY ACKNOWLEDGMENT

State of **New Jersey**

County of **Union**

On this **1st** day of **June, 2017**

Before me personally came **Sandra A. Pace** to me known, who being by me duly sworn, did depose and say that he/she is an Attorney-in-Fact of **Liberty Mutual Insurance Company** the corporation described in and which executed the within instrument; that he/she knows the corporate seal of said corporation; that the seal affixed to the within instrument is such corporate seal, and that he/she signed the said instrument and affixed the said seal as Attorney-in-Fact by authority of the Board of Directors of said corporation and by authority of this office under the Standing Resolutions thereof.

JAMI A. KING
NOTARY PUBLIC OF NEW JERSEY
Comm. # 50045935
My Commission Expires 9/16/2021

My commission expires _____

THIS POWER OF ATTORNEY IS NOT VALID UNLESS IT IS PRINTED ON RED BACKGROUND.
This Power of Attorney limits the acts of those named herein, and they have no authority to bind the Company except in the manner and to the extent herein stated.

Certificate No. 7573560

Liberty Mutual Insurance Company
The Ohio Casualty Insurance Company West American Insurance Company

POWER OF ATTORNEY

KNOWN ALL PERSONS BY THESE PRESENTS: That The Ohio Casualty Insurance Company is a corporation duly organized under the laws of the State of New Hampshire, that Liberty Mutual Insurance Company is a corporation duly organized under the laws of the State of Massachusetts, and West American Insurance Company is a corporation duly organized under the laws of the State of Indiana (herein collectively called the "Companies"), pursuant to and by authority herein set forth, does hereby name, constitute and appoint, Cheryl R. Coleman; Lisa A. Anderson; Marc J. Michalewsky; Mary J. D'Amato; Rachael Hurley; Sandra A. Pace; Thomas M. True

all of the city of Westfield, state of NJ each individually if there be more than one named, its true and lawful attorney-in-fact to make, execute, seal, acknowledge and deliver, for and on its behalf as surety and as its act and deed, any and all undertakings, bonds, recognizances and other surety obligations, in pursuance of these presents and shall be as binding upon the Companies as if they have been duly signed by the president and attested by the secretary of the Companies in their own proper persons.

IN WITNESS WHEREOF, this Power of Attorney has been subscribed by an authorized officer or official of the Companies and the corporate seals of the Companies have been affixed thereto this 16th day of December, 2016.

THE OHIO CASUALTY INSURANCE COMPANY INCORPORATED 1919 NEW HAMPSHIRE
LIBERTY MUTUAL INSURANCE COMPANY INCORPORATED 1912 MASSACHUSETTS
WEST AMERICAN INSURANCE COMPANY INCORPORATED 1991 INDIANA

The Ohio Casualty Insurance Company
Liberty Mutual Insurance Company
West American Insurance Company

By: David M. Carey
David M. Carey, Assistant Secretary

STATE OF PENNSYLVANIA ss
COUNTY OF MONTGOMERY

On this 16th day of December, 2016, before me personally appeared David M. Carey, who acknowledged himself to be the Assistant Secretary of Liberty Mutual Insurance Company, The Ohio Casualty Company, and West American Insurance Company, and that he, as such, being authorized so to do, execute the foregoing instrument for the purposes therein contained by signing on behalf of the corporations by himself as a duly authorized officer.

IN WITNESS WHEREOF, I have hereunto subscribed my name and affixed my notarial seal at King of Prussia, Pennsylvania, on the day and year first above written.

TERESA PASTELLA COMMONWEALTH OF PENNSYLVANIA NOTARY PUBLIC

COMMONWEALTH OF PENNSYLVANIA
Notarial Seal
Teresa Pastella, Notary Public
Upper Merion Twp., Montgomery County
My Commission Expires March 28, 2017
Member, Pennsylvania Association of Notaries

By: Teresa Pastella
Teresa Pastella, Notary Public

This Power of Attorney is made and executed pursuant to and by authority of the following By-laws and Authorizations of The Ohio Casualty Insurance Company, Liberty Mutual Insurance Company, and West American Insurance Company which resolutions are now in full force and effect reading as follows:

ARTICLE IV – OFFICERS – Section 12. Power of Attorney. Any officer or other official of the Corporation authorized for that purpose in writing by the Chairman or the President, and subject to such limitation as the Chairman or the President may prescribe, shall appoint such attorneys-in-fact, as may be necessary to act in behalf of the Corporation to make, execute, seal, acknowledge and deliver as surety any and all undertakings, bonds, recognizances and other surety obligations. Such attorneys-in-fact, subject to the limitations set forth in their respective powers of attorney, shall have full power to bind the Corporation by their signature and execution of any such instruments and to attach thereto the seal of the Corporation. When so executed, such instruments shall be as binding as if signed by the President and attested to by the Secretary. Any power or authority granted to any representative or attorney-in-fact under the provisions of this article may be revoked at any time by the Board, the Chairman, the President or by the officer or officers granting such power or authority.

ARTICLE XIII – Execution of Contracts – SECTION 5. Surety Bonds and Undertakings. Any officer of the Company authorized for that purpose in writing by the chairman or the president, and subject to such limitations as the chairman or the president may prescribe, shall appoint such attorneys-in-fact, as may be necessary to act in behalf of the Company to make, execute, seal, acknowledge and deliver as surety any and all undertakings, bonds, recognizances and other surety obligations. Such attorneys-in-fact subject to the limitations set forth in their respective powers of attorney, shall have full power to bind the Company by their signature and execution of any such instruments and to attach thereto the seal of the Company. When so executed such instruments shall be as binding as if signed by the president and attested by the secretary.

Certificate of Designation – The President of the Company, acting pursuant to the Bylaws of the Company, authorizes David M. Carey, Assistant Secretary to appoint such attorneys-in-fact as may be necessary to act on behalf of the Company to make, execute, seal, acknowledge and deliver as surety any and all undertakings, bonds, recognizances and other surety obligations.

Authorization – By unanimous consent of the Company's Board of Directors, the Company consents that facsimile or mechanically reproduced signature of any assistant secretary of the Company, wherever appearing upon a certified copy of any power of attorney issued by the Company in connection with surety bonds, shall be valid and binding upon the Company with the same force and effect as though manually affixed.

I, Renee C. Llewellyn, the undersigned, Assistant Secretary, The Ohio Casualty Insurance Company, Liberty Mutual Insurance Company, and West American Insurance Company do hereby certify that the original power of attorney of which the foregoing is a full, true and correct copy of the Power of Attorney executed by said Companies, is in full force and effect and has not been revoked.

IN TESTIMONY WHEREOF, I have hereunto set my hand and affixed the seals of said Companies this 1st day of June, 20 17.

THE OHIO CASUALTY INSURANCE COMPANY INCORPORATED 1919 NEW HAMPSHIRE
LIBERTY MUTUAL INSURANCE COMPANY INCORPORATED 1912 MASSACHUSETTS
WEST AMERICAN INSURANCE COMPANY INCORPORATED 1991 INDIANA

By: Renee Llewellyn
Renee C. Llewellyn, Assistant Secretary

Not valid for mortgage, note, loan, letter of credit, currency rate, interest rate or individual value guarantees.

To confirm the validity of this Power of Attorney call 1-610-832-8240 between 9:00 am and 4:30 pm EST on any business day.

LMS_12873_082016

LIBERTY MUTUAL INSURANCE COMPANY

FINANCIAL STATEMENT — DECEMBER 31, 2016

Assets

Cash and Bank Deposits	$1,092,914,837
*Bonds — U.S Government	1,406,763,970
*Other Bonds	11,379,916,523
*Stocks	10,349,761,988
Real Estate	290,265,760
Agents' Balances or Uncollected Premiums	4,709,977,463
Accrued Interest and Rents	112,757,395
Other Admitted Assets	14,659,523,751
Total Admitted Assets	**$44,001,881,687**

Liabilities

Unearned Premiums		$6,929,723,299
Reserve for Claims and Claims Expense		17,233,877,300
Funds Held Under Reinsurance Treaties		208,362,823
Reserve for Dividends to Policyholders		944,909
Additional Statutory Reserve		39,649,905
Reserve for Commissions, Taxes and Other Liabilities		3,061,117,958
Total		**$27,473,676,194**
Special Surplus Funds	$95,257,334	
Capital Stock	10,000,000	
Paid in Surplus	9,229,250,104	
Unassigned Surplus	7,193,698,055	
Surplus to Policyholders		**16,528,205,493**
Total Liabilities and Surplus		**$44,001,881,687**

LIBERTY MUTUAL INSURANCE COMPANY INCORPORATED 1912 MASSACHUSETTS

* Bonds are stated at amortized or investment value; Stocks at Association Market Values.
The foregoing financial information is taken from Liberty Mutual Insurance Company's financial statement filed with the state of Massachusetts Department of Insurance.

I, TIM MIKOLAJEWSKI, Assistant Secretary of Liberty Mutual Insurance Company, do hereby certify that the foregoing is a true, and correct statement of the Assets and Liabilities of said Corporation, as of December 31, 2016, to the best of my knowledge and belief.

IN WITNESS WHEREOF, I have hereunto set my hand and affixed the seal of said Corporation at Seattle, Washington, this 23rd day of March, 2017.

T A Mikolajewski

Assistant Secretary

Payment Bond (Pages 100 to 103): Use for any contract for which a Payment Bond is required.

Bond No. 015-053-009 PAYMENT BOND (Page 1)

PAYMENT BOND

KNOW ALL PERSONS BY THESE PRESENTS, That we, Triumph Construction Corp.

1354 Seneca Avenue

Bronx, NY 10474

hereinafter referred to as the "Principal", and Liberty Mutual Insurance Company

1200 MacArthur Boulevard, 3rd Floor

Mahwah, NJ 07430

hereinafter referred to as the "Surety" ("Sureties") are held and firmly bound to THE CITY OF NEW YORK, hereinafter referred to as the "City" or to its successors and assigns, in the penal sum of

Thirty Seven Million Four Hundred Thirty Two Thousand Six Hundred Forty Seven and 57/100 Dollars

($37,432,647.57) Dollars, lawful money of the United States, for the payment of which said sum of money well and truly to be made, we, and each of us, bind ourselves, our heirs, executors, administrators, successors and assigns, jointly and severally, firmly by these presents.

WHEREAS, the Principal is about to enter, or has entered, into a Contract in writing with the City for

FMS Project ID : BED798 - Replacement of Trunk and Distribution Water Mains, Sewers and Appurtenances in Flatbush Avenue

Between Sterling Place and 8th Avenue, Etc. Including Sewer, Water Main, 8th Avenue Triangle Streetscape, Neckdowns, Street Lighting, and Traffic Signal Work Together With All Work Incidental Thereto Borough of Brooklyn, City of New York - DDC PIN: 8502017WM0008C

a copy of which Contract is annexed to and hereby made a part of this bond as though herein set forth in full;

NOW, THEREFORE, the conditions of this obligation are such that if the Principal, his or its representatives or assigns and other Subcontractors to whom Work under this Contract is sublet and his or their successors and assigns shall promptly pay or cause to be paid all lawful claims for

(a) Wages and compensation for labor performed and services rendered by all persons engaged in the prosecution of the Work under said Contract, and any amendment or extension thereof or addition thereto, whether such persons be agents servants or employees of the Principal or any such Subcontractor, including all persons so engaged who perform the work of laborers or mechanics at or in the vicinity of the site

of the Project regardless of any contractual relationship between the Principal or such Subcontractors, or his or their successors or assigns, on the one hand and such laborers or mechanics on the other, but not including office employees not regularly stationed at the site of the project; and

(b) Materials and supplies (whether incorporated in the permanent structure or not), as well as teams, fuels, oils, implements or machinery furnished, used or consumed by said Principal or any subcontractor at or in the vicinity of the site of the Project in the prosecution of the Work under said Contract and any amendment or extension thereof or addition thereto; then this obligation shall be void, otherwise to remain in full force and effect.

This bond is subject to the following additional conditions, limitations and agreements:

(a) The Principal and Surety (Sureties) agree that this bond shall be for the benefit of any materialmen or laborer having a just claim, as well as the City itself.

(b) All persons who have performed labor, rendered services or furnished materials and supplies, as aforesaid, shall have a direct right of action against the Principal and his, its or their successors and assigns, and the Surety (Sureties) herein, or against either or both or any of them and their successors and assigns. Such persons may sue in their own name, and may prosecute the suit to judgment and execution without the necessity of joining with any other persons as party plaintiff.

(c) The Principal and Surety (Sureties) agree that neither of them will hold the City liable for any judgment for costs of otherwise, obtained by either or both of them against a laborer or materialman in a suit brought by either a laborer or materialman under this bond for moneys allegedly due for performing work or furnishing material.

(d) The Surety (Sureties) or its successors and assigns shall not be liable for any compensation recoverable by an employee or laborer under the Workmen's Compensation Law.

(e) In no event shall the Surety (Sureties), or its successors or assigns, be liable for a greater sum than the penalty of this bond or be subject to any suit, action or proceeding hereon that is instituted by any person, firm, or corporation hereunder later than two years after the complete performance of said Contract and final settlement thereof.

The Principal, for himself and his successors and assigns, and the Surety (Sureties), for itself and its successors and assigns, do hereby expressly waive any objection that might be interposed as to the right of the City to require a bond containing the foregoing provisions, and they do hereby further expressly waive any defense which they or either of them might interpose to an action brought hereon by any person, firm or corporation, including subcontractors, materialmen and third persons, for work, labor, services, supplies or material performed rendered, or furnished as aforesaid upon the ground that there is no law authorizing the City to require the foregoing provisions to be place in this bond.

And the Surety (Sureties), for value received, for itself and its successors and assigns, hereby stipulates and agrees that the obligation of said Surety (Sureties), and its bonds shall be in no way impaired or affected by any extension of time, modification, omission, addition, or change in or of the said Contract or the work to be performed thereunder, or by any payment thereunder before the time required therein, or by any waiver of any provisions thereof, or by any assignment, subletting or other transfer thereof or of any part thereof, or of any Work to be performed, or any moneys due to become due thereunder and said Surety (Sureties) does hereby waive notice of any and all of such extensions, modifications, omissions, additions, changes, payments, waivers, assignments, subcontracts and transfers, and hereby expressly stipulates and agrees that any and all things done and omitted to be done by and in relation to assignees, Subcontractors, and other transferees shall have the same effect as to said Surety (Sureties) as though done or omitted to be done or in relation to said Principal.

Payment Bond (Pages 100 to 103): Use for any contract for which a Payment Bond is required.

PAYMENT BOND (Page 3)

IN WITNESS WHEREOF, the Principal and the Surety (Sureties) have hereunto set their hands and seals, and such of them as are corporations have caused their corporate seals to be hereunto affixed and these presents to be signed by their proper officers, this 1st day of June, 2017.

(Seal) Triumph Construction Corp. (L.S.)
Principal

By: _____

(Seal) Liberty Mutual Insurance Company
Surety

By: _____
Sandra A. Pace, Attorney-in-Fact

(Seal) N/A
Surety

By: _____

(Seal) N/A
Surety

By: _____

(Seal) N/A
Surety

By: _____

If the Contractor (Principal) is a partnership, the bond should be signed by each of the individuals who are partners.

If the Contractor (Principal) is a corporation, the bond should be signed in its correct corporate name by a duly authorized officer, agent, or attorney-in-fact.

There should be executed an appropriate number of counterparts of the bond corresponding to the number of counterparts of the Contract.

Payment Bond (Pages 100 to 103): Use for any contract for which a Payment Bond is required.

ACKNOWLEDGMENT OF PRINCIPAL, IF A CORPORATION

State of New York County of Bronx ss:

On this 1st day of June, 2017, before me personally came Carlo Cuzzi to me known, who, being by me duly sworn did depose and say that he resides at 45 Winchester Oval New Rochelle NY 10805 that he is the President of the corporation described in and which executed the foregoing instrument; that he knows the seal of said corporation; that one of the seals affixed to said instrument is such seal; that it was so affixed by order of the directors of said corporation, and that he signed his name thereto by like order.

SHIRLEY JACOBS
NOTARY PUBLIC-STATE OF NEW YORK
No. 01JA6078625
Qualified in Westchester County
My Commission Expires 08-05-18

Notary Public or Commissioner of Deeds

ACKNOWLEDGMENT OF PRINCIPAL, IF A PARTNERSHIP

State of _____ County of _____ ss:

On this _____ day of _____, _____, before me personally appeared _____ to me known, and known to me to be one of the members of the firm of _____ _____ described in and who executed the foregoing instrument; and he acknowledged to me that he executed the same as and for the act and deed of said firm.

Notary Public or Commissioner of Deeds

ACKNOWLEDGMENT OF PRINCIPAL, IF AN INDIVIDUAL

State of _____ County of _____ ss:

On this _____ day of _____, _____, before me personally appeared _____ to me known, and known to me to be the person described in and who executed the foregoing instrument; and acknowledged that he executed the same.

Notary Public or Commissioner of Deeds

Each executed bond should be accompanied by: (a) appropriate acknowledgments of the respective parties; (b) appropriate duly certified copy of Power of Attorney or other certificate of authority where bond is executed by agent, officer or other representative of Principal or Surety; (c) a duly certified extract from By-Laws or resolutions of Surety under which Power of Attorney or other certificate of authority of its agent, officer or representative was issued, and (d) certified copy of latest published financial statement of assets and liabilities of Surety.

* * * * * * * *

Affix Acknowledgments and Justification of Sureties.

SURETY ACKNOWLEDGMENT

State of **New Jersey**

County of **Union**

On this **1st** day of **June, 2017**

Before me personally came **Sandra A. Pace** to me known, who being by me duly sworn, did depose and say that he/she is an Attorney-in-Fact of

Liberty Mutual Insurance Company the corporation described in and which executed the within instrument; that he/she knows the corporate seal of said corporation; that the seal affixed to the within instrument is such corporate seal, and that he/she signed the said instrument and affixed the said seal as Attorney-in-Fact by authority of the Board of Directors of said corporation and by authority of this office under the Standing Resolutions thereof.

JAMI A. KING
NOTARY PUBLIC OF NEW JERSEY
Comm. # 50045935
My Commission Expires 9/16/2021

My commission expires _____

THIS POWER OF ATTORNEY IS NOT VALID UNLESS IT IS PRINTED ON RED BACKGROUND.
This Power of Attorney limits the acts of those named herein, and they have no authority to bind the Company except in the manner and to the extent herein stated.

Certificate No. 7573561

Liberty Mutual Insurance Company
The Ohio Casualty Insurance Company West American Insurance Company

POWER OF ATTORNEY

KNOWN ALL PERSONS BY THESE PRESENTS: That The Ohio Casualty Insurance Company is a corporation duly organized under the laws of the State of New Hampshire, that Liberty Mutual Insurance Company is a corporation duly organized under the laws of the State of Massachusetts, and West American Insurance Company is a corporation duly organized under the laws of the State of Indiana (herein collectively called the "Companies"), pursuant to and by authority herein set forth, does hereby name, constitute and appoint, Cheryl R. Coleman; Lisa A. Anderson; Marc J. Michalewsky; Mary J. D'Amato; Rachael Hurley; Sandra A. Pace; Thomas M. True

all of the city of Westfield, state of NJ each individually if there be more than one named, its true and lawful attorney-in-fact to make, execute, seal, acknowledge and deliver, for and on its behalf as surety and as its act and deed, any and all undertakings, bonds, recognizances and other surety obligations, in pursuance of these presents and shall be as binding upon the Companies as if they have been duly signed by the president and attested by the secretary of the Companies in their own proper persons.

IN WITNESS WHEREOF, this Power of Attorney has been subscribed by an authorized officer or official of the Companies and the corporate seals of the Companies have been affixed thereto this 16th day of December, 2016.

THE OHIO CASUALTY INSURANCE COMPANY INCORPORATED 1919 NEW HAMPSHIRE
LIBERTY MUTUAL INSURANCE COMPANY INCORPORATED 1912 MASSACHUSETTS
WEST AMERICAN INSURANCE COMPANY INCORPORATED 1991 INDIANA

The Ohio Casualty Insurance Company
Liberty Mutual Insurance Company
West American Insurance Company

By: David M. Carey
David M. Carey, Assistant Secretary

STATE OF PENNSYLVANIA ss
COUNTY OF MONTGOMERY

On this 16th day of December, 2016, before me personally appeared David M. Carey, who acknowledged himself to be the Assistant Secretary of Liberty Mutual Insurance Company, The Ohio Casualty Company, and West American Insurance Company, and that he, as such, being authorized so to do, execute the foregoing instrument for the purposes therein contained by signing on behalf of the corporations by himself as a duly authorized officer.

IN WITNESS WHEREOF, I have hereunto subscribed my name and affixed my notarial seal at King of Prussia, Pennsylvania, on the day and year first above written.

TERESA PASTELLA COMMONWEALTH OF PENNSYLVANIA NOTARY PUBLIC

COMMONWEALTH OF PENNSYLVANIA
Notarial Seal
Teresa Pastella, Notary Public
Upper Merion Twp., Montgomery County
My Commission Expires March 28, 2017
Member, Pennsylvania Association of Notaries

By: Teresa Pastella
Teresa Pastella, Notary Public

This Power of Attorney is made and executed pursuant to and by authority of the following By-laws and Authorizations of The Ohio Casualty Insurance Company, Liberty Mutual Insurance Company, and West American Insurance Company which resolutions are now in full force and effect reading as follows:

ARTICLE IV – OFFICERS – Section 12. Power of Attorney. Any officer or other official of the Corporation authorized for that purpose in writing by the Chairman or the President, and subject to such limitation as the Chairman or the President may prescribe, shall appoint such attorneys-in-fact, as may be necessary to act in behalf of the Corporation to make, execute, seal, acknowledge and deliver as surety any and all undertakings, bonds, recognizances and other surety obligations. Such attorneys-in-fact, subject to the limitations set forth in their respective powers of attorney, shall have full power to bind the Corporation by their signature and execution of any such instruments and to attach thereto the seal of the Corporation. When so executed, such instruments shall be as binding as if signed by the President and attested to by the Secretary. Any power or authority granted to any representative or attorney-in-fact under the provisions of this article may be revoked at any time by the Board, the Chairman, the President or by the officer or officers granting such power or authority.

ARTICLE XIII – Execution of Contracts – SECTION 5. Surety Bonds and Undertakings. Any officer of the Company authorized for that purpose in writing by the chairman or the president, and subject to such limitations as the chairman or the president may prescribe, shall appoint such attorneys-in-fact, as may be necessary to act in behalf of the Company to make, execute, seal, acknowledge and deliver as surety any and all undertakings, bonds, recognizances and other surety obligations. Such attorneys-in-fact subject to the limitations set forth in their respective powers of attorney, shall have full power to bind the Company by their signature and execution of any such instruments and to attach thereto the seal of the Company. When so executed such instruments shall be as binding as if signed by the president and attested by the secretary.

Certificate of Designation – The President of the Company, acting pursuant to the Bylaws of the Company, authorizes David M. Carey, Assistant Secretary to appoint such attorneys-in-fact as may be necessary to act on behalf of the Company to make, execute, seal, acknowledge and deliver as surety any and all undertakings, bonds, recognizances and other surety obligations.

Authorization – By unanimous consent of the Company's Board of Directors, the Company consents that facsimile or mechanically reproduced signature of any assistant secretary of the Company, wherever appearing upon a certified copy of any power of attorney issued by the Company in connection with surety bonds, shall be valid and binding upon the Company with the same force and effect as though manually affixed.

I, Renee C. Llewellyn, the undersigned, Assistant Secretary, The Ohio Casualty Insurance Company, Liberty Mutual Insurance Company, and West American Insurance Company do hereby certify that the original power of attorney of which the foregoing is a full, true and correct copy of the Power of Attorney executed by said Companies, is in full force and effect and has not been revoked.

IN TESTIMONY WHEREOF, I have hereunto set my hand and affixed the seals of said Companies this 1st day of June, 20 17.

THE OHIO CASUALTY INSURANCE COMPANY INCORPORATED 1919 NEW HAMPSHIRE
LIBERTY MUTUAL INSURANCE COMPANY INCORPORATED 1912 MASSACHUSETTS
WEST AMERICAN INSURANCE COMPANY INCORPORATED 1991 INDIANA

By: Renee Llewellyn
Renee C. Llewellyn, Assistant Secretary

Not valid for mortgage, note, loan, letter of credit, currency rate, interest rate or individual value guarantees.

To confirm the validity of this Power of Attorney call 1-610-832-8240 between 9:00 am and 4:30 pm EST on any business day.

LIBERTY MUTUAL INSURANCE COMPANY

FINANCIAL STATEMENT — DECEMBER 31, 2016

Assets

Cash and Bank Deposits	$1,092,914,837
*Bonds — U.S Government	1,406,763,970
*Other Bonds	11,379,916,523
*Stocks	10,349,761,988
Real Estate	290,265,760
Agents' Balances or Uncollected Premiums	4,709,977,463
Accrued Interest and Rents	112,757,395
Other Admitted Assets	14,659,523,751
Total Admitted Assets	**$44,001,881,687**

Liabilities

Unearned Premiums		$6,929,723,299
Reserve for Claims and Claims Expense		17,233,877,300
Funds Held Under Reinsurance Treaties		208,362,823
Reserve for Dividends to Policyholders		944,909
Additional Statutory Reserve		39,649,905
Reserve for Commissions, Taxes and Other Liabilities		3,061,117,958
Total		**$27,473,676,194**
Special Surplus Funds	$95,257,334	
Capital Stock	10,000,000	
Paid in Surplus	9,229,250,104	
Unassigned Surplus	7,193,698,055	
Surplus to Policyholders		**16,528,205,493**
Total Liabilities and Surplus		**$44,001,881,687**

LIBERTY MUTUAL INSURANCE COMPANY INCORPORATED 1912 MASSACHUSETTS

* Bonds are stated at amortized or investment value; Stocks at Association Market Values.
The foregoing financial information is taken from Liberty Mutual Insurance Company's financial statement filed with the state of Massachusetts Department of Insurance.

I, TIM MIKOLAJEWSKI, Assistant Secretary of Liberty Mutual Insurance Company, do hereby certify that the foregoing is a true, and correct statement of the Assets and Liabilities of said Corporation, as of December 31, 2016, to the best of my knowledge and belief.

IN WITNESS WHEREOF, I have hereunto set my hand and affixed the seal of said Corporation at Seattle, Washington, this 23rd day of March, 2017.

T A Mikolajewski

Assistant Secretary

TRIUCON-01 MFANNING

ACORD

CERTIFICATE OF LIABILITY INSURANCE

DATE (MM/DD/YYYY) 6/2/2017

THIS CERTIFICATE IS ISSUED AS A MATTER OF INFORMATION ONLY AND CONFERS NO RIGHTS UPON THE CERTIFICATE HOLDER. THIS CERTIFICATE DOES NOT AFFIRMATIVELY OR NEGATIVELY AMEND, EXTEND OR ALTER THE COVERAGE AFFORDED BY THE POLICIES BELOW. THIS CERTIFICATE OF INSURANCE DOES NOT CONSTITUTE A CONTRACT BETWEEN THE ISSUING INSURER(S), AUTHORIZED REPRESENTATIVE OR PRODUCER, AND THE CERTIFICATE HOLDER.

IMPORTANT: If the certificate holder is an ADDITIONAL INSURED, the policy(ies) must have ADDITIONAL INSURED provisions or be endorsed. If SUBROGATION IS WAIVED, subject to the terms and conditions of the policy, certain policies may require an endorsement. A statement on this certificate does not confer rights to the certificate holder in lieu of such endorsement(s).

PRODUCER
Brown & Brown of New York Inc.
800 Westchester Avenue, N-311
Rye Brook, NY 10573

CONTACT NAME:
PHONE (A/C, No, Ext): (914) 337-1833 FAX (A/C, No): (914) 337-1596
E-MAIL ADDRESS: certificates@bbinsny.com

INSURER(S) AFFORDING COVERAGE	NAIC #
INSURER A : Travelers Property Casualty Company of America	25674
INSURER B : Navigators Insurance Company	42307
INSURER C : Great American Assurance Company	26344
INSURER D : Ironshore Indemnity Inc.	43647
INSURER E :	
INSURER F :	

INSURED
Triumph Construction Corp
1354 Seneca Ave
Bronx, NY 10474

COVERAGES CERTIFICATE NUMBER: REVISION NUMBER:

THIS IS TO CERTIFY THAT THE POLICIES OF INSURANCE LISTED BELOW HAVE BEEN ISSUED TO THE INSURED NAMED ABOVE FOR THE POLICY PERIOD INDICATED. NOTWITHSTANDING ANY REQUIREMENT, TERM OR CONDITION OF ANY CONTRACT OR OTHER DOCUMENT WITH RESPECT TO WHICH THIS CERTIFICATE MAY BE ISSUED OR MAY PERTAIN, THE INSURANCE AFFORDED BY THE POLICIES DESCRIBED HEREIN IS SUBJECT TO ALL THE TERMS, EXCLUSIONS AND CONDITIONS OF SUCH POLICIES. LIMITS SHOWN MAY HAVE BEEN REDUCED BY PAID CLAIMS.

INSR LTR	TYPE OF INSURANCE	ADDL INSD	SUBR WVD	POLICY NUMBER	POLICY EFF (MM/DD/YYYY)	POLICY EXP (MM/DD/YYYY)	LIMITS	
A	X COMMERCIAL GENERAL LIABILITY						EACH OCCURRENCE	$ 2,000,000
	CLAIMS-MADE X OCCUR			VTC2JCO4E994806TIL16	08/01/2016	08/01/2017	DAMAGE TO RENTED PREMISES (Ea occurrence)	$ 300,000
	X Contractual Liab						MED EXP (Any one person)	$ Excluded
	X X,C,U Included						PERSONAL & ADV INJURY	$ 1,000,000
	GEN'L AGGREGATE LIMIT APPLIES PER:						GENERAL AGGREGATE	$ 4,000,000
	POLICY X PROJECT LOC						PRODUCTS - COMP/OP AGG	$ 4,000,000
	X OTHER: 50' RR Excl Eliminate						Employee Ben	$ 1,000,000
	AUTOMOBILE LIABILITY						COMBINED SINGLE LIMIT (Ea accident)	$ 1,000,000
	ANY AUTO			FA16BAP02012000	08/01/2016	08/01/2017	BODILY INJURY (Per person)	$
	X OWNED AUTOS ONLY / SCHEDULED AUTOS						BODILY INJURY (Per accident)	$
	X HIRED AUTOS ONLY / X NON-OWNED AUTOS ONLY						PROPERTY DAMAGE (Per accident)	$
								$
C	UMBRELLA LIAB X OCCUR						EACH OCCURRENCE	$ 3,000,000
	X EXCESS LIAB CLAIMS-MADE			EXC3746797	08/01/2016	08/01/2017	AGGREGATE	$ 3,000,000
	DED X RETENTION $ 0							$
	WORKERS COMPENSATION AND EMPLOYERS' LIABILITY						PER STATUTE / OTHER	
	ANY PROPRIETOR/PARTNER/EXECUTIVE OFFICER/MEMBER EXCLUDED? (Mandatory in NH) Y/N	N/A					E.L. EACH ACCIDENT	$
	If yes, describe under DESCRIPTION OF OPERATIONS below						E.L. DISEASE - EA EMPLOYEE	$
							E.L. DISEASE - POLICY LIMIT	$
D	Errors & Omissions			002788300-01	05/30/2017	05/30/2018	Each Wrongful Act	1,000,000
B	Excess Liability			IS16EXC735358IV	08/01/2016	08/01/2017	EA Occ/Agg	10,000,000

DESCRIPTION OF OPERATIONS / LOCATIONS / VEHICLES (ACORD 101, Additional Remarks Schedule, may be attached if more space is required)
RE: Project ID - BED798 Replacement of trunk and distribution water mains, sewers and appurtenances in Flatbush Ave BET Sterling Place & 8th Avenue, Etc - Borough of Brooklyn

City of New York, including its officials and employees, and Consolidated Edison Company of New York are additional insured with regard to General and Excess Liability, as required by written contract.

City of New York, including its officials and employees are additional insured with regard to Automobile Liability, as required by written contract.

CERTIFICATE HOLDER

New York City Department of Design and Construction
30-30 Thomson Avenue
Long Island City, NY 11101

CANCELLATION

SHOULD ANY OF THE ABOVE DESCRIBED POLICIES BE CANCELLED BEFORE THE EXPIRATION DATE THEREOF, NOTICE WILL BE DELIVERED IN ACCORDANCE WITH THE POLICY PROVISIONS.

AUTHORIZED REPRESENTATIVE
M.F. Rollins III

© 1988-2015 ACORD CORPORATION. All rights reserved.
The ACORD name and logo are registered marks of ACORD

MFANNING

EVIDENCE OF PROPERTY INSURANCE

DATE (MM/DD/YYYY) 6/2/2017

THIS EVIDENCE OF PROPERTY INSURANCE IS ISSUED AS A MATTER OF INFORMATION ONLY AND CONFERS NO RIGHTS UPON THE ADDITIONAL INTEREST NAMED BELOW. THIS EVIDENCE DOES NOT AFFIRMATIVELY OR NEGATIVELY AMEND, EXTEND OR ALTER THE COVERAGE AFFORDED BY THE POLICIES BELOW. THIS EVIDENCE OF INSURANCE DOES NOT CONSTITUTE A CONTRACT BETWEEN THE ISSUING INSURER(S), AUTHORIZED REPRESENTATIVE OR PRODUCER, AND THE ADDITIONAL INTEREST.

AGENCY
PHONE (A/C, No, Ext): (914) 337-1833

Brown & Brown of New York Inc.
800 Westchester Avenue, N-311
Rye Brook, NY 10573

FAX (A/C, No): (914) 337-1596
E-MAIL ADDRESS: certificates@bbinsny.com

CODE:
SUB CODE:
AGENCY CUSTOMER ID #: TRIUCON-01

COMPANY
Charter Oak Fire Insurance Company (Travelers)
PO Box 6070
Glens Falls, NY 12801

INSURED
Triumph Construction Corp
1354 Seneca Ave
Bronx, NY 10474

LOAN NUMBER

POLICY NUMBER
660 3H989810

EFFECTIVE DATE 8/1/2016
EXPIRATION DATE 8/1/2017
☐ CONTINUED UNTIL TERMINATED IF CHECKED

THIS REPLACES PRIOR EVIDENCE DATED:

PROPERTY INFORMATION

LOCATION/DESCRIPTION
Engineer Field Office

THE POLICIES OF INSURANCE LISTED BELOW HAVE BEEN ISSUED TO THE INSURED NAMED ABOVE FOR THE POLICY PERIOD INDICATED. NOTWITHSTANDING ANY REQUIREMENT, TERM OR CONDITION OF ANY CONTRACT OR OTHER DOCUMENT WITH RESPECT TO WHICH THIS EVIDENCE OF PROPERTY INSURANCE MAY BE ISSUED OR MAY PERTAIN, THE INSURANCE AFFORDED BY THE POLICIES DESCRIBED HEREIN IS SUBJECT TO ALL THE TERMS, EXCLUSIONS AND CONDITIONS OF SUCH POLICIES. LIMITS SHOWN MAY HAVE BEEN REDUCED BY PAID CLAIMS.

COVERAGE INFORMATION

PERILS INSURED ☐ BASIC ☐ BROAD ☐ SPECIAL ☐

COVERAGE / PERILS / FORMS	AMOUNT OF INSURANCE	DEDUCTIBLE
Business Personal Property, Replacement Cost	$40,000	1,000

REMARKS (Including Special Conditions)

Special Conditions:
Project ID: BED798

CANCELLATION

SHOULD ANY OF THE ABOVE DESCRIBED POLICIES BE CANCELLED BEFORE THE EXPIRATION DATE THEREOF, NOTICE WILL BE DELIVERED IN ACCORDANCE WITH THE POLICY PROVISIONS.

ADDITIONAL INTEREST

NAME AND ADDRESS

☐ ADDITIONAL INSURED ☐ LENDER'S LOSS PAYABLE ☐ LOSS PAYEE
☐ MORTGAGEE

LOAN #

New York City Department of Design and Construction
30-30 Thomson Avenue
Long Island City, NY 11101

AUTHORIZED REPRESENTATIVE
M. F. Rollins III

© 1993-2015 ACORD CORPORATION. All rights reserved.
The ACORD name and logo are registered marks of ACORD

Project ID.: BED798

CERTIFICATION BY INSURANCE BROKER OR AGENT

The undersigned Insurance broker represents to the City of New York that the attached Certificate of Insurance is accurate in all material respects.

Brown & Brown of New York, Inc.
[Name Of Broker or Agent (Typewritten)]

800 Westchester Ave., Suite N-311, Rye Brook, NY 10573
[Address Of Broker or Agent (Typewritten)]

mfanning@bbinsny.com
[E-Mail Address Of Broker or Agent (Typewritten)]

914-337-1833/914-337-1596
[Phone Number/Fax Number Of Broker or Agent (Typewritten)]

[Signature Of Authorized Official, Broker or Agent]

Mary Fanning, Commercial Lines Manager
[Name And Title Of Authorized Official, Broker or Agent (Typewritten)]

State of New York)
) ss.:
County of Westchester)

Sworn to before me this 2nd day of June, 2017

Eileen Maloney
NOTARY PUBLIC FOR THE STATE OF New York

EILEEN MALONEY
NOTARY PUBLIC-STATE OF NEW YORK
No. 01MA6174339
Qualified in Westchester County
My Commission Expires September 17, 2019

STATE OF NEW YORK
WORKERS COMPENSTION BOARD

CERTIFICATE OF NYS WORKERS' COMPENSATION INSURANCE COVERAGE

1A. Legal Name & Address of Insured (Use street address only) *Triumph Construction Corp.* *1354 Seneca Avenue* *Bronx, NY 10474* **Work Location of Insured** ***(Only required if coverage is specifically limited to certain location in New York State, i.e., a Wrap-Up Policy)***	**1b. Business Telephone Number of Insured** (718) 861-6060 **1c. NYS Unemployment Insurance Employer Registration Number of Insured** 05-20171 **1d. Federal Employer Identification Number of Insured or Social Security Number** 13-4050635
2. Name and Address if the Entity Requesting Proof of Coverage (Entity Being Listed as the Certificate Holder) New York City Department of Design and Construction 30-30 Thompson Avenue Long Island City, NY 11101	**3a. Name of Insurance Carrier** Charter Oak Fire Insurance Co. **3b. Policy Number of entity listed in box "1a"** VTC20-UB-4E994081-15 **3c. Policy effective period** 8/01/2016 - 8/01/2017 **3d. The Proprietor, Partners or Executive Officers are** ☒ included. (only check box of all partners/officers included) ☐ all excluded or certain partners/officers excluded

This certifies that the insurance carrier indicated above in box "3" insures the business referenced above in box "1a" for workers' compensation under the New York State Workers' Compensation Law. (**To use this form, New York (NY) must be listed under Item 3A on the INFORMATION PAGE of the workers' compensation insurance policy**). The Insurance Carrier or its licensed agent will send this Certificate of Insurance to the entity listed above as the certificate holder in box "2".

The Insurance Carrier will also notify the above certificate holder within 10 days IF a policy is canceled due to nonpayment of premiums or within 30 days IF there are reasons other that nonpayment of premium that cancel the policy or eliminate the insured from the coverage indicated on this certificate. (These notices may be sent by regular mail) **Otherwise, this Certificate is valid for one year after this form is approved by the insurance carrier or its licensed agents, or until the policy expiration date listed in box "3c", whichever is earlier.**

Please note: Upon the cancellation of the workers' compensation policy indicated on this form, if the business continues to be named on a permit, license or contract issued by a certificate holder, the business must provide that certificate holder with a new Certificate of Workers' Compensation Coverage or other authorized proof that the business is complying with the mandatory coverage requirements of the New York State Workers Compensation Law.

Under penalty of perjury, I certify that I am an authorized representative or licensed agent of the insurance carrier referenced above and that the named insured has the coverage as depicted on this form.

Approved by: *John Moccia*
(Print name of authorized representative or licensed agent of insurance carrier)

Approved By: *John Moccia*
(Signature)

Title: Executive Vice President

Telephone Number of authorized representative or licensed agent of insurance carrier: 914-337-1833

Please note: Only insurance carriers and their licensed agents are authorized to issue Form C-105.2 Insurance Brokers are NOT authorized to issue it.

C-105.2 (9-07)

www.wcb.state.ny.us

Workers' Compensation Law

Section 57. Restriction on issue of permits and the entering into contracts unless compensation is secured.

1. The head of a state or municipal department, board, commission or office authorized or required by law to issue any permit for or in connection with any work involving the employment of employees in a hazardous employment defined by this chapter, and notwithstanding any general or special statute requiring or authorizing the issue of such permits, shall not issue such permit unless proof duly subscribed by an insurance carrier is produced in a form satisfactory to the chair, that compensation for all employees has been secured as provided by this chapter. Nothing herein, however, shall be construed as creating any liability on the part of such state or municipal department, board, commission or office to pay any compensation to any such employee if so employed.

2. The head of a state or municipal department, board, commission or office authorized or required by law to enter into any contract for or in connection with any work involving the employment of employees in a hazardous employment defined but this chapter , notwithstanding any general or special statute requiring or authorizing any such contract, shall not enter into any such contract unless proof duly subscribed by an insurance carrier is produced in a form satisfactory to the chair, that compensation for all employees has been secured as provided by this chapter.

STATE OF NEW YORK
WORKERS' COMPENSATION BOARD

CERTIFICATE OF INSURANCE COVERAGE UNDER THE NYS DISABILITY BENEFITS LAW

Part 1. To be completed by Disability Benefits Carrier or Licensed Insurance Agent of that Carrier

1a. Legal Name and Address of Insured (Use Street Address only) Triumph Construction Corp. 1354 Seneca Avenue Bronx, NY 10474	1b. Business Telephone Number of Insured (718) 861-6060 1c. NYS Unemployment Insurance Employer Registration Number of Insured 05-20171 1d. Federal Employer Identification Number of Insured or Social Security Number 13-4050635
2. Name and Address of the Entity Requesting Proof of Coverage (Entity Being Listed as the certificate holder) New York City Department of Design and Construction 30-30 Thompson Avenue Long Island City, NY 11101	3a. Name of Insurance Carrier Wesco Insurance Company 3b. Policy Number of entity listed in box "1a" 89100232606 3c. Policy effective period: 01/01/2017 - 08/01/2017

4. Policy covers:
   a. ☑ All of the employer's employees eligible under the New York Disability benefits Law
   b. ☐ Only the following class or classes of the employees:

Under penalty of perjury, I certify that I am an authorized representative or licensed agent of the insurance carrier referenced above and that the named insured has NYS Disability Benefits insurance coverage as described above.

Date Signed: By *John Moccia*
(Signature of insured's carrier's authorized representative of NYS Licensed Insurance Agent of that insurance carrier)

Telephone Number: 914-337-1833 Title: *Executive Vice President*

IMPORTANT: If box "4a" is checked and this form is signed by the insurance carrier's authorized representative or NYS Licensed Insurance Agent of that carrier, this certificate is COMPLETE. Mail it directly to the certificate holder. If box "4b" is checked, this certificate if NOT COMPLETE for purposes of Section 220. Subd, 6 of the Disability Benefits Law. It must be mailed for completion to the Workers' Compensation Board. DB Plans Acceptance Unit, 20 Park Street, Albany, New York 12207

PART2. To be completed by NYS Workers' Compensation Board (Only if box "4b" of Part 1 has been checked)

State Of New York
Workers' Compensation Board

According to information maintained by the NYS Workers Compensation Board, the above- named employer has complied with the NYS Disability Benefits law with respect to all of his/her employees.

Date Signed_____ By _____
(Signature of NYS Workers' Compensation Board Employee)

Telephone Number _____ Title_____

Please note: Only insurance carriers licensed to write NYS Disability benefits insurance polices and NYS Licensed insurance agents of those insurance carriers are authorized to issue Form DB-120.1. Insurance brokers are NOT authorized to issue this form.

DB-120.1 (5-06)

Additional Instructions for Form DB-120.1

By signing this form, the insurance carrier identified in box "3" on this form is certifying that it is insuring the business referenced in box "1a" for disability benefits under the New York State Disability Benefits Law. The Insurance Carrier or its licensed agent will send this Certificate of Insurance to the entity listed as the certificate holder in box "2". *This Certificate is valid for the earlier of one year after this form is approved by the insurance carrier or its licensed agent, or the policy expiration date listed in box "3c".*

Please Note: Upon the cancellation of the disability benefits policy indicated on this form, if the business continues to be named on a permit, license or contract issued by a certificate holder, the business must provide that certificate holder with a new Certificate of NYS Disability Benefits Coverage or other authorized proof that the business is complying with the mandatory coverage requirements of the New York State Disability Benefits Law.

DISABILITY BENEIFTS LAW

§ 220. Subd. 8

(a) The head of a state or municipal department, board, commission or office authorized or required by law to issue any permit for or in connection with any work involving the employment of employees in employment as defined in this article, and not withstanding any general or special statue requiring or authorizing the issue of such permits, shall not issue such permit unless proof duly subscribed by an insurance carrier is produced in a form satisfactory to the chair, that the payment of disability benefits for all employees has been secured as provided by this article. Nothing herein, however, shall be construed as creating any liability on the part of such state or municipal department, board, commission or office to pay any disability benefits to any such employee if so employed.

(b) The head of a state or municipal department, board, commission or office authorized or required by law to enter into any contract for or in connection with any work involving the employment of employees in employment as defined in this article, and notwithstanding any general or special statute requiring or authorizing any such contract, shall not enter into any such contract unless proof duly subscribed by an insurance carrier is produced in a form satisfactory to the chair, that the payment of disability benefits for all employees has been secured as provided by this article.

<u>Performance Bond #2 (Pages 96 to 99)</u>: Use if the total contract price is more than $5 Million.

good any such default and shall protect the said City of New York against, and pay any and all amounts, damages, cost and judgments which may or shall be recovered against said City or its officers or agents or which the said City of New York may be called upon to pay any person or corporation by reason of any damages arising or growing out of the Principal's default of the Contract, then this obligation shall be null and void, otherwise to remain in full force and effect.

The Surety (Sureties), for value received, hereby stipulates and agrees, upon written notice from the City that the City has determined that the Principal is in default of the Contract, to either (1) pay the full amount of the above penal sum in complete discharge and exoneration of this bond and of all the liabilities of the Surety relating to this bond, or (2) fully perform and complete the Work to be performed under the Contract, pursuant to the terms, conditions, and covenants thereof. The Surety (Sureties) further agrees, at its option, either to tender the penal sum or to commence and diligently perform the Work specified in the Contract, including physical site work, within twenty-five (25) business days after written notice thereof from the City and to complete all Work within the time set forth in the Contract or such other time as agreed to between the City and Surety in accordance with the Contract. The Surety and the City reserve all rights and defenses each may have against the other; provided, however, that the Surety expressly agrees that its reservation of rights shall not provide a basis for non-performance of its obligation to commence and to complete all Work as provided herein.

The Surety (Sureties), for value received, for itself and its successors and assigns, hereby stipulates and agrees that the obligation of said Surety (Sureties) and its bond shall be in no way impaired or affected by any extension of time, modification, omission, addition, or change in or to the said Contract or the Work to be performed thereunder, or by any payment thereunder before the time required therein, or by any waiver of any provisions thereof, or by any assignment, subletting or other transfer thereof or of any Work to be performed or any moneys due or to become due thereunder; and said Surety (Sureties) does hereby waive notice of any and all of such extensions, modifications, omissions, additions, changes, payments, waivers, assignments, subcontracts and transfers, and hereby expressly stipulates and agrees that any and all things done and omitted to be done by and in relation to assignees, subcontractors, and other transferees shall have the same effect as to said Surety (Sureties) as though done or omitted to be done by or in relation to said Principal.

<u>Performance Bond #2 (Pages 96 to 99)</u>: Use if the total contract price is more than $5 Million.

IN WITNESS WHEREOF, The Principal and the Surety (Sureties) have hereunto set their hands and seals, and such of them as are corporations have caused their corporate seals to be hereunto affixed and these presents to be signed by their proper officers, this

_____ day of _____ 20 _____ .

(Seal)

_____(L.S.)
Principal

By:_____.

(Seal)

Surety

By:_____.
_____.

(Seal)

Surety

By:_____.
_____.

(Seal)

Surety

By:_____.
_____.

(Seal)

Surety

By:_____.
_____.

(Seal)

Surety

By:_____.

Bond Premium Rate _____.

Bond Premium Cost _____.

If the Contractor (Principal) is a partnership, the bond should be signed by each of the individuals who are partners.

If the Contractor (Principal) is a corporation, the bond should be signed in its correct corporate name by a duly authorized officer, agent, or attorney-in-fact.

There should be executed an appropriate number of counterparts of the bond corresponding to the number of counterparts of the Contract.

Performance Bond #2 (Pages 96 to 99): Use if the total contract price is more than $5 Million.

ACKNOWLEDGMENT OF PRINCIPAL IF A CORPORATION

State of _____ County of _____ ss:

On this _____ day of _____, 20 _____ before me personally came _____,
to me known, who, being by me duly sworn did depose and say that he resides at _____
_____ ; that he/she is the _____
of the corporation described in and which executed the foregoing instrument; that he/she signed his/her name to the foregoing instrument by order of the directors of said corporation as the duly authorized and binding act thereof.

_____
Notary Public or Commissioner of Deeds.

ACKNOWLEDGMENT OF PRINCIPAL IF A PARTNERSHIP

State of _____ County of _____ ss:

On this _____ day of _____, 20 _____ before me personally came _____,
to me known, who, being by me duly sworn did depose and say that he/she resides at_____

_____; that he/she is _____ partner of _____, a limited/general partnership existing under the laws of the State of _____, the partnership described in and which executed the foregoing instrument; and that he/she signed his/her name to the foregoing instrument as the duly authorized and binding act of said partnership.

_____
Notary Public or Commissioner of Deeds

ACKNOWLEDGMENT OF PRINCIPAL IF AN INDIVIDUAL

State of _____ County of _____ ss:

On this _____ day of _____, 20_____ before me personally came _____,
to me known, who, being by me duly sworn did depose and say that he/she resides at_____
_____, and that he/she is the individual whose name is subscribed to the within instrument and acknowledged to me that by his/her signature on the instrument, said individual executed the instrument.

_____
Notary Public or Commissioner of Deeds

Each executed bond should be accompanied by: (a) appropriate acknowledgments of the respective parties; (b) appropriate duly certified copy of Power of Attorney or other certificate of authority where bond is executed by agent, officer or other representative of Principal or Surety; (c) a duly certified extract from By-Laws or resolutions of Surety under which Power of Attorney or other certificate of authority of its agent, officer or representative was issued, and (d) certified copy of latest published financial statement of assets and liabilities of Surety.

* * * * * * * *

Affix Acknowledgments and Justification of Sureties.

<u>Payment Bond (Pages 100 to 103)</u>: Use for any contract for which a Payment Bond is required.

PAYMENT BOND

KNOW ALL PERSONS BY THESE PRESENTS, That we, _____

_____

_____

_____

hereinafter referred to as the "Principal", and _____

_____

_____

_____

_____

hereinafter referred to as the "Surety" ("Sureties") are held and firmly bound to THE CITY OF NEW YORK, hereinafter referred to as the "City" or to its successors and assigns, in the penal sum of

_____

_____

_____

($_____) Dollars, lawful money of the United States, for the payment of which said sum of money well and truly to be made, we, and each of us, bind ourselves, our heirs, executors, administrators, successors and assigns, jointly and severally, firmly by these presents.

WHEREAS, the Principal is about to enter, or has entered, into a Contract in writing with the City for

_____

_____

_____

a copy of which Contract is annexed to and hereby made a part of this bond as though herein set forth in full;

NOW, THEREFORE, the conditions of this obligation are such that if the Principal, his or its representatives or assigns and other Subcontractors to whom Work under this Contract is sublet and his or their successors and assigns shall promptly pay or cause to be paid all lawful claims for

(a) Wages and compensation for labor performed and services rendered by all persons engaged in the prosecution of the Work under said Contract, and any amendment or extension thereof or addition thereto, whether such persons be agents servants or employees of the Principal or any such Subcontractor, including all persons so engaged who perform the work of laborers or mechanics at or in the vicinity of the site

of the Project regardless of any contractual relationship between the Principal or such Subcontractors, or his or their successors or assigns, on the one hand and such laborers or mechanics on the other, but not including office employees not regularly stationed at the site of the project; and

(b) Materials and supplies (whether incorporated in the permanent structure or not), as well as teams, fuels, oils, implements or machinery furnished, used or consumed by said Principal or any subcontractor at or in the vicinity of the site of the Project in the prosecution of the Work under said Contract and any amendment or extension thereof or addition thereto; then this obligation shall be void, otherwise to remain in full force and effect.

This bond is subject to the following additional conditions, limitations and agreements:

(a) The Principal and Surety (Sureties) agree that this bond shall be for the benefit of any materialmen or laborer having a just claim, as well as the City itself.

(b) All persons who have performed labor, rendered services or furnished materials and supplies, as aforesaid, shall have a direct right of action against the Principal and his, its or their successors and assigns, and the Surety (Sureties) herein, or against either or both or any of them and their successors and assigns. Such persons may sue in their own name, and may prosecute the suit to judgment and execution without the necessity of joining with any other persons as party plaintiff.

(c) The Principal and Surety (Sureties) agree that neither of them will hold the City liable for any judgment for costs of otherwise, obtained by either or both of them against a laborer or materialman in a suit brought by either a laborer or materialman under this bond for moneys allegedly due for performing work or furnishing material.

(d) The Surety (Sureties) or its successors and assigns shall not be liable for any compensation recoverable by an employee or laborer under the Workmen's Compensation Law.

(e) In no event shall the Surety (Sureties), or its successors or assigns, be liable for a greater sum than the penalty of this bond or be subject to any suit, action or proceeding hereon that is instituted by any person, firm, or corporation hereunder later than two years after the complete performance of said Contract and final settlement thereof.

The Principal, for himself and his successors and assigns, and the Surety (Sureties), for itself and its successors and assigns, do hereby expressly waive any objection that might be interposed as to the right of the City to require a bond containing the foregoing provisions, and they do hereby further expressly waive any defense which they or either of them might interpose to an action brought hereon by any person, firm or corporation, including subcontractors, materialmen and third persons, for work, labor, services, supplies or material performed rendered, or furnished as aforesaid upon the ground that there is no law authorizing the City to require the foregoing provisions to be place in this bond.

And the Surety (Sureties), for value received, for itself and its successors and assigns, hereby stipulates and agrees that the obligation of said Surety (Sureties), and its bonds shall be in no way impaired or affected by any extension of time, modification, omission, addition, or change in or of the said Contract or the work to be performed thereunder, or by any payment thereunder before the time required therein, or by any waiver of any provisions thereof, or by any assignment, subletting or other transfer thereof or of any part thereof, or of any Work to be performed, or any moneys due to become due thereunder and said Surety (Sureties) does hereby waive notice of any and all of such extensions, modifications, omissions, additions, changes, payments, waivers, assignments, subcontracts and transfers, and hereby expressly stipulates and agrees that any and all things done and omitted to be done by and in relation to assignees, Subcontractors, and other transferees shall have the same effect as to said Surety (Sureties) as though done or omitted to be done or in relation to said Principal.

<u>Payment Bond (Pages 100 to 103)</u>: Use for any contract for which a Payment Bond is required.

IN WITNESS WHEREOF, the Principal and the Surety (Sureties) have hereunto set their hands and seals, and such of them as are corporations have caused their corporate seals to be hereunto affixed and these presents to be signed by their proper officers, this _____ day of _____, _____.

(Seal) _____(L.S.)
Principal

By:_____

(Seal) _____
Surety

By:_____

(Seal) _____
Surety

By:_____

(Seal) _____
Surety

By:_____

(Seal) _____
Surety

By:_____

If the Contractor (Principal) is a partnership, the bond should be signed by each of the individuals who are partners.

If the Contractor (Principal) is a corporation, the bond should be signed in its correct corporate name by a duly authorized officer, agent, or attorney-in-fact.

There should be executed an appropriate number of counterparts of the bond corresponding to the number of counterparts of the Contract.

Payment Bond (Pages 100 to 103): Use for any contract for which a Payment Bond is required.

ACKNOWLEDGMENT OF PRINCIPAL, IF A CORPORATION

State of _____ County of _____ ss:

On this _____ day of _____, _____, before me personally came _____ to me known, who, being by me duly sworn did depose and say that he resides at _____ _____ that he is the _____ of the corporation described in and which executed the foregoing instrument; that he knows the seal of said corporation; that one of the seals affixed to said instrument is such seal; that it was so affixed by order of the directors of said corporation, and that he signed his name thereto by like order.

_____
Notary Public or Commissioner of Deeds

ACKNOWLEDGMENT OF PRINCIPAL, IF A PARTNERSHIP

State of _____ County of _____ ss:

On this _____ day of _____, _____, before me personally appeared _____ to me known, and known to me to be one of the members of the firm of _____ _____ described in and who executed the foregoing instrument; and he acknowledged to me that he executed the same as and for the act and deed of said firm.

_____
Notary Public or Commissioner of Deeds

ACKNOWLEDGMENT OF PRINCIPAL, IF AN INDIVIDUAL

State of _____ County of _____ ss:

On this _____ day of _____, _____, before me personally appeared _____ to me known, and known to me to be the person described in and who executed the foregoing instrument; and acknowledged that he executed the same.

_____
Notary Public or Commissioner of Deeds

Each executed bond should be accompanied by: (a) appropriate acknowledgments of the respective parties; (b) appropriate duly certified copy of Power of Attorney or other certificate of authority where bond is executed by agent, officer or other representative of Principal or Surety; (c) a duly certified extract from By-Laws or resolutions of Surety under which Power of Attorney or other certificate of authority of its agent, officer or representative was issued, and (d) certified copy of latest published financial statement of assets and liabilities of Surety.

* * * * * * * *

Affix Acknowledgments and Justification of Sureties.

(NO TEXT ON THIS PAGE)

SCHEDULE OF WORKMEN, MECHANICS AND LABORERS

The following is a list of classifications for workmen, mechanics and laborers which are anticipated to be employed in the performance of work under this contract, followed by a schedule of the prevailing wage rates and supplemental benefits for all classifications as established by the Comptroller of the City of New York.

Request for interpretation or correction under Subsection A of Section No. 3 in the Information for Bidders includes all requests for clarification of the classification of trades to be employed in the performance of the work under this contract.

In the event that a trade not listed in the classification of trades required to be used at the time of the award of the contract is in fact employed during the performance of this contract, the Contractor shall be required to obtain from the agency the prevailing wage rates and supplementary benefits for the trades used and to complete the performance of this contract at the price at which the contract was awarded.

CODE	CLASSIFICATION
15 42 001	Rigger
15 42 002	Sign Erector
16 11 001	Gardener
16 11 002	Tree Pruner
16 11 003	Tree Remover
16 11 011	Asphalt Raker (Highway & Paving)
16 11 012	Tamper (Highway & Paving)
16 11 013	Curbsetter (Highway & Paving)
16 11 014	Formsetter (Highway & Paving)
16 11 015	Rammerman (Highway & Paving)
16 11 016	Laborer (Highway & Paving)
16 11 017	ALL OTHER TITLES (Highway & Paving)
16 23 001	Laborer
16 23 002	Operating Engineer (Heavy Construction-Maintenance)
16 23 003	Junior Operating Engineer
16 23 004	Junior Operating Engineer
16 23 005	Junior Operating Engineer
16 23 006	Fireman (Heavy Construction)
16 23 007	Oiler (Heavy Construction)
16 23 051	Surveyor-Heavy Construction
16 23 052	Surveyor-Heavy Construction-Instrument Man
16 23 053	Surveyor-Heavy Construction-Rodman
16 23 057	Surveyor-Land Surveying-Party Chief
16 23 058	Surveyor-Land Surveying-Instrument Man
16 23 059	Surveyor-Land Surveying-Rodman

CODE	CLASSIFICATION
16 23 061	Operating Engineer-Road & Heavy Construction
16 23 062	Operating Engineer-Paving
16 23 063	Operating Engineer-Concrete
16 23 071	Teamster-Heavy Equipment Trailer Driver
16 23 072	Teamster-Dump Truck Driver
16 23 073	Teamster-Flat Bed Trailer Driver (3-Axle)
16 23 074	Teamster-Redi-Mix (Sand and Gravel)
16 29 011	Drill Runners
17 11 001	Plumbers
17 21 001	Painter (Brush & Roller)
17 31 001	Electrician
17 41 001	Bricklayer
17 41 002	Mason Tender
17 41 004	Cement Mason
17 42 002	Metallic Lather
17 51 001	Carpenter
17 51 002	Dock Builder
17 71 001	Cement & Concrete Worker
17 91 001	Structural Iron Worker
17 95 001	Barman
17 96 021	Derrickmen & Riggers
17 99 001	Ornamental Iron Worker
17 99 002	Sandblaster
17 99 005	Pointers (Waterproofer)
17 99 011	Welders

Each classification may include trainees depending upon project staffing schedules and as required by the terms of this contract.

LABOR LAW §220 PREVAILING WAGE SCHEDULE

Workers, Laborers and Mechanics employed on a public work project must receive not less than the prevailing rate of wage and benefits for the classification of work performed by each upon such public work. Pursuant to Labor Law §220 the Comptroller of the City of New York has promulgated this schedule solely for Workers, Laborers and Mechanics engaged by private contractors on New York City public work contracts.

This schedule is a compilation of separate determinations of the prevailing rate of wage and supplements made by the Comptroller for each trade classification listed herein pursuant to New York State Labor Law section 220 (5). The source of the wage and supplement rates, whether a collective bargaining agreement, survey data or other, is listed at the end of each classification.

Agency Chief Contracting Officers should contact the Bureau of Labor Law's Classification Unit with any questions concerning trade classifications, prevailing rates or prevailing practices with respect to procurement on New York City public works contracts. Contractors are advised to review the Comptroller's Prevailing Wage Schedule before bidding on public works contracts. Contractors with questions concerning trade classifications, prevailing rates or prevailing practices with respect to public works contracts in the procurement stage must contact the contracting agency responsible for the procurement.

Any error as to compensation under the prevailing wage law or other information as to trade classification, made by the contracting agency in the contract documents or in any other communication, will not preclude a finding against the contractor of prevailing wage violation.

Any questions concerning trade classifications, prevailing rates or prevailing practices on New York City public works contracts that have already been awarded may be directed to the Bureau of Labor Law's Classification Unit by calling (212) 669-7974. All callers must have the agency name and contract registration number available when calling with questions on public works contracts. Please direct all other compliance issues to: Bureau of Labor Law, Attn: Wasyl Kinach, P.E., Office of the Comptroller, 1 Centre Street, Room 1122, New York, N.Y. 10007; Fax (212) 669-4002.

The appropriate schedule of prevailing wages and benefits must be posted at all public work sites pursuant to Labor Law §220 (3-a) (a).

This schedule is applicable to work performed during the effective period, unless otherwise noted. Changes to this schedule are published on our web site www.comptroller.nyc.gov. Contractors must pay the wages and supplements in effect when the worker, laborer, mechanic performs the work. Preliminary schedules for future one-year periods appear in the City Record on or about June 1 each succeeding year. Final schedules appear on or about July 1 in the City Record and on our web site www.comptroller.nyc.gov.

The Comptroller's Office has attempted to include all overtime, shift and night differential, Holiday, Saturday, Sunday or other premium time work. However, this schedule does not set forth every prevailing practice with respect to such rates with which employers must comply. All such practices are nevertheless part of the employer's prevailing wage obligation and contained in the collective bargaining agreements of the prevailing wage unions. These collective bargaining agreements are available for inspection by appointment. Requests for appointments may be made by calling (212) 669-4443, Monday through Friday between the hours of 9 a.m. and 5 p.m.

Prevailing rates and ratios for apprentices are attached to this schedule in the Appendix. Pursuant to Labor Law §220 (3-e), only apprentices who are individually registered in a bona fide program to which the employer contractor is a participant, registered with the New York State Department of Labor, may be employed on a public work project. Workers who are not journey persons or not registered apprentices pursuant to Labor Law §220 (3-e) may not be substituted for apprentices and must be paid as journey persons.

Public Work construction, reconstruction, demolition, excavation, rehabilitation, repair, renovation, alteration, or improvement contracts awarded pursuant to a Project Labor Agreement ("PLA") in accordance with Labor Law section 222 may have different labor standards for shift, premium and overtime work. Please refer to the PLA's pre-negotiated labor agreements for wage and benefit rates applicable to work performed outside of the regular workday. More information is available at the Mayor's Office of Contract Services (MOCS) web page at http://www.nyc.gov/html/mocs/html/vendors/pla.shtml.

All the provisions of Labor Law section 220 remain applicable to PLA work including, but not limited to, the enforcement of prevailing wage requirements by the Comptroller; however, we will enforce shift, premium, overtime and other non-standard rates as they appear in a project's pre-negotiated labor agreement.

In order to meet their obligation to provide prevailing supplemental benefits to each covered employee, employers must either:

1) Provide bona-fide benefits which cost the employer no less than the prevailing supplemental benefits rate; or
2) Supplement the employee's hourly wage by an amount no less than the prevailing supplemental benefits rate; or
3) Provide a combination of bona-fide benefits and wage supplements which cost the employer no less than the prevailing supplemental benefits rate in total.

Particular attention should be given to the supplemental benefits requirement. Although in most instances the payment or provision for supplemental benefits is for each hour worked, some classifications require the payment or provision of supplemental benefits for each hour paid. Consequently, some prevailing practices require benefits to be purchased at the overtime, shift differential, Holiday, Saturday, Sunday or other premium time rate.

Benefits are paid for *EACH HOUR WORKED* unless otherwise noted.

Wasyl Kinach, P.E.
Director of Classifications
Bureau of Labor Law

TABLE OF CONTENTS

CLASSIFICATION	PAGE
ASBESTOS HANDLER	5
BLASTER	5
BOILERMAKER	7
BRICKLAYER	8
CARPENTER - BUILDING COMMERCIAL	9
CARPENTER - HEAVY CONSTRUCTION WORK	10
CARPENTER - SIDEWALK SHED, SCAFFOLD AND HOIST	11
CEMENT & CONCRETE WORKER	12
CEMENT MASON	13
CORE DRILLER	14
DERRICKPERSON AND RIGGER	15
DIVER	16
DOCKBUILDER - PILE DRIVER	17
DRIVER: TRUCK (TEAMSTER)	17
ELECTRICIAN	20
ELECTRICIAN - ALARM TECHNICIAN	23
ELECTRICIAN-STREET LIGHTING WORKER	24
ELEVATOR CONSTRUCTOR	26
ELEVATOR REPAIR & MAINTENANCE	27
ENGINEER	28
ENGINEER - CITY SURVEYOR AND CONSULTANT	32
ENGINEER - FIELD (BUILDING CONSTRUCTION)	33
ENGINEER - FIELD (HEAVY CONSTRUCTION)	34
ENGINEER - FIELD (STEEL ERECTION)	35
ENGINEER - OPERATING	36
FLOOR COVERER	44
GLAZIER	45
GLAZIER - REPAIR & MAINTENANCE	46
HEAT AND FROST INSULATOR	47
HOUSE WRECKER	48
IRON WORKER - ORNAMENTAL	49
IRON WORKER - STRUCTURAL	50
LABORER	50

LANDSCAPING 51
MARBLE MECHANIC 53
MASON TENDER 54
MASON TENDER (INTERIOR DEMOLITION WORKER) 55
METALLIC LATHER 56
MILLWRIGHT 57
MOSAIC MECHANIC 58
PAINTER 59
PAINTER - METAL POLISHER 60
PAINTER - STRIPER 61
PAINTER - STRUCTURAL STEEL 62
PAPERHANGER 63
PAVER AND ROADBUILDER 64
PLASTERER 65
PLASTERER - TENDER 66
PLUMBER 67
PLUMBER (MECHNICAL EQUIPMENT AND SERVICE) 68
PLUMBER (RESIDENTIAL RATES FOR 1, 2 AND 3 FAMILY HOME CONSTRUCTION) 69
PLUMBER: PUMP & TANK 70
POINTER, WATERPROOFER, CAULKER, SANDBLASTER, STEAMBLASTER 70
ROOFER 71
SHEET METAL WORKER 72
SHEET METAL WORKER - SPECIALTY 73
SHIPYARD WORKER 74
SIGN ERECTOR 75
STEAMFITTER 76
STEAMFITTER - REFRIGERATION AND AIR CONDITIONER 78
STONE MASON - SETTER 80
TAPER 81
TELECOMMUNICATION WORKER 81
TILE FINISHER 83
TILE LAYER - SETTER 83
TIMBERPERSON 84
TUNNEL WORKER 85
WELDER 87

ASBESTOS HANDLER
(Hazardous Material; Disturbs, removes, encapsulates, repairs, or encloses friable asbestos material)

Asbestos Handler

Effective Period: 7/1/2016 - 6/30/2017
Wage Rate per Hour: $36.00
Supplemental Benefit Rate per Hour: $16.45

Overtime
Time and one half the regular rate after an 8 hour day.
Time and one half the regular rate for Sunday.
Time and one half the regular hourly rate after 40 hours in any work week.

Overtime Holidays
Time and one half the regular rate for work on the following holiday(s).
New Year's Day
Good Friday
Memorial Day
Independence Day
Labor Day
Thanksgiving Day
Christmas Day
Easter

Paid Holidays
None

(Local #78 and Local #12A)

BLASTER

Blaster

Effective Period: 7/1/2016 - 6/30/2017
Wage Rate per Hour: $44.93
Supplemental Benefit Rate per Hour: $46.24

Blaster (Hydraulic)

Effective Period: 7/1/2016 - 6/30/2017

Wage Rate per Hour: $45.78
Supplemental Benefit Rate per Hour: $46.24

Blaster - Trac Drill Hydraulic

Effective Period: 7/1/2016 - 6/30/2017
Wage Rate per Hour: $40.12
Supplemental Benefit Rate per Hour: $46.24

Blaster - Wagon: Air Trac: Quarry Bar: Drillrunners

Effective Period: 7/1/2016 - 6/30/2017
Wage Rate per Hour: $39.31
Supplemental Benefit Rate per Hour: $46.24

Blaster - Operators of Jack Hammers

Chippers: Spaders: Concrete Breakers: and all other pneumatic tools of like usage: Walk Behind Self Propelled Hydraulic Asphalt and Concrete Breakers: Hydro (Water) Demolition

Effective Period: 7/1/2016 - 6/30/2017
Wage Rate per Hour: $38.23
Supplemental Benefit Rate per Hour: $46.24

Blaster - Powder Carriers

Effective Period: 7/1/2016 - 6/30/2017
Wage Rate per Hour: $34.20
Supplemental Benefit Rate per Hour: $46.24

Blaster - Hydraulic Trac Drill Chuck Tender

Effective Period: 7/1/2016 - 6/30/2017
Wage Rate per Hour: $32.88
Supplemental Benefit Rate per Hour: $46.24

Blaster - Chuck Tender & Nipper

Effective Period: 7/1/2016 - 6/30/2017
Wage Rate per Hour: $32.10
Supplemental Benefit Rate per Hour: $46.24

Blaster - Magazine Keepers: (Watch Person)

Effective Period: 7/1/2016 - 6/30/2017
Wage Rate per Hour: $17.80
Supplemental Benefit Rate per Hour: $46.24

Overtime Description

Magazine Keepers:
Time and one half for work performed in excess of forty (40) hours per week and for work performed on Saturdays, Sundays and Holidays.

All Other Employees:
Time and one-half for the first two hours of overtime Monday through Friday, the first ten hours, the first ten hours of work on Saturday and for Make-up Time. Double time for all hours over ten Monday through Saturday (except make-up hours) and for all hours worked on Sunday and Holidays.

Overtime Holidays

Double time the regular rate for work on the following holiday(s).
New Year's Day
Memorial Day
Independence Day
Labor Day
Columbus Day
Presidential Election Day
Thanksgiving Day
Christmas Day

Paid Holidays

None

Shift Rates

A single shift shall be 8 hours plus an unpaid lunch, starting at 8:00 A.M (or between 6:00 A.M. and 10:00 A.M. on weekdays). When two (2) shifts are employed, each shift shall be 8 hours plus ½ hour unpaid lunch. When three (3) shifts are employed, each shift will work seven and one-half (7 ½) hours, but will be paid for eight (8) hours, since only one-half (½) hour is allowed for mealtime. When two (2) or more shifts are employed, single time will be paid for each shift. The first 8 hours of any and all work performed Monday through Friday inclusive of any off-shift shall be at the single time rate.

(Local #29)

BOILERMAKER

Boilermaker

Effective Period: 7/1/2016 - 12/31/2016
Wage Rate per Hour: $53.36
Supplemental Benefit Rate per Hour: $42.33
Supplemental Note: For time and one half overtime - $62.88 For double overtime - $83.42

Effective Period: 1/1/2017 - 6/30/2017
Wage Rate per Hour: $55.23
Supplemental Benefit Rate per Hour: $42.96
Supplemental Note: For time and one half overtime - $63.82 For double overtime - $84.68

Overtime Description

For Repair and Maintenance work:
Time and one half the regular rate after an 8 hour day.
Time and one half the regular rate for Saturday.
Double time the regular rate for Sunday.
For New Construction work:
Double time the regular rate after an 8 hour day.
Double time the regular time rate for Saturday.
Double time the regular rate for Sunday.

Overtime Holidays

Double time the regular rate for work on the following holiday(s).
New Year's Day
President's Day
Memorial Day
Independence Day
Columbus Day
Election Day
Veteran's Day
Thanksgiving Day
Christmas Day

Quadruple time the regular rate for work on the following holiday(s).
Labor Day

Paid Holidays

Good Friday
Day after Thanksgiving
Day before Christmas
Day before New Year's Day

Shift Rates

When shifts are required, the first shift shall work eight (8) hours at the regular straight-time hourly rate. The second shift shall work seven and one-half (7 ½) hours and receive eight hours at the regular straight time hourly rate plus twenty-five cents ($0.25) per hour. The third shift shall work seven (7) hours and receive eight hours at the regular straight time hourly rate plus fifty cents ($0.50) per hour. A thirty (30) minute lunch period shall not be considered as time worked. Work in excess of the above shall be paid overtime at the appropriate new construction work or repair work overtime wage and supplemental benefit hourly rate.

(Local #5)

BRICKLAYER

Bricklayer

Effective Period: 7/1/2016 - 6/30/2017
Wage Rate per Hour: **$52.59**

Supplemental Benefit Rate per Hour: $30.00

Overtime
Time and one half the regular rate after a 7 hour day.
Time and one half the regular rate for Saturday.
Double time the regular rate for Sunday.
Saturday may be used as a make-up day at straight time when a day is lost during that week to inclement weather.

Overtime Holidays
Double time the regular rate for work on the following holiday(s).
New Year's Day
President's Day
Memorial Day
Independence Day
Labor Day
Thanksgiving Day
Christmas Day

Paid Holidays
None

Shift Rates
Overtime rates to be paid outside the regular scheduled work day.

(Bricklayer District Council)

CARPENTER - BUILDING COMMERCIAL

Building Commercial

Effective Period: 7/1/2016 - 6/30/2017
Wage Rate per Hour: $52.50
Supplemental Benefit Rate per Hour: $46.28

Overtime
Time and one half the regular rate after an 8 hour day.
Time and one half the regular rate for Saturday.
Double time the regular rate for Sunday.
Saturday may be used as a make-up day at straight time when a day is lost during that week to inclement weather.

Overtime Holidays
Double time the regular rate for work on the following holiday(s).
New Year's Day
Washington's Birthday

Memorial Day
Independence Day
Labor Day
Columbus Day
Presidential Election Day
Thanksgiving Day
Day after Thanksgiving
Christmas Day

Paid Holidays
None

Shift Rates
The second shift will receive one hour at the double time rate of pay for the last hour of the shift; eight hours pay for seven hours of work, nine hours pay for eight hours of work. There must be a first shift in order to work a second shift.

(Carpenters District Council)

CARPENTER - HEAVY CONSTRUCTION WORK
(Construction of Engineering Structures and Building Foundations)

Heavy Construction Work

Effective Period: 7/1/2016 - 6/30/2017
Wage Rate per Hour: $51.63
Supplemental Benefit Rate per Hour: $48.65

Overtime
Time and one half the regular rate after an 8 hour day.
Time and one half the regular rate for Saturday.
Double time the regular rate for Sunday.
Saturday may be used as a make-up day at straight time when a day is lost during that week to inclement weather.

Overtime Holidays
Double time the regular rate for work on the following holiday(s).
New Year's Day
President's Day
Memorial Day
Independence Day
Labor Day
Columbus Day
Presidential Election Day
Thanksgiving Day
Christmas Day

Paid Holidays
None

Shift Rates
Off shift work commencing between 5:00 P.M. and 11:00 P.M. shall work eight and one half hours allowing for one half hour for lunch. The wage rate shall be 113% of the straight time hourly wage rate.

(Carpenters District Council)

CARPENTER - SIDEWALK SHED, SCAFFOLD AND HOIST

Carpenter - Hod Hoist

(Assisted by Mason Tender)

Effective Period: 7/1/2016 - 6/30/2017
Wage Rate per Hour: $50.50
Supplemental Benefit Rate per Hour: $44.80

Overtime
Time and one half the regular rate after an 8 hour day.
Time and one half the regular rate for Saturday.
Double time the regular rate for Sunday.
Saturday may be used as a make-up day at straight time when a day is lost during that week to inclement weather.

Overtime Holidays
Double time the regular rate for work on the following holiday(s).
New Year's Day
President's Day
Memorial Day
Independence Day
Labor Day
Columbus Day
Presidential Election Day
Thanksgiving Day
Day after Thanksgiving
Christmas Day

Paid Holidays
None

Shift Rates

The second shift will receive one hour at the double time rate of pay for the last hour of the shift; eight hours pay for seven hours of work, nine hours pay for eight hours of work. There must be a first shift in order to work a second shift.

(Carpenters District Council)

CEMENT & CONCRETE WORKER

Cement & Concrete Worker

Effective Period: 7/1/2016 - 6/30/2017
Wage Rate per Hour: $42.48
Supplemental Benefit Rate per Hour: $23.00
Supplemental Note: $25.75 on Saturdays; $28.50 on Sundays & Holidays

Cement & Concrete Worker - (Hired after 2/6/2016)

Effective Period: 7/1/2016 - 6/30/2017
Wage Rate per Hour: $32.00
Supplemental Benefit Rate per Hour: $16.00
Supplemental Note: $17.25 on Saturdays; $18.50 on Sundays & Holidays

Overtime Description
Time and one half the regular rate after 7 hour day (time and one half the regular rate after an 8 hour day when working with Dockbuilders on pile cap forms and for work below street level to the top of the foundation wall, not to exceed 2 feet or 3 feet above the sidewalk-brick shelf, when working on the foundation and structure.)

Overtime
Time and one half the regular rate for Saturday.
Double time the regular rate for Sunday.

Overtime Holidays
Double time the regular rate for work on the following holiday(s).
New Year's Day
President's Day
Good Friday
Memorial Day
Independence Day
Labor Day
Columbus Day
Presidential Election Day
Thanksgiving Day
Christmas Day

Paid Holidays
1/2 day before Christmas Day

1/2 day before New Year's Day

Shift Rates

On shift work extending over a twenty-four hour period, all shifts are paid at straight time.

(Cement Concrete Workers District Council)

CEMENT MASON

Cement Mason

Effective Period: 7/1/2016 - 6/30/2017
Wage Rate per Hour: $40.72
Supplemental Benefit Rate per Hour: $38.96
Supplemental Note: For time and one half overtime - $48.21; For double overtime - $57.46

Overtime Description

Time and one-half the regular rate after an 8 hour day, double time the regular rate after 10 hours. Time and one-half the regular rate on Saturday, double time the regular rate after 10 hours. Double time the regular rate on Sunday.

Overtime Holidays

Double time the regular rate for work on the following holiday(s).
New Year's Day
President's Day
Good Friday
Memorial Day
Independence Day
Labor Day
Columbus Day
Presidential Election Day
Thanksgiving Day
Christmas Day

Paid Holidays

Any worker who reports to work on Christmas Eve or New Year's Eve pursuant to his employer's instruction shall be entitled to three (3) hours afternoon pay without working.

Shift Rates

For an off shift day, (work at times other than the regular 7:00 A.M. to 3:30 P.M. work day) a cement mason shall be paid at the regular hourly rate plus a 25% per hour differential. Four Days a week at Ten (10)hour day.

(Local #780) (BCA)

CORE DRILLER

Core Driller

Effective Period: 7/1/2016 - 6/30/2017
Wage Rate per Hour: $37.82
Supplemental Benefit Rate per Hour: $24.00

Core Driller Helper

Effective Period: 7/1/2016 - 6/30/2017
Wage Rate per Hour: $30.17
Supplemental Benefit Rate per Hour: $24.00

Core Driller Helper(Third year in the industry)

Effective Period: 7/1/2016 - 6/30/2017
Wage Rate per Hour: $27.15
Supplemental Benefit Rate per Hour: $24.00

Core Driller Helper (Second year in the industry)

Effective Period: 7/1/2016 - 6/30/2017
Wage Rate per Hour: $24.14
Supplemental Benefit Rate per Hour: $24.00

Core Driller Helper (First year in the industry)

Effective Period: 7/1/2016 - 6/30/2017
Wage Rate per Hour: $21.12
Supplemental Benefit Rate per Hour: $24.00

Overtime Description

Time and one half the regular rate for work on a holiday plus Holiday pay when worked.

Overtime

Time and one half the regular rate after an 8 hour day.
Time and one half the regular rate for Saturday.
Double time the regular rate for Sunday.
Time and one half the regular rate for work on the following holiday(s).

Paid Holidays

New Year's Day
Memorial Day
Independence Day
Labor Day

Thanksgiving Day
Christmas Day

Shift Rates

The shift day shall be the continuous eight and one-half (8½) hours from 6:00 A.M. to 2:30 P.M. and from 2:30 P.M. to 11:00 P.M., including one-half (½) hour of employees regular rate of pay for lunch. When two (2) or more shifts are employed, single time shall be paid for each shift, but those employees employed on a shift other than from 8:00 A.M. to 5:00 P.M. shall, in addition, receive seventy-five cents ($0.75) per hour differential for each hour worked. When three (3) shifts are needed, each shift shall work seven and one-half (7 ½) hours paid for eight (8) hours of labor and be permitted one-half (½) hour for mealtime.

(Carpenters District Council)

DERRICKPERSON AND RIGGER

Derrick Person & Rigger

Effective Period: 7/1/2016 - 6/30/2017
Wage Rate per Hour: $45.48
Supplemental Benefit Rate per Hour: $50.00
Supplemental Note: The above supplemental rate applies for work performed in Manhattan, Bronx, Brooklyn and Queens. $51.42 - For work performed in Staten Island.

Overtime Description

The first two hours of overtime on weekdays and the first seven hours of work on Saturdays are paid at time and one half for wages and supplemental benefits. All additional overtimes is paid at double time for wages and supplemental benefits. Deduct $1.42 from the Staten Island hourly benefits rate before computing overtime.

Overtime

Double time the regular rate for Sunday.

Overtime Holidays

Double time the regular rate for work on the following holiday(s).
New Year's Day
Washington's Birthday
Good Friday
Memorial Day
Independence Day
Labor Day
Thanksgiving Day
Christmas Day

Paid Holidays

1/2 day on Christmas Eve if work is performed in the A.M.

(Local #197)

DIVER

Diver (Marine)

Effective Period: 7/1/2016 - 6/30/2017
Wage Rate per Hour: $65.38
Supplemental Benefit Rate per Hour: $48.65

Diver Tender (Marine)

Effective Period: 7/1/2016 - 6/30/2017
Wage Rate per Hour: $46.44
Supplemental Benefit Rate per Hour: $48.65

Overtime

Time and one half the regular rate after an 8 hour day.
Time and one half the regular rate for Saturday.
Double time the regular rate for Sunday.
Saturday may be used as a make-up day at straight time when a day is lost during that week to inclement weather.

Overtime Holidays

Double time the regular rate for work on the following holiday(s).
New Year's Day
President's Day
Memorial Day
Independence Day
Labor Day
Columbus Day
Presidential Election Day
Thanksgiving Day
Christmas Day

Paid Holidays

None

Shift Rates

When three shifts are utilized each shift shall work seven and one half-hours (7 1/2 hours) and paid for 8 hours, allowing for one half hour for lunch.

(Carpenters District Council)

DOCKBUILDER - PILE DRIVER

Dockbuilder - Pile Driver

Effective Period: 7/1/2016 - 6/30/2017
Wage Rate per Hour: $51.63
Supplemental Benefit Rate per Hour: $48.65

Overtime
Time and one half the regular rate after an 8 hour day.
Time and one half the regular rate for Saturday.
Double time the regular rate for Sunday.
Saturday may be used as a make-up day at straight time when a day is lost during that week to inclement weather.

Overtime Holidays
Double time the regular rate for work on the following holiday(s).
New Year's Day
President's Day
Memorial Day
Independence Day
Labor Day
Columbus Day
Presidential Election Day
Thanksgiving Day
Christmas Day

Paid Holidays
None

Shift Rates
Off shift work commencing between 5:00 P.M. and 11:00 P.M. shall work eight and one half hours allowing for one half hour for lunch. The wage rate shall be 113% of the straight time hourly wage rate.

(Carpenters District Council)

DRIVER: TRUCK (TEAMSTER)

Driver - Dump Truck

Effective Period: 7/1/2016 - 6/30/2017
Wage Rate per Hour: $40.15
Supplemental Benefit Rate per Hour: $43.39
Supplemental Note: Over 40 hours worked: at time and one half rate - $18.44; at double time rate - $24.58

Driver - Tractor Trailer

Effective Period: 7/1/2016 - 6/30/2017
Wage Rate per Hour: $41.46
Supplemental Benefit Rate per Hour: $43.65
Supplemental Note: Over 40 hours worked: at time and one half rate - $16.65; at double time rate - $22.20

Driver - Euclid & Turnapull Operator

Effective Period: 7/1/2016 - 6/30/2017
Wage Rate per Hour: $42.03
Supplemental Benefit Rate per Hour: $43.65
Supplemental Note: Over 40 hours worked: at time and one half rate - $16.65; at double time rate - $22.20

Overtime Description

For Paid Holidays: Holiday pay for all holidays shall be prorated based two hours per day for each day worked in the holiday week, not to exceed 8 hours of holiday pay. For Thanksgiving week, the prorated share shall be 5 1/3 hours of holiday pay for each day worked in Thanksgiving week.

Overtime

Time and one half the regular rate after an 8 hour day.
Time and one half the regular rate for Saturday.
Double time the regular rate for Sunday.

Overtime Holidays

Double time the regular rate for work on the following holiday(s).
New Year's Day
President's Day
Memorial Day
Independence Day
Labor Day
Columbus Day
Veteran's Day
Thanksgiving Day
Day after Thanksgiving
Christmas Day

Paid Holidays

New Year's Day
President's Day
Memorial Day
Independence Day
Labor Day
Columbus Day
Veteran's Day
Thanksgiving Day
Day after Thanksgiving
Christmas Day

Shift Rates

Off single shift work commencing between 6:00 P.M. and 5:00 A.M. shall work eight and one half hours allowing for one half hour for lunch and receive 9 hours pay for 8 hours of work.

Driver Redi-Mix (Sand & Gravel)

Effective Period: 7/1/2016 - 6/30/2017
Wage Rate per Hour: $36.30
Supplemental Benefit Rate per Hour: $40.02
Supplemental Note: Over 40 hours worked: time and one half rate $13.90, double time rate $18.53

Overtime Description

For Paid Holidays: Employees working two (2) days in the calendar week in which the holiday falls are to paid for these holidays, provided they shape each remaining workday during that calendar week.

Overtime

Time and one half the regular rate after an 8 hour day.
Time and one half the regular rate for Saturday.
Double time the regular rate for Sunday.

Overtime Holidays

Double time the regular rate for work on the following holiday(s).
President's Day
Columbus Day
Veteran's Day

Triple time the regular rate for work on the following holiday(s).
New Year's Day
Memorial Day
Independence Day
Labor Day
Thanksgiving Day
Christmas Day

Paid Holidays

New Year's Day
President's Day
Memorial Day
Independence Day
Labor Day
Columbus Day
Election Day
Thanksgiving Day
Christmas Day

(Local #282)

ELECTRICIAN
(Including all low voltage cabling carrying data; video; and voice in combination with data and or video.)

Electrician "A" (Regular Day)

Effective Period: 7/1/2016 - 5/10/2017
Wage Rate per Hour: $54.00
Supplemental Benefit Rate per Hour: $51.86

Effective Period: 5/11/2017 - 6/30/2017
Wage Rate per Hour: $56.00
Supplemental Benefit Rate per Hour: $54.35

Electrician "A" (Regular Day Overtime)

Effective Period: 7/1/2016 - 5/10/2017
Wage Rate per Hour: $81.00
Supplemental Benefit Rate per Hour: $55.24

Effective Period: 5/11/2017 - 6/30/2017
Wage Rate per Hour: $84.00
Supplemental Benefit Rate per Hour: $57.86

Electrician "A" (Day Shift)

Effective Period: 7/1/2016 - 5/10/2017
Wage Rate per Hour: $54.00
Supplemental Benefit Rate per Hour: $51.86

Effective Period: 5/11/2017 - 6/30/2017
Wage Rate per Hour: $56.00
Supplemental Benefit Rate per Hour: $54.35

Electrician "A" (Day Shift Overtime After 8 hours)

Effective Period: 7/1/2016 - 5/10/2017
Wage Rate per Hour: $81.00
Supplemental Benefit Rate per Hour: $55.24

Effective Period: 5/11/2017 - 6/30/2017
Wage Rate per Hour: $84.00
Supplemental Benefit Rate per Hour: $57.86

Electrician "A" (Swing Shift)

Effective Period: 7/1/2016 - 5/10/2017

Wage Rate per Hour: $63.36
Supplemental Benefit Rate per Hour: $59.01

Effective Period: 5/11/2017 - 6/30/2017
Wage Rate per Hour: $65.71
Supplemental Benefit Rate per Hour: $61.94

Electrician "A" (Swing Shift Overtime After 7.5 hours)

Effective Period: 7/1/2016 - 5/10/2017
Wage Rate per Hour: $95.04
Supplemental Benefit Rate per Hour: $62.98

Effective Period: 5/11/2017 - 6/30/2017
Wage Rate per Hour: $98.57
Supplemental Benefit Rate per Hour: $66.05

Electrician "A" (Graveyard Shift)

Effective Period: 7/1/2016 - 5/10/2017
Wage Rate per Hour: $70.97
Supplemental Benefit Rate per Hour: $65.05

Effective Period: 5/11/2017 - 6/30/2017
Wage Rate per Hour: $73.60
Supplemental Benefit Rate per Hour: $68.33

Electrician "A" (Graveyard Shift Overtime After 7 hours)

Effective Period: 7/1/2016 - 5/10/2017
Wage Rate per Hour: $106.46
Supplemental Benefit Rate per Hour: $69.50

Effective Period: 5/11/2017 - 6/30/2017
Wage Rate per Hour: $110.40
Supplemental Benefit Rate per Hour: $72.95

Overtime

Time and one half the regular rate after a 7 hour day.
Time and one half the regular rate for Saturday.
Time and one half the regular rate for Sunday.

Overtime Holidays

Time and one half the regular rate for work on a holiday.
New Year's Day
Martin Luther King Jr. Day
President's Day
Memorial Day
Independence Day
Labor Day

Columbus Day
Veteran's Day
Thanksgiving Day
Day after Thanksgiving
Christmas Day

Paid Holidays

None

Shift Rates

When so elected by the Employer, one or more shifts of at least five days duration may be scheduled as follows: Day Shift: 8:00 am to 4:30 pm, Swing Shift 4:30 pm to 12:30 am, Graveyard Shift: 12:30 am to 8:00 am.

For multiple shifts of temporary light and/or power, the temporary light and/or power employee shall be paid for 8 hours at the straight time rate. For three or less workers performing 8 hours temporary light and/or power the supplemental benefit rate is $25.14 and effective 5/11/17 $25.67.

Electrician "M" (First 8 hours)

"M" rated work shall be defined as jobbing: electrical work of limited duration and scope, also consisting of repairs and/or replacement of electrical and tele-data equipment. Includes all work necessary to retrofit, service, maintain and repair all kinds of lighting fixtures and local lighting controls and washing and cleaning of foregoing fixtures.

Effective Period: 7/1/2016 - 5/10/2017
Wage Rate per Hour: $28.00
Supplemental Benefit Rate per Hour: $21.85
First and Second Year "M" Wage Rate Per Hour: $23.50
First and Second Year "M" Supplemental Rate: $19.54

Effective Period: 5/11/2017 - 6/30/2017
Wage Rate per Hour: $28.50
Supplemental Benefit Rate per Hour: $22.10
First and Second Year "M" Wage Rate Per Hour: $24.00
First and Second Year "M" Supplemental Rate: $19.80

Electrician "M" (Overtime After First 8 hours)

"M" rated work shall be defined as jobbing: electrical work of limited duration and scope, also consisting of repairs and/or replacement of electrical and tele-data equipment. Includes all work necessary to retrofit, service, maintain and repair all kinds of lighting fixtures and local lighting controls and washing and cleaning of foregoing fixtures.

Effective Period: 7/1/2016 - 5/10/2017
Wage Rate per Hour: $42.00
Supplemental Benefit Rate per Hour: $23.60
First and Second Year "M" Wage Rate Per Hour: $35.25
First and Second Year "M" Supplemental Rate: $21.01

Effective Period: 5/11/2017 - 6/30/2017
Wage Rate per Hour: $42.75
Supplemental Benefit Rate per Hour: $23.89
First and Second Year "M" Wage Rate Per Hour: $36.00
First and Second Year "M" Supplemental Rate: $21.30

Overtime

Time and one half the regular rate after an 8 hour day.
Time and one half the regular rate for Saturday.
Time and one half the regular rate for Sunday.

Overtime Holidays

Time and one half the regular rate for work on the following holiday(s).
New Year's Day
Martin Luther King Jr. Day
President's Day
Memorial Day
Independence Day
Labor Day
Columbus Day
Veteran's Day
Thanksgiving Day
Day after Thanksgiving
Christmas Day

Paid Holidays

None

(Local #3)

ELECTRICIAN - ALARM TECHNICIAN

(Scope of Work - Inspect, test, repair, and replace defective, malfunctioning, or broken devices, components and controls of Fire, Burglar and Security Systems)

Alarm Technician

Effective Period: 7/1/2016 - 3/9/2017
Wage Rate per Hour: $32.00
Supplemental Benefit Rate per Hour: $15.47
Supplemental Note: $13.97 only after 8 hours worked in a day

Effective Period: 3/10/2017 - 6/30/2017
Wage Rate per Hour: $32.40
Supplemental Benefit Rate per Hour: $16.10

Supplemental Note: $14.60 only after 8 hours worked in a day

Overtime Description

Time and one half the regular rate for work on the following holidays: Columbus Day, Veterans Day, Day after Thanksgiving.
Double time the regular rate for work on the following holidays: New Year's day, Martin Luther King Jr. Day, President's Day, Memorial Day, Independence Day, Labor Day, Thanksgiving Day, Christmas Day.

Overtime

Time and one half the regular rate after an 8 hour day.
Time and one half the regular rate for Saturday.
Double time the regular rate for Sunday.

Paid Holidays

New Year's Day
Martin Luther King Jr. Day
President's Day
Memorial Day
Independence Day
Labor Day
Columbus Day
Veteran's Day
Thanksgiving Day
Day after Thanksgiving
Christmas Day

Shift Rates

Night Differential is based upon a ten percent (10%) differential between the hours of 4:00 P.M. and 12:30 A.M. and a fifteen percent (15%) differential for the hours 12:00 A.M. to 8:00 A.M.

Vacation

At least 1 year of employment.....ten (10) days
5 years or more of employment.....fifteen (15) days
10 years of employment.....twenty (20) days
Plus one Personal Day per year

Sick Days:
One day per Year. Up to 4 vacation days may be used as sick days.

(Local #3)

ELECTRICIAN-STREET LIGHTING WORKER

Electrician - Electro Pole Electrician

Effective Period: 7/1/2016 - 5/17/2017
Wage Rate per Hour: $54.00
Supplemental Benefit Rate per Hour: $53.69

Effective Period: 5/18/2017 - 6/30/2017
Wage Rate per Hour: $56.00
Supplemental Benefit Rate per Hour: $56.26

Electrician - Electro Pole Foundation Installer

Effective Period: 7/1/2016 - 5/17/2017
Wage Rate per Hour: $40.93
Supplemental Benefit Rate per Hour: $40.12

Effective Period: 5/18/2017 - 6/30/2017
Wage Rate per Hour: $41.54
Supplemental Benefit Rate per Hour: $41.02

Electrician - Electro Pole Maintainer

Effective Period: 7/1/2016 - 5/17/2017
Wage Rate per Hour: $35.05
Supplemental Benefit Rate per Hour: $36.11

Effective Period: 5/18/2017 - 6/30/2017
Wage Rate per Hour: $35.58
Supplemental Benefit Rate per Hour: $36.89

Overtime Description

Electrician - Electro Pole Electrician: Time and one half the regular rate after a 7 hour day and after 5 consecutive days worked per week.
Electrician - Electro Pole Foundation Installer: Time and one half the regular rate after 8 hours within a 24 hour period and Saturday and Sunday.
Electrician - Electro Pole Maintainer: Time and one half the regular rate after a 7 hour day and after 5 consecutive days worked per week. Saturdays and Sundays may be used as a make-up day at straight time when a day is lost during the week to inclement weather.

Overtime Holidays

Time and one half the regular rate for work on the following holiday(s).
New Year's Day
Martin Luther King Jr. Day
President's Day
Memorial Day
Independence Day
Labor Day
Columbus Day
Veteran's Day
Thanksgiving Day
Day after Thanksgiving
Christmas Day

Paid Holidays

None

(Local #3)

ELEVATOR CONSTRUCTOR

Elevator Constructor

Effective Period: 7/1/2016 - 3/16/2017
Wage Rate per Hour: $60.96
Supplemental Benefit Rate per Hour: $32.65

Effective Period: 3/17/2017 - 6/30/2017
Wage Rate per Hour: $62.64
Supplemental Benefit Rate per Hour: $34.25

Overtime Description

For New Construction: work performed after 7 or 8 hour day, Saturday, Sunday or between 4:30pm and 7:00am shall be paid at double time rate.

Existing buildings: work performed after an 8 hour day, Saturday, Sunday or between 5:30pm and 7:00 am shall be paid time and one half.

Overtime

Double time the regular rate for work on the following holiday(s).

Paid Holidays

New Year's Day
President's Day
Good Friday
Memorial Day
Independence Day
Labor Day
Columbus Day
Veteran's Day
Thanksgiving Day
Day after Thanksgiving
Christmas Day

Vacation

Employer contributes 8% of regular basic hourly rate as vacation pay for employees with more than 15 years of service, and 6% for employees with 5 to 15 years of service, and 4% for employees with less than 5 years of service.

(Local #1)

ELEVATOR REPAIR & MAINTENANCE

Elevator Service/Modernization Mechanic

Effective Period: 7/1/2016 - 3/16/2017
Wage Rate per Hour: $47.91
Supplemental Benefit Rate per Hour: $32.51

Effective Period: 3/17/2017 - 6/30/2017
Wage Rate per Hour: $49.14
Supplemental Benefit Rate per Hour: $34.11

Overtime Description
For Scheduled Service Work: Double time - work scheduled in advance by two or more workers performed on Sundays, Holidays, and between midnight and 7:00am.

Overtime
Time and one half the regular rate after an 8 hour day.
Time and one half the regular rate for Saturday.
Time and one half the regular rate for Sunday.
Time and one half the regular rate for work on a holiday plus the day's pay.

Paid Holidays
New Year's Day
President's Day
Good Friday
Memorial Day
Independence Day
Labor Day
Columbus Day
Veteran's Day
Thanksgiving Day
Day after Thanksgiving
Christmas Day

Shift Rates
Afternoon shift - regularly hourly rate plus a (15%) fifteen percent differential. Graveyard shift - time and one half the regular rate.

Vacation
Employer contributes 8% of regular basic hourly rate as vacation pay for employees with more than 15 years of service, and 6% for employees with 5 to 15 years of service, and 4% for employees with less than 5 years of service.

(Local #1)

ENGINEER

Engineer - Heavy Construction Operating Engineer I

Cherrypickers 20 tons and over and Loaders (rubber tired and/or tractor type with a manufacturer's minimum rated capacity of six cubic yards and over).

Effective Period: 7/1/2016 - 6/30/2017
Wage Rate per Hour: $65.94
Supplemental Benefit Rate per Hour: $35.41
Supplemental Note: $63.67 on overtime
Shift Wage Rate: $105.50

Engineer - Heavy Construction Operating Engineer II

Backhoes, Basin Machines, Groover, Mechanical Sweepers, Bobcat, Boom Truck, Barrier Transport (Barrier Mover) & machines of similar nature. Operation of Churn Drills and machines of a similar nature, Stetco Silent Hoist and machines of similar nature, Vac-Alls, Meyers Machines, John Beam and machines of a similar nature, Ross Carriers and Travel Lifts and machines of a similar nature, Bulldozers, Scrapers and Turn-a-Pulls: Tugger Hoists (Used exclusively for handling excavated material); Tractors with attachments, Hyster and Roustabout Cranes, Cherrypickers. Austin Western, Grove and machines of a similar nature, Scoopmobiles, Monorails, Conveyors, Trenchers: Loaders-Rubber Tired and Tractor: Barber Greene and Eimco Loaders and Eimco Backhoes; Mighty Midget and similar breakers and Tampers, Curb and Gutter Pavers and Motor Patrol, Motor Graders and all machines of a similar nature. Locomotives 10 Tons or under. Mini-Max, Break-Tech and machines of a similar nature; Milling machines, robotic and demolition machines and machines of a similar nature, shot blaster, skid steer machines and machines of a similar nature including bobcat, pile rig rubber-tired excavator (37,000 lbs. and under), 2 man auger.

Effective Period: 7/1/2016 - 6/30/2017
Wage Rate per Hour: $63.98
Supplemental Benefit Rate per Hour: $35.41
Supplemental Note: $63.67 on overtime
Shift Wage Rate: $102.37

Engineer - Heavy Construction Operating Engineer III

Minor Equipment such as Tractors, Post Hole Diggers, Ditch Witch (Walk Behind), Road Finishing Machines, Rollers five tons and under, Tugger Hoists, Dual Purpose Trucks, Fork Lifts, and Dempsey Dumpers, Fireperson.

Effective Period: 7/1/2016 - 6/30/2017
Wage Rate per Hour: $60.69
Supplemental Benefit Rate per Hour: $35.41
Supplemental Note: $63.67 on overtime
Shift Wage Rate: $97.10

Engineer - Heavy Construction Maintenance Engineer I

Installing, Repairing, Maintaining, Dismantling and Manning of all equipment including Steel Cutting, Bending and Heat Sealing Machines, Mechanical Heaters, Grout Pumps, Bentonite Pumps & Plants, Screening Machines, Fusion Coupling Machines, Tunnel Boring Machines Moles and Machines of a similar nature, Power Packs, Mechanical Hydraulic Jacks; all drill rigs including but not limited to Churn, Rotary Caisson, Raised Bore & Drills

of a similar nature; Personnel, Inspection & Safety Boats or any boats used to perform functions of same, Mine Hoists, Whirlies, all Climbing Cranes, all Tower Cranes, including but not limited to Truck Mounted and Crawler Type and machines of similar nature; Maintaining Hydraulic Drills and machines of a similar nature; Well Point System-Installation and dismantling; Burning, Welding, all Pumps regardless of size and/or motor power, except River Cofferdam Pumps and Wells Point Pumps; Motorized Buggies (three or more); equipment used in the cleaning and televising of sewers, but not limited to jet-rodder/vacuum truck, vacall/vactor, closed circuit television inspection equipment; high powered water pumps, jet pumps; screed machines and concrete finishing machines of a similar nature; vermeers.

Effective Period: 7/1/2016 - 6/30/2017
Wage Rate per Hour: $63.68
Supplemental Benefit Rate per Hour: $35.41
Supplemental Note: $63.67 on overtime
Shift Wage Rate: $101.89

Engineer - Heavy Construction Maintenance Engineer II

On Base Mounted Tower Cranes

Effective Period: 7/1/2016 - 6/30/2017
Wage Rate per Hour: $83.66
Supplemental Benefit Rate per Hour: $35.41
Supplemental Note: $63.67 on overtime
Shift Wage Rate: $133.86

Engineer - Heavy Construction Maintenance Engineer III

On Generators, Light Towers

Effective Period: 7/1/2016 - 6/30/2017
Wage Rate per Hour: $42.01
Supplemental Benefit Rate per Hour: $35.41
Supplemental Note: $63.67 on overtime
Shift Wage Rate: $67.22

Engineer - Heavy Construction Maintenance Engineer IV

On Pumps and Mixers including mud sucking

Effective Period: 7/1/2016 - 6/30/2017
Wage Rate per Hour: $43.11
Supplemental Benefit Rate per Hour: $35.41
Supplemental Note: $63.67 on overtime
Shift Wage Rate: $68.98

Engineer - Heavy Construction Oilers I

Gradalls, Cold Planer Grader, Concrete Pumps, Driving Truck Cranes, Driving and Operating Fuel and Grease Trucks.

Effective Period: 7/1/2016 - 6/30/2017

Wage Rate per Hour: $57.42
Supplemental Benefit Rate per Hour: $35.41
Supplemental Note: $63.67 on overtime
Shift Wage Rate: $91.87

Engineer - Heavy Construction Oilers II

All gasoline, electric, diesel or air operated Shovels, Draglines, Backhoes, Keystones, Pavers, Gunite Machines, Battery of Compressors, Crawler Cranes, two-person Trenching Machines.

Effective Period: 7/1/2016 - 6/30/2017
Wage Rate per Hour: $39.70
Supplemental Benefit Rate per Hour: $35.41
Supplemental Note: $63.67 on overtime
Shift Wage Rate: $63.52

Engineer - Steel Erection Maintenance Engineers

Derrick, Travelers, Tower, Crawler Tower and Climbing Cranes

Effective Period: 7/1/2016 - 6/30/2017
Wage Rate per Hour: $61.13
Supplemental Benefit Rate per Hour: $35.41
Supplemental Note: $63.67 on overtime
Shift Wage Rate: $97.81

Engineer - Steel Erection Oiler I

On a Truck Crane

Effective Period: 7/1/2016 - 6/30/2017
Wage Rate per Hour: $57.21
Supplemental Benefit Rate per Hour: $35.41
Supplemental Note: $63.67 on overtime
Shift Wage Rate: $91.54

Engineer - Steel Erection Oiler II

On a Crawler Crane

Effective Period: 7/1/2016 - 6/30/2017
Wage Rate per Hour: $43.54
Supplemental Benefit Rate per Hour: $35.41
Supplemental Note: $63.67 on overtime
Shift Wage Rate: $69.66

Overtime Description

On jobs of more than one shift, if the next shift employee fails to report for work through any cause over which the employer has no control, the employee on duty who works the next shift continues to work at the single time rate.

Overtime

Double time the regular rate after an 8 hour day.
Double time the regular time rate for Saturday.
Double time the regular rate for Sunday.
Double time the regular rate for work on the following holiday(s).

Paid Holidays

New Year's Day
Lincoln's Birthday
President's Day
Memorial Day
Independence Day
Labor Day
Columbus Day
Veteran's Day
Thanksgiving Day
Day after Thanksgiving
Christmas Day
Employees must work at least one day in the payroll week in which the holiday occurs to receive the paid holiday

---

Engineer - Building Work Maintenance Engineers I

Installing, repairing, maintaining, dismantling (of all equipment including: Steel Cutting and Bending Machines, Mechanical Heaters, Mine Hoists, Climbing Cranes, Tower Cranes, Linden Peine, Lorain, Liebherr, Mannes, or machines of a similar nature, Well Point Systems, Deep Well Pumps, Concrete Mixers with loading Device, Concrete Plants, Motor Generators when used for temporary power and lights), skid steer machines of a similar nature including bobcat.

Effective Period: 7/1/2016 - 6/30/2017
Wage Rate per Hour: $58.30
Supplemental Benefit Rate per Hour: $35.41
Supplemental Note: $63.67 on overtime

Engineer - Building Work Maintenance Engineers II

On Pumps, Generators, Mixers and Heaters

Effective Period: 7/1/2016 - 6/30/2017
Wage Rate per Hour: $45.28
Supplemental Benefit Rate per Hour: $35.41
Supplemental Note: $63.67 on overtime

Engineer - Building Work Oilers I

All gasoline, electric, diesel or air operated Gradealls: Concrete Pumps, Overhead Cranes in Power Houses: Their duties shall be to assist the Engineer in oiling, greasing and repairing of all machines; Driving Truck Cranes: Driving and Operating Fuel and Grease Trucks, Cherrypickers (hydraulic cranes) over 70,000 GVW, and machines of a similar nature.

Effective Period: 7/1/2016 - 6/30/2017
Wage Rate per Hour: $55.42
Supplemental Benefit Rate per Hour: $35.41
Supplemental Note: $63.67 on overtime

Engineer - Building Work Oilers II

Oilers on Crawler Cranes, Backhoes, Trenching Machines, Gunite Machines, Compressors (three or more in Battery).

Effective Period: 7/1/2016 - 6/30/2017
Wage Rate per Hour: $41.16
Supplemental Benefit Rate per Hour: $35.41
Supplemental Note: $63.67 on overtime

Overtime Description
On jobs of more than one shift, if an Employee fails to report for work through any cause over which the Employer has no control, the Employee on duty will continue to work at the rate of single time.

Overtime
Double time the regular rate after an 8 hour day.
Double time the regular time rate for Saturday.
Double time the regular rate for Sunday.
Double time the regular rate for work on the following holiday(s).

Paid Holidays
New Year's Day
Lincoln's Birthday
President's Day
Memorial Day
Independence Day
Labor Day
Columbus Day
Veteran's Day
Thanksgiving Day
Christmas Day
Employees must work at least one day in the payroll week in which the holiday occurs to receive the paid holiday

Shift Rates
Off Shift: double time the regular hourly rate.

(Local #15)

ENGINEER - CITY SURVEYOR AND CONSULTANT

Party Chief

Effective Period: 7/1/2016 - 6/30/2017
Wage Rate per Hour: $38.18
Supplemental Benefit Rate per Hour: $20.15
Supplemental Note: Overtime Benefit Rate - $27.65 per hour (time & one half) $35.15 per hour (double time).

Instrument Person

Effective Period: 7/1/2016 - 6/30/2017
Wage Rate per Hour: $31.47
Supplemental Benefit Rate per Hour: $20.15
Supplemental Note: Overtime Benefit Rate - $27.65 per hour (time & one half) $35.15 per hour (double time).

Rodperson

Effective Period: 7/1/2016 - 6/30/2017
Wage Rate per Hour: $27.24
Supplemental Benefit Rate per Hour: $20.15
Supplemental Note: Overtime Benefit Rate - $27.65 per hour (time & one half) $35.15 per hour (double time).

Overtime Description

Time and one half the regular rate after an 8 hour day, Time and one half the regular rate for Saturday for the first eight hours worked, Double time the regular time rate for Saturday for work performed in excess of eight hours, Double time the regular rate for Sunday and Double time the regular rate for work on a holiday.

Paid Holidays

New Year's Day
Lincoln's Birthday
President's Day
Memorial Day
Independence Day
Labor Day
Columbus Day
Veteran's Day
Thanksgiving Day
Day after Thanksgiving
Christmas Day
Employees must work at least one day in the payroll week in which the holiday occurs to receive the paid holiday

(Operating Engineer Local #15-D)

ENGINEER - FIELD (BUILDING CONSTRUCTION)
(Construction of Building Projects, Concrete Superstructures, etc.)

Field Engineer - BC Party Chief

Effective Period: 7/1/2016 - 6/30/2017
Wage Rate per Hour: $60.10
Supplemental Benefit Rate per Hour: $32.15
Supplemental Note: Overtime Benefit Rate - $44.90 per hour (time & one half) $57.65 per hour (double time).

Field Engineer - BC Instrument Person

Effective Period: 7/1/2016 - 6/30/2017
Wage Rate per Hour: $46.69
Supplemental Benefit Rate per Hour: $32.15
Supplemental Note: Overtime Benefit Rate - $44.90 per hour (time & one half) $57.65 per hour (double time).

Field Engineer - BC Rodperson

Effective Period: 7/1/2016 - 6/30/2017
Wage Rate per Hour: $30.20
Supplemental Benefit Rate per Hour: $32.15
Supplemental Note: Overtime Benefit Rate - $44.90 per hour (time & one half) $57.65 per hour (double time).

Overtime Description

Time and one half the regular rate after a 7 hour work and time and one half the regular rate for Saturday for the first seven hours worked, Double time the regular time rate for Saturday for work performed in excess of seven hours, Double time the regular rate for Sunday and Double time the regular rate for work on a holiday.

Paid Holidays

New Year's Day
President's Day
Good Friday
Memorial Day
Independence Day
Labor Day
Columbus Day
Veteran's Day
Thanksgiving Day
Christmas Day
Employees must work at least one day in the payroll week in which the holiday occurs to receive the paid holiday

(Operating Engineer Local #15-D)

ENGINEER - FIELD (HEAVY CONSTRUCTION)

(Construction of Roads, Tunnels, Bridges, Sewers, Building Foundations, Engineering Structures etc.)

Field Engineer - HC Party Chief

Effective Period: 7/1/2016 - 6/30/2017
Wage Rate per Hour: $68.09
Supplemental Benefit Rate per Hour: $33.54
Supplemental Note: Overtime benefit rate - $46.86 per hour (time & one half), $60.18 per hour (double time).

Field Engineer - HC Instrument Person

Effective Period: 7/1/2016 - 6/30/2017
Wage Rate per Hour: $49.98
Supplemental Benefit Rate per Hour: $33.54
Supplemental Note: Overtime benefit rate - $46.86 per hour (time & one half), $60.18 per hour (double time).

Field Engineer - HC Rodperson

Effective Period: 7/1/2016 - 6/30/2017
Wage Rate per Hour: $41.93
Supplemental Benefit Rate per Hour: $33.54
Supplemental Note: Overtime benefit rate - $46.86 per hour (time & one half), $60.18 per hour (double time).

Overtime Description

Time and one half the regular rate after an 8 hour day, Time and one half the regular rate for Saturday for the first eight hours worked, Double time the regular time rate for Saturday for work performed in excess of eight hours, Double time the regular rate for Sunday and Double time the regular rate for work on a holiday.

Paid Holidays

New Year's Day
Lincoln's Birthday
President's Day
Memorial Day
Independence Day
Labor Day
Columbus Day
Veteran's Day
Thanksgiving Day
Christmas Day
Employees must work at least one day in the payroll week in which the holiday occurs to receive the paid holiday

(Operating Engineer Local #15-D)

ENGINEER - FIELD (STEEL ERECTION)

Field Engineer - Steel Erection Party Chief

Effective Period: 7/1/2016 - 6/30/2017
Wage Rate per Hour: $63.64
Supplemental Benefit Rate per Hour: $33.04
Supplemental Note: Overtime benefit rate - $46.11 per hour (time & one half), $59.18 per hour (double time).

Field Engineer - Steel Erection Instrument Person

Effective Period: 7/1/2016 - 6/30/2017
Wage Rate per Hour: $49.59
Supplemental Benefit Rate per Hour: $33.04
Supplemental Note: Overtime benefit rate - $46.11 per hour (time & one half), $59.18 per hour (double time).

Field Engineer - Steel Erection Rodperson

Effective Period: 7/1/2016 - 6/30/2017
Wage Rate per Hour: $33.20
Supplemental Benefit Rate per Hour: $33.04
Supplemental Note: Overtime benefit rate - $46.11 per hour (time & one half), $59.18 per hour (double time).

Overtime Description
Time and one half the regular rate for Saturday for the first eight hours worked.
Double time the regular rate for Saturday for work performed in excess of eight hours.

Overtime
Time and one half the regular rate after an 8 hour day.
Double time the regular rate for Sunday.
Double time the regular rate for work on the following holiday(s).

Paid Holidays
New Year's Day
Lincoln's Birthday
President's Day
Memorial Day
Independence Day
Labor Day
Columbus Day
Veteran's Day
Thanksgiving Day
Christmas Day
Employees must work at least one day in the payroll week in which the holiday occurs to receive the paid holiday

(Operating Engineer Local #15-D)

ENGINEER - OPERATING

Operating Engineer - Road & Heavy Construction I

Back Filling Machines, Cranes, Mucking Machines and Dual Drum Paver.

Effective Period: 7/1/2016 - 6/30/2017
Wage Rate per Hour: $73.90
Supplemental Benefit Rate per Hour: $31.10
Supplemental Note: $56.50 overtime hours
Shift Wage Rate: $118.24

Operating Engineer - Road & Heavy Construction II

Backhoes, Power Shovels, Hydraulic Clam Shells, Steel Erection, Moles and machines of a similar nature.

Effective Period: 7/1/2016 - 6/30/2017
Wage Rate per Hour: $76.51
Supplemental Benefit Rate per Hour: $31.10
Supplemental Note: $56.50 overtime hours
Shift Wage Rate: $122.42

Operating Engineer - Road & Heavy Construction III

Mine Hoists, Cranes, etc. (Used as Mine Hoists)

Effective Period: 7/1/2016 - 6/30/2017
Wage Rate per Hour: $78.96
Supplemental Benefit Rate per Hour: $31.10
Supplemental Note: $56.50 overtime hours
Shift Wage Rate: $126.34

Operating Engineer - Road & Heavy Construction IV

Gradealls, Keystones, Cranes on land or water (with digging buckets), Bridge Cranes, Vermeer Cutter and machines of a similar nature, Trenching Machines.

Effective Period: 7/1/2016 - 6/30/2017
Wage Rate per Hour: $77.07
Supplemental Benefit Rate per Hour: $31.10
Supplemental Note: $56.50 overtime hours
Shift Wage Rate: $123.31

Operating Engineer - Road & Heavy Construction V

Pile Drivers & Rigs (employing Dock Builder foreperson): Derrick Boats, Tunnel Shovels.

Effective Period: 7/1/2016 - 6/30/2017
Wage Rate per Hour: $75.55
Supplemental Benefit Rate per Hour: $31.10
Supplemental Note: $56.50 overtime hours
Shift Wage Rate: $120.88

Operating Engineer - Road & Heavy Construction VI

Mixers (Concrete with loading attachment), Concrete Pavers, Cableways, Land Derricks, Power Houses (Low Air Pressure Units).

Effective Period: 7/1/2016 - 6/30/2017
Wage Rate per Hour: $71.78
Supplemental Benefit Rate per Hour: $31.10
Supplemental Note: $56.50 overtime hours
Shift Wage Rate: $114.85

Operating Engineer - Road & Heavy Construction VII

Barrier Movers , Barrier Transport and Machines of a Similar Nature.

Effective Period: 7/1/2016 - 6/30/2017
Wage Rate per Hour: $57.96
Supplemental Benefit Rate per Hour: $31.10
Supplemental Note: $56.50 overtime hours
Shift Wage Rate: $92.74

Operating Engineer - Road & Heavy Construction VIII

Utility Compressors

Effective Period: 7/1/2016 - 6/30/2017
Wage Rate per Hour: $44.98
Supplemental Benefit Rate per Hour: $31.10
Supplemental Note: $56.50 overtime hours
Shift Wage Rate: $56.70

Operating Engineer - Road & Heavy Construction IX

Horizontal Boring Rig

Effective Period: 7/1/2016 - 6/30/2017
Wage Rate per Hour: $68.25
Supplemental Benefit Rate per Hour: $31.10
Supplemental Note: $56.50 overtime hours
Shift Wage Rate: $109.20

Operating Engineer - Road & Heavy Construction X

Elevators (manually operated as personnel hoist).

Effective Period: 7/1/2016 - 6/30/2017
Wage Rate per Hour: $62.73
Supplemental Benefit Rate per Hour: $31.10
Supplemental Note: $56.50 overtime hours
Shift Wage Rate: $100.37

Operating Engineer - Road & Heavy Construction XI

Compressors (Portable 3 or more in battery), Driving of Truck Mounted Compressors, Well-point Pumps, Tugger Machines Well Point Pumps, Churn Drill.

Effective Period: 7/1/2016 - 6/30/2017
Wage Rate per Hour: $48.73
Supplemental Benefit Rate per Hour: $31.10
Supplemental Note: $56.50 overtime hours
Shift Wage Rate: $77.97

Operating Engineer - Road & Heavy Construction XII

All Drills and Machines of a similar nature.

Effective Period: 7/1/2016 - 6/30/2017
Wage Rate per Hour: $72.53
Supplemental Benefit Rate per Hour: $31.10
Supplemental Note: $56.50 overtime hours
Shift Wage Rate: $116.05

Operating Engineer - Road & Heavy Construction XIII

Concrete Pumps, Concrete Plant, Stone Crushers, Double Drum Hoist, Power Houses (other than above).

Effective Period: 7/1/2016 - 6/30/2017
Wage Rate per Hour: $70.24
Supplemental Benefit Rate per Hour: $31.10
Supplemental Note: $56.50 overtime hours
Shift Wage Rate: $112.38

Operating Engineer - Road & Heavy Construction XIV

Concrete Mixer

Effective Period: 7/1/2016 - 6/30/2017
Wage Rate per Hour: $67.16
Supplemental Benefit Rate per Hour: $31.10
Supplemental Note: $56.50 overtime hours
Shift Wage Rate: $107.46

Operating Engineer - Road & Heavy Construction XV

Compressors (Portable Single or two in Battery, not over 100 feet apart), Pumps (River Cofferdam) and Welding Machines, Push Button Machines, All Engines Irrespective of Power (Power-Pac) used to drive auxiliary equipment, Air, Hydraulic, etc.

Effective Period: 7/1/2016 - 6/30/2017
Wage Rate per Hour: $45.27

Supplemental Benefit Rate per Hour: $31.10
Supplemental Note: $56.50 overtime hours
Shift Wage Rate: $72.43

Operating Engineer - Road & Heavy Construction XVI

Concrete Breaking Machines, Hoists (Single Drum), Load Masters, Locomotives (over ten tons) and Dinkies over ten tons, Hydraulic Crane-Second Engineer.

Effective Period: 7/1/2016 - 6/30/2017
Wage Rate per Hour: $64.13
Supplemental Benefit Rate per Hour: $31.10
Supplemental Note: $56.50 overtime hours
Shift Wage Rate: $102.61

Operating Engineer - Road & Heavy Construction XVII

On-Site concrete plant engineer, On-site Asphalt Plant Engineer, and Vibratory console.

Effective Period: 7/1/2016 - 6/30/2017
Wage Rate per Hour: $64.63
Supplemental Benefit Rate per Hour: $31.10
Supplemental Note: $56.50 overtime hours
Shift Wage Rate: $103.41

Operating Engineer - Road & Heavy Construction XVIII

Tower Crane

Effective Period: 7/1/2016 - 6/30/2017
Wage Rate per Hour: $92.76
Supplemental Benefit Rate per Hour: $31.10
Supplemental Note: $56.50 overtime hours
Shift Wage Rate: $148.42

Operating Engineer - Paving I

Asphalt Spreaders, Autograde (C.M.I.), Roto/Mil

Effective Period: 7/1/2016 - 6/30/2017
Wage Rate per Hour: $71.78
Supplemental Benefit Rate per Hour: $31.10
Supplemental Note: $56.50 overtime hours
Shift Wage Rate: $114.85

Operating Engineer - Paving II

Asphalt Roller

Effective Period: 7/1/2016 - 6/30/2017

Wage Rate per Hour: $69.91
Supplemental Benefit Rate per Hour: $31.10
Supplemental Note: $56.50 overtime hours
Shift Wage Rate: $111.86

Operating Engineer - Paving III

Asphalt Plants

Effective Period: 7/1/2016 - 6/30/2017
Wage Rate per Hour: $59.14
Supplemental Benefit Rate per Hour: $31.10
Supplemental Note: $56.50 overtime hours
Shift Wage Rate: $94.62

Operating Engineer - Concrete I

Cranes

Effective Period: 7/1/2016 - 6/30/2017
Wage Rate per Hour: $76.73
Supplemental Benefit Rate per Hour: $31.10
Supplemental Note: $56.50 overtime hours

Operating Engineer - Concrete II

Compressors

Effective Period: 7/1/2016 - 6/30/2017
Wage Rate per Hour: $45.62
Supplemental Benefit Rate per Hour: $31.10
Supplemental Note: $56.50 overtime hours

Operating Engineer - Concrete III

Micro-traps (Negative Air Machines), Vac-All Remediation System.

Effective Period: 7/1/2016 - 6/30/2017
Wage Rate per Hour: $61.31
Supplemental Benefit Rate per Hour: $31.10
Supplemental Note: $56.50 overtime hours

Operating Engineer - Steel Erection I

Three Drum Derricks

Effective Period: 7/1/2016 - 6/30/2017
Wage Rate per Hour: $79.54
Supplemental Benefit Rate per Hour: $31.10
Supplemental Note: $56.50 overtime hours

Shift Wage Rate: $127.26

Operating Engineer - Steel Erection II

Cranes, 2 Drum Derricks, Hydraulic Cranes, Fork Lifts and Boom Trucks.

Effective Period: 7/1/2016 - 6/30/2017
Wage Rate per Hour: $76.43
Supplemental Benefit Rate per Hour: $31.10
Supplemental Note: $56.50 overtime hours
Shift Wage Rate: $122.29

Operating Engineer - Steel Erection III

Compressors, Welding Machines.

Effective Period: 7/1/2016 - 6/30/2017
Wage Rate per Hour: $45.34
Supplemental Benefit Rate per Hour: $31.10
Supplemental Note: $56.50 overtime hours
Shift Wage Rate: $72.54

Operating Engineer - Steel Erection IV

Compressors - Not Combined with Welding Machine.

Effective Period: 7/1/2016 - 6/30/2017
Wage Rate per Hour: $43.17
Supplemental Benefit Rate per Hour: $31.10
Supplemental Note: $56.50 overtime hours
Shift Wage Rate: $69.07

Operating Engineer - Building Work I

Forklifts, Plaster (Platform machine), Plaster Bucket, Concrete Pump and all other equipment used for hoisting material.

Effective Period: 7/1/2016 - 6/30/2017
Wage Rate per Hour: $63.12
Supplemental Benefit Rate per Hour: $31.10
Supplemental Note: $56.50 overtime hours

Operating Engineer - Building Work II

Compressors, Welding Machines (Cutting Concrete-Tank Work), Paint Spraying, Sandblasting, Pumps (with the exclusion of Concrete Pumps), All Engines irrespective of Power (Power-Pac) used to drive Auxiliary Equipment, Air, Hydraulic, Jacking System, etc.

Effective Period: 7/1/2016 - 6/30/2017
Wage Rate per Hour: $47.26

Supplemental Benefit Rate per Hour: $31.10
Supplemental Note: $56.50 overtime hours

Operating Engineer - Building Work III

Double Drum

Effective Period: 7/1/2016 - 6/30/2017
Wage Rate per Hour: $71.85
Supplemental Benefit Rate per Hour: $31.10
Supplemental Note: $56.50 overtime hours

Operating Engineer - Building Work IV

Stone Derrick, Cranes, Hydraulic Cranes Boom Trucks.

Effective Period: 7/1/2016 - 6/30/2017
Wage Rate per Hour: $76.12
Supplemental Benefit Rate per Hour: $31.10
Supplemental Note: $56.50 overtime hours

Operating Engineer - Building Work V

Dismantling and Erection of Cranes, Relief Engineer.

Effective Period: 7/1/2016 - 6/30/2017
Wage Rate per Hour: $70.13
Supplemental Benefit Rate per Hour: $31.10
Supplemental Note: $56.50 overtime hours

Operating Engineer - Building Work VI

4 Pole Hoist, Single Drum Hoists.

Effective Period: 7/1/2016 - 6/30/2017
Wage Rate per Hour: $69.39
Supplemental Benefit Rate per Hour: $31.10
Supplemental Note: $56.50 overtime hours

Operating Engineer - Building Work VII

Rack & Pinion and House Cars

Effective Period: 7/1/2016 - 6/30/2017
Wage Rate per Hour: $55.17
Supplemental Benefit Rate per Hour: $31.10
Supplemental Note: $56.50 overtime hours
For New House Car projects Wage Rate per Hour $44.02

Overtime Description

On jobs of more than one shift, if an Employee fails to report for work through any cause over which the Employer has no control, the Employee on duty will continue to work at the rate of single time.

For House Cars and Rack & Pinion only: Overtime paid at time and one-half for all hours in excess of eight hours in a day, Saturday, Sunday and Holidays worked.

Overtime

Double time the regular rate after an 8 hour day.
Double time the regular time rate for Saturday.
Double time the regular rate for Sunday.
Double time the regular rate for work on the following holiday(s).

Paid Holidays

New Year's Day
Lincoln's Birthday
President's Day
Memorial Day
Independence Day
Labor Day
Columbus Day
Veteran's Day
Thanksgiving Day
Day after Thanksgiving
Christmas Day
Employees must work at least one day in the payroll week in which the holiday occurs to receive the paid holiday

Shift Rates

For Steel Erection Only: Shifts may be worked at the single time rate at other than the regular working hours (8:00 A.M. to 4:30 P.M.) on the following work ONLY: Heavy construction jobs on work below the street level, over railroad tracks and on building jobs.

(Operating Engineer Local #14)

FLOOR COVERER

(Interior vinyl composition tile, sheath vinyl linoleum and wood parquet tile including site preparation and synthetic turf not including site preparation)

Floor Coverer

Effective Period: 7/1/2016 - 6/30/2017
Wage Rate per Hour: $50.50
Supplemental Benefit Rate per Hour: $45.88

Overtime

Time and one half the regular rate after an 8 hour day.

Time and one half the regular rate for Saturday.
Double time the regular rate for Sunday.

Overtime Holidays

Double time the regular rate for work on the following holiday(s).
New Year's Day
President's Day
Memorial Day
Independence Day
Labor Day
Columbus Day
Presidential Election Day
Thanksgiving Day
Day after Thanksgiving
Christmas Day

Paid Holidays

1/2 day on Christmas Eve if work is performed in the A.M.
1/2 day on New Year's Eve if work is performed in the A.M.

Shift Rates

Two shifts may be utilized with the first shift working 8:00 A.M. to the end of the shift at the straight time of pay. The second shift will receive one hour at double time rate for the last hour of the shift. (eight for seven, nine for eight).

(Carpenters District Council)

GLAZIER
(New Construction, Remodeling, and Alteration)

Glazier

Effective Period: 7/1/2016 - 6/30/2017
Wage Rate per Hour: $44.45
Supplemental Benefit Rate per Hour: $37.84
Supplemental Note: Supplemental Benefit Overtime Rate: $46.84

Overtime Description

An optional 8th hour can be worked at straight time rate. If 9th hour is worked, then both hours or more (8th & 9th or more) will be at the double time rate of pay.

Overtime

Double time the regular rate after a 7 hour day.
Double time the regular time rate for Saturday.
Double time the regular rate for Sunday.

Overtime Holidays

Double time the regular rate for work on the following holiday(s).
New Year's Day
President's Day
Memorial Day
Independence Day
Labor Day
Thanksgiving Day
Day after Thanksgiving
Christmas Day

Paid Holidays

None

Shift Rates

Shifts shall be any 7 hours beyond 4:00 P.M. for which the glazier shall receive 8 hours pay for 7 hours worked.

(Local #1281)

GLAZIER - REPAIR & MAINTENANCE

(For the Installation of Glass - All repair and maintenance work on a particular building, whenever performed, where the total cumulative contract value is under $127,628. Except where enumerated (i.e. plate glass windows) does not apply to non-residential buildings.)

Craft Jurisdiction for repair, maintenance and fabrication

Plate glass replacement, Residential glass replacement, Residential mirrors and shower doors, Storm windows and storm doors, Residential replacement windows, Herculite door repairs, Door closer repairs, Retrofit apartment house (non commercial buildings), Glass tinting.

Effective Period: 7/1/2016 - 6/30/2017
Wage Rate per Hour: $23.78
Supplemental Benefit Rate per Hour: $20.14

Overtime

Time and one half the regular rate after an 8 hour day.
Double time the regular rate for Sunday.
Time and one half the regular hourly rate after 40 hours in any work week.

Paid Holidays

New Year's Day
President's Day

Memorial Day
Independence Day
Labor Day
Thanksgiving Day
Day after Thanksgiving
Christmas Day

(Local #1281)

HEAT AND FROST INSULATOR

Heat & Frost Insulator

Effective Period: 7/1/2016 - 6/30/2017
Wage Rate per Hour: $57.78
Supplemental Benefit Rate per Hour: $38.96

Overtime Description
Double time shall be paid for supplemental benefits during overtime work.
8th hour paid at time and one half.

Overtime
Double time the regular rate after an 8 hour day.
Double time the regular time rate for Saturday.
Double time the regular rate for Sunday.

Overtime Holidays
Double time the regular rate for work on the following holiday(s).
New Year's Day
Martin Luther King Jr. Day
President's Day
Memorial Day
Independence Day
Columbus Day
Veteran's Day
Thanksgiving Day
Day after Thanksgiving
Christmas Day

Triple time the regular rate for work on the following holiday(s).
Labor Day

Paid Holidays
None

Shift Rates

The first shift shall work seven hours at the regular straight time rate. The second and third shift shall work seven hours the regular straight time hourly rate plus a fourteen percent wage and benefit premium.
Off hour work in occupied or retail buildings may be worked on weekdays with an increment of $1.00 per hour and eight hours pay for seven (7) hours worked. Double time will apply for over seven (7) hours worked on weekdays, weekends or holidays.

(Local #12) (BCA)

HOUSE WRECKER
(TOTAL DEMOLITION)

House Wrecker - Tier A

On all work sites the first, second, eleventh and every third House Wrecker thereafter will be Tier A House Wreckers (i.e. 1st, 2nd, 11th, 14th etc). Other House Wreckers may be Tier B House Wreckers.

Effective Period: 7/1/2016 - 6/30/2017
Wage Rate per Hour: $36.33
Supplemental Benefit Rate per Hour: $27.77

House Wrecker - Tier B

Effective Period: 7/1/2016 - 6/30/2017
Wage Rate per Hour: $25.56
Supplemental Benefit Rate per Hour: $20.45

Overtime
Time and one half the regular rate after an 8 hour day.
Time and one half the regular rate for Saturday.
Double time the regular rate for Sunday.

Overtime Holidays
Double time the regular rate for work on the following holiday(s).
New Year's Day
President's Day
Memorial Day
Independence Day
Labor Day
Thanksgiving Day
Christmas Day

Paid Holidays
None

(Mason Tenders District Council)

IRON WORKER - ORNAMENTAL

Iron Worker - Ornamental

Effective Period: 7/1/2016 - 6/30/2017
Wage Rate per Hour: $43.75
Supplemental Benefit Rate per Hour: $49.57
Supplemental Note: Supplemental benefits are to be paid at the applicable overtime rate when overtime is in effect.

Overtime Description
Time and one half the regular rate after a 7 hour day for a maximum of two hours on any regular work day (the 8th and 9th hour) and double time shall be paid for all work on a regular work day thereafter, time and one half the regular rate for Saturday for the first seven hours of work and double time shall be paid for all work on a Saturday thereafter.

Overtime
Double time the regular rate for Sunday.

Overtime Holidays
Double time the regular rate for work on the following holiday(s).
New Year's Day
President's Day
Memorial Day
Independence Day
Labor Day
Thanksgiving Day
Christmas Day

Paid Holidays
None

Shift Rates
For off shift work - 8 hours pay for 7 hours of work. When two or three shifts are employed on a job, Monday through Friday, the workday for each shift shall be seven hours and paid for ten and one-half hours at the single time rate. When two or three shifts are worked on Saturday, Sunday or holidays, each shift shall be seven hours and paid fifteen and three-quarters hours.

(Local #580)

IRON WORKER - STRUCTURAL

Iron Worker - Structural

Effective Period: 7/1/2016 - 6/30/2017
Wage Rate per Hour: $49.50
Supplemental Benefit Rate per Hour: $69.74
Supplemental Note: Supplemental benefits are to be paid at the applicable overtime rate when overtime is in effect.

Overtime Description
Monday through Friday- the first eight hours are paid at straight time, the 9th and 10th hours are paid at time and one-half the regular rate, all additional weekday overtime is paid at double the regular rate. Saturdays- the first eight hours are paid at time and one-half the regular rate, double time thereafter. Sunday-all shifts are paid at double time.

Overtime
Time and one half the regular rate after an 8 hour day.
Time and one half the regular rate for Saturday.
Double time the regular rate for Sunday.

Overtime Holidays
Double time the regular rate for work on the following holiday(s).
New Year's Day
President's Day
Memorial Day
Independence Day
Labor Day
Thanksgiving Day
Christmas Day

Paid Holidays
1/2 day on Christmas Eve if work is performed in the A.M.
1/2 day on New Year's Eve if work is performed in the A.M.

Shift Rates
Monday through Friday - First Shift: First eight hours are paid at straight time, the 9th & 10th hours are paid at time and a half, double time paid thereafter. Second and third Shifts: First eight hours are paid at time and one-half, double time thereafter. Saturdays: All shifts, first eight hours paid at time and one-half, double time thereafter: Sunday all shifts are paid at double time.

(Local #40 & #361)

LABORER
(Foundation, Concrete, Excavating, Street Pipe Layer and Common)

Laborer

Excavation and foundation work for buildings, heavy construction, engineering work, and hazardous waste removal in connection with the above work. Landscaping tasks in connection with heavy construction work, engineering work and building projects. Projects include, but are not limited to pollution plants, sewers, parks, subways, bridges, highways, etc.

Effective Period: 7/1/2016 - 6/30/2017
Wage Rate per Hour: $41.00
Supplemental Benefit Rate per Hour: $38.63

Overtime
Time and one half the regular rate after an 8 hour day.
Time and one half the regular rate for Saturday.
Double time the regular rate for Sunday.

Overtime Holidays
Double time the regular rate for work on the following holiday(s).
New Year's Day
Memorial Day
Independence Day
Labor Day
Columbus Day
Thanksgiving Day
Christmas Day

Paid Holidays
Labor Day
Thanksgiving Day

Shift Rates
When two shifts are employed, single time rate shall be paid for each shift. When three shifts are found necessary, each shift shall work seven and one half hours (7 ½), but shall be paid for eight (8) hours of labor, and be permitted one half hour for lunch.

(Local #731)

LANDSCAPING
(Landscaping tasks, as well as tree pruning, tree removing, spraying and maintenance in connection with the planting of street trees and the planting of trees in city parks but not when such activities are performed as part of, or in connection with, other construction or reconstruction projects.)

Landscaper (Above 6 years experience)

Effective Period: 7/1/2016 - 6/30/2017
Wage Rate per Hour: $27.00
Supplemental Benefit Rate per Hour: $14.55

Landscaper (3 - 6 years experience)

Effective Period: 7/1/2016 - 6/30/2017
Wage Rate per Hour: $26.00
Supplemental Benefit Rate per Hour: $14.55

Landscaper (up to 3 years experience)

Effective Period: 7/1/2016 - 6/30/2017
Wage Rate per Hour: $23.50
Supplemental Benefit Rate per Hour: $14.55

Groundperson

Effective Period: 7/1/2016 - 6/30/2017
Wage Rate per Hour: $23.50
Supplemental Benefit Rate per Hour: $14.55

Tree Remover / Pruner

Effective Period: 7/1/2016 - 6/30/2017
Wage Rate per Hour: $32.00
Supplemental Benefit Rate per Hour: $14.55

Landscaper Sprayer (Pesticide Applicator)

Effective Period: 7/1/2016 - 6/30/2017
Wage Rate per Hour: $22.00
Supplemental Benefit Rate per Hour: $14.55

Watering - Plant Maintainer

Effective Period: 7/1/2016 - 6/30/2017
Wage Rate per Hour: $17.00
Supplemental Benefit Rate per Hour: $14.55

Overtime Description

For all overtime work performed, supplemental benefits shall include an additional seventy-five ($0.75) cents per hour.

Overtime

Time and one half the regular rate after an 8 hour day.

Time and one half the regular rate for Saturday.
Double time the regular rate for Sunday.
Time and one half the regular rate for work on a holiday plus the day's pay.

Paid Holidays

New Year's Day
Memorial Day
Independence Day
Labor Day
Thanksgiving Day
Christmas Day

Shift Rates

Work performed on a 4pm to 12am shift has a 15% differential. Work performed on a 12am to 8am shift has a 20% differential.

(Local #175)

MARBLE MECHANIC

Marble Setter

Effective Period: 7/1/2016 - 12/31/2016
Wage Rate per Hour: $52.32
Supplemental Benefit Rate per Hour: $37.64

Effective Period: 1/1/2017 - 6/30/2017
Wage Rate per Hour: $52.74
Supplemental Benefit Rate per Hour: $38.67

Marble Finisher

Effective Period: 7/1/2016 - 12/31/2016
Wage Rate per Hour: $41.11
Supplemental Benefit Rate per Hour: $35.91

Effective Period: 1/1/2017 - 6/30/2017
Wage Rate per Hour: $41.46
Supplemental Benefit Rate per Hour: $36.64

Marble Polisher

Effective Period: 7/1/2016 - 12/31/2016
Wage Rate per Hour: $37.49
Supplemental Benefit Rate per Hour: $27.80

Effective Period: 1/1/2017 - 6/30/2017
Wage Rate per Hour: $37.93
Supplemental Benefit Rate per Hour: $28.33

Overtime Description

Supplemental Benefit contributions are to be made at the applicable overtime rates. Time and one half the regular rate after a 7 hour day or time and one half the regular rate after an 8 hour day - chosen by Employer at the start of the project and then would last for the full duration of the project.

Overtime

Time and one half the regular rate for Saturday.
Double time the regular rate for Sunday.

Overtime Holidays

Double time the regular rate for work on the following holiday(s).
New Year's Day
President's Day
Good Friday
Memorial Day
Independence Day
Labor Day
Columbus Day
Veteran's Day
Thanksgiving Day
Day after Thanksgiving
Christmas Day

Paid Holidays

None

(Local #7)

MASON TENDER

Mason Tender

Effective Period: 7/1/2016 - 6/30/2017
Wage Rate per Hour: $37.55
Supplemental Benefit Rate per Hour: $29.04

Overtime

Time and one half the regular rate after an 8 hour day.
Time and one half the regular rate for Saturday.
Double time the regular rate for Sunday.

Saturday may be used as a make-up day at straight time when a day is lost during that week to inclement weather.

Overtime Holidays

Double time the regular rate for work on the following holiday(s).
New Year's Day
President's Day
Memorial Day
Independence Day
Labor Day
Thanksgiving Day
Christmas Day

Paid Holidays

None

Shift Rates

The Employer may work two (2) shifts with the first shift at the straight time wage rate and the second shift receiving eight (8) hours paid for seven (7) hours work at the straight time wage rate.

(Local #79)

MASON TENDER (INTERIOR DEMOLITION WORKER)

(The erection, building, moving, servicing and dismantling of enclosures, scaffolding, barricades, protection and site safety structures etc., on Interior Demolition jobs.)

Mason Tender Tier A

Effective Period: 7/1/2016 - 6/30/2017
Wage Rate per Hour: $36.19
Supplemental Benefit Rate per Hour: $22.95

Mason Tender Tier B

On Interior Demolition job sites 33 1/3 % of the employees shall be classified as Tier A Interior Demolition Workers and 66 2/3 % shall be classified as Tier B Interior Demolition Workers; provided that the employer may employ more than 33 1/3 % Tier A Interior Demolition Workers on the job site. Where the number of employees on a job site is not divisible by 3, the first additional employee (above the number of employees divisible by three) shall be a Tier B Interior Demolition Worker, and the second additional employee shall be a Tier A Interior Demolition Worker.

Effective Period: 7/1/2016 - 6/30/2017
Wage Rate per Hour: $25.38

Supplemental Benefit Rate per Hour: $17.27

Overtime
Time and one half the regular rate after an 8 hour day.
Time and one half the regular rate for Sunday.

Overtime Holidays
Double time the regular rate for work on the following holiday(s).
New Year's Day
President's Day
Memorial Day
Independence Day
Labor Day
Thanksgiving Day
Christmas Day

Paid Holidays
None

(Local #79)

METALLIC LATHER

Metallic Lather

Effective Period: 7/1/2016 - 6/30/2017
Wage Rate per Hour: $44.53
Supplemental Benefit Rate per Hour: $42.67
Supplemental Note: Supplemental benefits for overtime are paid at the appropriate overtime rate.

Overtime Description
Overtime would be time and one half the regular rate after a seven (7) or eight (8) hours workday, which would be set at the start of the job.

Overtime
Time and one half the regular rate for Saturday.
Double time the regular rate for Sunday.

Overtime Holidays
Double time the regular rate for work on the following holiday(s).
New Year's Day
Washington's Birthday
Memorial Day
Independence Day
Labor Day
Columbus Day

Thanksgiving Day
Christmas Day

Paid Holidays

1/2 day on Christmas Eve if work is performed in the A.M.
1/2 day on New Year's Eve if work is performed in the A.M.

Shift Rates

There will be no shift differential paid on the first shift if more than one shift is employed. The shift differential will remain $12/hour on the second and third shift for the first eight (8) hours if worked. There will be no pyramiding on overtime worked on second and third shifts. The time and one half (1.5x) rate will be against the base wage rate, not the shift differential

(Local #46)

MILLWRIGHT

Millwright

Effective Period: 7/1/2016 - 6/30/2017
Wage Rate per Hour: $51.50
Supplemental Benefit Rate per Hour: $52.41

Overtime

Time and one half the regular rate after an 8 hour day.
Time and one half the regular rate for Saturday.
Double time the regular rate for Sunday.
Saturday may be used as a make-up day at straight time when a day is lost during that week to inclement weather.

Overtime Holidays

Double time the regular rate for work on the following holiday(s).
New Year's Day
President's Day
Good Friday
Memorial Day
Independence Day
Labor Day
Columbus Day
Presidential Election Day
Thanksgiving Day
Christmas Day

Paid Holidays

1/2 day on Christmas Eve if work is performed in the A.M.
1/2 day on New Year's Eve if work is performed in the A.M.

Shift Rates

The first shift shall receive the straight time rate of pay. The second shift receives the straight time rate of pay plus fifteen (15%) per cent. Members of the second shift shall be allowed one half hour to eat, with this time being included in the hours of the workday established. There must be a first shift to work a second shift. All additional hours worked shall be paid at the time and one-half rate of pay plus fifteen (15%) per cent for weekday hours.

(Local #740)

MOSAIC MECHANIC

Mosaic Mechanic - Mosaic & Terrazzo Mechanic

Effective Period: 7/1/2016 - 6/30/2017
Wage Rate per Hour: $46.52
Supplemental Benefit Rate per Hour: $39.84
Supplemental Note: Supplemental benefits for overtime to be paid at the rate of $50.86 per hour.

Mosaic Mechanic - Mosaic & Terrazzo Finisher

Effective Period: 7/1/2016 - 6/30/2017
Wage Rate per Hour: $44.91
Supplemental Benefit Rate per Hour: $39.83
Supplemental Note: Supplemental benefits for overtime to be paid at the rate of $50.85 per hour.

Mosaic Mechanic - Machine Operator Grinder

Effective Period: 7/1/2016 - 6/30/2017
Wage Rate per Hour: $44.91
Supplemental Benefit Rate per Hour: $39.83
Supplemental Note: Supplemental benefits for overtime to be paid at the rate of $50.85 per hour.

Overtime

Time and one half the regular rate after a 7 hour day.
Time and one half the regular rate for Saturday.
Double time the regular rate for Sunday.

Overtime Holidays

Double time the regular rate for work on the following holiday(s).
New Year's Day
Washington's Birthday
Good Friday
Independence Day
Labor Day
Columbus Day

Veteran's Day
Thanksgiving Day
Day after Thanksgiving
Christmas Day

Paid Holidays
None

(Local #7)

PAINTER

Painter - Brush & Roller

Effective Period: 7/1/2016 - 4/30/2017
Wage Rate per Hour: $42.50
Supplemental Benefit Rate per Hour: $26.62
Supplemental Note: $31.25 on overtime

Effective Period: 5/1/2017 - 6/30/2017
Wage Rate per Hour: $44.10
Supplemental Benefit Rate per Hour: $27.02
Supplemental Note: $ 31.65 on overtime

Spray & Scaffold / Decorative / Sandblast

Effective Period: 7/1/2016 - 4/30/2017
Wage Rate per Hour: $45.50
Supplemental Benefit Rate per Hour: $26.62
Supplemental Note: $ 31.25 on overtime

Effective Period: 5/1/2017 - 6/30/2017
Wage Rate per Hour: $47.10
Supplemental Benefit Rate per Hour: $27.02
Supplemental Note: $ 31.65 on overtime

Overtime
Time and one half the regular rate after a 7 hour day.
Time and one half the regular rate for Saturday.
Time and one half the regular rate for Sunday.

Overtime Holidays
Time and one half the regular rate for work on the following holiday(s).
New Year's Day
President's Day
Memorial Day

Independence Day
Labor Day
Columbus Day
Thanksgiving Day
Christmas Day

Paid Holidays
None

(District Council of Painters #9)

PAINTER - METAL POLISHER

METAL POLISHER

Effective Period: 7/1/2016 - 6/30/2017
Wage Rate per Hour: $28.88
Supplemental Benefit Rate per Hour: $6.96

METAL POLISHER - NEW CONSTRUCTION

Effective Period: 7/1/2016 - 6/30/2017
Wage Rate per Hour: $29.83
Supplemental Benefit Rate per Hour: $6.96

METAL POLISHER - SCAFFOLD OVER 34 FEET

Effective Period: 7/1/2016 - 6/30/2017
Wage Rate per Hour: $32.38
Supplemental Benefit Rate per Hour: $6.96

Overtime Description
All work performed on Saturdays shall be paid at time-in-a half. The exception being; for suspended scaffold work and work deemed as a construction project; an eight (8) hour shift lost during the week due to circumstances beyond the control of the employer, up to amaximumof eight (8) hours per week, may be worked on Saturday at the straight time rate.

Overtime
Time and one half the regular rate after an 8 hour day.
Time and one half the regular rate for Saturday.
Double time the regular rate for Sunday.
Saturday may be used as a make-up day at straight time when a day is lost during that week to inclement weather.
Triple time the regular rate for work on the following holiday(s).

Paid Holidays

New Year's Day
Martin Luther King Jr. Day
President's Day
Memorial Day
Independence Day
Labor Day
Columbus Day
Veteran's Day
Thanksgiving Day
Day after Thanksgiving
Christmas Day

Shift Rates

Four Days a week at Ten (10) hours straight a day.

Local 8A-28A

PAINTER - STRIPER

Striper (paint)

Effective Period: 7/1/2016 - 6/30/2017
Wage Rate per Hour: $35.00
Supplemental Benefit Rate per Hour: $12.32
Supplemental Note: Overtime Supplemental Benefit rate - $8.02; New Hire Rate (0-3 months) - $0.00

Lineperson (thermoplastic)

Effective Period: 7/1/2016 - 6/30/2017
Wage Rate per Hour: $39.00
Supplemental Benefit Rate per Hour: $12.32
Supplemental Note: Overtime Supplemental Benefit rate - $8.02; New Hire Rate (0-3 months) - $0.00

Overtime

Time and one half the regular rate after an 8 hour day.
Time and one half the regular rate for Saturday.
Double time the regular rate for Sunday.
Time and one half the regular rate for work on the following holiday(s).

Paid Holidays

New Year's Day
Good Friday
Memorial Day
Independence Day
Labor Day

Columbus Day
Presidential Election Day
Thanksgiving Day
Day after Thanksgiving
Christmas Day

Shift Rates

Employees hired before April 1, 2003: 15% night shift premium differential for work commenced at 9:00 PM or later.

Vacation

Employees with one to two years service shall accrue vacation based on hours worked: 250 hours worked - 1 day vacation; 500 hours worked - 2 days vacation; 750 hours worked - 3 days vacation; 900 hours worked - 4 days vacation; 1,000 hours worked - 5 days vacation. Employees with two to five years service receive two weeks vacation. Employees with five to twenty years service receive three weeks vacation. Employees with twenty to twenty-five years service receive four weeks vacation. Employees with 25 or more years service receive five weeks vacation. Vacation must be taken during winter months. 2 Personal Days except employees hired after 4/1/12 who do not have 2 years of service.

(Local #917)

PAINTER - STRUCTURAL STEEL

Painters on Structural Steel

Effective Period: 7/1/2016 - 6/30/2017
Wage Rate per Hour: $49.00
Supplemental Benefit Rate per Hour: $36.08

Painter - Power Tool

Effective Period: 7/1/2016 - 6/30/2017
Wage Rate per Hour: $55.00
Supplemental Benefit Rate per Hour: $36.08

Overtime Description

Supplemental Benefits shall be paid for each hour worked, up to forty (40) hours per week for the period of May 1st to November 15th or up to fifty (50) hours per week for the period of November 16th to April 30th.

Overtime

Time and one half the regular rate after a 7 hour day.
Time and one half the regular rate for Saturday.
Time and one half the regular rate for Sunday.

Overtime Holidays

Double time the regular rate for work on the following holiday(s).
New Year's Day

Memorial Day
Independence Day
Labor Day
Thanksgiving Day
Christmas Day

Paid Holidays
None

Shift Rates
Regular hourly rates plus a ten per cent (10%) differential

(Local #806)

PAPERHANGER

Paperhanger

Effective Period: 7/1/2016 - 6/30/2017
Wage Rate per Hour: $43.58
Supplemental Benefit Rate per Hour: $30.73
Supplemental Note: Supplemental benefits are to be paid at the appropriate straight time and overtime rate.

Overtime
Time and one half the regular rate after a 7 hour day.
Time and one half the regular rate for Saturday.
Time and one half the regular rate for Sunday.

Overtime Holidays
Time and one half the regular rate for work on the following holiday(s).
New Year's Day
President's Day
Memorial Day
Independence Day
Labor Day
Thanksgiving Day
Day after Thanksgiving
Christmas Day

Paid Holidays
None

Shift Rates
Evening shift - 4:30 P.M. to 12:00 Midnight (regular rate of pay); any work performed before 7:00 A.M. shall be at time and one half the regular base rate of pay.

(District Council of Painters #9)

PAVER AND ROADBUILDER

Paver & Roadbuilder - Formsetter

Effective Period: 7/1/2016 - 6/30/2017
Wage Rate per Hour: $45.35
Supplemental Benefit Rate per Hour: $38.95

Paver & Roadbuilder - Laborer

Paving and road construction work, regardless of material used, including but not limited to preparation of job sites, removal of old surfaces, asphalt and/or concrete, by whatever method, including but not limited to milling; laying of concrete; laying of asphalt for temporary, patchwork, and utility paving (but not production paving); site preparation and incidental work before the installation of rubberized materials and similar surfaces; installation and repair of temporary construction fencing; slurry seal coating, maintenance of safety surfaces; play equipment installation, and other related work.

Effective Period: 7/1/2016 - 6/30/2017
Wage Rate per Hour: $41.48
Supplemental Benefit Rate per Hour: $38.95

Production Paver & Roadbuilder - Screed Person

(Production paving is asphalt paving when using a paving machine or on a project where a paving machine is traditionally used)

Adjustment of paving machinery on production paving jobs.

Effective Period: 7/1/2016 - 6/30/2017
Wage Rate per Hour: $45.95
Supplemental Benefit Rate per Hour: $38.95

Production Paver & Roadbuilder - Raker

Effective Period: 7/1/2016 - 6/30/2017
Wage Rate per Hour: $45.35
Supplemental Benefit Rate per Hour: $38.95

Production Paver & Roadbuilder - Shoveler

General laborer (except removal of surfaces - see Paver and Roadbuilder-Laborer) including but not limited to tamper, AC paint and liquid tar work.

Effective Period: 7/1/2016 - 6/30/2017

Wage Rate per Hour: $42.06
Supplemental Benefit Rate per Hour: $38.95

Overtime Description
If an employee works New Year's Day or Christmas Day, they receive the single time rate plus 25%.

Overtime
Time and one half the regular rate after an 8 hour day.
Time and one half the regular rate for Saturday.
Double time the regular rate for Sunday.

Overtime Holidays
Double time the regular rate for work on the following holiday(s).
Memorial Day
Independence Day
Labor Day
Columbus Day
Thanksgiving Day

Shift Rates
When two shifts are employed, the work period for each shift shall be a continuous eight (8) hours. When three shifts are employed, each shift will work seven and one half (7 ½) hours but will be paid for eight (8) hours since only one half (1/2) hour is allowed for meal time.
When two or more shifts are employed, single time will be paid for each shift.

Night Work - On night work, the first eight (8) hours of work will be paid for at the single time rate, except that production paving work shall be paid at 10% over the single time rate for the screed person, rakers and shovelers directly involved only. This differential is to be paid when there is only one shift and the shift works at night. All other workers will be exempt. Hours worked over eight (8) hours during said shift shall be paid for at the time and one-half rate.

(Local #1010)

PLASTERER

Plasterer

Effective Period: 7/1/2016 - 6/30/2017
Wage Rate per Hour: $43.93
Supplemental Benefit Rate per Hour: $28.10

Overtime
Time and one half the regular rate after a 7 hour day.
Time and one half the regular rate for Saturday.
Double time the regular rate for Sunday.

Saturday may be used as a make-up day at straight time when a day is lost during that week to inclement weather.

Overtime Holidays

Double time the regular rate for work on the following holiday(s).
New Year's Day
Martin Luther King Jr. Day
President's Day
Good Friday
Memorial Day
Independence Day
Labor Day
Columbus Day
Presidential Election Day
Thanksgiving Day
Christmas Day

Paid Holidays

None

Shift Rates

When it is not possible to conduct alteration work during regular work hours, in a building occupied by tenants, said work shall proceed on a shift basis: however work over seven (7) hours in any twenty four (24) hour period, the time after seven (7) hours shall be considered overtime.
The second shift shall start at a time between 3:30 p.m. and 7:00 p.m. and shall consist of seven (7) working hours and shall receive eight (8) hours of wages and benefits at the straight time rate. The workers on the second shift shall be allowed one-half (½) hour to eat with this time being included in the seven (7) hours of work.

(Local #262)

PLASTERER - TENDER

Plasterer - Tender

Effective Period: 7/1/2016 - 6/30/2017
Wage Rate per Hour: $37.55
Supplemental Benefit Rate per Hour: $29.04

Overtime

Time and one half the regular rate after an 8 hour day.
Time and one half the regular rate for Saturday.
Double time the regular rate for Sunday.
Saturday may be used as a make-up day at straight time when a day is lost during that week to inclement weather.

Overtime Holidays

Double time the regular rate for work on the following holiday(s).
New Year's Day
Washington's Birthday
Memorial Day
Independence Day
Labor Day
Presidential Election Day
Thanksgiving Day
Christmas Day

Paid Holidays

None

Shift Rates

When work commences outside regular work hours, workers receive an hour additional (differential) wage and supplement payment. Eight hours pay for seven hours work or nine hours pay for eight hours work.

(Mason Tenders District Council)

PLUMBER

Plumber

Effective Period: 7/1/2016 - 6/30/2017
Wage Rate per Hour: $65.67
Supplemental Benefit Rate per Hour: $29.28
Supplemental Note: Overtime supplemental benefit rate per hour: $58.28

Plumber - Temporary Services

Temporary Services - When there are no Plumbers on the job site, there may be three shifts designed to cover the entire twenty-four hour period, including weekends if necessary, at the following rate straight time.

Effective Period: 7/1/2016 - 6/30/2017
Wage Rate per Hour: $52.56
Supplemental Benefit Rate per Hour: $23.40

Overtime Description

Double time the regular rate after a 7 hour day - unless for new construction site work where the plumbing contract price is $1.5 million or less, the hours of labor can be 8 hours per day at the employers option. On Alteration jobs when other mechanical trades at the site are working an eighth hour at straight time, then the plumber shall also work an eighth hour at straight time.

Overtime

Double time the regular time rate for Saturday.
Double time the regular rate for Sunday.

Overtime Holidays

Double time the regular rate for work on the following holiday(s).
New Year's Day
President's Day
Memorial Day
Independence Day
Labor Day
Columbus Day
Veteran's Day
Thanksgiving Day
Day after Thanksgiving
Christmas Day

Shift Rates

Shift work, when directly specified in public agency or authority documents where plumbing contract is $8 million or less, will be permitted. 30% shift premium shall be paid for wages and fringe benefits for 4:00 pm and midnight shifts Monday to Friday. 50% shift premium shall be paid for wages and fringe benefits for 4:00 pm and midnight shift work performed on weekends. For shift work on holidays, double time wages and fringe benefits shall be paid.

(Plumbers Local #1)

PLUMBER (MECHNICAL EQUIPMENT AND SERVICE)

(Mechanical Equipment and Service work shall include any repair and/or replacement of the present plumbing system.)

Plumber

Effective Period: 7/1/2016 - 6/30/2017
Wage Rate per Hour: $39.42
Supplemental Benefit Rate per Hour: $14.19

Overtime

Time and one half the regular rate after an 8 hour day.
Time and one half the regular rate for Saturday.
Time and one half the regular rate for Sunday.

Overtime Holidays

Time and one half the regular rate for work on the following holiday(s).
New Year's Day
President's Day
Memorial Day
Independence Day
Thanksgiving Day

Day after Thanksgiving
Christmas Day

Paid Holidays
None

(Plumbers Local # 1)

PLUMBER (RESIDENTIAL RATES FOR 1, 2 AND 3 FAMILY HOME CONSTRUCTION)

Effective Period: 7/1/2016 - 6/30/2017
Wage Rate per Hour: $45.47
Supplemental Benefit Rate per Hour: $21.26

Overtime
Double time the regular rate after an 8 hour day.
Double time the regular time rate for Saturday.
Double time the regular rate for Sunday.

Overtime Holidays
Double time the regular rate for work on the following holiday(s).
New Year's Day
President's Day
Memorial Day
Independence Day
Labor Day
Columbus Day
Veteran's Day
Thanksgiving Day
Day after Thanksgiving
Christmas Day

Paid Holidays
None

Shift Rates
30% shift premium shall be paid for wages and fringe benefits for 4:00 pm and midnight shifts Monday to Friday. 50% shift premium shall be paid for wages and fringe benefits for 4:00 pm and midnight shift work performed on weekends. For shift work on holidays, double time wages and fringe benefits shall be paid.

(Plumbers Local #1)

PLUMBER: PUMP & TANK
Oil Trades (Installation and Maintenance)

Plumber - Pump & Tank

Effective Period: 7/1/2016 - 6/30/2017
Wage Rate per Hour: $63.52
Supplemental Benefit Rate per Hour: $22.91

Overtime
Time and one half the regular rate after an 8 hour day.
Time and one half the regular rate for Saturday.
Time and one half the regular rate for Sunday.

Overtime Holidays
Time and one half the regular rate for work on the following holiday(s).
New Year's Day
President's Day
Memorial Day
Independence Day
Labor Day
Columbus Day
Veteran's Day
Thanksgiving Day
Day after Thanksgiving
Christmas Day

Paid Holidays
None

Shift Rates
All work outside the regular workday (8:00 A.M. to 3:30 P.M.) is to be paid at time and one half the regular hourly rate

(Plumbers Local #1)

POINTER, WATERPROOFER, CAULKER, SANDBLASTER, STEAMBLASTER
(Exterior Building Renovation)

Journeyperson

Effective Period: 7/1/2016 - 6/30/2017
Wage Rate per Hour: $50.04
Supplemental Benefit Rate per Hour: $26.15

Overtime

Time and one half the regular rate after an 8 hour day.
Time and one half the regular rate for Saturday.
Time and one half the regular rate for Sunday.
Saturday may be used as a make-up day at straight time when a day is lost during that week to inclement weather.

Overtime Holidays

Time and one half the regular rate for work on the following holiday(s).
New Year's Day
Martin Luther King Jr. Day
President's Day
Memorial Day
Independence Day
Labor Day
Thanksgiving Day
Christmas Day

Paid Holidays

None

Shift Rates

All work outside the regular work day (an eight hour workday between the hours of 6:00 A.M. and 4:30 P.M.) is to be paid at time and one half the regular rate.

(Bricklayer District Council)

ROOFER

Roofer

Effective Period: 7/1/2016 - 6/30/2017
Wage Rate per Hour: $40.70
Supplemental Benefit Rate per Hour: $30.17

Overtime

Time and one half the regular rate after an 8 hour day.
Time and one half the regular rate for Saturday.
Time and one half the regular rate for Sunday.

Overtime Holidays

Time and one half the regular rate for work on the following holiday(s).
New Year's Day
President's Day
Memorial Day
Independence Day
Labor Day
Presidential Election Day
Thanksgiving Day
Christmas Day

Paid Holidays
None

Shift Rates
Second shift - Regular hourly rate plus a 10% differential. Third shift - Regular hourly rate plus a 15% differential.

(Local #8)

SHEET METAL WORKER

Sheet Metal Worker

Effective Period: 7/1/2016 - 6/30/2017
Wage Rate per Hour: $47.70
Supplemental Benefit Rate per Hour: $46.45
Supplemental Note: Supplemental benefit contributions are to be made at the applicable overtime rates.

Sheet Metal Worker - Fan Maintenance

(The temporary operation of fans or blowers in new or existing buildings for heating and/or ventilation, and/or air conditioning prior to the completion of the project.)

Effective Period: 7/1/2016 - 6/30/2017
Wage Rate per Hour: $38.16
Supplemental Benefit Rate per Hour: $46.45

Sheet Metal Worker - Duct Cleaner

Effective Period: 7/1/2016 - 6/30/2017
Wage Rate per Hour: $12.90
Supplemental Benefit Rate per Hour: $8.07

Overtime
Time and one half the regular rate after an 8 hour day.
Time and one half the regular rate for Saturday.
Double time the regular rate for Sunday.

Overtime Holidays

Double time the regular rate for work on the following holiday(s).
New Year's Day
Martin Luther King Jr. Day
President's Day
Memorial Day
Independence Day
Labor Day
Columbus Day
Veteran's Day
Thanksgiving Day
Day after Thanksgiving
Christmas Day

Paid Holidays

None

Shift Rates

Work that can only be performed outside regular working hours (eight hours of work between 7:30 A.M. and 3:30 P.M.) - First shift (work between 3:30 P.M. and 11:30 P.M.) - 10% differential above the established hourly rate. Second shift (work between 11:30 P.M. and 7:30 A.M.) - 15% differential above the established hourly rate.

For Fan Maintenance: On all full shifts of fan maintenance work the straight time hourly rate of pay will be paid for each shift, including nights, Saturdays, Sundays, and holidays.

(Local #28)

SHEET METAL WORKER - SPECIALTY
(Decking & Siding)

Sheet Metal Specialty Worker

The first worker to perform this work must be paid at the rate of the Sheet Metal Worker. The second and third workers shall be paid the Specialty Worker Rate. The ratio of One Sheet Metal Worker, then Two Specialty Workers shall be utilized thereafter.

Effective Period: 7/1/2016 - 6/30/2017
Wage Rate per Hour: $43.25
Supplemental Benefit Rate per Hour: $24.41
Supplemental Note: Supplemental benefit contributions are to be made at the applicable overtime rates.

Overtime

Time and one half the regular rate after an 8 hour day.
Time and one half the regular rate for Saturday.
Double time the regular rate for Sunday.

Overtime Holidays

Double time the regular rate for work on the following holiday(s).
New Year's Day
Martin Luther King Jr. Day
President's Day
Memorial Day
Independence Day
Labor Day
Columbus Day
Veteran's Day
Thanksgiving Day
Christmas Day

Paid Holidays

None

(Local #28)

SHIPYARD WORKER

Shipyard Mechanic - First Class

Effective Period: 7/1/2016 - 6/30/2017
Wage Rate per Hour: $28.33
Supplemental Benefit Rate per Hour: $3.04

Shipyard Mechanic - Second Class

Effective Period: 7/1/2016 - 6/30/2017
Wage Rate per Hour: $22.18
Supplemental Benefit Rate per Hour: $2.80

Shipyard Laborer - First Class

Effective Period: 7/1/2016 - 6/30/2017
Wage Rate per Hour: $20.45
Supplemental Benefit Rate per Hour: $2.74

Shipyard Laborer - Second Class

Effective Period: 7/1/2016 - 6/30/2017
Wage Rate per Hour: $14.36
Supplemental Benefit Rate per Hour: $2.50

Shipyard Dockhand - First Class

Effective Period: 7/1/2016 - 6/30/2017
Wage Rate per Hour: $22.70
Supplemental Benefit Rate per Hour: $2.82

Shipyard Dockhand - Second Class

Effective Period: 7/1/2016 - 6/30/2017
Wage Rate per Hour: $16.01
Supplemental Benefit Rate per Hour: $2.57

Overtime Description

Work performed on holiday is paid double time the regular hourly wage rate plus holiday pay.

Overtime

Time and one half the regular rate after an 8 hour day.
Time and one half the regular rate for Saturday.
Double time the regular rate for Sunday.
Time and one half the regular hourly rate after 40 hours in any work week.

Paid Holidays

New Year's Day
Martin Luther King Jr. Day
President's Day
Good Friday
Memorial Day
Independence Day
Labor Day
Thanksgiving Day
Day after Thanksgiving
Christmas Day

Based on Survey Data

SIGN ERECTOR
(Sheet Metal, Plastic, Electric, and Neon)

Sign Erector

Effective Period: 7/1/2016 - 6/30/2017
Wage Rate per Hour: $46.85
Supplemental Benefit Rate per Hour: $48.57

Overtime

Time and one half the regular rate after a 7 hour day.
Time and one half the regular rate for Saturday.
Time and one half the regular rate for Sunday.
Time and one half the regular rate for work on the following holiday(s).

Paid Holidays

New Year's Day
Washington's Birthday
Memorial Day
Independence Day
Labor Day
Columbus Day
Election Day
Thanksgiving Day
Day after Thanksgiving
Christmas Day

Shift Rates

Time and one half the regular hourly rate is to be paid for all hours worked outside the regular workday either (7:00 A.M. through 2:30 P.M.) or (8:00 A.M. through 3:30 P.M.)

(Local #137)

STEAMFITTER

Steamfitter I

Effective Period: 7/1/2016 - 6/30/2017
Wage Rate per Hour: $55.50
Supplemental Benefit Rate per Hour: $54.29
Supplemental Note: Overtime supplemental benefit rate: $107.84

Steamfitter -Temporary Services

The steamfitters shall not do any other work and shall not be permitted to work more than one shift in a twenty-four hour day. When steamfitters are present during the regular working day, no temporary services steamfitter will be required

Effective Period: 7/1/2016 - 6/30/2017
Wage Rate per Hour: $42.18
Supplemental Benefit Rate per Hour: $44.08

Overtime

Double time the regular rate after a 7 hour day.
Double time the regular time rate for Saturday.

Double time the regular rate for Sunday.

Overtime Holidays

Double time the regular rate for work on the following holiday(s).
New Year's Day
President's Day
Memorial Day
Independence Day
Labor Day
Columbus Day
Veteran's Day
Thanksgiving Day
Day after Thanksgiving
Christmas Day

Paid Holidays

None

Shift Rates

Work performed between 3:30 P.M. and 7:00 A.M. and on Saturdays, Sundays and Holidays shall be at double time the regular hourly rate and paid at the overtime supplemental benefit rate above.

Steamfitter II

For heating, ventilation, air conditioning and mechanical public works contracts with a dollar value not to exceed $15,000,000 and for fire protection/sprinkler public works contracts not to exceed $1,500,000.

Effective Period: 7/1/2016 - 6/30/2017
Wage Rate per Hour: $55.50
Supplemental Benefit Rate per Hour: $54.29
Supplemental Note: Overtime supplemental benefit rate: $107.84

Steamfitter -Temporary Services

The steamfitters shall not do any other work and shall not be permitted to work more than one shift in a twenty-four hour day. When steamfitters are present during the regular working day, no temporary services steamfitter will be required.

Effective Period: 7/1/2016 - 6/30/2017
Wage Rate per Hour: $42.18
Supplemental Benefit Rate per Hour: $44.08

Overtime

Double time the regular rate after an 8 hour day.
Double time the regular time rate for Saturday.
Double time the regular rate for Sunday.

Overtime Holidays

Double time the regular rate for work on the following holiday(s).
New Year's Day
President's Day
Memorial Day
Independence Day
Labor Day
Columbus Day
Veteran's Day
Thanksgiving Day
Day after Thanksgiving
Christmas Day

Paid Holidays

None

Shift Rates

May be performed outside of the regular workday except Saturday, Sunday and Holidays. A shift shall consist of eight working hours. All work performed in excess of eight hours shall be paid at double time. No shift shall commence after 7:00 P.M. on Friday or 7:00 P.M. the day before holidays. All work performed after 12:01 A.M. Saturday or 12:01 A.M. the day before a Holiday will be paid at double time. When shift work is performed the wage rate for regular time worked is a thirty percent premium together with fringe benefits.

On Transit Authority projects, where work is performed in the vicinity of tracks all shift work on weekends and holidays may be performed at the regular shift rates.

Local #638

STEAMFITTER - REFRIGERATION AND AIR CONDITIONER
(Maintenance and Installation Service Person)

Refrigeration and Air Conditioner Mechanic

Effective Period: 7/1/2016 - 6/30/2017
Wage Rate per Hour: $39.50
Supplemental Benefit Rate per Hour: $15.06

Refrigeration and Air Conditioner Service Person V

Effective Period: 7/1/2016 - 6/30/2017
Wage Rate per Hour: $32.46
Supplemental Benefit Rate per Hour: $13.53

Refrigeration and Air Conditioner Service Person IV

Effective Period: 7/1/2016 - 6/30/2017

Wage Rate per Hour: $26.89
Supplemental Benefit Rate per Hour: $12.26

Refrigeration and Air Conditioner Service Person III

Filter changing and maintenance thereof, oil and greasing, tower and coil cleaning, scraping and painting, general housekeeping, taking of water samples.

Effective Period: 7/1/2016 - 6/30/2017
Wage Rate per Hour: $23.08
Supplemental Benefit Rate per Hour: $11.31

Refrigeration and Air Conditioner Service Person II

Filter changing and maintenance thereof, oil and greasing, tower and coil cleaning, scraping and painting, general housekeeping, taking of water samples.

Effective Period: 7/1/2016 - 6/30/2017
Wage Rate per Hour: $19.14
Supplemental Benefit Rate per Hour: $10.43

Refrigeration and Air Conditioner Service Person I

Filter changing and maintenance thereof, oil and greasing, tower and coil cleaning, scraping and painting, general housekeeping, taking of water samples.

Effective Period: 7/1/2016 - 6/30/2017
Wage Rate per Hour: $14.00
Supplemental Benefit Rate per Hour: $9.46

Overtime

Time and one half the regular rate after an 8 hour day.
Time and one half the regular rate for Saturday.
Double time the regular rate for Sunday.

Overtime Holidays

Double time the regular rate for work on the following holiday(s).
New Year's Day
Independence Day
Labor Day
Veteran's Day
Thanksgiving Day
Christmas Day

Double time and one half the regular rate for work on the following holiday(s).
Martin Luther King Jr. Day
President's Day
Memorial Day
Columbus Day

Paid Holidays

New Year's Day
Martin Luther King Jr. Day
President's Day
Memorial Day
Independence Day
Labor Day
Columbus Day
Veteran's Day
Thanksgiving Day
Christmas Day

(Local #638B)

STONE MASON - SETTER

Stone Mason - Setters

Effective Period: 7/1/2016 - 6/30/2017
Wage Rate per Hour: $51.08
Supplemental Benefit Rate per Hour: $38.10

Overtime
Time and one half the regular rate after a 7 hour day.
Time and one half the regular rate for Saturday.
Double time the regular rate for Sunday.

Overtime Holidays
Double time the regular rate for work on the following holiday(s).
New Year's Day
Washington's Birthday
Good Friday
Memorial Day
Independence Day
Labor Day
Thanksgiving Day
Christmas Day

Paid Holidays
1/2 day on Christmas Eve if work is performed in the A.M.

Shift Rates
For all work outside the regular workday (8:00 A.M. to 3:30 P.M. Monday through Friday), the pay shall be straight time plus a ten percent (10%) differential.

(Bricklayers District Council)

TAPER

Drywall Taper

Effective Period: 7/1/2016 - 12/27/2016
Wage Rate per Hour: $47.32
Supplemental Benefit Rate per Hour: $22.68

Effective Period: 12/28/2016 - 6/30/2017
Wage Rate per Hour: $47.82
Supplemental Benefit Rate per Hour: $22.68

Overtime
Time and one half the regular rate after a 7 hour day.
Time and one half the regular rate for Saturday.
Time and one half the regular rate for Sunday.

Overtime Holidays
Time and one half the regular rate for work on the following holiday(s).
New Year's Day
Martin Luther King Jr. Day
President's Day
Good Friday
Memorial Day
Independence Day
Labor Day
Columbus Day
Thanksgiving Day
Christmas Day

Paid Holidays
Any worker who reports to work on Christmas Eve or New Year's Eve pursuant to his employer's instruction shall be entitled to three (3) hours afternoon pay without working.

Shift Rates
Time and one half the regular rate outside the regular work hours (8:00 A.M. through 3:30 P.M.)

(Local #1974)

TELECOMMUNICATION WORKER
(Voice Installation Only)

Telecommunication Worker

Effective Period: 7/1/2016 - 6/30/2017
Wage Rate per Hour: $40.35
Supplemental Benefit Rate per Hour: $13.19
Supplemental Note: The above rate applies for Manhattan, Bronx, Brooklyn, Queens. $12.64 for Staten Island only.

Overtime
Time and one half the regular rate after a 7 hour day.
Time and one half the regular rate for Saturday.
Time and one half the regular rate for Sunday.

Overtime Holidays
Time and one half the regular rate for work on the following holiday(s).
New Year's Day
Lincoln's Birthday
Washington's Birthday
Memorial Day
Independence Day
Labor Day
Columbus Day
Election Day
Veteran's Day
Thanksgiving Day
Christmas Day

Paid Holidays
New Year's Day
Lincoln's Birthday
Washington's Birthday
Memorial Day
Independence Day
Labor Day
Columbus Day
Election Day
Veteran's Day
Thanksgiving Day
Christmas Day
Employees have the option of observing either Martin Luther King's Birthday or the day after Thanksgiving instead of Lincoln's Birthday

Shift Rates
For any workday that starts before 8A.M. or ends after 6P.M. there is a 10% differential for the applicable worker's hourly rate.

Vacation
After 6 months.....one week.
After 12 months but less than 7 years.....two weeks.
After 7 or more but less than 15 years.....three weeks.
After 15 years or more but less than 25 years.....four weeks.

(C.W.A.)

TILE FINISHER

Tile Finisher

Effective Period: 7/1/2016 - 6/30/2017
Wage Rate per Hour: $40.69
Supplemental Benefit Rate per Hour: $30.58

Overtime
Time and one half the regular rate after a 7 hour day.
Time and one half the regular rate for Saturday.
Double time the regular rate for Sunday.

Overtime Holidays
Double time the regular rate for work on the following holiday(s).
New Year's Day
President's Day
Good Friday
Memorial Day
Independence Day
Labor Day
Columbus Day
Veteran's Day
Thanksgiving Day
Day after Thanksgiving
Christmas Day

Paid Holidays
None

Shift Rates
Off shift work day (work performed outside the regular 8:00 A.M. to 3:30 P.M. workday): shift differential of one and one quarter (1¼) times the regular straight time rate of pay for the seven hours of actual off-shift work.

(Local #7)

TILE LAYER - SETTER

Tile Layer - Setter

Effective Period: 7/1/2016 - 6/30/2017
Wage Rate per Hour: $52.68
Supplemental Benefit Rate per Hour: $34.48

Overtime

Time and one half the regular rate after a 7 hour day.
Time and one half the regular rate for Saturday.
Double time the regular rate for Sunday.

Overtime Holidays

Double time the regular rate for work on the following holiday(s).
New Year's Day
President's Day
Good Friday
Memorial Day
Independence Day
Labor Day
Columbus Day
Veteran's Day
Thanksgiving Day
Day after Thanksgiving
Christmas Day

Shift Rates

Off shift work day (work performed outside the regular 8:00 A.M. to 3:30 P.M. workday): shift differential of one and one quarter (1¼) times the regular straight time rate of pay for the seven hours of actual off-shift work.

(Local #7)

TIMBERPERSON

Timberperson

Effective Period: 7/1/2016 - 6/30/2017
Wage Rate per Hour: $46.99
Supplemental Benefit Rate per Hour: $48.26

Overtime

Time and one half the regular rate after an 8 hour day.
Time and one half the regular rate for Saturday.
Double time the regular rate for Sunday.
Saturday may be used as a make-up day at straight time when a day is lost during that week to inclement weather.
Time and one half the regular hourly rate after 40 hours in any work week.

Overtime Holidays

Double time the regular rate for work on the following holiday(s).
New Year's Day
President's Day
Memorial Day
Independence Day
Labor Day
Columbus Day
Presidential Election Day
Thanksgiving Day
Christmas Day

Paid Holidays

None

Shift Rates

Off shift work commencing between 5:00 P.M. and 11:00 P.M. shall work eight and one half hours allowing for one half hour for lunch. The wage rate shall be 113% of the straight time hourly wage rate.

(Local #1536)

TUNNEL WORKER

Blasters, Mucking Machine Operators (Compressed Air Rates)

Effective Period: 7/1/2016 - 6/30/2017
Wage Rate per Hour: $60.97
Supplemental Benefit Rate per Hour: $50.72

Tunnel Workers (Compressed Air Rates)

Effective Period: 7/1/2016 - 6/30/2017
Wage Rate per Hour: $58.86
Supplemental Benefit Rate per Hour: $49.03

Top Nipper (Compressed Air Rates)

Effective Period: 7/1/2016 - 6/30/2017
Wage Rate per Hour: $57.78
Supplemental Benefit Rate per Hour: $48.16

Outside Lock Tender, Outside Gauge Tender,Muck Lock Tender (Compressed Air Rates)

Effective Period: 7/1/2016 - 6/30/2017

Wage Rate per Hour: $56.74
Supplemental Benefit Rate per Hour: $47.25

Bottom Bell & Top Bell Signal Person: Shaft Person (Compressed Air Rates)

Effective Period: 7/1/2016 - 6/30/2017
Wage Rate per Hour: $56.74
Supplemental Benefit Rate per Hour: $47.25

Changehouse Attendant: Powder Watchperson (Compressed Air Rates)

Effective Period: 7/1/2016 - 6/30/2017
Wage Rate per Hour: $49.69
Supplemental Benefit Rate per Hour: $44.69

Blasters (Free Air Rates)

Effective Period: 7/1/2016 - 6/30/2017
Wage Rate per Hour: $58.19
Supplemental Benefit Rate per Hour: $48.68

Tunnel Workers (Free Air Rates)

Effective Period: 7/1/2016 - 6/30/2017
Wage Rate per Hour: $55.69
Supplemental Benefit Rate per Hour: $46.61

All Others (Free Air Rates)

Effective Period: 7/1/2016 - 6/30/2017
Wage Rate per Hour: $51.45
Supplemental Benefit Rate per Hour: $43.13

Microtunneling (Free Air Rates)

Effective Period: 7/1/2016 - 6/30/2017
Wage Rate per Hour: $44.55
Supplemental Benefit Rate per Hour: $37.29

Overtime Description

For Repair-Maintenance Work on Existing Equipment and Facilities - Time and one half the regular rate after a 7 hour day, or for Saturday, or for Sunday. Double time the regular rate for work on a holiday.
For Small-Bore Micro Tunneling Machines - Time and one-half the regular rate shall be paid for all overtime.

Overtime

Double time the regular rate after an 8 hour day.
Double time the regular time rate for Saturday.
Double time the regular rate for Sunday.
Double time the regular rate for work on the following holiday(s).

Paid Holidays

New Year's Day
Lincoln's Birthday
President's Day
Memorial Day
Independence Day
Labor Day
Columbus Day
Election Day
Veteran's Day
Thanksgiving Day
Christmas Day

(Local #147)

WELDER

TO BE PAID AT THE RATE OF THE JOURNEYPERSON IN THE TRADE PERFORMING THE WORK.

(NO TEXT THIS PAGE)

OFFICE OF THE COMPTROLLER

CITY OF NEW YORK

220 APPRENTICESHIP PREVAILING WAGE SCHEDULE

APPENDIX

Pursuant to Labor Law §220 (3-e), only apprentices who are individually registered in a bona fide program to which the employer contractor is a participant and registered with the New York State Department of Labor, may be employed on a public work project.
Any employee listed on a payroll at an apprentice wage rate, who is not registered as above, shall be paid the journey person wage rate for the classification of work he actually performed.

Apprentice ratios are established to ensure the proper safety, training and supervision of apprentices. A ratio establishes the number of journey workers required for each apprentice in a program and on a job site. Ratios are interpreted as follows: in the case of a 1:1, 1:4 ratio, there must be one journey worker for the first apprentice, and four additional journey workers for each subsequent apprentice.

TABLE OF CONTENTS

CLASSIFICATION	PAGE
ASBESTOS HANDLER	3
BOILERMAKER	3
BRICKLAYER	4
CARPENTER	5
CEMENT MASON	6
CEMENT AND CONCRETE WORKER	7
DERRICKPERSON & RIGGER (STONE)	8
DOCKBUILDER/PILE DRIVER	8
ELECTRICIAN	9
ELEVATOR CONSTRUCTOR	12
ELEVATOR REPAIR & MAINTENANCE	13
ENGINEER	14
ENGINEER - OPERATING	14
FLOOR COVERER	15
GLAZIER	16
HEAT & FROST INSULATOR	16
HOUSE WRECKER	17
IRON WORKER - ORNAMENTAL	18
IRON WORKER - STRUCTURAL	18
LABORER (FOUNDATION, CONCRETE, EXCAVATING, STREET PIPE LAYER & COMMON)	19
MARBLE MECHANICS	20
MASON TENDER	21
METALLIC LATHER	22
MILLWRIGHT	22
PAVER AND ROADBUILDER	23
PAINTER	24
PAINTER - METAL POLISHER	25
PAINTER - STRUCTURAL STEEL	25
PLASTERER	26
PLASTERER - TENDER	27
PLUMBER	27
POINTER, WATERPROOFER, CAULKER, SANDBLASTER, STEAMBLASTER	29
ROOFER	29
SHEET METAL WORKER	30
SIGN ERECTOR	31
STEAMFITTER	32
STONE MASON - SETTER	33
TAPER	34
TILE LAYER - SETTER	35
TIMBERPERSON	35

ASBESTOS HANDLER
(Ratio of Apprentice Journeyperson: 1 to 1, 1 to 3)

Asbestos Handler (First 1000 Hours)

Effective Period: 7/1/2016 - 6/30/2017
Wage Rate Per Hour: 78% of Journeyperson's rate
Supplemental Benefit Rate Per Hour: $16.45

Asbestos Handler (Second 1000 Hours)

Effective Period: 7/1/2016 - 6/30/2017
Wage Rate Per Hour: 80% of Journeyperson's rate
Supplemental Benefit Rate Per Hour: $16.45

Asbestos Handler (Third 1000 Hours)

Effective Period: 7/1/2016 - 6/30/2017
Wage Rate Per Hour: 83% of Journeyperson's rate
Supplemental Benefit Rate Per Hour: $16.45

Asbestos Handler (Fourth 1000 Hours)

Effective Period: 7/1/2016 - 6/30/2017
Wage Rate Per Hour: 89% of Journeyperson's rate
Supplemental Benefit Rate Per Hour: $16.45

(Local #78)

BOILERMAKER
(Ratio of Apprentice to Journeyperson: 1 to 1, 1 to 3)

Boilermaker (First Year)

Effective Period: 7/1/2016 - 6/30/2017
Wage Rate Per Hour: 65% of Journeyperson's rate
Supplemental Benefit Rate Per Hour: $30.43
Effective 1/1/2017 - Supplemental Benefit Rate Per Hour: $30.84

Boilermaker (Second Year: 1st Six Months)

Effective Period: 7/1/2016 - 6/30/2017

Wage Rate Per Hour: 70% of Journeyperson's rate
Supplemental Benefit Rate Per Hour: $32.13
Effective 1/1/2017 - Supplemental Benefit Rate Per Hour: $32.57

Boilermaker (Second Year: 2nd Six Months)

Effective Period: 7/1/2016 - 6/30/2017
Wage Rate Per Hour: 75% of Journeyperson's rate
Supplemental Benefit Rate Per Hour: $33.82
Effective 1/1/2017 - Supplemental Benefit Rate Per Hour: $34.29

Boilermaker (Third Year: 1st Six Months)

Effective Period: 7/1/2016 - 6/30/2017
Wage Rate Per Hour: 80% of Journeyperson's rate
Supplemental Benefit Rate Per Hour: $35.53
Effective 1/1/2017 - Supplemental Benefit Rate Per Hour: $36.03

Boilermaker (Third Year: 2nd Six Months)

Effective Period: 7/1/2016 - 6/30/2017
Wage Rate Per Hour: 85% of Journeyperson's rate
Supplemental Benefit Rate Per Hour: $37.23
Effective 1/1/2017 - Supplemental Benefit Rate Per Hour: $37.76

Boilermaker (Fourth Year: 1st Six Months)

Effective Period: 7/1/2016 - 6/30/2017
Wage Rate Per Hour: 90% of Journeyperson's rate
Supplemental Benefit Rate Per Hour: $38.93
Effective 1/1/2017 - Supplemental Benefit Rate Per Hour: $39.51

Boilermaker (Fourth Year: 2nd Six Months)

Effective Period: 7/1/2016 - 6/30/2017
Wage Rate Per Hour: 95% of Journeyperson's rate
Supplemental Benefit Rate Per Hour: $40.63
Effective 1/1/2017 - Supplemental Benefit Rate Per Hour: $41.22

(Local #5)

BRICKLAYER
(Ratio of Apprentice to Journeyperson: 1 to 1, 1 to 4)

Bricklayer (First 750 Hours)

Effective Period: 7/1/2016 - 6/30/2017
Wage Rate Per Hour: 50% of Journeyperson's rate
Supplemental Benefit Rate Per Hour: $18.35

Bricklayer (Second 750 Hours)

Effective Period: 7/1/2016 - 6/30/2017
Wage Rate Per Hour: 60% of Journeyperson's rate
Supplemental Benefit Rate Per Hour: $18.35

Bricklayer (Third 750 Hours)

Effective Period: 7/1/2016 - 6/30/2017
Wage Rate Per Hour: 70% of Journeyperson's rate
Supplemental Benefit Rate Per Hour: $18.35

Bricklayer (Fourth 750 Hours)

Effective Period: 7/1/2016 - 6/30/2017
Wage Rate Per Hour: 80% of Journeyperson's rate
Supplemental Benefit Rate Per Hour: $18.35

Bricklayer (Fifth 750 Hours)

Effective Period: 7/1/2016 - 6/30/2017
Wage Rate Per Hour: 90% of Journeyperson's rate
Supplemental Benefit Rate Per Hour: $18.35

Bricklayer (Sixth 750 Hours)

Effective Period: 7/1/2016 - 6/30/2017
Wage Rate Per Hour: 95% of Journeyperson's rate
Supplemental Benefit Rate Per Hour: $18.35

(Bricklayer District Council)

CARPENTER
(Ratio of Apprentice to Journeyperson: 1 to 1, 1 to 4)

Carpenter (First Year)

Effective Period: 7/1/2016 - 6/30/2017
Wage Rate Per Hour: 40% of Journeyperson's rate
Supplemental Benefit Rate Per Hour For Building Apprentice: $31.34

Supplemental Benefit Rate Per Hour For Heavy Apprentice: $32.52

Carpenter (Second Year)

Effective Period: 7/1/2016 - 6/30/2017
Wage Rate Per Hour: 50% of Journeyperson's rate
Supplemental Benefit Rate Per Hour For Building Apprentice: $31.34
Supplemental Benefit Rate Per Hour For Heavy Apprentice: $32.52

Carpenter (Third Year)

Effective Period: 7/1/2016 - 6/30/2017
Wage Rate Per Hour: 65% of Journeyperson's rate
Supplemental Benefit Rate Per Hour For Building Apprentice: $31.34
Supplemental Benefit Rate Per Hour For Heavy Apprentice: $32.52

Carpenter (Fourth Year)

Effective Period: 7/1/2016 - 6/30/2017
Wage Rate Per Hour: 80% of Journeyperson's rate
Supplemental Benefit Rate Per Hour For Building Apprentice: $31.34
Supplemental Benefit Rate Per Hour For Heavy Apprentice: $32.52

(Carpenters District Council)

CEMENT MASON
(Ratio of Apprentice to Journeyperson: 1 to 1, 1 to 4)

Cement Mason (First Year)

Effective Period: 7/1/2016 - 6/30/2017
Wage and Supplemental Rate Per Hour: 50% of Journeyperson's Rate

Cement Mason (Second Year)

Effective Period: 7/1/2016 - 6/30/2017
Wage and Supplemental Rate Per Hour: 60% of Journeyperson's Rate

Cement Mason (Third Year)

Effective Period: 7/1/2016 - 6/30/2017
Wage and Supplemental Rate Per Hour: 70% of Journeyperson's Rate

(Local #780)

CEMENT AND CONCRETE WORKER
(Ratio of Apprentice to Journeyperson: 1 to 1, 1 to 3)

Cement & Concrete Worker (First 1333 hours)

Effective Period: 7/1/2016 - 6/30/2017
Wage Rate Per Hour: 50% of Journeyperson's rate
Supplemental Benefit Rate Per Hour: $16.25

Cement & Concrete Worker (Second 1333 hours)

Effective Period: 7/1/2016 - 6/30/2017
Wage Rate Per Hour: 65% of Journeyperson's rate
Supplemental Benefit Rate Per Hour: $21.08

Cement & Concrete Worker (Last 1334 hours)

Effective Period: 7/1/2016 - 6/30/2017
Wage Rate Per Hour: 80% of Journeyperson's rate
Supplemental Benefit Rate Per Hour: $21.90

Cement & Concrete Worker (Hired after 2/6/2016 - First 1334 hours)

Effective Period: 7/1/2016 - 6/30/2017
Wage Rate Per Hour: $17.00
Supplemental Benefit Rate Per Hour: $10.75

Cement & Concrete Worker (Hired after 2/6/2016 - Second 1334 hours)

Effective Period: 7/1/2016 - 6/30/2017
Wage Rate Per Hour: $22.10
Supplemental Benefit Rate Per Hour: $15.13

Cement & Concrete Worker (Hired after 2/6/2016 - Last 1334 hours)

Effective Period: 7/1/2016 - 6/30/2017
Wage Rate Per Hour: $27.20
Supplemental Benefit Rate Per Hour: $15.63

(Cement Concrete Workers District Council)

DERRICKPERSON & RIGGER (STONE)
(Ratio of Apprentice to Journeyperson: 1 to 1, 1 to 4)

Derrickperson & Rigger (stone) - First Year

Effective Period: 7/1/2016 - 6/30/2017
Wage Rate Per Hour: 50% of Journeyperson's rate
Supplemental Benefit Rate Per Hour: 50% of Journeyperson's rate

Derrickperson & Rigger (stone) - Second Year: 1st Six Months

Effective Period: 7/1/2016 - 6/30/2017
Wage Rate Per Hour: 70% of Journeyperson's rate
Supplemental Benefit Rate Per Hour: 75% of Journeyperson's rate

Derrickperson & Rigger (stone) - Second Year: 2nd Six Months

Effective Period: 7/1/2016 - 6/30/2017
Wage Rate Per Hour: 80% of Journeyperson's rate
Supplemental Benefit Rate Per Hour: 75% of Journeyperson's rate

Derrickperson & Rigger (stone) - Third Year

Effective Period: 7/1/2016 - 6/30/2017
Wage Rate Per Hour: 90% of Journeyperson's rate
Supplemental Benefit Rate Per Hour: 75% of Journeyperson's rate

(Local #197)

DOCKBUILDER/PILE DRIVER
(Ratio of Apprentice to Journeyperson: 1 to 1, 1 to 6)

Dockbuilder/Pile Driver (First Year)

Effective Period: 7/1/2016 - 6/30/2017
Wage Rate Per Hour: 40% of Journeyperson's rate
Supplemental Benefit Rate Per Hour: $32.52

Dockbuilder/Pile Driver (Second Year)

Effective Period: 7/1/2016 - 6/30/2017
Wage Rate Per Hour: 50% of Journeyperson's rate

Supplemental Benefit Rate Per Hour: $32.52

Dockbuilder/Pile Driver (Third Year)

Effective Period: 7/1/2016 - 6/30/2017
Wage Rate Per Hour: 65% of Journeyperson's rate
Supplemental Benefit Rate Per Hour: $32.52

Dockbuilder/Pile Driver (Fourth Year)

Effective Period: 7/1/2016 - 6/30/2017
Wage Rate Per Hour: 80% of Journeyperson's rate
Supplemental Benefit Rate Per Hour: $32.52

(Carpenters District Council)

ELECTRICIAN
(Ratio of Apprentice to Journeyperson: 1 to 1, 1 to 3)

Electrician (First Term: 0-6 Months)

Effective Period: 7/1/2016 - 5/10/2017
Wage Rate per Hour: $13.50
Supplemental Benefit Rate per Hour: $12.12
Overtime Supplemental Rate Per Hour: $13.01

Effective Period: 5/11/2017 - 6/30/2017
Wage Rate per Hour: $14.00
Supplemental Benefit Rate per Hour: $12.37
Overtime Supplemental Rate Per Hour: $13.29

Electrician (First Term: 7-12 Months)

Effective Period: 7/1/2016 - 5/10/2017
Wage Rate per Hour: $14.50
Supplemental Benefit Rate per Hour: $12.63
Overtime Supplemental Rate Per Hour: $13.58

Effective Period: 5/11/2017 - 6/30/2017
Wage Rate per Hour: $15.00
Supplemental Benefit Rate per Hour: $12.88
Overtime Supplemental Rate Per Hour: $13.87

Electrician (Second Term: 0-6 Months)

Effective Period: 7/1/2016 - 5/10/2017
Wage Rate per Hour: $15.50
Supplemental Benefit Rate per Hour: $13.14
Overtime Supplemental Rate Per Hour: $14.16

Effective Period: 5/11/2017 - 6/30/2017
Wage Rate per Hour: $16.00
Supplemental Benefit Rate per Hour: $13.39
Overtime Supplemental Rate Per Hour: $14.44

Electrician (Second Term: 7-12 Months)

Effective Period: 7/1/2016 - 5/10/2017
Wage Rate per Hour: $16.50
Supplemental Benefit Rate per Hour: $13.64
Overtime Supplemental Rate Per Hour: $14.73

Effective Period: 5/11/2017 - 6/30/2017
Wage Rate per Hour: $17.00
Supplemental Benefit Rate per Hour: $13.90
Overtime Supplemental Rate Per Hour: $15.02

Electrician (Third Term: 0-6 Months)

Effective Period: 7/1/2016 - 5/10/2017
Wage Rate per Hour: $17.50
Supplemental Benefit Rate per Hour: $14.15
Overtime Supplemental Rate Per Hour: $15.31

Effective Period: 5/11/2017 - 6/30/2017
Wage Rate per Hour: $18.00
Supplemental Benefit Rate per Hour: $14.41
Overtime Supplemental Rate Per Hour: $15.59

Electrician (Third Term: 7-12 Months)

Effective Period: 7/1/2016 - 5/10/2017
Wage Rate per Hour: $18.50
Supplemental Benefit Rate per Hour: $14.66
Overtime Supplemental Rate Per Hour: $15.88

Effective Period: 5/11/2017 - 6/30/2017
Wage Rate per Hour: $19.00
Supplemental Benefit Rate per Hour: $14.92
Overtime Supplemental Rate Per Hour: $16.17

Electrician (Fourth Term: 0-6 Months)

Effective Period: 7/1/2016 - 5/10/2017

Wage Rate per Hour: $19.50
Supplemental Benefit Rate per Hour: $15.17
Overtime Supplemental Rate Per Hour: $16.45

Effective Period: 5/11/2017 - 6/30/2017
Wage Rate per Hour: $20.00
Supplemental Benefit Rate per Hour: $15.43
Overtime Supplemental Rate Per Hour: $16.75

Electrician (Fourth Term: 7-12 Months)

Effective Period: 7/1/2016 - 5/10/2017
Wage Rate per Hour: $21.50
Supplemental Benefit Rate per Hour: $16.19
Overtime Supplemental Rate Per Hour: $17.60

Effective Period: 5/11/2017 - 6/30/2017
Wage Rate per Hour: $22.00
Supplemental Benefit Rate per Hour: $16.44
Overtime Supplemental Rate Per Hour: $17.89

Electrician (Fifth Term: 0-12 Months)

Effective Period: 7/1/2016 - 5/10/2017
Wage Rate per Hour: $23.50
Supplemental Benefit Rate per Hour: $19.54
Overtime Supplemental Rate Per Hour: $21.01

Effective Period: 5/11/2017 - 6/30/2017
Wage Rate per Hour: $24.00
Supplemental Benefit Rate per Hour: $19.80
Overtime Supplemental Rate Per Hour: $21.30

Electrician (Fifth Term: 13-18 Months)

Effective Period: 7/1/2016 - 5/10/2017
Wage Rate per Hour: $28.00
Supplemental Benefit Rate per Hour: $21.85
Overtime Supplemental Rate Per Hour: $23.60

Effective Period: 5/11/2017 - 6/30/2017
Wage Rate per Hour: $28.50
Supplemental Benefit Rate per Hour: $22.10
Overtime Supplemental Rate Per Hour: $23.89

Overtime Description

Overtime Wage paid at time and one half the regular rate

(Local #3)

ELEVATOR CONSTRUCTOR
(Ratio of Apprentice to Journeyperson: 1 to 1, 1 to 2)

Elevator (Constructor) - First Year

Effective Period: 7/1/2016 - 3/16/2017
Wage Rate Per Hour: 50% of Journeyperson's rate
Supplemental Rate Per Hour: $28.24

Effective Period: 3/17/2017 - 6/30/2017
Wage Rate Per Hour: 50% of Journeyperson's rate
Supplemental Rate Per Hour: $29.72

Elevator (Constructor) - Second Year

Effective Period: 7/1/2016 - 3/16/2017
Wage Rate Per Hour: 55% of Journeyperson's rate
Supplemental Rate Per Hour: $28.67

Effective Period: 3/17/2017 - 6/30/2017
Wage Rate Per Hour: 55% of Journeyperson's rate
Supplemental Rate Per Hour: $30.15

Elevator (Constructor) - Third Year

Effective Period: 7/1/2016 - 3/16/2017
Wage Rate Per Hour: 65% of Journeyperson's rate
Supplemental Rate Per Hour: $29.52

Effective Period: 3/17/2017 - 6/30/2017
Wage Rate Per Hour: 65% of Journeyperson's rate
Supplemental Rate Per Hour: $31.03

Elevator (Constructor) - Fourth Year

Effective Period: 7/1/2016 - 3/16/2017
Wage Rate Per Hour: 75% of Journeyperson's rate
Supplemental Rate Per Hour: $30.37

Effective Period: 3/17/2017 - 6/30/2017
Wage Rate Per Hour: 75% of Journeyperson's rate
Supplemental Rate Per Hour: $31.91

(Local #1)

ELEVATOR REPAIR & MAINTENANCE
(Ratio of Apprentice to Journeyperson: 1 to 1, 1 to 2)

Elevator Service/Modernization Mechanic (First Year)

Effective Period: 7/1/2016 - 3/16/2017
Wage Rate Per Hour: 50% of Journeyperson's rate
Supplemental Benefit Per Hour: $28.33

Effective Period: 3/17/2017 - 6/30/2017
Wage Rate Per Hour: 50% of Journeyperson's rate
Supplemental Benefit Per Hour: $29.80

Elevator Service/Modernization Mechanic (Second Year)

Effective Period: 7/1/2016 - 3/16/2017
Wage Rate Per Hour: 55% of Journeyperson's rate
Supplemental Benefit Per Hour: $28.74

Effective Period: 3/17/2017 - 6/30/2017
Wage Rate Per Hour: 55% of Journeyperson's rate
Supplemental Benefit Per Hour: $30.23

Elevator Service/Modernization Mechanic (Third Year)

Effective Period: 7/1/2016 - 3/16/2017
Wage Rate Per Hour: 65% of Journeyperson's rate
Supplemental Benefit Per Hour: $29.58

Effective Period: 3/17/2017 - 6/30/2017
Wage Rate Per Hour: 65% of Journeyperson's rate
Supplemental Benefit Per Hour: $31.09

Elevator Service/Modernization Mechanic (Fourth Year)

Effective Period: 7/1/2016 - 3/16/2017
Wage Rate Per Hour: 75% of Journeyperson's rate
Supplemental Benefit Per Hour: $30.42

Effective Period: 3/17/2017 - 6/30/2017
Wage Rate Per Hour: 75% of Journeyperson's rate
Supplemental Benefit Per Hour: $31.95

(Local #1)

ENGINEER
(Ratio of Apprentice to Journeyperson: 1 to 1, 1 to 5)

Engineer - First Year

Effective Period: 7/1/2016 - 6/30/2017
Wage Rate per Hour: $24.28
Supplemental Benefit Rate per Hour: $23.41

Engineer - Second Year

Effective Period: 7/1/2016 - 6/30/2017
Wage Rate per Hour: $30.35
Supplemental Benefit Rate per Hour: $23.41

Engineer - Third Year

Effective Period: 7/1/2016 - 6/30/2017
Wage Rate per Hour: $33.38
Supplemental Benefit Rate per Hour: $23.41

Engineer - Fourth Year

Effective Period: 7/1/2016 - 6/30/2017
Wage Rate per Hour: $36.41
Supplemental Benefit Rate per Hour: $23.41

(Local #15)

ENGINEER - OPERATING
(Ratio of Apprentice to Journeyperson: 1 to 1, 1 to 5)

Operating Engineer - First Year

Effective Period: 7/1/2016 - 6/30/2017
Wage Rate Per Hour 40% of Journeyperson's Rate
Supplemental Benefit Per Hour: $20.85

Operating Engineer - Second Year

Effective Period: 7/1/2016 - 6/30/2017
Wage Rate Per Hour: 50% of Journeyperson's Rate
Supplemental Benefit Per Hour: $20.85

Operating Engineer - Third Year

Effective Period: 7/1/2016 - 6/30/2017
Wage Rate Per Hour: 60% of Journeyperson's Rate
Supplemental Benefit Per Hour: $20.85

(Local #14)

FLOOR COVERER
(Ratio of Apprentice to Journeyperson: 1 to 1, 1 to 4)

Floor Coverer (First Year)

Effective Period: 7/1/2016 - 6/30/2017
Wage Rate Per Hour: 40% of Journeyperson's rate
Supplemental Rate Per Hour: $31.14

Floor Coverer (Second Year)

Effective Period: 7/1/2016 - 6/30/2017
Wage Rate Per Hour: 50% of Journeyperson's rate
Supplemental Rate Per Hour: $31.14

Floor Coverer (Third Year)

Effective Period: 7/1/2016 - 6/30/2017
Wage Rate Per Hour: 65% of Journeyperson's rate
Supplemental Rate Per Hour: $31.14

Floor Coverer (Fourth Year)

Effective Period: 7/1/2016 - 6/30/2017
Wage Rate Per Hour: 80% of Journeyperson's rate
Supplemental Rate Per Hour: $31.14

(Carpenters District Council)

GLAZIER
(Ratio of Apprentice to Journeyperson: 1 to 1, 1 to 3)

Glazier (First Year)

Effective Period: 7/1/2016 - 6/30/2017
Wage Rate Per Hour: 40% of Journeyperson's rate
Supplemental Rate Per Hour: $14.14

Glazier (Second Year)

Effective Period: 7/1/2016 - 6/30/2017
Wage Rate Per Hour: 50% of Journeyperson's rate
Supplemental Rate Per Hour: $23.77

Glazier (Third Year)

Effective Period: 7/1/2016 - 6/30/2017
Wage Rate Per Hour: 60% of Journeyperson's rate
Supplemental Rate Per Hour: $26.73

Glazier (Fourth Year)

Effective Period: 7/1/2016 - 6/30/2017
Wage Rate Per Hour: 80% of Journeyperson's rate
Supplemental Rate Per Hour: $32.14

(Local #1281)

HEAT & FROST INSULATOR
(Ratio of Apprentice to Journeyperson: 1 to 1, 1 to 4)

Heat & Frost Insulator (First Year)

Effective Period: 7/1/2016 - 6/30/2017
Wage and Supplemental Rate Per Hour: 40% of Journeyperson's rate

Heat & Frost Insulator (Second Year)

Effective Period: 7/1/2016 - 6/30/2017
Wage and Supplemental Rate Per Hour: 60% of Journeyperson's rate

Heat & Frost Insulator (Third Year)

Effective Period: 7/1/2016 - 6/30/2017
Wage and Supplemental Rate Per Hour: 70% of Journeyperson's rate

Heat & Frost Insulator (Fourth Year)

Effective Period: 7/1/2016 - 6/30/2017
Wage and Supplemental Rate Per Hour: 80% of Journeyperson's rate

(Local #12)

HOUSE WRECKER
(TOTAL DEMOLITION)
(Ratio of Apprentice to Journeyperson: 1 to 1, 1 to 3)

House Wrecker - First Year

Effective Period: 7/1/2016 - 6/30/2017
Wage Rate per Hour: $21.17
Supplemental Benefit Rate per Hour: $17.99

House Wrecker - Second Year

Effective Period: 7/1/2016 - 6/30/2017
Wage Rate per Hour: $22.32
Supplemental Benefit Rate per Hour: $17.99

House Wrecker - Third Year

Effective Period: 7/1/2016 - 6/30/2017
Wage Rate per Hour: $23.97
Supplemental Benefit Rate per Hour: $17.99

House Wrecker - Fourth Year

Effective Period: 7/1/2016 - 6/30/2017
Wage Rate per Hour: $26.53
Supplemental Benefit Rate per Hour: $17.99

(Mason Tenders District Council)

IRON WORKER - ORNAMENTAL
(Ratio of Apprentice to Journeyperson: 1 to 1, 1 to 4)

Iron Worker (Ornamental) - 1st Ten Months

Effective Period: 7/1/2016 - 6/30/2017
Wage Rate Per Hour: 50% of Journeyperson's rate
Supplemental Rate Per Hour: $37.90

Iron Worker (Ornamental) - 11 -16 Months

Effective Period: 7/1/2016 - 6/30/2017
Wage Rate Per Hour: 55% of Journeyperson's rate
Supplemental Rate Per Hour: $39.06

Iron Worker (Ornamental) - 17 - 22 Months

Effective Period: 7/1/2016 - 6/30/2017
Wage Rate Per Hour: 60% of Journeyperson's rate
Supplemental Rate Per Hour: $40.23

Iron Worker (Ornamental) - 23 - 28 Months

Effective Period: 7/1/2016 - 6/30/2017
Wage Rate Per Hour: 70% of Journeyperson's rate
Supplemental Rate Per Hour: $42.57

Iron Worker (Ornamental) - 29 - 36 Months

Effective Period: 7/1/2016 - 6/30/2017
Wage Rate Per Hour: 80% of Journeyperson's rate
Supplemental Rate Per Hour: $44.90

(Local #580)

IRON WORKER - STRUCTURAL
(Ratio of Apprentice to Journeyperson: 1 to 1, 1 to 6)

Iron Worker (Structural) - 1st Six Months

Effective Period: 7/1/2016 - 6/30/2017
Wage Rate per Hour: $25.85
Supplemental Benefit Rate per Hour: $48.35

Iron Worker (Structural) - 7- 18 Months

Effective Period: 7/1/2016 - 6/30/2017
Wage Rate per Hour: $26.45
Supplemental Benefit Rate per Hour: $48.35

Iron Worker (Structural) - 19 - 36 months

Effective Period: 7/1/2016 - 6/30/2017
Wage Rate per Hour: $27.05
Supplemental Benefit Rate per Hour: $48.35

(Local #40 and #361)

LABORER (FOUNDATION, CONCRETE, EXCAVATING, STREET PIPE LAYER & COMMON)
(Ratio Apprentice to Journeyperson: 1 to 1, 1 to 3)

Laborer (Foundation, Concrete, Excavating, Street Pipe Layer & Common) - First 1000 hours

Effective Period: 7/1/2016 - 6/30/2017
Wage Rate Per Hour: 50% of Journeyperson's rate
Supplemental Rate Per Hour: $38.63

Laborer (Foundation, Concrete, Excavating, Street Pipe Layer & Common) - Second 1000 hours

Effective Period: 7/1/2016 - 6/30/2017
Wage Rate Per Hour: 60% of Journeyperson's rate
Supplemental Rate Per Hour: $38.63

Laborer (Foundation, Concrete, Excavating, Street Pipe Layer & Common) - Third 1000 hours

Effective Period: 7/1/2016 - 6/30/2017
Wage Rate Per Hour: 75% of Journeyperson's rate
Supplemental Rate Per Hour: $38.63

Laborer (Foundation, Concrete, Excavating, Street Pipe Layer & Common) - Fourth 1000 hours

Effective Period: 7/1/2016 - 6/30/2017
Wage Rate Per Hour: 90% of Journeyperson's rate
Supplemental Rate Per Hour: $38.63

(Local #731)

MARBLE MECHANICS
(Ratio of Apprentice to Journeyperson: 1 to 1, 1 to 4)

Cutters & Setters - First 750 Hours

Effective Period: 7/1/2016 - 6/30/2017
Wage and Supplemental Rate Per Hour: 50% of Journeyperson's rate

NO BENEFITS PAID DURING THE FIRST TWO MONTHS (PROBATIONARY PERIOD)

Cutters & Setters - Second 750 Hours

Effective Period: 7/1/2016 - 6/30/2017
Wage and Supplemental Rate Per Hour: 55% of Journeyperson's rate

Cutters & Setters - Third 750 Hours

Effective Period: 7/1/2016 - 6/30/2017
Wage and Supplemental Rate Per Hour: 65% of Journeyperson's rate

Cutters & Setters - Fourth 750 Hours

Effective Period: 7/1/2016 - 6/30/2017
Wage and Supplemental Rate Per Hour: 75% of Journeyperson's rate

Cutters & Setters - Fifth 750 Hours

Effective Period: 7/1/2016 - 6/30/2017
Wage and Supplemental Rate Per Hour: 85% of Journeyperson's rate

Cutters & Setters - Sixth 750 Hours

Effective Period: 7/1/2016 - 6/30/2017
Wage and Supplemental Rate Per Hour: 95% of Journeyperson's rate

Polishers & Finishers - First 750 Hours

Effective Period: 7/1/2016 - 6/30/2017
Wage and Supplemental Rate Per Hour: 50% of Journeyperson's rate

NO BENEFITS PAID DURING THE FIRST TWO MONTHS (PROBATIONARY PERIOD)

Polishers & Finishers - Second 750 Hours

Effective Period: 7/1/2016 - 6/30/2017
Wage and Supplemental Rate Per Hour: 60% of Journeyperson's rate

Polishers & Finishers - Third 750 Hours

Effective Period: 7/1/2016 - 6/30/2017
Wage and Supplemental Rate Per Hour: 75% of Journeyperson's rate

Polishers & Finishers - Fourth 750 Hours

Effective Period: 7/1/2016 - 6/30/2017
Wage and Supplemental Rate Per Hour: 90% of Journeyperson's rate

(Local #7)

MASON TENDER
(Ratio of Apprentice to Journeyperson: 1 to 1, 1 to 3)

Mason Tender - First Year

Effective Period: 7/1/2016 - 6/30/2017
Wage Rate per Hour: $21.39
Supplemental Benefit Rate per Hour: $19.10

Mason Tender - Second Year

Effective Period: 7/1/2016 - 6/30/2017
Wage Rate per Hour: $22.54
Supplemental Benefit Rate per Hour: $19.10

Mason Tender - Third Year

Effective Period: 7/1/2016 - 6/30/2017
Wage Rate per Hour: $24.29
Supplemental Benefit Rate per Hour: $19.15

Mason Tender - Fourth Year

Effective Period: 7/1/2016 - 6/30/2017
Wage Rate per Hour: $26.95
Supplemental Benefit Rate per Hour: $19.15

(Local #79)

METALLIC LATHER
(Ratio of Apprentice to Journeyperson: 1 to 1, 1 to 3)

Metallic Lather (First Year)

Effective Period: 7/1/2016 - 6/30/2017
Wage Rate per Hour: $23.01
Supplemental Benefit Rate per Hour: $17.95

Metallic Lather (Second Year)

Effective Period: 7/1/2016 - 6/30/2017
Wage Rate per Hour: $28.11
Supplemental Benefit Rate per Hour: $17.95

Metallic Lather (Third Year)

Effective Period: 7/1/2016 - 6/30/2017
Wage Rate per Hour: $33.21
Supplemental Benefit Rate per Hour: $17.95

(Local #46)

MILLWRIGHT
(Ratio of Apprentice to Journeyperson: 1 to 1, 1 to 4)

Millwright (First Year)

Effective Period: 7/1/2016 - 6/30/2017
Wage Rate per Hour: $28.33
Supplemental Benefit Rate per Hour: $34.28

Millwright (Second Year)

Effective Period: 7/1/2016 - 6/30/2017
Wage Rate per Hour: $33.48
Supplemental Benefit Rate per Hour: $37.88

Millwright (Third Year)

Effective Period: 7/1/2016 - 6/30/2017
Wage Rate per Hour: $38.63
Supplemental Benefit Rate per Hour: $42.13

Millwright (Fourth Year)

Effective Period: 7/1/2016 - 6/30/2017
Wage Rate per Hour: $48.93
Supplemental Benefit Rate per Hour: $48.69

(Local #740)

PAVER AND ROADBUILDER
(Ratio of Apprentice to Journeyperson: 1 to 1, 1 to 3)

Paver and Roadbuilder - First Year (Minimum 1000 hours)

Effective Period: 7/1/2016 - 6/30/2017
Wage Rate per Hour: $27.55
Supplemental Benefit Rate per Hour: $18.20

Paver and Roadbuilder - Second Year (Minimum 1000 hours)

Effective Period: 7/1/2016 - 6/30/2017
Wage Rate per Hour: $29.19
Supplemental Benefit Rate per Hour: $18.20

(Local #1010)

PAINTER
(Ratio of Apprentice to Journeyperson: 1 to 1, 1 to 3)

Painter - Brush & Roller - First Year

Effective Period: 7/1/2016 - 4/30/2017
Wage Rate per Hour: $17.00
Supplemental Benefit Rate per Hour: $12.38

Effective Period: 5/1/2017 - 6/30/2017
Wage Rate per Hour: $17.64
Supplemental Benefit Rate per Hour: $12.78

Painter - Brush & Roller - Second Year

Effective Period: 7/1/2016 - 4/30/2017
Wage Rate per Hour: $21.25
Supplemental Benefit Rate per Hour: $16.23

Effective Period: 5/1/2017 - 6/30/2017
Wage Rate per Hour: $22.05
Supplemental Benefit Rate per Hour: $16.63

Painter - Brush & Roller - Third Year

Effective Period: 7/1/2016 - 4/30/2017
Wage Rate per Hour: $25.50
Supplemental Benefit Rate per Hour: $19.14

Effective Period: 5/1/2017 - 6/30/2017
Wage Rate per Hour: $26.46
Supplemental Benefit Rate per Hour: $19.54

Painter - Brush & Roller - Fourth Year

Effective Period: 7/1/2016 - 4/30/2017
Wage Rate per Hour: $34.00
Supplemental Benefit Rate per Hour: $24.52

Effective Period: 5/1/2017 - 6/30/2017
Wage Rate per Hour: $35.28
Supplemental Benefit Rate per Hour: $24.92

(District Council of Painters)

PAINTER - METAL POLISHER
(Ratio of Apprentice to Journeyperson: 1 to 1, 1 to 3)

Metal Polisher (First Year)

Effective Period: 7/1/2016 - 6/30/2017
Wage Rate per Hour: $11.75
Supplemental Benefit Rate per Hour: $5.13

Metal Polisher (Second Year)

Effective Period: 7/1/2016 - 6/30/2017
Wage Rate per Hour: $13.00
Supplemental Benefit Rate per Hour: $5.13

Metal Polisher (Third Year)

Effective Period: 7/1/2016 - 6/30/2017
Wage Rate per Hour: $15.75
Supplemental Benefit Rate per Hour: $5.13

(Local 8A-28)

PAINTER - STRUCTURAL STEEL
(Ratio of Apprentice to Journeyperson: 1 to 1, 1 to 3)

Painters - Structural Steel (First Year)

Effective Period: 7/1/2016 - 6/30/2017
Wage and Supplemental Rate Per Hour: 40% of Journeyperson's rate

Painters - Structural Steel (Second Year)

Effective Period: 7/1/2016 - 6/30/2017
Wage and Supplemental Rate Per Hour: 60% of Journeyperson's rate

Painters - Structural Steel (Third Year)

Effective Period: 7/1/2016 - 6/30/2017
Wage and Supplemental Rate Per Hour: 80% of Journeyperson's rate

(Local #806)

PLASTERER
(Ratio of Apprentice to Journeyperson: 1 to 1, 1 to 3)

Plasterer - First Year: 1st Six Months

Effective Period: 7/1/2016 - 6/30/2017
Wage Rate Per Hour: 40% of Journeyperson's rate
Supplemental Rate Per Hour: $15.91

Plasterer - First Year: 2nd Six Months

Effective Period: 7/1/2016 - 6/30/2017
Wage Rate Per Hour: 45% of Journeyperson's rate
Supplemental Rate Per Hour: $16.39

Plasterer - Second Year: 1st Six Months

Effective Period: 7/1/2016 - 6/30/2017
Wage Rate Per Hour: 55% of Journeyperson's rate
Supplemental Rate Per Hour: $18.36

Plasterer - Second Year: 2nd Six Months

Effective Period: 7/1/2016 - 6/30/2017
Wage Rate Per Hour: 60% of Journeyperson's rate
Supplemental Rate Per Hour: $19.44

Plasterer - Third Year: 1st Six Months

Effective Period: 7/1/2016 - 6/30/2017
Wage Rate Per Hour: 70% of Journeyperson's rate
Supplemental Rate Per Hour: $21.61

Plasterer - Third Year: 2nd Six Months

Effective Period: 7/1/2016 - 6/30/2017
Wage Rate Per Hour: 75% of Journeyperson's rate
Supplemental Rate Per Hour: $22.69

(Local #530)

PLASTERER - TENDER
(Ratio of Apprentice to Journeyperson: 1 to 1, 1 to 3)

Plasterer Tender - First Year

Effective Period: 7/1/2016 - 6/30/2017
Wage Rate per Hour: $21.39
Supplemental Benefit Rate per Hour: $19.10

Plasterer Tender - Second Year

Effective Period: 7/1/2016 - 6/30/2017
Wage Rate per Hour: $22.54
Supplemental Benefit Rate per Hour: $19.10

Plasterer Tender - Third Year

Effective Period: 7/1/2016 - 6/30/2017
Wage Rate per Hour: $24.29
Supplemental Benefit Rate per Hour: $19.15

Plasterer Tender - Fourth Year

Effective Period: 7/1/2016 - 6/30/2017
Wage Rate per Hour: $26.95
Supplemental Benefit Rate per Hour: $19.15

(Local #79)

PLUMBER
(Ratio of Apprentice to Journeyperson: 1 to 1, 1 to 3)

Plumber - First Year: 1st Six Months

Effective Period: 7/1/2016 - 6/30/2017

Wage Rate per Hour: $14.00
Supplemental Benefit Rate per Hour: $0.71

Plumber - First Year: 2nd Six Months

Effective Period: 7/1/2016 - 6/30/2017
Wage Rate per Hour: $14.00
Supplemental Benefit Rate per Hour: $2.96

Plumber - Second Year

Effective Period: 7/1/2016 - 6/30/2017
Wage Rate per Hour: $24.07
Supplemental Benefit Rate per Hour: $13.21

Plumber - Third Year

Effective Period: 7/1/2016 - 6/30/2017
Wage Rate per Hour: $26.17
Supplemental Benefit Rate per Hour: $13.21

Plumber - Fourth Year

Effective Period: 7/1/2016 - 6/30/2017
Wage Rate per Hour: $29.02
Supplemental Benefit Rate per Hour: $13.21

Plumber - Fifth Year: 1st Six Months

Effective Period: 7/1/2016 - 6/30/2017
Wage Rate per Hour: $30.42
Supplemental Benefit Rate per Hour: $13.21

Plumber - Fifth Year: 2nd Six Months

Effective Period: 7/1/2016 - 6/30/2017
Wage Rate per Hour: $42.49
Supplemental Benefit Rate per Hour: $13.21

(Plumbers Local #1)

POINTER, WATERPROOFER, CAULKER, SANDBLASTER, STEAMBLASTER

(Exterior Building Renovation)
(Ratio of Apprentice to Journeyperson: 1 to 1, 1 to 4)

Pointer, Waterproofer, Caulker, Sandblaster, Steamblaster - First Year

Effective Period: 7/1/2016 - 6/30/2017
Wage Rate per Hour: $26.52
Supplemental Benefit Rate per Hour: $12.10

Pointer, Waterproofer, Caulker, Sandblaster, Steamblaster - Second Year

Effective Period: 7/1/2016 - 6/30/2017
Wage Rate per Hour: $27.89
Supplemental Benefit Rate per Hour: $16.75

Pointer, Waterproofer, Caulker, Sandblaster, Steamblaster - Third Year

Effective Period: 7/1/2016 - 6/30/2017
Wage Rate per Hour: $33.98
Supplemental Benefit Rate per Hour: $19.50

Pointer, Waterproofer, Caulker, Sandblaster, Steamblaster - Fourth Year

Effective Period: 7/1/2016 - 6/30/2017
Wage Rate per Hour: $40.80
Supplemental Benefit Rate per Hour: $20.35

(Bricklayer District Council)

ROOFER

(Ratio of Apprentice to Journeyperson: 1 to 1, 1 to 2)

Roofer - First Year

Effective Period: 7/1/2016 - 6/30/2017
Wage and Supplemental Rate Per Hour: 35% of Journeyperson's Rate

Roofer - Second Year

Effective Period: 7/1/2016 - 6/30/2017
Wage and Supplemental Rate Per Hour: 50% of Journeyperson's Rate

Roofer - Third Year

Effective Period: 7/1/2016 - 6/30/2017
Wage and Supplemental Rate Per Hour: 60% of Journeyperson's Rate

Roofer - Fourth Year

Effective Period: 7/1/2016 - 6/30/2017
Wage and Supplemental Rate Per Hour: 75% of Journeyperson's Rate

(Local #8)

SHEET METAL WORKER
(Ratio of Apprentice to Journeyperson: 1 to 1, 1 to 3)

Sheet Metal Worker (0-6 Months)

Effective Period: 7/1/2016 - 6/30/2017
Wage Rate Per Hour: 25% of Journeyperson's rate
Supplemental Rate Per Hour: $6.35

Sheet Metal Worker (7-18 Months)

Effective Period: 7/1/2016 - 6/30/2017
Wage Rate Per Hour: 35% of Journeyperson's rate
Supplemental Rate Per Hour: $17.12

Sheet Metal Worker (19-30 Months)

Effective Period: 7/1/2016 - 6/30/2017
Wage Rate Per Hour: 45% of Journeyperson's rate
Supplemental Rate Per Hour: $23.54

Sheet Metal Worker (31-36 Months)

Effective Period: 7/1/2016 - 6/30/2017
Wage Rate Per Hour: 55% of Journeyperson's rate
Supplemental Rate Per Hour: $27.70

Sheet Metal Worker (37-42 Months)

Effective Period: 7/1/2016 - 6/30/2017

Wage Rate Per Hour: 60% of Journeyperson's rate
Supplemental Rate Per Hour: $29.11

Sheet Metal Worker (43-48 Months)

Effective Period: 7/1/2016 - 6/30/2017
Wage Rate Per Hour: 70% of Journeyperson's rate
Supplemental Rate Per Hour: $33.96

Sheet Metal Worker (49-54 Months)

Effective Period: 7/1/2016 - 6/30/2017
Wage Rate Per Hour: 75% of Journeyperson's rate
Supplemental Rate Per Hour: $36.07

Sheet Metal Worker (55-60 Months)

Effective Period: 7/1/2016 - 6/30/2017
Wage Rate Per Hour: 80% of Journeyperson's rate
Supplemental Rate Per Hour: $38.15

(Local #28)

SIGN ERECTOR
(Ratio of Apprentice to Journeyperson: 1 to 1, 1 to 4)

Sign Erector - First Year: 1st Six Months

Effective Period: 7/1/2016 - 6/30/2017
Wage Rate Per Hour: 35% of Journeyperson's rate
Supplemental Rate Per Hour: $13.95

Sign Erector - First Year: 2nd Six Months

Effective Period: 7/1/2016 - 6/30/2017
Wage Rate Per Hour: 40% of Journeyperson's rate
Supplemental Rate Per Hour: $15.83

Sign Erector - Second Year: 1st Six Months

Effective Period: 7/1/2016 - 6/30/2017
Wage Rate Per Hour: 45% of Journeyperson's rate
Supplemental Rate Per Hour: $17.72

Sign Erector - Second Year: 2nd Six Months

Effective Period: 7/1/2016 - 6/30/2017
Wage Rate Per Hour: 50% of Journeyperson's rate
Supplemental Rate Per Hour: $19.60

Sign Erector - Third Year: 1st Six Months

Effective Period: 7/1/2016 - 6/30/2017
Wage Rate Per Hour: 55% of Journeyperson's rate
Supplemental Rate Per Hour: $26.23

Sign Erector - Third Year: 2nd Six Months

Effective Period: 7/1/2016 - 6/30/2017
Wage Rate Per Hour: 60% of Journeyperson's rate
Supplemental Rate Per Hour: $28.24

Sign Erector - Fourth Year: 1st Six Months

Effective Period: 7/1/2016 - 6/30/2017
Wage Rate Per Hour: 65% of Journeyperson's rate
Supplemental Rate Per Hour: $30.98

Sign Erector - Fourth Year: 2nd Six Months

Effective Period: 7/1/2016 - 6/30/2017
Wage Rate Per Hour: 70% of Journeyperson's rate
Supplemental Rate Per Hour: $33.06

Sign Erector - Fifth Year

Effective Period: 7/1/2016 - 6/30/2017
Wage Rate Per Hour: 75% of Journeyperson's rate
Supplemental Rate Per Hour: $35.15

Sign Erector - Sixth Year

Effective Period: 7/1/2016 - 6/30/2017
Wage Rate Per Hour: 80% of Journeyperson's rate
Supplemental Rate Per Hour: $37.22

(Local #137)

STEAMFITTER
(Ratio of Apprentice to Journeyperson: 1 to 1, 1 to 3)

Steamfitter - First Year

Effective Period: 7/1/2016 - 6/30/2017
Wage Rate and Supplemental Per Hour: 40% of Journeyperson's rate

Steamfitter - Second Year

Effective Period: 7/1/2016 - 6/30/2017
Wage Rate and Supplemental Rate Per Hour: 50% of Journeyperson's rate.

Steamfitter - Third Year

Effective Period: 7/1/2016 - 6/30/2017
Wage Rate and Supplemental Rate per Hour: 65% of Journeyperson's rate.

Steamfitter - Fourth Year

Effective Period: 7/1/2016 - 6/30/2017
Wage Rate and Supplemental Rate Per Hour: 80% of Journeyperson's rate.

Steamfitter - Fifth Year

Effective Period: 7/1/2016 - 6/30/2017
Wage Rate and Supplemental Rate Per Hour: 85% of Journeyperson's rate.

(Local #638)

STONE MASON - SETTER
(Ratio Apprentice of Journeyperson: 1 to 1, 1 to 2)

Stone Mason - Setters - First 750 Hours

Effective Period: 7/1/2016 - 6/30/2017
Wage and Supplemental Rate Per Hour: 50% of Journeyperson's rate

Stone Mason - Setters - Second 750 Hours

Effective Period: 7/1/2016 - 6/30/2017
Wage Rate Per Hour: 60% of Journeyperson's rate
Supplemental Rate Per Hour: 50% of Journeyperson's rate

Stone Mason - Setters - Third 750 Hours

Effective Period: 7/1/2016 - 6/30/2017
Wage Rate Per Hour: 70% of Journeyperson's rate
Supplemental Rate Per Hour: 50% of Journeyperson's rate

Stone Mason - Setters - Fourth 750 Hours

Effective Period: 7/1/2016 - 6/30/2017
Wage Rate Per Hour: 80% of Journeyperson's rate
Supplemental Rate Per Hour: 50% of Journeyperson's rate

Stone Mason - Setters - Fifth 750 Hours

Effective Period: 7/1/2016 - 6/30/2017
Wage Rate Per Hour: 90% of Journeyperson's rate
Supplemental Rate Per Hour: 50% of Journeyperson's rate

Stone Mason - Setters - Sixth 750 Hours

Effective Period: 7/1/2016 - 6/30/2017
Wage Rate Per Hour: 100% of Journeyperson's rate
Supplemental Rate Per Hour: 50% of Journeyperson's rate

(Bricklayers District Council)

TAPER
(Ratio of Apprentice to Journeyperson: 1 to 1, 1 to 4)

Drywall Taper - First Year

Effective Period: 7/1/2016 - 6/30/2017
Wage and Supplemental Rate Per Hour: 40% of Journeyperson's rate

Drywall Taper - Second Year

Effective Period: 7/1/2016 - 6/30/2017
Wage and Supplemental Rate Per Hour: 60% of Journeyperson's rate

Drywall Taper - Third Year

Effective Period: 7/1/2016 - 6/30/2017
Wage and Supplemental Rate Per Hour: 80% of Journeyperson's rate

(Local #1974)

TILE LAYER - SETTER
(Ratio of Apprentice to Journeyperson: 1 to 1, 1 to 4)

Tile Layer - Setter - First 750 Hours

Effective Period: 7/1/2016 - 6/30/2017
Wage and Supplemental Rate Per Hour: 50% of Journeyperson's rate

Tile Layer - Setter - Second 750 Hours

Effective Period: 7/1/2016 - 6/30/2017
Wage and Supplemental Rate Per Hour: 55% of Journeyperson's rate

Tile Layer - Setter - Third 750 Hours

Effective Period: 7/1/2016 - 6/30/2017
Wage and Supplemental Rate Per Hour: 65% of Journeyperson's rate

Tile Layer - Setter - Fourth 750 Hours

Effective Period: 7/1/2016 - 6/30/2017
Wage and Supplemental Rate Per Hour: 75% of Journeyperson's rate

Tile Layer - Setter - Fifth 750 Hours

Effective Period: 7/1/2016 - 6/30/2017
Wage and Supplemental Rate Per Hour: 85% of Journeyperson's rate

Tile Layer - Setter - Sixth 750 Hours

Effective Period: 7/1/2016 - 6/30/2017
Wage and Supplemental Rate Per Hour: 95% of Journeyperson's rate

(Local #7)

TIMBERPERSON
(Ratio of Apprentice to Journeyperson: 1 to 1, 1 to 6)

Timberperson - First Year

Effective Period: 7/1/2016 - 6/30/2017
Wage Rate Per Hour: 40% of Journeyperson's rate
Supplemental Rate Per Hour: $32.33

Timberperson - Second Year

Effective Period: 7/1/2016 - 6/30/2017
Wage Rate Per Hour: 50% of Journeyperson's rate
Supplemental Rate Per Hour: $32.33

Timberperson - Third Year

Effective Period: 7/1/2016 - 6/30/2017
Wage Rate Per Hour: 65% of Journeyperson's rate
Supplemental Rate Per Hour: $32.33

Timberperson - Fourth Year

Effective Period: 7/1/2016 - 6/30/2017
Wage Rate Per Hour: 80% of Journeyperson's rate
Supplemental Rate Per Hour: $32.33

(Local #1536)

NYC ADMINISTRATIVE CODE § 6-109 SCHEDULE OF "LIVING WAGES"

Contractors who provide the following services to the City of New York must post a copy of this Living Wage Schedule at their work site(s) as required by New York City Administrative Code § 6-109:

- **Building Services,**
- **Day Care Services,**
- **Food Services,**
- **Head Start Services,**
- **Homecare Services,**
- **Services to Persons with Cerebral Palsy, and**
- **Temporary Services.**

In accordance with NYC Administrative Code § 6-109, the Comptroller of the City of New York promulgated this schedule of living wages for the above services on contracts for non-emergency work in excess of the small purchase limit set by the Procurement Policy Board; contracting agencies must annex this schedule to such contracts.

This schedule is a compilation of separate determinations of the prevailing rate of wage and supplements made by the Comptroller for each trade classification listed herein pursuant to New York City Administrative Code section 6-109. The source of the wage and supplement rates, whether a collective bargaining agreement, survey data or other, is listed at the end of each classification.

A city service contractor or subcontractor that provides homecare services, day care services, head start services or services to persons with cerebral palsy must pay its covered employees that directly render such services in performance of the city service contract or subcontract no less than the living wage and must provide its employees health benefits (supplemental benefits) or must supplement their hourly wage rate by an amount no less than the health benefits supplement rate. This requirement applies for each hour that the employee works performing the city service contract or subcontract.

A city service contractor or subcontractor that provides building services, food services or temporary services must pay its employees that are engaged in performing the city service contract or subcontract no less than the living wage or the prevailing wage, whichever is greater. Where the living wage is greater than the prevailing wage, the city service contractor or subcontractor must either provide its employees health benefits or must supplement their hourly wage rate by an amount no less than the health benefits supplement rate. Where the prevailing wage is greater than the living wage, the city service contractor or subcontractor must provide its employees the prevailing wage and supplements. These requirements apply for each hour that the employee works performing the city service contract or subcontract.

The appropriate schedule of living wages must be posted at all work sites pursuant to NYC Administrative Code 6-109.

The schedule is applicable for work performed during the effective period, unless otherwise noted. You will be notified of any changes to this schedule by addenda published on our web site www.comptroller.nyc.gov. Schedules for future one-year periods will be published annually in the City Record on or about July 1st of each succeeding year and on our web site www.comptroller.nyc.gov.

The living wage rate and the health benefit supplement rate are known through June 30 of each year and those rates are listed in this schedule.

The living wage rates listed in this schedule may not include all hourly wage calculations for overtime, shift differential, Holiday, Saturday, Sunday or other premium time work. Similarly, this schedule does not set forth every living wage practice with which employers must comply.

Some of the rates in this schedule are based on collective bargaining agreements. These agreements are available for inspection by appointment. Requests for appointments may be made by calling (212) 669-4443, Monday through Friday between the hours of 9 a.m. and 5 p.m.

Answers to questions concerning prevailing wage practices may be obtained from the Classification Unit by calling (212) 669-7974. Please direct all other compliance issues to; Bureau of Labor Law, Attn: Wasyl Kinach, P.E., Office of the Comptroller, 1 Centre Street, Room 1122, New York, N.Y. 10007; Fax (212) 669-4002.

Contractors are solely responsible for maintaining original payroll records, which delineate, among other things, the hours each employee worked within a given classification. Contractors using rates and/or classifications not promulgated by the Comptroller do so at their own risk. Additionally, prior to bid, an agency's chief contracting officer must contact the Bureau of Labor Law to obtain a wage determination for a work classification not published in this schedule.

The information listed below is intended to assist you in meeting your living wage and prevailing wage obligation. Contractors are advised to review the Comptroller's Living Wage Schedule prior to submitting a bid for City work. Any wage rate error made by the contracting agency in the contract documents will not preclude a finding against the contractor for an underpayment of the applicable living wage or the applicable prevailing wage.

This schedule sets forth the living wage and benefit rates required to be annexed to and form part of the contract specifications for work covered by New York City Administrative Code § 6-109. Contractors performing such work are required to pay not less that the rates specified in this schedule for the applicable trade or occupation.

Benefits are paid for *EACH HOUR WORKED* unless otherwise noted.

Wasyl Kinach, P.E.
Director of Classifications
Bureau of Labor Law

TABLE OF CONTENTS

CLASSIFICATION	PAGE
BUILDING CLEANER AND MAINTAINER (OFFICE)	4
BUILDING CLEANER AND MAINTAINER (RESIDENTIAL)	4
CLEANER (PARKING GARAGE)	4
DAY CARE SERVICES	4
FOOD SERVICE EMPLOYEES	4
HEAD START SERVICES	5
HOMECARE SERVICES	6
LANDSCAPING AND GROUNDSKEEPING WORKER	6
SECURITY GUARD (ARMED)	6
SECURITY GUARD (UNARMED)	6
SERVICES TO PERSONS WITH CEREBRAL PALSY	7
TEMPORARY OFFICE SERVICES	7
WINDOW CLEANER	8

BUILDING CLEANER AND MAINTAINER (OFFICE)

For the above building service classification, see the Labor Law Section 230 Schedule.

BUILDING CLEANER AND MAINTAINER (RESIDENTIAL)

For the above building service classification, see the Labor Law Section 230 Schedule.

CLEANER (PARKING GARAGE)

For the above building service classification, see the Labor Law Section 230 Schedule.

DAY CARE SERVICES

Day Care Services

'Day Care Services' means provision of day care services through the city's center-based day care program administered under contract with the city's Administration for Children's Services. No other day care programs shall be covered, including family-based day care programs administered by city-contracted day care centers.

Effective Period: 7/1/2016 - 6/30/2017
Wage Rate per Hour: $10.00
Supplemental Benefit Rate per Hour: $1.50

(NYC Administrative Code §6-109)

FOOD SERVICE EMPLOYEES

Cook

Effective Period: 7/1/2016 - 6/30/2017
Wage Rate per Hour: $16.81
Supplemental Benefit Rate per Hour: $1.75

Cafeteria Attendant

Effective Period: 7/1/2016 - 6/30/2017
Wage Rate per Hour: $12.81
Supplemental Benefit Rate per Hour: $1.75

Counter Attendant

Effective Period: 7/1/2016 - 6/30/2017
Wage Rate per Hour: $12.24
Supplemental Benefit Rate per Hour: $1.75

Kitchen Helper / Dishwasher

Effective Period: 7/1/2016 - 6/30/2017
Wage Rate per Hour: $11.94
Supplemental Benefit Rate per Hour: $1.75

Overtime

Time and one half the regular hourly rate after 40 hours in any work week.

(Based on data from NYS Department of Labor Occupational Employment Statistics and US Department of Labor Bureau of Labor Statistics)

HEAD START SERVICES

Head Start Services

'Head Start Services' means provision of head start services through the city's center-based head start program administered under contract with the city's Administration for Children's Services. No other head start programs shall be covered.

Effective Period: 7/1/2016 - 6/30/2017
Wage Rate per Hour: $10.00
Supplemental Benefit Rate per Hour: $1.50

(NYC Administrative Code §6-109)

HOMECARE SERVICES

Home Care Services

'Homecare Services' means the provision of homecare services under the city's Medicaid Personal Care/Home Attendant or Housekeeping Programs, including but not limited to the In-Home Services for the Elderly Programs administered by the Department for the Aging.
For homecare services provided under the Personal Care Services program, the wage and supplemental benefit rate above shall apply only as long as the state and federal government maintain their combined aggregate proportionate share of funding and approved rates for homecare services in effect as of the date of the enactment of this section.
For contractors or subcontractors providing homecare services, the supplemental benefit rate may be waived by the terms of a bona fide collective bargaining agreement with respect to employees who have never worked a minimum of eighty (80) hours per month for two consecutive months for that covered employer, but such provision may not be waived for any employee once a minimum of eighty (80) hours for two consecutive months has been achieved.

Effective Period: 7/1/2016 - 6/30/2017
Wage Rate per Hour: $10.00
Supplemental Benefit Rate per Hour: $1.50

(NYC Administrative Code §6-109)

LANDSCAPING AND GROUNDSKEEPING WORKER

For the above building service classification, see the Labor Law Section 230 Schedule.

SECURITY GUARD (ARMED)

For the above building service classification, see the Labor Law Section 230 Schedule.

SECURITY GUARD (UNARMED)

For the above building service classification, see the Labor Law Section 230 Schedule.

SERVICES TO PERSONS WITH CEREBRAL PALSY

Services To Person With Cerebral Palsy

'Services to Persons with Cerebral Palsy' means provision of services which enable persons with cerebral palsy and related disabilities to lead independent and productive lives through an agency that provides health care, education, employment, housing and technology resources to such persons under contract with the city or the department of education.

Effective Period: 7/1/2016 - 6/30/2017
Wage Rate per Hour: $10.00
Supplemental Benefit Rate per Hour: $1.50

(NYC Administrative Code §6-109)

TEMPORARY OFFICE SERVICES

Administrative Assistant

Effective Period: 7/1/2016 - 6/30/2017
Wage Rate per Hour: $34.97
Supplemental Benefit Rate per Hour: None

Cashier

Effective Period: 7/1/2016 - 6/30/2017
Wage Rate per Hour: $11.50
Supplemental Benefit Rate per Hour: None

Clerk (various)

Effective Period: 7/1/2016 - 6/30/2017
Wage Rate per Hour: $16.07
Supplemental Benefit Rate per Hour: None

Computer Assistant

Effective Period: 7/1/2016 - 6/30/2017
Wage Rate per Hour: $19.07
Supplemental Benefit Rate per Hour: None

Data Entry Operator

Effective Period: 7/1/2016 - 6/30/2017
Wage Rate per Hour: $16.70
Supplemental Benefit Rate per Hour: None

Receptionist

Effective Period: 7/1/2016 - 6/30/2017
Wage Rate per Hour: $15.78
Supplemental Benefit Rate per Hour: None

Secretary (various)

Effective Period: 7/1/2016 - 6/30/2017
Wage Rate per Hour: $20.22
Supplemental Benefit Rate per Hour: None

Word Processor

Effective Period: 7/1/2016 - 6/30/2017
Wage Rate per Hour: $20.32
Supplemental Benefit Rate per Hour: None

Overtime

Time and one half the regular hourly rate after 40 hours in any work week.

(Based on data from NYS Department of Labor Occupational Employment Statistics and US Department of Labor Bureau of Labor Statistics or NYC Administrative Code §6-109)

WINDOW CLEANER

For the above building service classification, see the Labor Law Section 230 Schedule.

Leonard A. Mancusi
SENIOR ASSISTANT COMPTROLLER

THE CITY OF NEW YORK
OFFICE OF THE COMPTROLLER
1 CENTRE STREET ROOM 1120
NEW YORK, N.Y. 10007-2341

ALAN G. HEVESI
COMPTROLLER

TELEPHONE: (212) 669-3622
FAX NUMBER: (212) 669-8499

MEMORANDUM

November 6, 2000

To Agency Chief Contracting Officers

From: Leonard A. Mancusi

Re: Security at Construction Sites

Prior to the enactment of Administrative Code §6-109, security guards on construction sites were not subject to prevailing wages. Security guards under the New York State labor law are covered under §230 which provides that prevailing wages are to be paid for security guards in existing buildings. §6-109 of the Administrative Code which was enacted in 1996 closed this loophole by including all security guards working pursuant to a city contract as a prevailing wage trade.

Although some construction contract boilerplate language has been amended to include §6-109, sub-contractors performing security services have advised us that they were not aware of this provision and, since traditionally, security guards were not a covered trade on construction sites, and they were not advised by a prime contractor that they would have to pay prevailing wages, they have not been doing so.

To avoid the possibility of issuing stop payments against prime contractors for the failure of their security service sub-contractors to pay

prevailing wages, we suggest that you write to all your existing security guard sub-contractors and their primes and in the future, upon approval of a security guard sub-contractor, advise the contractors of their obligation to pay prevailing wages under §6-109 of the Administrative Code.

As always, your cooperation is appreciated.

LAM:er
ACCO.SECURITY AT SITES

Department of Design and Construction

INFRASTRUCTURE DIVISION
BUREAU OF DESIGN

VOLUME 2 OF 3

_____

Contractor

_____

Dated_____, **20**___

_____

APPROVED AS TO FORM
CERTIFIED AS TO LEGAL AUTHORITY

_____

Acting Corporation Counsel

_____

Dated_____, **20**___

_____

Department of Design and Construction

INFRASTRUCTURE DIVISION
BUREAU OF DESIGN

VOLUME 2 OF 3

PROJECT ID: BED798

REPLACEMENT OF TRUNK AND DISTRIBUTION WATER MAINS, COMBINED SEWER AND APPURTENANCES IN FLATBUSH AVENUE BETWEEN STERLING PLACE AND 8TH AVENUE, ETC.

INCLUDING SEWER, WATER MAIN, 8TH AVENUE TRIANGLE STREETSCAPE, NECKDOWNS, STREET LIGHTING, AND TRAFFIC SIGNAL WORK

Together with All Work Incidental Thereto
BOROUGH OF BROOKLYN
CITY OF NEW YORK

Triumph Construction Corp.
Contractor

Dated June 07, 20 17

APPROVED AS TO FORM
CERTIFIED AS TO LEGAL AUTHORITY

Acting Corporation Counsel

JP
1-23-17

Dated January 23, 20 17

Department of Design and Construction

THE CITY OF NEW YORK
DEPARTMENT OF DESIGN AND CONSTRUCTION
DIVISION OF INFRASTRUCTURE

30-30 THOMSON AVENUE
LONG ISLAND CITY, NEW YORK 11101-3045
TELEPHONE (718) 391-1000
WEBSITE www1.nyc.gov/site/ddc/index.page

VOLUME 3 OF 3

SCHEDULE A
SPECIFICATIONS AND
REVISIONS TO STANDARD SPECIFICATIONS

FOR FURNISHING ALL LABOR AND MATERIALS NECESSARY AND REQUIRED FOR:

PROJECT ID: BED798

REPLACEMENT OF TRUNK AND DISTRIBUTION WATER MAINS, COMBINED SEWER AND APPURTENANCES IN FLATBUSH AVENUE BETWEEN STERLING PLACE AND 8TH AVENUE, ETC.

INCLUDING SEWER, WATER MAIN, 8TH AVENUE TRIANGLE STREETSCAPE, NECKDOWNS, STREET LIGHTING, AND TRAFFIC SIGNAL WORK

Together with All Work Incidental Thereto
BOROUGH OF BROOKLYN
CITY OF NEW YORK

FOR THE DEPARTMENT OF ENVIRONMENTAL PROTECTION
PREPARED BY
IN-HOUSE DESIGN

DECEMBER 28, 2016

17-079

SPECIFICATIONS AND STANDARDS OF NEW YORK CITY

The following New York City Department of Transportation (NYCDOT) reference documents are available on-line at: http://www1.nyc.gov/site/ddc/resources/publications.page or for purchase between 9:00 A.M. and 3:00 P.M. at 55 Water St., Ground Floor, NYC, N.Y. 10041. Contact: Ms Vivian Valdez, Tel. (212) 839-9434

1. NYCDOT Standard Highway Specifications, August 1, 2015
2. NYCDOT Standard Highway Details of Construction, July 1, 2010
3. NYCDOT Division of Street Lighting Specifications
4. NYCDOT Division of Street Lighting Standard Drawings
5. NYCDOT Standard Specifications for Traffic Signals
6. NYCDOT Standard Drawings for Traffic Signals

The following reference documents for New York City Department of Environmental Protection (NYCDEP) are available on-line at: http://www1.nyc.gov/site/ddc/resources/publications.page or for pick up between 8:00 A.M. and 4:00 P.M. at 30-30 Thomson Avenue, 3rd Floor, Division of Infrastructure, Long Island City, N.Y. 11101.
Contact: Mr. Nader Soliman, Tel. (718) 391-1179

1. NYCDEP Standard Sewer and Water Main Specifications, July 1, 2014
2. NYCDEP Instructions for Concrete Specifications, Jan. 92
3. NYCDEP General Specification 11-Concrete, November 1991
4. NYCDEP Sewer Design Standards, (September 2007) Revised January 2009

The following reference documents for New York City Department of Environmental Protection (NYCDEP) are available on-line at: http://www1.nyc.gov/site/ddc/resources/publications.page or for pick up between 8:00 A.M. and 4:00 P.M. at 30-30 Thomson Avenue, 3rd Floor, Division of Infrastructure, Long Island City, N.Y. 11101.
Contact: Mr. Robert Kuhlmann, Tel. (718) 391-2145

1. NYCDEP Water Main Standard Drawings, November 2010
2. Specifications for Trunk Main Work, July 2014
3. Standard Design and Guidelines for Green Infrastructure Practices, latest version, available only on-line at: http://www.nyc.gov/html/dep/html/stormwater/green_infrastructure_standards.shtml

Water main work material specifications are available at the Department of Environmental Protection, 59-17 Junction Boulevard, 3rd Floor Low-Rise Building, Flushing, N.Y. 11373-5108.
Contact: Mr. Tarlock Sahansra, P.E., Tel. (718) 595-5302
E-mail: TSAHANSRA@DEP.NYC.GOV

Standard Specifications and Drawings for New York City Fire Department Communications facilities of New York City are available from the FDNY Facilities Management Bureau, Plant Operations Engineering, 316 Sgt. Beers Avenue Cluster 1 Box 16, Fort Totten, N.Y. 11359.
Contact: Mr. Ed Durkin, Tel. (718) 281-3933

Tree Planting Standards of the City of New York Parks & Recreation are available at the following Department of Parks & Recreation website: http://www.nycgovparks.org/pagefiles/53/Tree-Planting-Standards.pdf

SPECIFICATIONS AND STANDARDS OF PRIVATE UTILITIES

The Following reference document for Private Utility Work is available for pick up between 8:30 A.M. and 4:00 P.M. at 30-30 Thomson Avenue, First Floor Bid Procurement Room, L.I.C., N.Y. 11101.

1. CET SPECIFICATIONS AND SKETCHES dated November 2010

PROJECT ID: BED798

VOLUME 3 OF 3

TABLE OF CONTENTS

SECTION	DESCRIPTION	PAGES
SPECIFICATIONS	AND STANDARDS OF NEW YORK CITY	1 OF 2 AND 2 OF 2
SCHEDULE A	GENERAL CONDITIONS TO CONSTRUCTION CONTRACT	SA-1 to SA-11
R - PAGES	REVISIONS TO THE NEW YORK CITY DEPARTMENT OF TRANSPORTATION STANDARD HIGHWAY SPECIFICATIONS	R-1 to R-60
I - PAGES	NEW SECTIONS	I-1 to I- 18
SW - PAGES	SEWER AND WATER MAIN SPECIFICATIONS	SW-1 to SW-12
EP7 – PAGES	GAS COST SHARING (EP-7) STANDARD SPECIFICATIONS	EP7-1 to EP7-28A3
HAZ – PAGES	SPECIFICATIONS FOR HANDLING TRANSPORTATION AND DISPOSAL OF NONHAZARDOUS AND POTENTIALLY HAZARDOUS CONTAMINATED MATERIALS	HAZ-1 TO HAZ-262
ASB – PAGES	SPECIFICATIONS FOR ABATEMENT OF TRANSIT AUTHORITY DUCT INSULATION ASBESTOS CONTAINING MATERIALS	ASB-1 to ASB-45
UI - PAGES	UTILITY INTERFERENCES SECTION	UI-1 to UI-78

(NO TEXT ON THIS PAGE)

SCHEDULE "A"

(GENERAL CONDITIONS TO CONSTRUCTION CONTRACT)
(INCLUDING GENERAL CONDITIONS RELATED TO ARTICLE 22 - INSURANCE)

PART I. REQUIRED INFORMATION

INFORMATION FOR BIDDERS SECTION 26 **BID SECURITY** The **Contractor** shall obtain a bid security in the amount indicated to the right.	Required provided the TOTAL BID PRICE set forth on the Bid Form is $1,000,000 or more. Certified Check: 2% of Bid Amount or Bond: 10% of Bid Amount
INFORMATION FOR BIDDERS SECTION 26 **PERFORMANCE AND PAYMENT BONDS** The **Contractor** shall obtain performance and payment bonds in the amount indicated to the right.	Required for contracts in the amount of $1,000,000 or more. Performance Security and Payment Security shall each be in an amount equal to 100% of the Contract Price.
CONTRACT ARTICLE 14. **DATE FOR SUBSTANTIAL COMPLETION** The **Contractor** shall substantially complete the **Work** in the number of calendar days indicated to the right.	See Page SA-4
CONTRACT ARTICLE 15. **LIQUIDATED DAMAGES** If the **Contractor** fails to substantially complete the **Work** within the time fixed for substantial completion plus authorized time extensions or if the **Contractor**, in the sole determination of the **Commissioner**, has abandoned the **Work**, the **Contractor** shall pay to the **City** the amount indicated to the right.	For Each Consecutive Calendar Day Over Completion Time Specified On Each Issued Task Order: $7000.00
CONTRACT ARTICLE 17. **SUB-CONTRACTOR** The **Contractor** shall not make subcontracts totaling an amount more than the percentage of the total **Contract** price indicated to the right.	Not to Exceed 35% of the **Contract** Price
CONTRACT ARTICLE 21. **RETAINAGE** The **Commissioner** shall deduct and retain until the substantial completion of the **Work** the percent value of the **Work** indicated to the right.	5% of the Value of the **Work**
CONTRACT ARTICLE 22. **(Per Directions Indicated To The Right)**	See pages SA-5 through SA-9

CONTRACT ARTICLE 24. **DEPOSIT GUARANTEE** As security for the faithful performance of its obligations, the **Contractor**, upon filing its requisition for payment on **Substantial Completion**, shall deposit with the **Commissioner** a sum equal to the percentage of the **Contract** price indicated to the right.	1% of **Contract** Price
CONTRACT ARTICLE 24. **PERIOD OF GUARANTEE** Periods of maintenance and guarantee other than the period set forth in **Article 24.1** are indicated to the right.	Eighteen (18) Months, excluding Trees Twenty-Four (24) Months for Tree Planting
CONTRACT ARTICLE 74. **STATEMENT OF WORK** The **Contractor** shall furnish all labor and materials and perform all **Work** in strict accordance with the **Contract Drawings**, **Specifications,** and all **Addenda** thereto.	See **Contract Article 74**
CONTRACT ARTICLE 75. **COMPENSATION TO BE PAID TO CONTRACTOR** The **City** shall pay and the **Contractor** shall accept in full consideration for the performance of the **Contract**, subject to additions and deductions as provided in **Contract Article 75**, this said sum being the amount at which the **Contract** was awarded to the **Contractor** at a public letting thereof, based upon the **Contractor's** bid for the **Contract.**	See **Contract Article 75**
CONTRACT ARTICLE 78. **PARTICIPATION BY MINORITY-OWNED AND WOMEN-OWNED BUSINESS ENTERPRISES IN CITY PROCUREMENT**	See M/WBE Utilization Plan in the Bid Booklet

STANDARD HIGHWAY SPECIFICATIONS SECTION 6.40 LIQUIDATED DAMAGES FOR ENGINEER'S FIELD OFFICE If the Contractor fails to satisfactorily provide the field office and all equipment specified in **Section 6.40 - Engineer's Field Office**, and/or if a cited deficiency exceed seventy-two (72) hours after notice from the Engineer in writing, or is permitted to recur, liquidated damages will be assessed in the amount specified herein for each subsequent calendar day or part thereof that a cited deficiency resulting in nonpayment, as described in **Section 6.40.5**, is not corrected.	For Each Calendar Day of Deficiency: $500.00
STANDARD HIGHWAY SPECIFICATIONS SECTION 6.70 LIQUIDATED DAMAGES FOR MAINTENANCE AND PROTECTION OF TRAFFIC	For each instance of failure to comply with the Maintenance and Protection of Traffic requirements within three (3) hours after written notice from the Engineer: $250.00 For each and every hour of failing to open the entire width of roadway to traffic the morning following a night/weekend work operation: $500.00
STANDARD HIGHWAY SPECIFICATIONS SECTION 7.13 LIQUIDATED DAMAGES FOR MAINTENANCE OF SITE If the Contractor fails to comply, within three (3) consecutive hours after written notice from the Engineer, with the requirements of **Section 7.13 - Maintenance of Site**, the Contractor shall pay to the City of New York, until such notice has been complied with or rescinded, the sum specified above per calendar day, for each instance of such failure, as liquidated damages and not as a penalty, for such default.	For Each Calendar Day, for Each Occurrence: $1400.00

Date for Substantial Completion (Reference: Article 14)

The Contractor shall substantially complete the Work within the Final Contract Duration determined in accordance with the terms and conditions set forth herein.

The Base Contract Duration for this project is 1275 consecutive calendar days ("ccds").

The Final Contract Duration shall be the Base Contract Duration when a check mark is indicated before the word "NO", below, and shall be the Base Contract Duration adjusted by the table set forth below when a check mark is indicated before the word "YES", below.

√ YES _____ NO

When the Final Contract Duration is indicated above to be adjusted by the table below, the table may increase the Base Contract Duration depending on the date of scheduled substantial completion to avoid a scheduled substantial completion of the Work during the winter months. The date of the scheduled substantial completion shall be determined by adding the Base Contract Duration to the date specified to commence work in the written Notice To Proceed. The Final Contract Duration shall then be determined as follows:

(a) Find the row that corresponds to the month of the substantial completion based on the Base Contract Duration added to the date specified to commence work in the written Notice To Proceed.
(b) Find the number of days to be added to the Base Contract Duration in the table below. Add that number of days to the Base Contract Duration to obtain the Final Contract Duration in consecutive calendar days.

Month Of Substantial Completion Based On The Base Contract Duration	Number Of Days Of Adjustment
January	150
February	120
March	90
April	60
May	30
June	0
July	0
August	0
September	0
October	0
November - December 15	0
December 16 - December 31	180

In addition, should Item No. 9.30 - STORM WATER POLLUTION PREVENTION exist in the Contract and the required Storm Water Pollution Prevention Plan (SWPPP) does not conform to NYSDEC's recommended Standards, an additional 60-ccds shall be added to the above Final Contract Duration.

(GENERAL CONDITIONS RELATING TO ARTICLE 22 - INSURANCE)

PART II. TYPES OF INSURANCE, MINIMUM LIMITS AND SPECIAL CONDITIONS

Note: All certificate(s) of insurance submitted pursuant to Contract Article 22.3.3 must be accompanied by a Certification by Broker consistent with Part III below and include the following information:

- **For each insurance policy, the name and NAIC number of issuing company, number of policy, and effective dates;**
- **Policy limits consistent with the requirements listed below;**
- **Additional insureds or loss payees consistent with the requirements listed below; and**
- **The number assigned to the Contract by the City (in the "Description of Operations" field).**

Insurance indicated by a blackened box (■) or by an X in a box (☒) to left will be required under this contract

TYPES OF INSURANCE (per Article 22 in its entirety, including listed paragraph)	MINIMUM LIMITS AND SPECIAL CONDITIONS
■ Commercial General Liability Art. 22.1.1	The minimum limits shall be $3,000,000 per Occurrence and $6,000,000 per Project Aggregate applicable to this **Contract.** Additional Insureds: (1) City of New York, including its officials and employees, with coverage at least as broad as ISO Form CG 20 10 and CG 20 37. (2) All person(s) or organization(s), if any, that Article 22.1.1(b) of the **Contract** requires to be named as Additional Insured(s), with coverage at least as broad as ISO Form CG 20 26. The Additional Insured endorsement shall either specify the entity's name, if known, or the entity's title (e.g., Project Manager). (3) Consolidated Edison Company Of New York (4)

■ Workers' Compensation ■ Disability Benefits Insurance ■ Employers' Liability ☐ Jones Act ☐ U.S. Longshoremen's and Harbor Workers Compensation Act	Art. 22.1.2 Art. 22.1.2 Art. 22.1.2 Art. 22.1.3 Art. 22.1.3	Workers' Compensation, Employers' Liability, and Disability Benefits Insurance: Statutory per New York State law without regard to jurisdiction. **Note:** The following forms are acceptable: (1) New York State Workers' Compensation Board Form No. C-105.2, (2) State Insurance Fund Form No. U-26.3, (3) New York State Workers' Compensation Board Form No. DB-120.1 and (4) Request for WC/DB Exemption Form No. CE-200. The City will not accept an ACORD form as proof of Workers' Compensation or Disability Insurance. Jones Act and U.S. Longshoremen's and Harbor Workers' Compensation Act: Statutory per U.S. Law. ☐ Additional Requirements: (1) (2)
☐ Builders' Risk	Art. 22.1.4	100% of Total Value of **Work** **Contractor** the Named Insured; the **City** both an Additional Insured and one of the loss payees as its interests may appear. If the **Work** does not involve construction of a new building or gut renovation work, the **Contractor** may provide an installation floater in lieu of Builders Risk insurance. Note: Builders Risk Insurance may terminate upon **Substantial Completion** of the **Work** in its entirety.
■ Commercial Auto Liability	Art. 22.1.5	$2,000,000 per accident combined single limit If vehicles are used for transporting hazardous materials, the **Contractor** shall provide pollution liability broadened coverage for covered vehicles (endorsement CA 99 48) as well as proof of MCS 90. Additional Insureds: (1) City of New York, including its officials and employees. (2) (3)

☐ Contractors Pollution Liability	Art. 22.1.6	$_____ per occurrence $_____ aggregate Additional Insureds: (1) City of New York, including its officials and employees. (2) (3)
☐ Marine Protection and Indemnity	Art. 22.1.7(a)	$_____ each occurrence $_____ aggregate Additional Insureds: (1) City of New York, including its officials and employees. (2) (3)
☐ Hull and Machinery Insurance	Art. 22.1.7(b)	$_____ per occurrence $_____ aggregate Additional Insureds: (1) City of New York, including its officials and employees. (2) (3)
☐ Marine Pollution Liability	Art. 22.1.7(c)	$_____ per occurrence $_____ aggregate Additional Insureds: (1) City of New York, including its officials and employees. (2) (3)

[OTHER] Art. 22.1.8 ■ Railroad Protection Liability Policy (ISO-RIMA or equivalent form) approved by Permittor covering the work to be performed at the designated site and affording protection for damages arising out of bodily injury or death, physical damage to or destruction of property, including damage to the Insured's own property and conforming to the following: • Policy Endorsement CG 28 31 - Pollution Exclusion Amendment is required to be endorsed onto the policy when environmental-related work and/or exposures exist. • Indicate the Name and address of the Contractor to perform the work, the Contract Number and the name of the railroad property where the work is being performed and the Agency Permit. • Evidence of Railroad Protective Liability Insurance, must be provided in the form of the Original Policy. A detailed Insurance Binder (ACORD or Manuscript Form) will be accepted pending issuance of the Original Policy, which must be provided within thirty (30) days of the Binder Approval.	$2,000,000 per occurrence $6,000,000 annual aggregate Named Insureds: (1) New York City Transit Authority (NYCTA), the Manhattan and Bronx Surface Transit Operation Authority (MaBSTOA), the Staten Island Rapid Transit Operation Authority (SIRTOA), MTA Capital Construction Co., the Metropolitan Transportation Authority (MTA) including its subsidiaries and affiliates, and the City of New York (as Owner) and all other indemnified parties. (2)

[OTHER] Art. 22.1.8

■ Professional Liability

A. The Contractor's Professional Engineer shall maintain and submit evidence of Professional Liability Insurance in the minimum amount of $1,000,000 per claim. The policy or policies shall include an endorsement to cover the liability assumed by the Contractor under this Contract arising out of the negligent performance of professional services or caused by an error, omission or negligent act of the Contractor's Professional Engineer or anyone employed by the Contractor's Professional Engineer.

B. Claims-made policies will be accepted for Professional Liability Insurance. All such policies shall have an extended reporting period option or automatic coverage of not less than two (2) years. If available as an option, the Contractor's Professional Engineer shall purchase extended reporting period coverage effective on cancellation or termination of such insurance unless a new policy is secured with a retroactive date, including at least the last policy year.

[OTHER] Art. 22.1.8 ■ Engineer's Field Office **Section 6.40, Standard Highway Specifications**	Fire insurance, extended coverage and vandalism, malicious mischief and burglary, and theft insurance coverage in the amount of $40,000

[OTHER] Art. 22.1.8

☐ The Following Additional Insurance Must Be Provided:

Umbrella/Excess Liability Insurance - The Contractor shall provide Umbrella/Excess Liability Insurance in the minimum amount of $10,000,000 per Occurrence and $10,000,000 in Aggregate. The policy terms and condition should be at least as broad as the underlying policies. The underlying policies should comply with the insurance provision as outlined by the contract. Defense cost should be in addition to the limit of liability. The City of New York, including its officials and employees, should be included as additional insured as respects to the noted project.

SCHEDULE A
(GENERAL CONDITIONS TO CONSTRUCTION CONTRACT)
(GENERAL CONDITIONS RELATING TO ARTICLE 22 – INSURANCE)

PART III. CERTIFICATES OF INSURANCE

All certificates of insurance (except certificates of insurance solely evidencing Workers' Compensation Insurance, Employer's Liability Insurance, and/or Disability Benefits Insurance) must be accompanied by one of the following:

(1) the Certification by Insurance Broker or Agent on the following page setting forth the required information and signatures;

-- OR --

(2) copies of all policies as certified by an authorized representative of the issuing insurance carrier that are referenced in such certificate of insurance. If any policy is not available at the time of submission, certified binders may be submitted until such time as the policy is available, at which time a certified copy of the policy shall be submitted.

CERTIFICATION BY INSURANCE BROKER OR AGENT

The undersigned insurance broker represents to the City of New York that the attached Certificate of Insurance is accurate in all material respects.

_____
[Name Of Broker or Agent (Typewritten)]

_____
[Address Of Broker or Agent (Typewritten)]

_____
[E-Mail Address Of Broker or Agent (Typewritten)]

_____
[Phone Number/Fax Number Of Broker or Agent (Typewritten)]

_____
[Signature Of Authorized Official, Broker or Agent]

_____
[Name And Title Of Authorized Official, Broker or Agent (Typewritten)]

State of .....)
) ss.:
County of .....)

Sworn to before me this _____ day of _____, 20__

_____
NOTARY PUBLIC FOR THE STATE OF _____

SCHEDULE "A"

(GENERAL CONDITIONS TO CONSTRUCTION CONTRACT)

PART IV. ADDRESS OF COMMISSIONER

Wherever reference is made in Article 7 or Article 22 to documents to be sent to the **Commissioner** (e.g., notices, filings, or submissions), such documents shall be sent to the address set forth below or, in the absence of such address, to the **Commissioner's** address as provided elsewhere in this **Contract**.

DDC Director, Insurance Risk Manager

30 - 30 Thomson Avenue, 4th Floor (IDCNY Building)

Long Island City, NY 11101

NO TEXT THIS PAGE

R - PAGES

REVISIONS TO STANDARD SPECIFICATIONS

NOTICE

The Specification Bulletin(s) ("SB(s)") contained in this Section (R-Pages) may consist of revisions to the following Standard Specifications:

- New York City Department of Transportation ("NYC DOT") Standard Highway Specifications, dated 8/1/2015;
- New York City Department of Environmental Protection ("NYC DEP") Standard Sewer and Water Main Specifications, dated 7/1/2014; and
- NYC DEP Specifications for Trunk Main Work, dated 7/2014.

The SB(s) modify and supersede portions of the applicable Standard Specifications. The provisions contained in this Contract's I-Pages, S-Pages and SW-Pages may further modify the applicable Standard Specifications.

The following SB(s) are included as part of this contract:

- SB 16-001 – REVISIONS TO THE NYC DOT STANDARD HIGHWAY SPECIFICATIONS.
- SB 16-002 – REVISIONS TO THE NYC DEP STANDARD SEWER AND WATER MAIN SPECIFICATIONS.
- SB 17-001 – UV CURED-IN-PLACE-PIPE (CIPP) LINING METHOD
- SB 17-002 – RODENT AND WATERBUG PEST CONTROL
- SB 17-003 – ENGINEERS FIELD OFFICE
- SB 17-004 – FIRE DEPARTMENT FACILITIES
- SB 17-005 – DIGITAL PHOTOGRAPHS
- SB 17-006 – RECORDS OF SUBSURFACE STRUCTURES

(NO TEXT ON THIS PAGE)

Department of Design and Construction	**SPECIFICATION BULLETIN**	**SB** 16-001

Title: **REVISIONS TO NYC DOT STANDARD HIGHWAY SPECIFICATIONS**

Prepared:	Approved:
6/29/2016	6/29/2016
Richard Jones, P.E. CWI — Date	Mohsen Zargarelahi, P.E. — Date
Director, Specifications – Infrastructure Design	Assistant Commissioner – Infrastructure Design

APPLICABILITY:

- This Specification Bulletin (SB) is effective for projects advertised on or after 7/11/16.

SUPERSEDENCE:

- This SB supersedes the following SBs: **NONE**

REVISIONS TO THE NEW YORK CITY DEPARTMENT OF TRANSPORTATION STANDARD HIGHWAY SPECIFICATIONS VOLUME 1 OF 2, DATED 8/1/15:

All references contained below are to the New York City Department of Transportation Standard Highway Specifications, Dated August 1, 2015. Said Standard Highway Specifications are hereby revised as follows:

a) Refer to Page 3, Subsection 1.06.3;
Delete the third paragraph;
Substitute the following new paragraph:
"Any doubt as to the meaning of this contract or the specifications thereof, or any obscurity as to the wording of them, or any discrepancy between them, or any discrepancy between figures and drawings will be explained by the Engineer."

b) Refer to Page 5, Subsection 1.06.8;
Delete the words "tentative" wherever it occurs in the last paragraph.

c) Refer to Page 17, Subsection 1.06.23.(G), last paragraph;
Delete the word "asbestos" wherever it occurs.

d) Refer to Page 26, Subsection 1.06.29, line number four (4);
Delete the words and punctuation mark ", and at the prices fixed herein" in its entirety.

e) Refer to Page 41 Subsection 1.06.48.(C), 2nd paragraph, 1st line;
Delete from the first line starting from "have maximum grade of one (1) vertical on three (3) horizontal", in its entirety;
Substitute the following:
"have a maximum grade of one (1) vertical on twelve (12) horizontal, for pedestrian ramp and one (1) vertical on six (6) horizontal, for driveway ramp".

f) Refer to Page 87, Subsection 2.18.3(A), 4th paragraph;
Change "." to "," after "... and Appeals";
Add the following words: "and the health standards of OSHA of the U.S. Department of Labor."

g) Refer to Page 104, Subsection 3.01.3.(C).1.(c), 4th paragraph:
Delete the words "to a maximum of 70%"

h) Refer to Page 120, Subsection 3.05.5.(A), 2nd Table 3.05-V;
Delete the sentence: "Concrete of Type IA, IIA and IIIA shall have an air entrainment of 4 to 7 percent when the coarse aggregate is 1 1/2" stone and 5 to 7 percent when the coarse aggregate is 3/4" stone, with 6.5 percent desired in either case."
Substitute the following:
"Concrete of classes shown in Table 3.05-II shall have an air entrainment of 4 to 7 percent for size 357 coarse aggregate and 5 to 7 percent for size 67 or 57 aggregate, with 6.5 percent desired in either case. If concrete is pumped, air entrainment shall be measured after the pump."

i) Refer to Page 135, Subsection 3.05.9, 4th paragraph;
Add the following words to the end of the 4th paragraph: "Dosing of accelerators and retarders shall be per the manufacturer's published recommendations. Addition of an accelerator or retarder per this subsection will not require a separate mix design, unless requested by the Engineer."

j) Refer to Page 192, Subsection 4.06.12;
Delete the Subsection 4.06.12, in its entirety and substitute the words "4.06.12. (NO TEXT)." The use of rubble aggregate will not be permitted.

k) Refer to Page 282, Subsection 5.02.2.(C), 2nd paragraph;
Add the following words: "6 in x 12 in" after "At least four (4)"

l) Refer to Page 282, Subsection 5.02.2.(C), 2nd paragraph;
Delete the sentence: "Curing boxes shall be furnished in good operating condition, capable of maintaining cylinders under water at a curing temperature of 72°F. ±5°F."
Substitute the following:
"Curing boxes meeting the requirements of ASTM C31 and C511 shall be furnished in good operating condition, and shall maintain cylinders under water at a curing temperature of 73.5°F ±3.5°F. Curing boxes with rusted or corroded interior surfaces shall not be used."

REVISIONS TO THE NEW YORK CITY DEPARTMENT OF TRANSPORTATION STANDARD HIGHWAY SPECIFICATIONS VOLUME 2 OF 2, DATED 8/1/15:

No Changes.

(NO TEXT THIS PAGE)

Department of Design and Construction	**SPECIFICATION BULLETIN**	**SB** 16-002

Title: **REVISIONS TO THE NYC DEP STANDARD SEWER AND WATER MAIN SPECIFICATIONS**

Prepared:	Approved:
10/11/2016	10/11/2016
Richard Jones, P.E. CWI — Date	Mohsen Zargarelahi, P.E. — Date
Director, Specifications – Infrastructure Design	Assistant Commissioner – Infrastructure Design

APPLICABILITY:

- This Specification Bulletin (SB) is effective for projects advertised on or after 11/14/16.

SUPERSEDENCE:

- This SB supersedes the following SBs: **NONE**

ATTACHMENTS:

- **ATTACHMENT 1:** Revised Section 40.05 – SHEETING AND BRACING
  Pages A1-1 through A1-7
- **ATTACHMENT 2:** Revised Section 70.91 – SHEETING
  Pages A2-1 through A2-3

REVISIONS TO THE NEW YORK CITY DEPARTMENT OF ENVIROMENTAL PROTECTION STANDARD SEWER AND WATER MAIN SPECIFICATIONS, DATED 7/1/14:

All references contained below are to the New York City Department of Environmental Protection Standard Sewer and Water Main Specifications, Dated July 1, 2014. Said Standard Sewer and Water Main Specifications are hereby revised as follows:

a) **Refer** to Page III-6, Subsection 30.03.1;
Add the text ", C780 Annex 6" to line (2) after the words "C109".

b) **Refer** to Pages IV-12 through IV-18, Section 40.05 – SHEETING AND BRACING;
Delete in its entirety the Section;
Substitute the revised Section in Attachment 1 (7 pages).

c) **Refer** to Page V-60, Subsection 50.72.5.(A);
Delete in its entirety the Subsection;
Substitute the revised Subsection:

"(A) Cement shall be either Type V cement meeting the requirements of ASTM C150 or blended cement containing 8% microsilica that meets the requirements of NYS Department of Transportation Standard Specification 701-03, Type IP (8)".

d) **Refer** to Page V-65, Subsection 50.72.7.(N);
Delete the second sentence "The test cubes shall be 4"x4"x4"."

e) **Refer** to Page V-66, Subsection 50.72.7.(N);
Delete the text:

Test cubes will be made and stored in accordance with ASTM C31 and tested in accordance with ASTM C39, except as otherwise modified by the Engineer. Each test will consist of three (3) cubes; one (1) to be tested at seven (7) days, the other two (2) at twenty-eight (28) days.

Substitute the revised text:

"Test cores will be made, cured, and tested in accordance with ASTM C42, except as otherwise modified by the Engineer. Test cores will be made from a shotcrete test board, where the shotcrete thickness matches the placed thickness. Each test will consist of three (3) cores; one (1) to be tested at seven (7) days, the other two (2) at twenty-eight (28) days."

f) **Refer** to Pages V-65, V-66, and V-67, Subsections 50.72.7.(N), 50.72.9, and 50.72.10;
Delete the text "Test Cube" wherever it appears;
Substitute the text "Test Core".

g) **Refer** to Page VII-25, Subsection 70.12.5.(B).(2);
Delete the text "and C492";
Substitute the replacement text "or C780 Annex 6"

h) **Refer** to Page VII-29, Subsection 70.13.4;
Add the text " or C780 Annex 6" after the words "C109".

i) **Refer** to Pages VII-48 through VII-51, Section 70.91 – SHEETING;
Delete in its entirety the Section;
Substitute the revised Section in Attachment 2 (3 pages).

SECTION 40.05
SHEETING AND BRACING

40.05.1 SHEETING AND BRACING

(A) The sides of the trenches and excavations shall be supported by adequate sheeting and properly braced. All sheeting and bracing systems the Contractor elects to use or are ordered by the Engineer or the Department shall comply with these specifications and must receive the approvals stated herein. Timber sheeting and bracing shall be vertical sheeting with rangers and braces or horizontal sheeting supported by vertical steel soldier beams and the necessary bracing.

(B) Where the material to be excavated is of such character as to render it necessary, the sheeting shall be tongued and grooved and driven to such depths below the subgrade as may be directed.

(C) Where the nature of the material encountered or the safety of the adjacent structure render it necessary, the Contractor may resort to the use of steel sheet piling with prestressed bracing or the Contractor may underpin the structure or buildings.

(D) Other sheeting systems may be permitted upon approval of the Department of Design and Construction. (Trench Boxes will not be permitted for use in trenches and excavations that exceed twelve (12) feet in depth. (See **Subsection 40.05.4(E)**.))

(E) In general, sheeting and bracing in trenches and excavations shall be designed and installed so that the sheeting shall not be braced or blocked against any part of the new structure, or manholes, or chambers. When conditions warrant, bracing against such structures may be permitted following the approval of drawings prepared and submitted by a Professional Engineer licensed in the State of New York, showing the assumed design loads and stresses, and details of such bracing.

(F) If, in the opinion of the Engineer, any of the approved temporary or permanent supporting structures are inadequate or unsuitable for the actual conditions in the field, the Engineer may direct the Contractor to strengthen the supporting structures at no additional cost to the City. The Contractor shall be responsible for the sufficiency of all temporary and permanent supporting structures whether or not directed by the Engineer to strengthen them.

(G) Unless otherwise specified in the plans or these specifications, the Contractor shall remove all sheeting and bracing throughout this project as per **Subsection 40.05.7**.

40.05.2 SHEETING LEFT IN PLACE

When sheeting is specifically shown on the plans or specifically described in the specifications or specifically ordered in writing by the Engineer to be left in place, it refers to all sheeting and bracing in trench excavations for water main pipe and sewer conduit including manholes, valves and chambers. Excavations for catch basins, basin connections, house services and other excavations not considered part of the trench excavation for water main pipe and sewer conduit shall have their sheeting and bracing removed entirely.

When sheeting is to be left in place, all elements such as rangers and braces, of the sheeting used, must be left in place, except for such temporary braces that require removal in order to make way for the structure. Where it is necessary to remove such temporary braces, the sheeting shall be rebraced in a manner approved by the Engineer; however, in no case shall the sheeting be braced against the side of the structure unless approved in writing by the Engineer. Where lagging and soldier beams are used, the soldier beams and all the rangers and braces shall also be left in place. Where steel sheeting is used, the rangers and braces shall also be left in place.

When sheeting is to be left in place, the Contractor shall cut sheeting at the elevations ordered in writing by the Engineer; however, in general such cutoffs shall not be less than four (4) feet below the final

grade. Timber sheeting shall be cut off by sawing. Steel sheeting or soldier beams shall be cut off by burning. Breaking off of sheeting will not be permitted. The Contractor shall remove from the trench and away from the site of work, to the Contractor's own place of disposal, all cut sheeting and soldier beams together with all rangers, lagging and braces above the ordered elevation of cut. Where the removal of rangers and braces above the ordered elevation of cut is determined by the Engineer to render the sheeting system unstable, rangers and braces shall be placed prior to cutting at a level below the ordered elevation of cut and left in place.

(A) FOR SHEETING OF WATER MAIN TRENCHES AND EXCAVATIONS

Additional payment will be made for sheeting and bracing that is specifically shown on the plans or specifically described in the specifications or ordered in writing by the Engineer, to be left in place in water main trenches and excavations. Payment will be made in accordance with **Section 70.91**.

(B) FOR SHEETING OF SEWER TRENCHES AND EXCAVATIONS

No separate or additional payment will be made for sheeting and bracing that is specifically shown on the plans or specifically described in the specifications to be left in place in sewer trenches and excavations, regardless of the type used nor for the removal from the trench and excavation and the disposal away from the job site of the cut sheeting, bracing and rangers. The cost thereof shall be included in the prices bid for all sewer contract items of work, except when separate payment for sheeting and bracing is provided, in this case the cost shall be included therein. When sheeting is specifically ordered by the Engineer, to be left in place in sewer trenches and excavations, the cost for all labor, materials, cutting, removal, disposal, insurance and work required to leave sheeting in place shall be determine in accordance with **Articles 25 and 26** of the Contract.

40.05.3 MATERIALS

(A) Timber sheeting and bracing shall be of new or acceptable used timber free from injurious defects.

(B) Steel soldier beams shall comply with the requirements of **Section 23.05 - Structural, Reinforcing And Miscellaneous Steel**, except that approved used material will be permitted. Steel sheet piling shall comply with the requirements of **Section 24.01 - Steel Sheeting**, except that approved used materials will be permitted. Timber and lumber for bracing, shoring, fencing, bridging, and decking shall conform to the requirements of **Section 23.06 - Timber And Lumber**. Steel used for sheeting systems or for any other purposes herein shall conform to the requirements of the ASTM A36 and all other applicable requirements of ASTM.

(C) Steel Plates for use as sheeting will be permitted provided that they are properly installed and supported. The use of steel bracing frames which partially support the steel plates will be permitted up to a depth of twelve (12) feet. The use of steel plates in conjunction with trench boxes will not be permitted (trench boxes can not be considered as steel bracing frames).

(D) Steel Sheeting shall conform to the requirements of **Section 24.01** and shall be installed with continuous interlock.

40.05.4 CONSTRUCTION METHODS

(A) GENERAL - Timber sheeting and bracing and other sheeting systems shall be of sufficient dimensions and strength, and steel sheeting shall be of sufficient type, size and weight, to support adequately the sides of the trenches and excavations and insure the safety of adjacent structures and shall be installed in accordance with the approved sheeting details. The Contractor shall be solely responsible for the adequacy and sufficiency of all sheeting and bracing used.

(B) SHEETING - Unless otherwise specified, timber sheeting and bracing shall be driven or placed ahead of the excavation in such a manner as to prevent the loss or slippage of ground in order to

safeguard adjacent surface and subsurface structures. The sheeting shall be driven to adequate depth below subgrade. As the work progresses, any voids back of the sheeting shall be filled and compacted in accordance with **Section 40.06** and as directed by the Engineer.

(C) Sheeting can be used as forms for concrete work. Whenever sheeting is used as formwork as specified or approved by the Engineer only timber sheeting will be permitted unless otherwise approved or specified in writing by the Engineer. When sheeting is used as formwork, an approved protection shall be placed between the sheeting, bracing or soldier beams and the concrete. In addition, when sheeting is used as formwork for any structure or portion thereof, the thickness of that structure or portion of such structure shall be increased be three (3) inches beyond the original neat line of such structure or portion thereof. In no case shall the sheeting, soldier beams or other bracing encroach upon the original neat line of the structure. In such instances when sheeting, soldier beams or other bracing is found to encroach upon the neat line of the structure, the Engineer shall direct the Contractor to remove such sheeting, soldier beams or other braces and redrive and/or replace the sheeting, soldier beams or other braces outside the neat line of the structure. All sheeting used as formwork shall be removed.

(D) All open cuts shall be excavated with vertical sides and properly supported with close sheeting and bracing in conformity with the requirements of **Section 40.03 - Earth Excavation** and with 23 NYCRR - "Protection of Persons Employed in Construction and Demolition Work" and 16 NYCRR Part 753 - "Protection of Underground Facilities" of the State of New York, Department of Labor, Board of Standards and Appeals.

(E) The Contractor is advised that trench boxes will be permitted for use as a sheeting system provided that the depth of trench does not exceed twelve (12) feet. The use of trench boxes to partially sheet trenches that are greater than twelve (12) feet in depth, will be strictly prohibited.

Should trench boxes meeting the above requirements be utilized, the trench will not have to be sheeted completely to subgrade. The trench box will be permitted to "hang up" to a maximum of two (2) feet above subgrade provided that the existing soil in the area of the subgrade can "stand up" on its own without sheeting. Should running ground be encountered or should the soil in the subgrade area begin to slough off, the Contractor will be required to extend the trench box to subgrade. The Engineer shall always maintain the right to order the Contractor to lower the trench box to subgrade as required.

No deductions will be made from any payment for not sheeting the bottom two (2) feet of trench if approved by the Engineer and no additional payment will be made should the Contractor be directed to sheet completely to subgrade.

All sheeting and bracing drawings submitted for approval which indicate trench boxes must be designed for the full depth of trench (to subgrade) and shall show the trench box extending to subgrade.

(F) SLOPED SIDES OF TRENCHES OR EXCAVATIONS - Where the Contractor requests permission not to sheet a trench or excavation, and offers to slope the sides of such trench or excavation in accordance with OSHA Regulations in lieu of such sheeting, the Contractor's request shall be reviewed by the Engineer.

If the Engineer deems such sloping to be acceptable the Engineer shall so notify the Contractor in writing.

Pavement excavation and restoration requirements shall be governed by the width of the trench measured at the bottom of the pavement foundation. Pavement excavation and restoration in excess of those required in connection with standard trench excavation, as specified, shall not be paid for.

In those cases where the Contractor does not request permission to side slope, but the Engineer determines that side sloping is in the best interests of the City, the Engineer shall order the Contractor to proceed using such side sloping. In these cases, the additional pavement excavation and restoration will be paid for at the appropriate bid unit price.

In both of the above cases it shall be presumed that side sloping a trench or excavation is done to obtain a lower cost for the work to be performed. The City shall, therefore, take an appropriate credit to cover the difference in overall costs resulting from the use of side sloping instead of timber sheeting.

(G) SHEETING METHODS

The following methods of sheeting trenches are acceptable:

(a) Vertical Wood Sheeting
(b) Steel Soldier Beams with Horizontal Wood Lagging
(c) Interlocking Steel Sheeting
(d) Trench Boxes for trench depths up to twelve (12) feet
(e) Steel Soldier Beams with Steel Plates continually supported
(f) Steel Frames with Steel Plates for trench depths up to twelve (12) feet
(g) Krings and Icon Type Sheeting Frames and Plates

40.05.5 SHOP DRAWINGS

The Contractor will be required to submit Shop Drawings detailing the sheeting system whenever the depth of cut exceeds five (5) feet.

(A) Before commencing any excavating operation the Contractor shall have approved drawings from the Department of Design and Construction for all types of sheeting and bracing systems, cofferdams, shoring, underpinning, bridging, decking and all other temporary or permanent supporting structures required.

(B) The Contractor shall submit for approval five (5) copies of sheeting and bracing drawings, and other structures (i.e. decking, bridging) drawings that the Contractor proposes to use for the work.

(C) The Contractor shall have these drawings prepared by a Licensed Professional Engineer, currently registered in the State of New York. Such drawings shall be submitted together with design calculations, references, tables and charts. Both drawings and design calculations shall bear the imprint of the Licensed Professional Engineer's seal and signature.

(D) In designing the sheeting stated above, the Contractor's Engineer shall take note of the standard minimum load diagram requirements for Watertight and Non-Watertight sheeting structures. (See Sewer Design Standards.)

(E) The following notes shall be required on all sheeting detail submissions:

(1) If the actual surcharge is in excess of three hundred thirty (330) pounds per square foot the Contractor shall adequately reinforce the sheeting and bracing as required at no additional cost to the City.

(2) Maximum pilot cut shall be five (5) feet.

The sheeting and bracing drawings shall also include but not be limited to the following: the density of the soil, the internal angle of friction of the soil, the stress grade and type of lumber, the allowable steel stresses and the sequence of construction operation where required.

(F) Shop drawings of sheeting, bracing and other structures used by the Contractor shall be signed by and carry the seal of a Professional Engineer licensed in the State of New York. These drawings shall be submitted together with proper design computations bearing the same seal and signature. Shop drawings shall be on sheets twenty-seven (27) inches by forty (40) inches with a one-half (1/2) inch marginal space on three (3) sides and a two (2) inch marginal space for binding on the left side.

Shop drawings shall be numbered consecutively and shall accurately and distinctly present the following:

(1) All working and erection dimensions.
(2) Arrangement and sectional views.
(3) Necessary details, including complete information for making connections between work under this contract and work under other contracts.
(4) Kinds of materials.

(G) Each shop drawing shall be dated and contain:

(1) The name of this project and this contract number.
(2) The description name of classified contract item number or numbers under which it is or they are required.
(3) The locations or points at which the sheeting is to be installed in the work.

(H) All sheeting submissions shall reflect the means and methods chosen by the Contractor and approved by the Engineer. Whenever steel sheeting systems (including trench boxes, frames and plates, etc.) are submitted which would render the crossing of Utilities (i.e. water mains and sewers) impossible the Contractor shall also submit, for approval, a system which can be utilized to permit such crossings (i.e. wood sheeting).

(I) The submission of multiple sheeting systems shall be kept to a minimum. Whenever the Contractor submits multiple systems they must be accompanied with a Location Plan shop drawing to indicate the exact location where these various systems are to be installed. Since the approval of multiple systems will delay the sheeting approval process the Contractor is requested to submit a schedule indicating the time frame that these systems are required. In addition the Contractor will be required to install these multiple systems at the locations indicated on the submitted Location Plan. Should the Contractor request to change the sheeting system at any particular location the Contractor will be required to resubmit the sheeting drawing, for approval, even though the revised sheeting system may have been approved at another location within the project area. The Contractor is reminded that the approval time for any given sheeting system may require up to four (4) weeks.

40.05.6 DESIGN CRITERIA

The following criteria shall be used in calculating the required sheeting, bracing and/or decking systems.

(A) All compression members (struts) shall be designed with a factor of safety of two (2.0). The factor of safety of two (2.0) shall be a value above and beyond the allowable value for compressive stresses for steel as designated in the "AISC Manual of Steel Construction", and for wood as designated in the "National Design Specification for Stress-Grade Lumber and its Fastening". All other allowable stresses (not including compression members) may be increased by thirty-three and one-third (33-1/3) percent where sheeting and bracing is deemed a temporary structure.

(B) A factor of safety shall be used to determine the minimum embedment for sheeting as follows:

Vertical Timber - 15%
Soldier Beams - 20%
Steel Sheeting - 30%

(C) Embedment shall be calculated in accordance with the procedures and standard minimum load diagrams specified herein. The maximum allowable embedment for vertical timber sheeting shall not exceed three feet six inches (3'-6"). The minimum embedment shall be two (2) feet.

(D) The Contractor is advised that the maximum allowable bending stress (F_b) for all timber members shall not exceed one thousand seven hundred fifty (1,750) pounds per square inch. If the Contractor

elects to use a bending stress higher than F_b = 1,750-psi, written certification of bending stress test results shall be submitted to the Engineer prior to use of such material in construction.

(E) Where it is anticipated that heavier crane or equipment loads will fall within the influence line of the trench, design loads shall be increased accordingly.

(F) The Contractor shall compute and include in the Contractor's submission of drawings and calculations the following:

(1) Maximum bending stress
(2) Maximum horizontal shear in wale
(3) Compression perpendicular to grain
(4) Maximum vertical shear stress

(G) DECKING

(1) Unless otherwise specified in the contract documents or approved in writing by the Engineer, the minimum live load on decking shall be AASHTO HS20-44 or Contractor's equipment or heaviest truck loading (i.e. concrete trucks) whichever is greater plus an impact factor of thirty-three (33) percent.

(2) Unless otherwise approved, timber mats shall extend a minimum of three (3) feet from sheeting line on either side of trench.

(3) Unless otherwise approved, a minimum one thousand (1,000) pounds per square foot surcharge load shall be used for sheeting below decking.

(H) Maximum trench widths shown on sheeting details shall not exceed those allowed by the standards or specifications.

(I) The Contractor shall provide an individual cross-sectional sheeting (trench) detail for each size water main pipe and sewer conduit to be constructed unless permission to do otherwise is granted.

(J) Where the water table lies above the subgrade of trench and a well point or deep well dewatering system is not used, the Contractor shall include the effect of hydrostatic loading in calculations for both watertight and non-watertight sheeting.

(K) Sheeting details shall accurately depict actual field operations. The Contractor shall be restricted to a maximum five (5) feet deep pilot cut and all details must reflect this. Additional braces and wales may be required to install sheeting due to the five (5) feet maximum pilot cut restriction. The Contractor shall not assume that additional pilot cut depths will be allowed.

40.05.7 REMOVAL OF SHEETING

All sheeting design and requirements shall be in strict conformance with this section and all appropriate Addenda to the specifications.

Unless otherwise specified in the plans or these specifications, the Contractor shall remove all sheeting and bracing throughout this project.

(A) The sheeting shall be removed in lifts during the backfilling operation in order to permit proper placement and compaction of material against the structure and the earth bank. This work shall be accomplished in conjunction with the removal of wales and braces. In no case shall the lifts for sheeting exceed the specified or otherwise approved depth of compaction layer.

(B) The Contractor shall submit to the Engineer, for approval, the Contractor's method for installation and removal of sheeting and the method for backfilling the trench. The submission shall also specify if there are any location(s) where sheeting cannot be removed and detail the reasons why the sheeting cannot be removed. The submission shall be signed by and carry the seal of a New York State Licensed Professional Engineer. These methods must be strictly adhered to.

(C) The Contractor is advised that the Contractor will be responsible for, and shall solely at the Contractor's own expense, repair, replace and/or relocate all City owned utilities that are damaged and/or disturbed due to the Contractor's removal of sheeting operation.

(D) If the Contractor is required to leave the sheeting system in place in order to protect City owned utility crossings and structures, payment will be made in accordance with **Subsection 40.05.2(A)** and **Subsection 40.05.2(B)**.

(E) This section shall not be construed to relieve the Contractor of the Contractor's obligation under the contract to maintain, protect and support (temporarily and permanently) all City owned utilities within the influence lines of the excavated trenches. The Contractor in accordance with the standards of the agencies having jurisdiction thereof shall perform such maintenance, protection and support.

(F) The cost of maintenance, protection and support (temporarily and permanently) of City owned utilities shall be included in the prices bid for all items for which there are bid prices.

(G) If a soldier beam and lagging sheeting system is utilized then all parts of the system (i.e. soldier beams, bracing, wales and lagging) must be removed.

(H) There shall be no additional payment made for repairing, replacing and/or relocating City owned utilities that may be damaged and disturbed due to the Contractor's removal of sheeting operation, or for work performed by the Contractor as directed in **Subsection 40.05.7(E)** above.

40.05.8 COST INCLUDED

There shall be no separate payment for the sheeting and bracing of trenches and excavation of water mains larger than 20-inches in diameter and appurtenances thereto including valve chambers, regulator chambers, etc.; and for the sheeting and bracing of trenches and excavation of all sewer conduits and appurtenances thereto including manholes, chambers, catch basins, etc. The cost of all labor, material, plant, equipment and insurance necessary or required to furnish and install all timber and steel sheeting together with all necessary rangers, bracing, lagging, soldier beams, etc., excavation for the placing of sheeting, backfill and compaction behind sheeting to prevent loss of ground, cut off of sheeting as specified, together with all work incidental thereto, all in accordance with the plans and specifications and as directed by the Engineer, shall be deemed included in the prices bid for the respective contract items.

40.05.9 SEPARATE PAYMENT

Separate payment will be made for the sheeting of water mains 20-inches and smaller in diameter. Payment will be made in accordance with **Section 70.91**.

(NO TEXT THIS PAGE)

SECTION 70.91
SHEETING

70.91.1 DESCRIPTION

This section describes the use of Sheeting in water main trenches and excavations only.

70.91.2 MATERIALS

All sheeting materials shall comply with **Subsection 40.05.3**.

70.91.3 CONSTRUCTION METHODS

To prevent injury to workmen or to avoid damaging existing water pipes, structures, and pavements and their foundations through caving or sliding of the banks of a trench or other excavation, protection shall be provided for all excavation work except where a determination is made by the Contractor, the Engineer or the Engineer's inspector at the work site that the nature of the excavation does not require protection.

Excavation protection, when required, shall be provided in accordance with the requirements of:

(1) U.S. Occupational Safety and Health Administration (OSHA) Construction Safety and Health Regulations, Part No. 1926, Subpart P;

(2) 23 NYCRR, Subpart 23-4 – Excavation Operations;

(3) 16 NYCRR, Part 753 – Protection of Underground Facilities;

(4) Special requirements detailed below.

NOTE: Whenever an interpretation difference exists as to selecting the applicable requirements, that of the most stringent one shall govern.

(A) SPECIAL REQUIREMENTS

Unless specifically ordered otherwise by the Engineer or the Engineer's inspector at the work site, the following Special Requirements shall be adhered to:

(a) <u>Trenches For Water Main Pipe 12-Inch In Diameter And Less</u>

In general, such trenches shall not be sheeted since, with the laying depths used, the trench bottoms will be less than five (5) feet below the ground surface. However, removal of existing pipe, or connections to existing pipe may, in some instances result in trench depths of five (5) feet or greater. In such cases, at a minimum, sheeting will be required. If sheeting is required, it shall be of sufficient length so that all ingress and egress is within the sheeted area, and shall extend at least 2 feet beyond all work locations and access points. If workmen are required to transit between sheeted areas, they must exit the trench.

If, in the opinion of the Engineer or the Engineer's inspector at the work site, sheeting is required, for whatever reason, in any trench or other excavation, the Contractor shall install it.

(b) <u>Trenches For Water Main Pipe 16-Inch and 20-Inch In Diameter</u>

All such trenches shall be sheeted, regardless of the depth of the trench.

(c) Trenches For Water Main Pipe Larger Than 20-Inch In Diameter; And Excavations For Chambers And Manholes

All such trenches shall be sheeted, regardless of the depth of the trench.

(d) Detailed Requirements As To Type And Size Of Sheeting

Unless specifically noted otherwise on the contract drawings or in these specifications, the sheeting required in paragraphs (a), (b), and (c) above, above, shall be furnished and installed in full compliance with the requirements of Section 1926.652 of the OSHA Regulations.

The size and spacing of sheeting, stringers, and cross bracing required for various soil conditions shall meet the latest OSHA Regulation requirements.

(B) SUBSTITUTION FOR TIMBER SHEETING

Any substitution for timber sheeting and bracing such as a self-supporting movable shield of timber or metal, etc., must be designed by and stamped with the seal of a Professional Engineer, licensed to practice in the State of New York, and must be approved by the Engineer in writing prior to its being used on the job. Submittal of proposed substitutions shall be made by the Contractor at least four (4) weeks prior to their scheduled use to allow for proper review and approval of it by the Engineer.

(C) SHEETING LEFT IN PLACE

Where the sheeting is ordered to be left in place, the full amount of the lumber so left in place will be paid for at fifty percent (50%) of the market value thereof, without any allowance for the cost of delivery or placing in the work. Sheeting left in place shall be cut off in accordance with **Subsection 40.05.2**.

When sheeting is ordered to be left in place, the cost of all work required for the cutting, removal and disposal of the cut sheeting shall be deemed included in the fifty percent (50%) compensation paid above.

70.91.4 MEASUREMENT

The quantity of sheeting incorporated into the work, complete, as shown, specified or required shall be computed as twice the depth of trench times the length of the sheeted trench. The depth of trench or excavation to be sheeted shall be from the ground surface to the bottom of the pipe. In those cases where a special foundation, such as a broken stone bed or a concrete cradle or mat is required, the depth of trench or excavation to be sheeted shall be from the ground surface to the bottom of such special foundation.

70.91.5 PRICE TO COVER

Payment for sheeting of trenches for water main pipe 12-inch in diameter and less shall be made per square foot under bid Item No. 70.91SW12 - FURNISHING AND PLACING SHEETING AND BRACING IN TRENCH FOR WATER MAIN PIPE 12-INCH IN DIAMETER AND LESS contained in the bid schedule.

Payment for sheeting of trenches for water main pipe 16-Inch and 20-inch in diameter shall be made per square foot under bid Item No. 70.91SW20 - FURNISHING AND PLACING SHEETING AND BRACING IN TRENCH FOR WATER MAIN PIPE 20-INCH IN DIAMETER contained in the bid schedule. Where there is no bid item for such sheeting, because the quantities of such pipe to be installed are very small, or the work involves connecting smaller size pipe to 16-Inch and 20-inch mains or larger, payment for such sheeting will be made at the unit price bid for Item No. 70.91SW12 - FURNISHING AND PLACING SHEETING AND BRACING IN TRENCH FOR WATER MAIN PIPE 12-INCH IN DIAMETER AND LESS.

The Contractor's attention is directed to the fact that the Contractor's bid price for sheeting covers the cost of extra earth excavation and other extra costs involved in laying the pipe, such as but not limited to, lesser pipe footage being installed per day, etc.

All of the above provisions are intended to apply to those instances where sheeting is required in a trench in order to lay pipe. In such instances a wider trench is required (to accommodate the sheeting) than when pipe is laid in unsheeted trenches.

When sheeting is provided in portions of a trench (to protect men inserting taps, etc.) that was originally excavated for laying a water main, and when such trench was not sheeted at the time the water main was laid, payment shall be made only for the amount of sheeting actually placed. In all such cases the payment lines for pavement excavation, pavement restoration, and satisfactory backfill shall be those specified for unsheeted trenches.

Where the OSHA Regulations do not require sheeting, but where the Contractor, for the Contractor's own convenience, installs a more limited type of trench support (stay bracing, etc.) such limited type of trench support will not be paid for. The cost of such limited trench support shall be deemed included in the various unit prices bid.

All sheeting that is to be paid for must meet all requirements of the OSHA Regulations.

70.91.6 NO SEPARATE PAYMENT

No separate payment will be made for the sheeting of water main trenches for water mains larger than 20-inches in diameter, the costs thereof shall be deemed included in the prices bid for laying these mains. No payment shall be made for sheeting at chambers and manholes, but payment thereof will be deemed to be included in the various items bid for constructing the chambers and manholes.

Payment for Furnishing And Placing Sheeting And Bracing In Trench For Water Main Pipe will be made under the Item Number as calculated below:

The Item Numbers for Furnishing And Placing Sheeting And Bracing In Trench For Water Main Pipe have nine characters. (The decimal point is considered a character, the third character.)

(1) The first five characters shall define Furnishing And Placing Sheeting And Bracing In Trench For Water Main Pipe:

70.91

(2) The sixth and seventh characters shall define Furnishing And Placing Sheeting And Bracing In Trench For Water Main Pipe:

SW - Furnishing And Placing Sheeting And Bracing In Trench For Water Main Pipe

(3) The eighth and ninth characters shall define the Size of Water Main Pipe That Trench Sheeting will be provided for:

12 - 12-Inch In Diameter And Less
20 16-Inch and 20-Inch In Diameter

(4) The Item Numbers together with Description and Pay Unit as provided in the Bid Schedule are provided below:

Item No.	Description	Pay Unit
70.91SW12	FURNISHING AND PLACING SHEETING AND BRACING IN TRENCH FOR WATER MAIN PIPE 12-INCH IN DIAMETER AND LESS	S.F.
70.91SW20	FURNISHING AND PLACING SHEETING AND BRACING IN TRENCH FOR WATER MAIN PIPE 16-INCH AND 20-INCH IN DIAMETER	S.F.

(NO TEXT THIS PAGE)

Department of Design and Construction	**SPECIFICATION BULLETIN**	**SB** 17-001

Title: **UV CURED-IN-PLACE-PIPE (CIPP) LINING METHOD**

Prepared:	Approved:
1/12/2017	1/12/2017
Richard Jones, P.E. CWI — Date	Mohsen Zargarelahi, P.E. — Date
Director, Specifications – Infrastructure Design	Assistant Commissioner – Infrastructure Design

APPLICABILITY:

- This Specification Bulletin (SB) is effective for projects advertised on or after 2/20/17.

SUPERSEDENCE:

- This SB supersedes the following SBs: **NONE**

ATTACHMENTS:

- **ATTACHMENT 1:** Revised Section 50.71 - RECONSTRUCTION OF EXISTING SEWERS USING D.E.P. APPROVED CURED-IN-PLACE-PIPE (CIPP) LINING METHOD
  Pages A1-1 through A1-9

REVISIONS TO THE NEW YORK CITY DEPARTMENT OF ENVIRONMENTAL PROTECTION STANDARD SEWER AND WATER MAIN SPECIFICATIONS, DATED 7/1/14:

All references contained below are to the New York City Department of Environmental Protection Standard Sewer and Water Main Specifications, Dated July 1, 2014. Said Standard Sewer and Water Main Specifications are hereby revised as follows:

a) **Refer** to Pages V-52 through V-59, Section 50.71 – RECONSTRUCTION OF EXISTING SEWERS USING D.E.P. APPROVED CURED-IN-PLACE-PIPE (CIPP) LINING METHOD;
Delete in its entirety the Section;
Substitute the revised Section in Attachment 1 (9 pages).

(NO TEXT THIS PAGE)

CURED-IN-PLACE-PIPE (CIPP) LINING METHOD

50.71.1 INTENT

It is the intent of this section to provide for the reconstruction of existing sewers by the installation of a resin-impregnated flexible tube that is inflated within the existing conduit to form a hard, impermeable, corrosion resistant pipe within a pipe. When cured, the cured-in-place-pipe (CIPP) will be formed to the original conduit.

50.71.2 REQUIREMENTS

(A) DESCRIPTION OF WORK

Unless otherwise specified in the contract, the Contractor shall use a Department of Environmental Protection (DEP) approved cured-in-place-pipe lining method on all existing sewers shown, specified, or ordered to be reconstructed under this contract by use of an approved lining method. All such work shall comply with the terms of this specification and with the manufacturer's standards set forth for the lining method(s) selected by the Contractor.

Under this method the Contractor shall reconstruct existing sewers by the insertion of either a flexible polyester felt or glass fiber lining tube that has been saturated with either a thermosetting or photosetting resin. The liner shall be inserted into the existing sewer either by direct inversion (ASTM F1216) using a head of water or air, or by pulling the tube into place by winching and then inflating it by inversion of a calibration hose (ASTM F1743). The thermosetting resin shall then be cured by either circulating hot water through the tube or by circulating hot air (a mixture of steam and air), or by circulating steam to cure the resin into a hard impermeable pipe. The photo-initiated resin shall be exposed to an ultraviolet light source to cure the resin into a hard impermeable pipe.

The Contractor shall make all investigations of the existing sewers to be reconstructed and shall determine and select the most effective approved lining method(s) appropriate for installation in the existing sewers to be reconstructed. The Contractor shall be responsible for the successful completion of all work required herein; failure of the Contractor's selected lining method(s) to be satisfactorily installed in the existing sewers shall not relieve the Contractor of the Contractor's responsibility to provide satisfactorily reconstructed sewers.

Any cost associated with the removal of the unsatisfactorily installed liner and the subsequent, satisfactory reinstallation of an approved liner shall be borne solely by the Contractor, and the Contractor shall not make any claim against the City for this additional required work.

Once installed, the liner shall extend from manhole to manhole in a continuous tight fitting watertight pipe-within-a-pipe, and be chemically resistant to sewage gases and materials. During the warranty period any defects that might affect the integrity or strength of the liner shall be immediately repaired or replaced by the Contractor, at the Contractor's expense, pursuant to the manufacturer's recommendations, and to the satisfaction of the Engineer.

(B) REFERENCE SPECIFICATIONS AND STANDARDS

The American Society for Testing and Materials Standard Specifications ASTM C581, D638, D790, D2990, D5813, F1216, F1743, and F2019, and the manufacturer's standards are hereby made a part of this specification.

(C) LINER SIZE AND LENGTH

The liner shall be fabricated to a size that when installed will neatly fit the internal circumference of the sewer to be lined. The liner thickness shall be designed to adequately resist all external pressures and conditions (e.g. deflection, ring bending, buckling and minimum stiffness). The length of the liner shall be

that deemed necessary to effectively span the distance and carry out the insertion and seal of the liner at the inlet and outlet manholes. The Contractor shall verify the lengths in the field before cutting the liner to length. Prior to the start of work the Contractor will be required to submit design calculations for wall thickness to the Engineer. When UV-cured liners are used, the Contractor must also submit the manufacturer's product specific data regarding the glass fiber tube, the resin and initiator cocktail system and the necessary manufacturer installation reference material detailing the type of light source and the speed in which it will be advanced to insure proper curing.
Allowance for circumferential and longitudinal stretching of the liner during installation shall be made as per the manufacturer's standards for the approved method of lining chosen. Under no circumstances shall the finished wall thickness of liner be less than six (6) millimeters in thickness.

(D) DESIGN PARAMETERS - The following design parameters shall be used in the design of pipe liners in addition to the manufacturer's standards:

(1)	Ovality of Existing Pipe	2% Minimum
(2)	Existing Pipe Condition	Fully Deteriorated
(3)	Modulus of Soil Reaction	700-psi Minimum
(4)	Factor of Safety Against Buckling	2 Minimum
(5)	Allowable Deflection	5% Maximum
(6)	Ratio of Pipe to Soil Strength	10% Minimum
(7)	Live Load	AASHTO HS20-44 Loading under Roadways AASHTO E-80 Loading under Railroads
(8)	Soil Unit Weight	120-pcf Minimum (If no Boring Data is available in vicinity.)
(9)	Creep Reduction Factor	50% Maximum

(E) LINER MATERIAL - The Contractor shall furnish, prior to use of the lining materials, satisfactory written guarantee of the Contractor's compliance with the liner manufacturer's standards for all materials (polyester felt tubing, including the polyurethane covered felt and the thermosetting resin or glass fiber tubing soaked in photosetting resin) and techniques being used in the method.

Prior to the start of work the Contractor will be required to submit to the Engineer the types of resins and the resultant cure schedules for each length and size of sewer to be lined. The finished liner shall incorporate thermosetting materials that will withstand the corrosive effects of the normal existing effluents.

(F) SAFETY - The Contractor shall carry out the Contractor's operations in strict accordance with all OSHA and manufacturer's safety requirements. Emphasis shall be placed upon safety requirements for entering confined spaces and working with hot water, steam, or resins that may cause fumes.
The Contractor shall erect such signs and other devices as are necessary for the safety of the work site and shall secure the site and conform all work to the safety requirements of all pertinent regulatory agencies.

(G) AIR QUALITY - The Contractor is advised that all liner installation work shall be carried out in full compliance with all City, State, and Federal laws, rules, and regulations regarding Air Quality and Safety.
The contractor shall take all necessary precautions to minimize the release of styrene or other VOC emissions and mitigate odors generated during set and the CIPP lining process. The Contractor shall also take <u>all necessary</u> precautions to prevent such odors from entering structures, businesses or other types of establishments, through service connections or other plumbing fixtures.

(H) FLOW BYPASSING - Prior to the start of work the Contractor will be required to submit a fluming/bypass-pumping detail in accordance with **Subsection 10.13 - (3) Existing Flow**. The Contractor shall provide for the diversion of flow of existing sewers at existing upstream manholes (if available) and pump the flow into an existing downstream manhole. The pumps and bypass lines shall

be of adequate capacity and size to handle the flow. The proposed bypassing system shall be submitted to the Engineer for approval and no work shall commence until such approval is granted.

(I) TELEVISION INSPECTION PRIOR TO INSTALLATION - All bidders are advised that a digital audio-visual inspection was made of the sewers to be reconstructed and that this recording (the "DEP recording") is available for review prior to bid opening. All prospective bidders are urged to view this recording in order to assess the suitability of the lining methods for use on this project. The City of New York does not guarantee the successful use of any particular method on this project and the Contractor shall utilize the Contractor's judgment as to the effective use of the method(s) the Contractor selects.

The Contractor will also be required to perform another television inspection and digital audio-visual recording of the sewer a maximum of seven (7) days prior to the setting up of the liner insertion equipment at the site. This inspection will be performed, utilizing a radial eye camera, to determine the latest condition of the sewer and to accurately identify the location of active service connections. Should the results of this television inspection show a condition different than that shown on the DEP recording, the Contractor shall immediately notify the Engineer.

For each section to be lined, the Contractor shall certify in writing that the DEP approved method the Contractor intends to use is suitable.

(J) CLEANING - The Contractor shall furnish all labor, materials and equipment and shall do all work necessary to remove and dispose of all debris, sediment, silt, refuse, timber, roots, and materials of all kinds which can be removed by conventional non-excavation type pipe cleaning equipment located in the existing sewers and manholes. The Contractor shall immediately notify the Engineer if such debris, etc., cannot be removed by conventional non-excavation type pipe cleaning equipment.

Protruding service connections shall be removed and paid for consistent with **Section 52.51**.

(K) SERVICE CONNECTIONS - The Contractor shall be required to determine which service connections are active and shall be responsible for controlling (or maintaining) the flow for each active service connection along the line of the sewer to be rehabilitated. Where necessary, the flow from an active service connection shall be bypassed to a manhole downstream of the proposed work by means of pumping from the trap located in the basement of the affected building. However, should such bypassing be judged unfeasible by the Engineer, the Contractor shall excavate to the service connection outside the building area (sidewalk or roadway as determined by the Engineer) and bypass the connection from this point. The pump and bypass line for each service connection shall be of adequate capacity and size to handle the flow.

Prior to the commencement of any work, the Contractor shall make all necessary investigations and prepare a plan for the controlling (or maintaining) of the flow and, where necessary, for the bypassing of active service connections. This plan shall be submitted to the Engineer for approval and no work shall commence until such approval is granted.

(L) EQUIPMENT SPECIFICATION - The Contractor shall provide suitable temperature and pressure gauges in accordance with the manufacturer's standards and specifications. High-pressure steam hoses and fittings have to be rated in accordance with the steam generator used. Thermocouples are to be marked for each fluid to be conveyed: RED-steam; BLUE-water; GREEN-air. The pulling winch shall be equipped with a tension gauge (Type-Martin Decker or Approved Equal) - smooth running and variable speed. The cutting device shall be a Gulectron type or approved equal remote monitored device when used inside the lined pipe.

The Contractor shall prepare and inspect all necessary tools and any spare parts that are required for equipment that suffer frequent breakdowns, and shall ensure that said tools and spare parts are available at the site. Supporting equipment, such as pumps and generators, shall be provided at the site in the event there is a fluid surge and pumping is required on an emergency basis. The Contractor shall also prepare and make operable all necessary communication equipment for the Contractor's field crew.

(M) INSTALLATION OF LINER - Prior to the installation of liner, the Contractor shall fully comply with **Subsections 50.71.2(C) through 50.71.2(L)**, inclusively, and with any additional requirements set forth in the specific provisions applicable to the respective lining methods. The Contractor shall not proceed with the installation of liner until the Engineer, in writing, certifies such compliance and directs the Contractor to proceed with the lining installation. The approved liner shall be installed pursuant to the specific provisions set forth for the selected lining method. If any problem occurs during the installation operation the Contractor shall investigate with a television camera from the remote manhole.

(N) PRELIMINARY TELEVISION INSPECTION OF INSTALLED LINER - After the liner is sufficiently cool (below one hundred degrees Fahrenheit (100°F)) and before opening the service connections, a preliminary television inspection and digital audio-visual recording of the newly installed liner shall be performed to determine if the liner is properly installed.

(O) SERVICE CONNECTIONS - After the liner has been installed, the Contractor shall re-open all existing active service connections and those inactive connections ordered by the Engineer. These service connections shall be re-opened and paid for consistent with **Section 52.61**.

(P) FINAL TELEVISION INSPECTION AFTER INSTALLATION - A final television inspection and digital audio-visual recording of the newly lined sewer including the restored service connections shall be performed immediately after work is completed. Should the results of this final inspection reveal any defects, as determined by the Engineer, the Contractor will be required to repair or replace these defects as ordered by the Engineer at the sole expense of the Contractor.

Payment for this final television inspection will be made under Item No. 53.11DR - TELEVISION INSPECTION AND DIGITAL AUDIO-VISUAL RECORDING OF SEWERS.

(Q) WORK SCHEDULE - The Contractor shall be permitted to occupy the lane immediately above the sewer location and the parking lane immediately adjacent to the site of work unless otherwise specified. No further roadway or traffic restrictions shall be permitted.

50.71.3 INSTALLATION

(1) PREPARING AND INSERTING THE LINER - The Contractor shall designate a location where the uncured resin in the original containers and the un-impregnated liner will be impregnated prior to installation. The Contractor shall allow the Engineer and/or the Engineer's representative to inspect the materials and chemical impregnation "wet out" procedure. A resin and catalyst system compatible with the requirement of this method shall be used. The quantities of the liquid thermosetting materials inserted into the lining tube shall be as per manufacturer's standards so as to fully saturate the liner material and provide the lining thickness specified. The contractor shall protect, store and handle materials during transportation and delivery, while stored on-site and during installation following Manufacturer's recommendations. Liners impregnated with thermo-initiated resins shall be stored within the proper temperature range and liners impregnated with photo-initiated resins shall not be exposed to UV-light sources, to insure no premature curing occurs.

Prior to installation of liner, the downstream sewer manhole adjacent to the sewer section to be lined shall be plugged.

The chemical impregnated liner material shall be inserted into the sewer line being reconstructed through the existing manhole by either the direct inversion method or by the pull-in-place method, as recommended by the manufacturer. The head used to extend the liner tube shall be sufficient enough to fully extend the tube both circumferentially and longitudinally. The head used will fall within the manufacturer's guidelines to insure that a proper finished thickness is achieved and that the liner fit snug to the existing pipe wall producing dimples at service connections and flared ends at the entrance and exit manholes.

Winch cable shall be equipped with a tension gauge to measure tension during pull through.

Inflation of liners and heat source method used shall be accomplished in accordance with manufacturer's standards and specifications.

Curing temperatures and pressures shall be monitored so as not to overstress the liner and cause damage or failure of the liner prior to cure.

The use of a lubricant is recommended and such lubricant shall be compatible with liner and resin.

The Contractor will be required to monitor and remove styrene to acceptable levels during the inflation and curing processes. An activated carbon filtration system shall be employed to remove styrene from both the process air flow and condensed steam, prior to release into the air or an adjacent or downstream sanitary or combined sewer manhole.

(2) CURING OF LINER - After inflation or inversion is completed, the Contractor shall supply a suitable heat source. The equipment shall be capable of delivering steam or hot water to the far end of the liner to uniformly raise the temperature in the entire liner above the temperature required to initiate and effect curing of the resin system. The temperature shall be determined by the resin/catalyst system employed. The heat source shall be fitted with suitable monitors to gauge the temperature and pressure of the incoming and outgoing heat exchanger circulating heating medium. Thermocouples shall be placed between the liner and the invert at each manhole so as to determine and record the temperature of the liner and time of exotherm.Initial cure shall be deemed to be completed when inspection of the exposed portions of the liner show it to be hard and sound; and when temperature reading(s) at the interface of the liner with the host pipe indicate sufficient heating has occurred. The cure period shall be of a duration recommended by the resin manufacturer; modified for the site specific conditions at the time curing is affected. During this cure time, the temperature inside the liner will be continuously maintained in the range required.

Once the cure is complete, the Contractor shall cool the hardened liner to a temperature below one hundred degrees Fahrenheit (100°F) before relieving the internal pressure. Cool down shall be accomplished as recommended by the manufacturer. Care shall be taken in the release of the internal pressure so that a vacuum will not develop that could damage the newly installed liner.

For UV-light CIPP systems, the intensity and duration of exposure to the photo-initiator's required UV-light wavelength shall be as per the manufacturer's recommendations for the proposed size and thickness of tube, to insure that the liner has been cured completely. The UV-light source shall be fitted with multiple temperature sensors to insure that reaction temperatures stay within the Manufacturer's acceptable range and do not blister the interior liner. All lamps shall be monitored to insure that they are on and functioning properly. In the event that a lamp fails or the reaction temperatures fall below the Manufacturer's acceptable range during CIPP installation, the Contractor shall reduce the speed of the light source (increasing the exposure duration) by the Manufacturer's specified amount. The Manufacturer's recommended cooling phase shall be observed after the last lamp of the light source has been turned off. The finished lining shall be continuous over the entire length and be free from visual defects such as foreign inclusions, dry spots, pinholes and delamination. The lining shall be impervious and free of any leakage from the pipe to the surrounding ground or from the ground to the inside of the lined pipe.

If due to broken or misaligned pipe at the access manhole, the lining fails to make a tight seal, the Contractor shall apply a seal of a resin mixture compatible with the liner.

After the curing has been completed, any residual water and condensation that adheres to the inner wall of the liner shall be removed. This residual water shall be collected and pumped from the channel of the downstream manhole and circulated through a separate carbon filtration unit before discharge into a downstream sanitary or combined sewer manhole. In the case of lining a storm sewer section, the collected filtered residual water and process water shall not be discharged into the downstream manhole or stream, but discharged into a nearby sanitary manhole.

50.71.4 MEASUREMENT

The quantity to be measured for payment shall be the length of reconstructed sewer, accepted by the Engineer, measured horizontally along the centerline of the sewer from inside face of manhole to inside face of manhole.

50.71.5 PRICE TO COVER

The contract price for "RECONSTRUCTION OF EXISTING SEWERS, USING D.E.P. APPROVED CIPP LINING METHOD" shall be the unit price bid per linear foot for each size sewer reconstructed by a cured-in-place-pipe DEP approved lining method and shall cover the cost of all labor, materials, plant, equipment, samples, tests and insurance required or necessary to reconstruct the sewers of the sizes shown including the cleaning of the existing sewers using conventional non-excavation type pipe cleaning equipment; television inspection prior to installation; diversion of flow of existing sewers; controlling (or maintaining) the flow for all active service connections; necessary bypassing and pumping of the existing active service connections; repair of active service connections; all necessary excavation, backfilling and compaction; complete installation of the liner; preliminary television inspection of installed liner; temporary and permanent restoration of all disturbed sidewalk and pavement areas (unless items for temporary and permanent restoration are otherwise provided in the Bid Schedule); cleaning up; and furnishing and installing all other items necessary to complete this work and do all work incidental thereto, all in accordance with the plans and specifications and as directed by the Engineer.

50.71.6 SEPARATE PAYMENT

Payment for this final television inspection will be made under Item No. 53.11DR - TELEVISION INSPECTION AND DIGITAL AUDIO-VISUAL RECORDING OF SEWERS.

Payment for Reconstruction Of Existing Sewers Using D.E.P. Approved Cured-In-Place-Pipe (CIPP) Lining Method will be made under the Item Number as calculated below:

The Item Numbers for Reconstruction Of Existing Sewers Using D.E.P. Approved Cured-In-Place-Pipe (CIPP) Lining Method have eleven characters. (The decimal point is considered a character, the third character.)

(1) The first five characters shall define Reconstruction Of Existing Sewers Using D.E.P. Approved Cured-In-Place-Pipe (CIPP) Lining Method:

50.71

(2) The sixth character shall define the Type of Sewer Effluent:

S - Sanitary Sewer
M - Storm Sewer
C - Combined Sewer
I - Interceptor Sewer

(3) The seventh and eighth characters shall define either the Diameter of the Sewer for Existing Circular Sewers or the Width of the Sewer for Existing Horizontal Elliptical Sewers, Vertical Elliptical Sewers and Egg-Shaped Sewers. (The seventh and eighth characters representing the unit of inches for either the Diameter of the Sewer for Existing Circular Sewers or the Width of the Sewer for Existing Horizontal Elliptical Sewers, Vertical Elliptical Sewers and Egg-Shaped Sewers.) See examples below:

10 - 10"
30 - 30"

(4) The ninth character shall define the Shape of the Existing Sewer:

D - Circular (Diameter)

H - Horizontal Elliptical
V - Vertical Elliptical
E - Egg-Shaped
R - Rectangular

(5) The tenth and eleventh characters shall define either Circular or the Height of the Sewer for Existing Horizontal Elliptical Sewers, Vertical Elliptical Sewers and Egg-Shaped Sewers. (The tenth and eleventh characters representing either Circular or the unit of inches for the Height of the Sewer for Existing Horizontal Elliptical Sewers, Vertical Elliptical Sewers and Egg-Shaped Sewers.) See examples below:

00 - Circular
19 - 19"
32 - 32"

(6) Examples of Item Numbers together with Description and Pay Unit as provided in the Bid Schedule are provided below:

Item No.	Description	Pay Unit
50.71S10D00	RECONSTRUCTION OF EXISTING 10" DIAMETER CIRCULAR SANITARY SEWER, USING D.E.P. APPROVED CIPP LINING METHOD	L.F.
50.71S12D00	RECONSTRUCTION OF EXISTING 12" DIAMETER CIRCULAR SANITARY SEWER, USING D.E.P. APPROVED CIPP LINING METHOD	L.F.
50.71S18D00	RECONSTRUCTION OF EXISTING 18" DIAMETER CIRCULAR SANITARY SEWER, USING D.E.P. APPROVED CIPP LINING METHOD	L.F.
50.71S24D00	RECONSTRUCTION OF EXISTING 24" DIAMETER CIRCULAR SANITARY SEWER, USING D.E.P. APPROVED CIPP LINING METHOD	L.F.
50.71S23H14	RECONSTRUCTION OF EXISTING 23"W X 14"H HORIZONTAL ELLIPTICAL SANITARY SEWER, USING D.E.P. APPROVED CIPP LINING METHOD	L.F.
50.71S30H19	RECONSTRUCTION OF EXISTING 30"W X 19"H HORIZONTAL ELLIPTICAL SANITARY SEWER, USING D.E.P. APPROVED CIPP LINING METHOD	L.F.
50.71S14V23	RECONSTRUCTION OF EXISTING 14"W X 23"H VERTICAL ELLIPTICAL SANITARY SEWER, USING D.E.P. APPROVED CIPP LINING METHOD	L.F.
50.71S19V30	RECONSTRUCTION OF EXISTING 19"W X 30"H VERTICAL ELLIPTICAL SANITARY SEWER, USING D.E.P. APPROVED CIPP LINING METHOD	L.F.
50.71S20E29	RECONSTRUCTION OF EXISTING 20"W X 29"H EGG-SHAPED SANITARY SEWER, USING D.E.P. APPROVED CIPP LINING METHOD	L.F.
50.71S24E42	RECONSTRUCTION OF EXISTING 24"W X 42"H EGG-SHAPED SANITARY SEWER, USING D.E.P. APPROVED CIPP LINING METHOD	L.F.
50.71S25E37	RECONSTRUCTION OF EXISTING 25"W X 37"H EGG-SHAPED SANITARY SEWER, USING D.E.P. APPROVED CIPP LINING METHOD	L.F.
50.71S29E40	RECONSTRUCTION OF EXISTING 29"W X 40"H EGG-SHAPED SANITARY SEWER, USING D.E.P. APPROVED CIPP LINING METHOD	L.F.
50.71M15D00	RECONSTRUCTION OF EXISTING 15" DIAMETER CIRCULAR STORM SEWER, USING D.E.P. APPROVED CIPP LINING METHOD	L.F.
50.71M18D00	RECONSTRUCTION OF EXISTING 18" DIAMETER CIRCULAR STORM SEWER, USING D.E.P. APPROVED CIPP LINING METHOD	L.F.
50.71M30D00	RECONSTRUCTION OF EXISTING 30" DIAMETER CIRCULAR STORM SEWER, USING D.E.P. APPROVED CIPP LINING METHOD	L.F.
50.71M42D00	RECONSTRUCTION OF EXISTING 42" DIAMETER CIRCULAR STORM SEWER, USING D.E.P. APPROVED CIPP LINING METHOD	L.F.
50.71M38H24	RECONSTRUCTION OF EXISTING 38"W X 24"H HORIZONTAL ELLIPTICAL STORM SEWER, USING D.E.P. APPROVED CIPP LINING METHOD	L.F.

50.71M53H34	RECONSTRUCTION OF EXISTING 53"W X 34"H HORIZONTAL ELLIPTICAL STORM SEWER, USING D.E.P. APPROVED CIPP LINING METHOD	L.F.
50.71M24V38	RECONSTRUCTION OF EXISTING 24"W X 38"H VERTICAL ELLIPTICAL STORM SEWER, USING D.E.P. APPROVED CIPP LINING METHOD	L.F.
50.71M32V48	RECONSTRUCTION OF EXISTING 32"W X 48"H VERTICAL ELLIPTICAL STORM SEWER, USING D.E.P. APPROVED CIPP LINING METHOD	L.F.
50.71M34V53	RECONSTRUCTION OF EXISTING 34"W X 53"H VERTICAL ELLIPTICAL STORM SEWER, USING D.E.P. APPROVED CIPP LINING METHOD	L.F.
50.71M30E45	RECONSTRUCTION OF EXISTING 30"W X 45"H EGG-SHAPED STORM SEWER, USING D.E.P. APPROVED CIPP LINING METHOD	L.F.
50.71M33E48	RECONSTRUCTION OF EXISTING 33"W X 48"H EGG-SHAPED STORM SEWER, USING D.E.P. APPROVED CIPP LINING METHOD	L.F.
50.71M35E52	RECONSTRUCTION OF EXISTING 35"W X 52"H EGG-SHAPED STORM SEWER, USING D.E.P. APPROVED CIPP LINING METHOD	L.F.
50.71M40E53	RECONSTRUCTION OF EXISTING 40"W X 53"H EGG-SHAPED STORM SEWER, USING D.E.P. APPROVED CIPP LINING METHOD	L.F.
50.71M24R36	RECONSTRUCTION OF EXISTING 24"W X 36"H RECTANGULAR STORM SEWER, USING D.E.P. APPROVED CIPP LINING METHOD	L.F.
50.71M32R48	RECONSTRUCTION OF EXISTING 32"W X 48"H RECTANGULAR STORM SEWER, USING D.E.P. APPROVED CIPP LINING METHOD	L.F.
50.71C16D00	RECONSTRUCTION OF EXISTING 16" DIAMETER CIRCULAR COMBINED SEWER, USING D.E.P. APPROVED CIPP LINING METHOD	L.F.
50.71C24D00	RECONSTRUCTION OF EXISTING 24" DIAMETER CIRCULAR COMBINED SEWER, USING D.E.P. APPROVED CIPP LINING METHOD	L.F.
50.71C36D00	RECONSTRUCTION OF EXISTING 36" DIAMETER CIRCULAR COMBINED SEWER, USING D.E.P. APPROVED CIPP LINING METHOD	L.F.
50.71C48D00	RECONSTRUCTION OF EXISTING 48" DIAMETER CIRCULAR COMBINED SEWER, USING D.E.P. APPROVED CIPP LINING METHOD	L.F.
50.71C45H29	RECONSTRUCTION OF EXISTING 45"W X 29"H HORIZONTAL ELLIPTICAL COMBINED SEWER, USING D.E.P. APPROVED CIPP LINING METHOD	L.F.
50.71C60H38	RECONSTRUCTION OF EXISTING 60"W X 38"H HORIZONTAL ELLIPTICAL COMBINED SEWER, USING D.E.P. APPROVED CIPP LINING METHOD	L.F.
50.71C29V45	RECONSTRUCTION OF EXISTING 29"W X 45"H VERTICAL ELLIPTICAL COMBINED SEWER, USING D.E.P. APPROVED CIPP LINING METHOD	L.F.
50.71C34V53	RECONSTRUCTION OF EXISTING 34"W X 53"H VERTICAL ELLIPTICAL COMBINED SEWER, USING D.E.P. APPROVED CIPP LINING METHOD	L.F.
50.71C38V60	RECONSTRUCTION OF EXISTING 38"W X 60"H VERTICAL ELLIPTICAL COMBINED SEWER, USING D.E.P. APPROVED CIPP LINING METHOD	L.F.
50.71C32E44	RECONSTRUCTION OF EXISTING 32"W X 44"H EGG-SHAPED COMBINED SEWER, USING D.E.P. APPROVED CIPP LINING METHOD	L.F.
50.71C34E46	RECONSTRUCTION OF EXISTING 34"W X 46"H EGG-SHAPED COMBINED SEWER, USING D.E.P. APPROVED CIPP LINING METHOD	L.F.
50.71C38E50	RECONSTRUCTION OF EXISTING 38"W X 50"H EGG-SHAPED COMBINED SEWER, USING D.E.P. APPROVED CIPP LINING METHOD	L.F.
50.71C41E60	RECONSTRUCTION OF EXISTING 41"W X 60"H EGG-SHAPED COMBINED SEWER, USING D.E.P. APPROVED CIPP LINING METHOD	L.F.
50.71C42E56	RECONSTRUCTION OF EXISTING 42"W X 56"H EGG-SHAPED COMBINED SEWER, USING D.E.P. APPROVED CIPP LINING METHOD	L.F.
50.71C30R42	RECONSTRUCTION OF EXISTING 30"W X 42"H RECTANGULAR COMBINED SEWER, USING D.E.P. APPROVED CIPP LINING METHOD	L.F.
50.71C36R48	RECONSTRUCTION OF EXISTING 36"W X 48"H RECTANGULAR COMBINED SEWER, USING D.E.P. APPROVED CIPP LINING METHOD	L.F.
50.71I36D00	RECONSTRUCTION OF EXISTING 36" DIAMETER CIRCULAR	L.F.

	INTERCEPTOR SEWER, USING D.E.P. APPROVED CIPP LINING METHOD	
50.71I48D00	RECONSTRUCTION OF EXISTING 48" DIAMETER CIRCULAR INTERCEPTOR SEWER, USING D.E.P. APPROVED CIPP LINING METHOD	L.F.
50.71I36R48	RECONSTRUCTION OF EXISTING 36"W X 48"H RECTANGULAR INTERCEPTOR SEWER, USING D.E.P. APPROVED CIPP LINING METHOD	L.F.

(NO TEXT THIS PAGE)

Department of Design and Construction	**SPECIFICATION BULLETIN**	**SB 17-002**

Title: **RODENT AND WATERBUG PEST CONTROL**

Prepared:	Approved:
1/12/2017	1/12/2017
Richard Jones, P.E. CWI — Date	Mohsen Zargarelahi, P.E. — Date
Director, Specifications – Infrastructure Design	Assistant Commissioner – Infrastructure Design

APPLICABILITY:

- This Specification Bulletin (SB) is effective for projects advertised on or after 2/20/17.

SUPERSEDENCE:

- This SB supersedes the following SBs: **NONE**

ATTACHMENTS:

- **ATTACHMENT 1:** Revised Section 7.88 – Rodent and Waterbug Pest Control
  Pages A1-1 through A1-6

REVISIONS TO THE NEW YORK CITY DEPARTMENT OF TRANSPORTATION STANDARD HIGHWAY SPECIFICATIONS VOLUME 1 OF 2, DATED 8/1/15:

No Changes.

REVISIONS TO THE NEW YORK CITY DEPARTMENT OF TRANSPORTATION STANDARD HIGHWAY SPECIFICATIONS VOLUME 2 OF 2, DATED 8/1/15:

All references contained below are to the New York City Department of Transportation Standard Highway Specifications, Dated August 1, 2015. Said Standard Highway Specifications are hereby revised as follows:

a) **Refer** to Pages 515 through 520, Section 7.88 – Rodent and Waterbug Pest Control;
Delete in its entirety the Section;
Substitute the revised Section in Attachment 1 (6 pages).

(NO TEXT THIS PAGE)

SECTION 7.88 - Rodent and Waterbug Pest Control

7.88.1. DESCRIPTION. The Contractor shall provide all labor, materials, plant and equipment, and incidentals required to survey and monitor rodent activity and control any infestation or outbreak of rodents and waterbugs (cockroaches) within the project limit.
New York City ("NYC") Local Law 37 of 2005 requires that the Contractor, or any subcontractor that the Contractor hires, shall comply with Chapter 12 of Title 17 of the NYC Administrative Code with respect to the application of pesticides to any property owned or leased by the City of New York..

7.88.2. MATERIALS. All materials shall be Registered by the New York State Department of Environmental Conservation ("NYSDEC") and comply with the NYC Health Code for the intended usage. Materials classified as Toxicity Category I, carcinogenic to humans by the US Environmental Protection Agency ("USEPA"), or classified as a developmental toxin by the State of California's Office of Environmental Health Hazard Assessment shall not be used. The Contractor shall verify that materials are:

- "NOT PROHIBITED" by the NYC Department of Health and Mental Hygiene ("NYC-DOHMH") using the NYC-DOHMH's Pesticide Product Search, available at: < https://a816-healthpsi.nyc.gov/ll37/ProductTestPesticide.aspx >.
- On the NYSDEC's list of Currently Registered Pesticides, available at: < http://pims.psur.cornell.edu/ >.

Rodenticide weatherproof (wax based) bait blocks shall be multiple dose anticoagulants such as Chlorophacinone, or single feed anticoagulants such as Brodifacoum (Weatherblok XT, Final All-Weather Blox), Bromadiolone (Contrac Blox), or an approved equivalent, registered by NYSDEC and not prohibited by NYC-DOHMH. Loose rodenticide meal or rodenticide pellet bait shall not be used.

Tamper proof bait station boxes shall be designed to exclude other mammals and shall be used with poisoned bait to attract rats. Information on "tamper proof bait station boxes" is available from the NYC-DOHMH Office of Pest Control Services (646-632-6600).

Live traps shall be of proper dimensions for trapping rats and mice, and shall not be used with poisoned bait.

Insecticide bait shall be a residual type registered by NYSDEC and not prohibited by NYC-DOHMH.

(A) SUBMITTALS

Prior to commencement of construction activities the Contractor shall submit to the Engineer manufacturer's installation instructions for all materials required for rodent and waterbug pest control work and product data which shall include illustrations, catalog data, pesticide labels, product characteristics, typical use, performance and limitation criteria of all rodent and waterbug pest control materials required. All pesticides and rodenticide submittals shall be accompanied by a printout from the NYC-DOHMH Pesticide Product Search showing that the specific brand of pesticide and rodenticide is "NOT PROHIBITED."

7.88.3. PERSONNEL. The Contractor shall employ two independent licensed exterminators: one to engage in survey and monitoring work to establish the level of infestation of rodents and insects and provide recommendations for specific Integrated Pest Management ("IPM") actions, and one to execute the rodent and waterbug pest control work to deal with such infestations. All pest control personnel employed by each exterminator company shall be licensed by NYSDEC as a Commercial Pesticide Applicator, Commercial Pesticide Technician or Commercial Pesticide Apprentice and must be supervised by an exterminator licensed by NYSDEC as a Commercial Applicator in categories 7A ("Structural & Rodent Control") & 8 ("Public Health Pest Control"). It is recommended (but not required) that all personnel engaged in survey and monitoring work or rodent control work possess a certificate of

completion from the NYC-DOHMH's half-day or three-day "Rodent Academy." The Contractor shall submit the names and license credentials of the two exterminator companies to the Engineer for approval prior to the commencement of any work under this section.

7.88.4. METHODS. Application and dosage of all materials shall be done in strict compliance with the manufacturer's recommendations. All surveying, monitoring, baiting, and/or live trapping work shall be performed in the presence of the Engineer, without which no payment will be made under this Section.

(A) GENERAL

The Contractor's construction activity is expected to disturb any established rodent and/or waterbug population that may exist within the project limits, possibly causing their dispersion. The Contractor shall take all appropriate action to eliminate and/or control these populations within the construction corridor: the construction corridor shall be defined as being the full width of streets under the contract and intersecting streets up to the limits of construction, from property line to property line, excluding buildings and under sidewalk building vaults.

Under the Maintenance of Site requirements for the contract, any unsanitary conditions, such as uncollected garbage or debris, resulting from the Contractor's activities which will provide food and shelter to the resident rodent population shall be corrected by the Contractor immediately after notification of such condition by the Engineer. Non-compliance shall be subject to the application of the "Nonconformance" provisions of the Item for Maintenance of Site, and no payment will be made for any additional application of rodenticide or insecticide needed to control resultant infestations.

(B) SURVEY AND MONITORING WORK

(1) Prior to Construction - The Contractor's designated survey and monitoring exterminator shall execute a survey of the project area and estimate the level of rodent (Norway rat, House mouse) infestation and the waterbug population within the construction corridor. An appropriate sample of utility manholes (sewer, electrical, telephone, etc.) and catch basins should be opened and surveyed to the satisfaction of the Engineer. Contractor shall maintain all survey records in the manner described in 7.88.6., Records and Reports.

(2) During Construction - The Contractor shall monitor the rodent activity through trapping (snap, glue traps or live traps), fecal count methods, and inspection of the conditions of all installed baits every week during construction activity or as otherwise directed by the Engineer. Monitoring during construction shall cover Contractor's plant and temporary facilities. Contractor shall maintain all monitoring records in the manner described in Section 7.88.6. on "Records and Reports" of this specification.

(C) RODENT CONTROL WORK

(1) Wetlands, Woodlands and Areas Within Seventy-five (75') feet of a Stream. In wetlands, woodlands and areas adjacent to a stream, special precautions must be taken to protect water quality and to ensure the safety of other wildlife. To prevent poisoned bait from entering streams, no poisoned bait shall be used in areas within seventy-five (75') feet of either streambank. Live traps must be used in these seventy-five (75') feet buffer zone areas and within wetland and woodland areas.

(2) Outside Wetland Areas, Woodland Areas and Beyond Seventy-five (75') feet of a Stream. In areas outside the seventy-five foot zone of protection adjacent to streams, and areas outside wetlands and woodlands, tamper proof bait stations with poisoned bait shall be established during the period of construction and any consumed or decomposed bait shall be replenished as directed.

Rodent control shall be achieved in two stages as follows:

Stage I. At least one month prior to initiation of the construction work, and periodically thereafter, live traps and/or rodenticide bait, as directed above, shall be placed at locations [e.g., burrows, utility manholes (sewer, electrical, phone, etc.), and catch basins] that are inaccessible to pets, human beings, children and other non-target species, particularly wildlife (e.g., birds) in the construction corridor. Locations of initial bait placement and quantities of bait shall be determined by the survey and monitoring exterminator's written report of his survey and monitoring results, or as otherwise directed by the Engineer.

Stage II. During Construction - Infested sites as determined by the survey and monitoring exterminator's monitoring report shall be baited and/or rebaited, and live traps shall be collected and replaced, the rates and quantities of which shall be determined by the written monitoring reports submitted weekly or as otherwise directed by the Engineer in consultation with the City's Office of Pest Control.

Bait may be placed in dry manholes without a tamper-proof bait station box, if the manhole configuration does not permit the use of a bait station box. If a sanitary sewer manhole has a concrete invert platform of sufficient size, a bait box shall be used. Bait placed in a manhole outside of a tamper-proof box shall be strung on a stainless-steel wire, and secured to the manhole structure. No separate payment shall be made for the wire or securing the wire to the manhole, and shall be deemed included in the bid price for Baiting of Rodent Base Stations. Rodent control personnel entering manholes shall comply with the confined space requirements required by the Occupational Safety and Health Administration ("OSHA") 29 CFR 1929 - Subpart AA – Confined Spaces in Construction.

The use of tamper proof bait station boxes shall be used with rodenticide in all other cases.

The baiting exterminator shall be responsible for collecting and disposing of all trapped and poisoned rodents found in live traps and tamper proof bait stations. Non-target species captured in live traps shall be released by the baiting exterminator within twenty-four (24) hours after notification by the Engineer. The baiting exterminator shall also be responsible for posting and maintaining signs announcing the baiting of each particular location. The signs shall be placed at least twenty-four (24) hours prior to the application of any pesticide or rodenticide, and shall meet the requirements of Local Law 37 of 2005. NYC-DOHMH provides a sample template sign for pesticide notification purposes in compliance with the law at:
< http://www1.nyc.gov/assets/doh/downloads/pdf/pesticide/notification-sign.pdf >.

The Contractor, under his maintenance of site operations, shall be responsible for the immediate collection and disposal of any visible rodent remains found on streets or sidewalk within the project limits. Any visible remains shall be placed into double plastic bags. No more than five (5) carcasses shall be placed into each bag. Each bag shall be a minimum of three (3) mils thick, black plastic. The bag shall have a note taped on with the contents (e.g., "dead rat"), and disposed as required by the NYC Department of Sanitation. No additional payment will be made for this work.

It is anticipated that public complaints will be addressed to the Engineer's Field Office. The Contractor, where directed by the Engineer, shall take appropriate Integrated Pest Management ("IPM") actions, such as baiting, trapping, proofing, etc., to remedy the source of a complaint within the next six (6) hours of normal working time, which is defined herein, for the purposes of this section, as 7 A.M. to 6 P.M. on Mondays through Saturdays.

(D) WATERBUG CONTROL

Waterbugs shall include American Cockroaches, Oriental Cockroaches, Smoky Brown Cockroaches, Madeira Cockroaches, and other similar species.

Infested sites (e.g., sewers) shall be baited at least two (2) times per month with insecticides, or as directed by the Engineer in consultation with the exterminator monitoring the work and the NYC-DOHMH Office of Pest Control Services.

7.88.5. EDUCATION & TRAINING. The Contractor shall post notices in all Construction Bulletin Boards advising workers, employees, and residents to call the Engineer's Field Office to report rodent and waterbug infestations. The Contractor shall provide and distribute literature pertaining to IPM techniques of rodent control to affected businesses and superintendents of nearby residential buildings to ensure their participation in maintaining their establishments free of unsanitary conditions, harborage removal and rodent proofing.

Prior to application of any chemicals, the Contractor shall furnish copies or sample labels for each pesticide, antidote information and Material Data Safety Sheets ("MSDS") for each chemical used.

7.88.6. RECORDS AND REPORTS.

(A) GENERAL

The Contractor shall be responsible for assigning within the construction corridor an identifying number to each manhole, catch basin, and other location where bait and/or live trap placement and/or waterbug control work is proposed by the survey and monitoring exterminator. The Contractor shall then provide that list of locations and corresponding reference numbers along with a drawing showing the locations, as a reference for the exterminator(s) performing the work, to indicate locations of bait placement and waterbug control work and rodent and waterbug activity (droppings, bait consumed, dead rodents, etc.)

(B) SURVEY AND MONITORING WORK

(1) Prior to Construction – Contractor shall submit to the Engineer, for approval, a written survey report including proposed IPM procedures, including specific materials, quantities, locations, methods and time schedule for the implementation of the exterminating work. The written report shall also include a survey with a drawing (provided by the Contractor) marked with locations indicating all signs of rodent (Norway rat, House mouse) infestation and waterbug activity discovered during the execution of the survey indicating that rodent and waterbug pest control work is necessary. The report will be developed with input from the NYC-DOHMH Rat Information Portal at: < http://maps.nyc.gov/doitt/nycitymap/template/?applicationName=DOH_RIP >.

(2) During Construction - Based on monitoring results, Contractor shall submit to the Engineer a weekly written monitoring report identifying all locations and conditions of installed bait and/or other rodent control work. The monitoring report shall also include any other recommended IPM techniques, such as baiting, trapping, proofing, etc., proposed for rodent and waterbug pest control.

The survey and monitoring exterminator shall keep a record of all rodent and waterbug infestation surveys s/he has conducted. The Contractor shall be required to submit a copy of all survey and monitoring reports to the Engineer each week, prior to payment.

(C) RODENT AND WATERBUG CONTROL WORK

The baiting exterminator shall maintain records using the NYC Pesticide Use Reporting System ("NYCPURS"). These records will be kept by the Engineer. A weekly report from NYCPURS shall be prepared, signed and certified by the approved licensed exterminator, and such reports shall be submitted to the Engineer each week, prior to payment.

7.88.7. NONCONFORMANCE. If the Contractor fails to perform as directed to control the rodent and/or waterbug population at any location within the project limits for a period of more than one week, the Engineer will correct the adverse conditions by any means he deems appropriate, including but not limited to, the use of "outside services" and shall deduct the cost of the corrective work from any monies due to the Contractor. The deducted cost of this work shall be in addition to the non-payment for rodent and waterbug pest control.

7.88.8. MEASUREMENT.

(A) RODENT INFESTATION SURVEY AND MONITORING

The quantity to be measured for payment under Item No. 7.88 AA, RODENT INFESTATION SURVEY AND MONITORING, shall be a Lump Sum measurement.

(B) RODENT BAIT STATIONS

The quantity to be measured for payment under Item No. 7.88 AB, RODENT BAIT STATIONS, shall be the number of tamper-proof rodent bait station boxes and/or live traps satisfactorily installed or reinstalled after inspection within the construction corridor, as approved by the Engineer. However, the initial baiting, and subsequent rebaiting as may be required, of any bait station will be paid for under Item No. 7.88 AC.

(C) BAITING OF RODENT BAIT STATIONS

The quantity to be measured for payment under Item No. 7.88 AC, BAITING OF RODENT BAIT STATIONS, shall be the number of tamper-proof rodent bait station boxes, utility manholes, catch basins, or other locations approved by the Engineer, satisfactorily baited or rebaited to replenish consumed or decomposed bait within the construction corridor, as approved by the Engineer.

(D) WATERBUG BAIT APPLICATION

The quantity to be measured for payment under Item No. 7.88 AD, WATERBUG BAIT APPLICATIONS, shall be the number of blocks satisfactorily treated with insecticide bait within the construction corridor, as approved by the Engineer. A block shall be defined as the area of street, measured between property lines, from intersection to intersection. Each rebaiting of any block shall be considered as a new block for measurement purposes.

7.88.9. PRICES TO COVER.

(A) RODENT INFESTATION SURVEY AND MONITORING

Payment will be made at the lump sum price bid for RODENT INFESTATION SURVEY AND MONITORING which shall include the cost of furnishing all the labor, materials, plant, equipment (traps, etc.), insurance, and other incidentals required, including but not limited to providing all required maintenance of traffic equipment, to perform a rodent infestation survey of the project area and then monitor the site each week for rodent activity, all in accordance with the specifications and the directions of the Engineer.

Ten (10%) percent of the lump sum price bid will be paid when the initial survey of the project area has been completed and the written survey report has been submitted to the satisfaction of the Engineer. The remainder will be paid in proportion to the percentage of contract completion.

(B) RODENT BAIT STATIONS

The Contract price bid for RODENT BAIT STATIONS shall be a unit price per each tamper proof bait station box and/ or live trap installed or reinstalled after inspection and shall cover the cost of furnishing

all labor, materials, plant, equipment (bait stations, etc.), insurance, and other incidentals, including but not limited to providing all required maintenance of traffic equipment, required to control the rodent population found within the project limits in accordance with the specifications and the directions of the Engineer.

In addition to the payment for Rodent Bait Stations installed or reinstalled under this Item No. 7.88 AB, the Contractor will also be paid for each baiting or rebaiting, when required, of each bait station, under Item No. 7.88 AC.

(C) BAITING OF RODENT BAIT STATIONS

The Contract price bid for BAITING OF RODENT BAIT STATIONS shall be a unit price per each bait station, utility manhole, catch basin or other location approved by the Engineer satisfactorily baited or rebaited, when required, and shall cover the cost of furnishing all labor, materials, plant, equipment (bait), insurance, NYCPURS recordkeeping, and other incidentals, in accordance with the specifications and directions of the Engineer. Installation or resetting of the bait station will be paid for under Item No. 7.88 AB.

(D) WATERBUG BAIT APPLICATION

The Contract price bid for WATERBUG BAIT APPLICATION shall be a unit price per block treated by the exterminator and shall include the cost of furnishing all the labor, materials, plant, equipment (bait, etc.), insurance, NYCPURS recordkeeping, and other incidentals, including but not limited to providing all required maintenance of traffic equipment, necessary to control the waterbug population found within the project limits for the duration of the contract in accordance with the specifications and the directions of the Engineer.

Payment will be made under:

Item No.	Item	Pay Unit
7.88 AA	RODENT INFESTATION SURVEY AND MONITORING	L.S.
7.88 AB	RODENT BAIT STATIONS	EACH
7.88 AC	BAITING OF RODENT BAIT STATIONS	EACH
7.88 AD	WATERBUG BAIT APPLICATION	BLOCK

Department of Design and Construction	**SPECIFICATION BULLETIN**	**SB 17-003**

Title: **ENGINEER'S FIELD OFFICE**

Prepared:	Approved:
1/12/2017	1/12/2017
Richard Jones, P.E. CWI — Date	Mohsen Zargarelahi, P.E. — Date
Director, Specifications – Infrastructure Design	Assistant Commissioner – Infrastructure Design

APPLICABILITY:

- This Specification Bulletin (SB) is effective for projects advertised on or after 2/20/17.

SUPERSEDENCE:

- This SB supersedes the following SBs: **NONE**

ATTACHMENTS:

- **ATTACHMENT 1:** Revised Section 6.40 – Engineer's Field Office
  Pages A1-1 through A1-7

REVISIONS TO THE NEW YORK CITY DEPARTMENT OF TRANSPORTATION STANDARD HIGHWAY SPECIFICATIONS VOLUME 1 OF 2, DATED 8/1/15:

No Changes.

REVISIONS TO THE NEW YORK CITY DEPARTMENT OF TRANSPORTATION STANDARD HIGHWAY SPECIFICATIONS VOLUME 2 OF 2, DATED 8/1/15:

All references contained below are to the New York City Department of Transportation Standard Highway Specifications, Dated August 1, 2015. Said Standard Highway Specifications are hereby revised as follows:

a) **Refer** to Pages 372 through 379, Section 6.40 – Engineer's Field Office;
Delete in its entirety the Section;
Substitute the revised Section in Attachment 1 (7 pages).

(NO TEXT THIS PAGE)

SECTION 6.40 - Engineer's Field Office

6.40.1. DESCRIPTION. The Contractor shall provide, furnish and maintain a fully equipped field office (Type A, B, C, CU, D or DU, as specified) for the exclusive use of and occupancy by the Department's engineering personnel and/or Supervising Consultant (herein after called "City personnel"), and by the engineering personnel of private utilities when specified. The field office shall be at a location approved by the Engineer and shall be a commercial building, store front, or with the approval of both Office of Construction Mitigation and Coordination (OCMC) and the Community Board it may be a mobile trailer(s). If a trailer is used it shall be subject to approval by the Engineer, and all necessary permits shall be obtained by the Contractor. The Contractor may have facilities in an adjoining area separated by a lockable door, provided such facilities are in a location approved by the Engineer. The field office shall be within ½ mile of the job site. Field offices located further than ½ mile from the job site shall require approval by the Director or Assistant Commissioner for Construction.

The field office structure and occupancy thereof shall conform to the requirements of all laws, rules, regulations and orders applicable to it.

The field office and all equipment, except as otherwise specified, may be new materials or may be used materials in good condition and satisfactory to the Engineer.

6.40.2. MATERIALS.

(A) GENERAL CONSTRUCTION. The Engineer's Field Office shall be in an approved and weatherproof building. It shall have a minimum ceiling height of seven (7') feet and be partitioned to provide the number of rooms required for the type of office specified. Floor space for Field Office Types C, CU, D, and DU shall be subdivided into work areas based on a floor plan provided by the City to the Contractor upon notification of space availability.

(B) GENERAL FACILITIES. The field office shall contain or have the following facilities incorporated:

(a) Lighting - Electric light, non-glare type luminaries to provide a minimum illumination level of 100 ft.- candles at desk height level.

(b) Heating and Cooling - Adequate equipment to maintain an ambient air temperature of 70° F. $\pm 5^{o}$.

(c) Electrical Energy Outlets

(d) Toilet - A separate enclosed room, properly ventilated per code and complying with applicable sanitary codes shall contain a lavatory with a sink that provides running hot and cold water, flush-type toilet, mirror, electric hand dryer, and paper towel dispenser.

(e) Potable Water - Potable water supplied from an existing system or five (5) gallon capacity water cooler of a type to be approved by the Engineer shall be provided for use by City personnel. Replacement bottles of water shall be provided by the Contractor, when required.

(f) Signs - Store front locations shall have a window graphic sign in black and white lettering with the following inscription. Other locations shall have a wood or metal sign affixed on the outside wall of the building with the following inscription painted in black block lettering on a white background. Paints shall be approved exterior enamels.

CITY OF NEW YORK	2-1/2"
DEPARTMENT OF DESIGN AND CONSTRUCTION	3-1/2"
INFRASTRUCTURE	2-1/2"
RESIDENT ENGINEER'S FIELD OFFICE	2-1/2"

(g) Electric Refrigerator - Five (5) cubic feet minimum capacity for use by City personnel.

(h) Microwave, Toaster Oven, and Coffee Maker - Basic reheating kitchen equipment or approved appliances for use by City personnel.

(i) Windows and Doors - All windows and doors shall be weatherproof and each equipped with adequate locking devices. Each window shall be equipped with vertical blinds. Exterior doors shall be provided with two (2) separate "high security" dead bolt type cylinder locks, keyed alike, and three (3) keys shall be furnished for each lock.

(j) Partitions - Partitions for work space enclosures shall be either permanent walls or of the modular type similar to Herman Miller's standard fabric covered line.

(k) Kitchen Sink – Mechanism to provide non-drinking, hot and cold, running water.

(C) OFFICE EQUIPMENT.

(a) Pencil Sharpener - One standard pencil sharpener for use by City personnel.

(b) Telephone Answering Machine - The telephone answering machine to be provided shall be an electronic digital voice machine with emergency call forwarding capability. It shall be operable twenty four (24) hours per day and, when unattended, shall transmit to the caller the following message:

"You have reached the Field Office of the New York City Dept. of Design and Construction. No one is here now. We check our incoming messages frequently. We will get back to you as soon as possible. Please leave your name, message and phone number where you may be reached. In case of emergency, call the New York City Hotline at 311. Again, the emergency number is 311."

(c) Computer Equipment - Computers shall be provided for all contracts regardless of construction duration.

Computers furnished by the Contractor for use by City Personnel, for the duration of the contract, shall be in accordance with Table I - ADDITIONAL SPECIFIC REQUIREMENTS, contained herein, and shall meet the following minimum requirements:

(1) Personal Computer(s) - Workstation Configuration.

(a)	Make and Model:	Dell; HP; Gateway; Acer; or, an approved equivalent. (Note: an approved equivalent requires written approval of the Assistant Commissioner of ITS.)
(b)	Processor:	i5 (4MB Cache, 3.0GHz) or faster computer – Dual Processor.
(c)	System Ram:	Minimum of 16GB (Gigabytes) Dual Channel DDR3 SDRAM at 1333MHz – 2 DIMMSs
(d)	Hard Disk Drive(s):	500 GB (Gigabytes) Serial ATA (7200RPM) w/DataBurst Cache, or larger.
(e)	CD-RW:	Internal CD-RW, 48x Speed or faster.
(f)	16X DVD+/-RW	DVD Burner (with double layer write capability) 16x Speed or faster
(g)	I/O Ports:	Must have at least one (1) Serial Port, one (1) Parallel Port and three (3) USB Ports.
(h)	Video Display Card:	HD Graphics (VGA, HDMI) with a minimum of 64 MB of RAM.
(i)	Monitor:	22" W, 23.0 Inch VIS, Widescreen, VGA/DVI LCD Monitor.
(j)	Available Exp. Slots:	System as configured above shall have at least two (2) full size PCI Slots available.
(k)	Network Interface:	Integrated 10/100/1000 Ethernet card.
(l)	Other Peripherals:	Optical scroll Mouse, 101 Key Keyboard, Mouse Pad and all necessary cables.
(m)	Software Requirements:	Microsoft Windows 10 Professional, 32 or 64 bit; Microsoft Office Professional 365 ; Microsoft Project 365 ; Basic Adobe Acrobat Package ; Anti-Virus software package with 2 year updates

subscription; and, either Auto Cad LT or Microsoft Visio Standard Edition, as directed by the Engineer.

(2) All field offices requiring computers shall be provided with the following:

(a) One (1) broad-band internet service account. Wideband Internet connectivity at a minimum throughput of 15 Mbps download and 5 Mbps upload is required at each field office location with 1-5 staffers. For larger field offices see table below for minimum required upload speeds. Telephone service should be bundled together with Internet connectivity. Because of throughput requirements Verizon FIOS is the preferred connectivity provider where available.

Office Personnel #	Upload Speeds (*Minimum*)
1 – 5	10 Mbps
6 – 10	20 Mbps
11 – 15	25 Mbps
16 – 20	50 Mbps

This account will be active for the life of the project. The e-mail name for the account shall be the DDC Field Office/project Id (-preferably Gmail or Outlook – e.g. HWK666@gmail.com).

(b) All necessary Cabling.

(c) Storage Boxes for and Blank CDs/DVDs.

(d) UPS/Surge Suppressor combo.

(e) 10 USB Thumb (or Flash) Drive – 16GB each

(3) All computers required for use in the Engineer's Field Office shall be delivered, installed, and setup in the Field Office by the Contractor.

(4) All Computer Hardware shall come with a three (3) year warranty for on-site repair or replacement. Additionally, and notwithstanding any terms of the warranty to the contrary, the Contractor is responsible for rectifying all computer problems or equipment failures within one (1) business day.

(5) An adequate supply of blank CDs/DVDs, and paper and toner cartridges for the printer shall be provided by the Contractor, and shall be replenished by the Contractor as required by the Engineer.

(6) It is the Contractor's responsibility to ensure that electrical service and phone connections are also available at all times; that is, the Field Office Computer(s) is to be powered and turned on twenty-four (24) hours each day.

Broadband connectivity is preferred at each field office location. Please take into consideration that an extra phone line dedicated to the modem must be ordered as part of the contract unless Internet broadband connectivity, via Cable or FiOS, is available at the planned field office location. Any questions regarding this policy should be directed to the Assistant Commissioner of Information Technology Services at 718-391-1761.

(d) Data Books - A copy of The AED Green Book, latest edition, published by Machinery Information Division of K-III Directory Corporation, 1735 Technology Drive, Suite 410, San Jose, California 95110-1313, shall be provided for all contracts that have a total Consecutive Calendar Days for General Construction duration as set forth in Schedule A of greater than 365 CCD's. Contracts of lesser duration shall not require any data books.

(D) Field Testing Equipment.

(a) 2 - Air Entrainment Meters - Pressure Type, with carrying case for use by City personnel. Each meter shall be capable of producing an accurate test result in approximately five (5) minutes and shall comply with ASTM Designation C 231.

(b) 2 - Slump Test Sets - Slump cone and test sets conforming to the requirements of ASTM Designation C 143, complete with rod and scoop for use by City personnel.

(c) Thermometers: For use by City personnel.

(1) 1 - Minimum-maximum thermometer.

(2) 3 - Asphalt thermometers of stainless steel construction with an accuracy of 0.5% of the full scale, able to measure temperatures from 50 to 500 degrees F. in 5 degree increments.

(3) 3 - Surface Thermometers able to measure temperatures of flat surfaces similar to Sargent-Welsh Model S81441-D, or an approved equivalent.

(d) Nonsparking Pinch Bar - For use in opening manholes.

(e) Gas Meters - For use in detecting the presence of explosive gases and vapors for use by City personnel.

(f) Straight Edge - One 10 foot long straight edge for use by City personnel in detecting pavement surface tolerance.

(g) 48" Smart Level - For use in determining pedestrian ramp and sidewalk slopes.

(h) Chlorine Test Kits – For testing residual chlorine levels following water main flushing.

(i) Green Florescent Power Trace-Dye – For testing sewer connections.

(j) One Million Candlepower Rechargable Flashlight.

(k) Distance Measuring Wheel – For measuring long distances.

6.40.3. SPECIFIC REQUIREMENTS FOR ENGINEER'S FIELD OFFICE (TYPE A, B, C, CU, D, OR DU). In addition to the general requirements, each type of Field Office shall have the minimum floor area indicated in Table 6.40-I calculated based on usable area only, excluding any loss factors. Loss factors are defined as those areas such as lobby, sidewalk window ledge, elevator shafts and stairways. The Contractor shall provide and maintain furnishings for each type of Field Office in the quantity specified in Table 6.40-I. The furnishings shall be new or used equipment satisfactory to the Engineer:

(a) Each Type shall have a minimum of one outside door and four windows.

(b) Type C shall be partitioned to provide three (3) rooms.

(c) Type CU shall be partitioned to provide four (4) rooms, one of which shall be at least 150 s.f. in area (for use by private utilities).

(d) Type D shall be partitioned to provide four (4) rooms.

(e) Type DU shall be partitioned to provide five (5) rooms, one of which shall be at least 150 s.f. in area (for use by private utilities).

TABLE 6.40-I
ADDITIONAL SPECIFIC REQUIREMENTS

SPECIFIC REQUIREMENTS	FIELD OFFICE TYPE					
	A	B	C	CU	D	DU
Minimum useable floor space (Square Feet)	400	800	1200	1200	1,800	1,800
Office desks, at least 4'-8" x 2'-8", with drawers, locks, and keys.	2	2	4	8*	8	12*
Swivel chairs, with arms, for the above.	2	2	4	8*	8	12*
Office folding chairs, metal, with padded seats and backs.	2	3	6	14**	8	16**
Steel supply cabinets (approximate size 72" high by 36" wide by 18" deep), with four adjustable shelves, tumbler lock and 3 keys.	1	1	1	1	1	1
Fire resistant cabinet, 4-drawer, legal size with lock and three (3) keys, meeting the requirements for "Filing devices, Insulated (36 E 9)" Class D Label, of the Underwriters' Laboratories, Inc. Specifications.	1	1	1	3***	4	6***
Individual lockers (17" wide x 18" deep x 72" high) with flat key locks and two (2) keys each.	1	1	4	4	4	4
Calculating machines, tape type with digital display registering at least ten (10) digits.	1	1	2	2	3	3

Waste paper baskets (metal, approximately 12" square by 16" high).	1	2	2	6*	4	8*
Fire extinguishers, non-toxic, dry chemical type meeting Underwriters Laboratories, Inc., approval for Class A, Class B and Class C fires with a minimum rating of 2A:IOB:10C.	1	1	2	3****	4	5****
First Aid Kit kept properly stocked with appropriate first aid supplies at all times.	1	1	1	1	2	2
Drafting tables (3'-0" x 5'-0") with storage drawers and stool.	1	2	2	3****	4	5****
Photocopying Machine – Stand-alone, heavy duty, electric, dry-process color photocopying type with color scan and send capability via e-mail, a minimum production rate of 70 pages per minute and an adequate supply of copy paper, toner, etc. The machine shall be capable of duplex copying paper sizes of 8-1/2 x 11 inches, 8-1/2 x 14 inches and 11 x 17 inches, and have separate trays for each paper size. It shall have a document feeder, collator, stapler, and the capability to reduce/enlarge copies between each paper size. The supply of each size copy paper, toner, etc. shall be replenished and the machines shall be maintained for the duration of the contract by the Contractor as required by the Engineer. Make and model can be Minolta, Canon, IBM, Epson, or an approved equivalent, and shall be networked to the office computers for printing capability.	1	1	1	1	1	1
Standalone networked color laser printer. (Not required if photocopying machine prints in color)	XX	XX	XX	XX	XX	XX
Vertical filing plan racks for six sets of 22"x36" plans each rack.	1	1	2	3****	4	5****
Telephone lines for calls, where one shall be dedicated for the Fax Machine, one for each computer fax/modem and the others for telephone instruments.	4	6	6	7‡	8	9‡
Telephone instruments.	2	2	3	5‡	4	6‡
Telephone answering machine.	1	1	1	1	1	1
Fax Machine - With an adequate supply of copy paper, toner, etc. The supply of copy paper, toner, etc. shall be replenished and the machines shall be maintained for the duration of the contract by the Contractor as required by the Engineer.	1	1	1	1	1	1
Personal Computer - Workstation Configuration	1	3	3	3	4	4
Bottled water with refrigerator unit-hot/cold water. (For private utilities room.)				1		1
Heavy duty commercial grade diamond cut shredder with automatic start. The shredder shall be able to receive 8-1/2 inch wide paper and shred a minimum of 15 sheets simultaneously along with CDs and staples.	1	1	1	1	1	1
Projector – 1080p LCD with a min. of 2200 ANSI Lumins, 1920 x 1080, 16:9, 40,000:1 contrast ratio, HDMI, VGA, USB, and a 10 feet diagonal, 16:9 Projection Screen.	-	-	1	1	1	1

‡ *Provide one (1) telephone line and two (2) telephone instruments for the exclusive use by private utilities personnel. The line shall interconnect the two telephone instruments by push button control.*

* *Provide four (4) each of Office Desks, Swivel Chairs and Waste Paper Baskets in private utilities room.*

** *Provide eight (8) Folding Chairs in private utilities room.*

*** *Provide two (2) Fire Resistant 4- Drawer Legal Size Cabinets in private utilities room.*

**** *Provide one (1) each of Fire Extinguisher, Drafting Table and Vertical File Rack in private utilities room.*

6.40.4. CONSTRUCTION METHODS. The building shall be fully equipped and made available for use and occupancy by the Department's personnel and/or Supervision Consultant not less than thirty (30) days prior to the start of any contract work.

The building interior (including access foyers, stairwells, etc.) shall be maintained in good, clean, and sanitary working condition by the Contractor for the duration of the contract. The Contractor shall provide and pay all costs for electrical service, telephone service for calls within New York City limits, hot and cold water, heat and fuel, and daily janitor service. Staples, such as paper towels, hand soap, toilet paper, and similar supplies, shall always be available.

Where necessary, the site for a mobile trailer(s) shall be graded and shoulder stone placed and maintained as directed by the Engineer to provide a parking area for City personnel and, if necessary, an approach road shall be provided. Plumbing work shall include all water supply, drainage and piping required for the operation of a complete installation. Temporary water service shall be provided from an existing main and extended into the trailer and all fixtures requiring water supply shall be properly connected up. All necessary soil, waste, vent and drainage piping shall be provided and connected to the existing sewer or as otherwise directed.

The office, incorporated facilities, equipment, and personal property of the Department's employees shall be protected by the Contractor against loss or damage from fire, theft, or other causes, at all hours of the day and night. The Contractor shall provide fire insurance, extended coverage and vandalism, malicious mischief and burglary, and theft insurance coverage in the amount of forty thousand dollars ($40,000.00) for office equipment of the City of New York in the Engineer's field office and for property of City personnel that is used in the contract work and stored in the office. All insurance coverage shall be written by a company approved by the Commissioner and payable in case of loss to the City of New York. The office shall be maintained by the Contractor in first class condition until final acceptance of the work.

At the direction of the Engineer, any equipment on the above lists may be deleted. He may direct that other equipment of equivalent value be supplied by the Contractor or an appropriate credit be taken for the value of equipment not provided.

When directed by the Engineer, the Contractor shall disconnect all services and remove and dispose of all temporary installations from the site, including fencing, surfacing and utilities, the area shall then be cleaned, loamed and seeded if required and left in a neat and acceptable condition. On and after the date of the Engineer's Final Acceptance, the temporary structure and all installed equipment shall become the property of the Contractor, and shall be disposed of, by him, away from the site of the work. Engineer's Final Acceptance shall be when the Contractor has completed all punch list work and Official Completion Date has been set.

6.40.5. NONCONFORMANCE. No payment will be made under Engineer's Field Office for each calendar day during which there are deficiencies in compliance with the requirements of any subsection of this specification. The first calendar day shall commence twenty-four (24) hours after notice to the Contractor of such a deficiency. This non-payment shall be deducted from the Contractor's next estimate as a charge to the Contractor on the item. The amount of such calendar day non-payment will be determined by dividing the unit price bid per month by 30.

In addition, the Contractor may be subject to liquidated damages in accordance with Schedule A.

6.40.6. MEASUREMENT. The quantity to be measured for payment under this item shall be the number of months that the Field Office is available for occupancy by the Field Engineers during the period of the contract. Payment will begin the first month that the office is fully equipped, serviced as specified, and made available for occupancy. The Field Office is to be continuously made available and Monthly payments will continue for the duration of the contract through a period not to exceed 6 months past the substantial completion date. When directed in writing by the Commissioner, the Field Office will be provided and paid for a period of time beyond 6 months past the substantial completion date. Payment for each month's occupancy after the date of substantial completion acceptance will be made as part of the final estimate. Monthly payments may be terminated on a specified date prior to acceptance of the contract by written notification by the Engineer that such office will no longer be required on the contract.

6.40.7. PRICE TO COVER. The unit price bid per month for the item Engineer's Field Office shall include the cost of furnishing all labor, materials, equipment, ground rental, fire and theft insurance, and utility charges necessary to complete the work of providing or constructing the field office; making all necessary electrical, water, sewer, and other connections required to make the above facilities operative; payment of all rental costs; furnishing and paying for heating fuel, as required; all electrical energy;

private telephone services; staples, as specified; and all necessary incidentals to complete the work - all in accordance with the specifications and the directions of the Engineer.

Payment will be made under:

Item No.	Item	Pay Unit
6.40 A	ENGINEER'S FIELD OFFICE (Type A)	MONTH
6.40 B	ENGINEER'S FIELD OFFICE (Type B)	MONTH
6.40 C	ENGINEER'S FIELD OFFICE (Type C)	MONTH
6.40 CU	ENGINEER'S FIELD OFFICE (Joint Use) (Type CU)	MONTH
6.40 D	ENGINEER'S FIELD OFFICE (Type D)	MONTH
6.40 DU	ENGINEER'S FIELD OFFICE (Joint Use) (Type DU)	MONTH

(NO TEXT THIS PAGE)

Department of Design and Construction	**SPECIFICATION BULLETIN**	**SB 17-004**

Title: **FIRE DEPARTMENT FACILITIES**

Prepared:	Approved:
1/12/2017	1/12/2017
Richard Jones, P.E. CWI — Date	Mohsen Zargarelahi, P.E. — Date
Director, Specifications – Infrastructure Design	Assistant Commissioner – Infrastructure Design

APPLICABILITY:

- This Specification Bulletin (SB) is effective for projects advertised on or after 2/20/17.

SUPERSEDENCE:

- This SB supersedes the following SBs: **NONE**

ATTACHMENTS:

NONE

REVISIONS TO THE NEW YORK CITY DEPARTMENT OF TRANSPORTATION STANDARD HIGHWAY SPECIFICATIONS VOLUME 1 OF 2, DATED 8/1/15:

No Changes.

REVISIONS TO THE NEW YORK CITY DEPARTMENT OF TRANSPORTATION STANDARD HIGHWAY SPECIFICATIONS VOLUME 2 OF 2, DATED 8/1/15:

All references contained below are to the New York City Department of Transportation Standard Highway Specifications, Dated August 1, 2015. Said Standard Highway Specifications are hereby revised as follows:

a) **Refer** to Page 332, Section 6.23 – Fire Department Facilities, Subsection 6.23.4.(A), 3rd paragraph;
Delete the words "Bureau of Fire Communications";
Substitute the words "Bureau of Facilities Management".

b) **Refer** to Page 332, Section 6.23 – Fire Department Facilities, Subsection 6.23.4.(A), 9th paragraph;
Delete the words "Bureau of Fire Communications";
Substitute the words "Bureau of Facilities Management".

c) **Refer** to Page 332, Section 6.23 – Fire Department Facilities, Subsection 6.23.4.(A), 9th paragraph;
Delete the words "(718) 624-4194";
Substitute the words "(718) 281-3846".

d) **Refer** to Page 333, Section 6.23 – Fire Department Facilities, Subsection 6.23.4.(E), 1st paragraph;
Delete the words "Bureau of Fire Communications";
Substitute the words "Bureau of Facilities Management".

e) **Refer** to Page 339, Section 6.23 – Fire Department Facilities, Subsection 6.23.6, 1st paragraph;
Delete the words "Bureau of Communications";
Substitute the words "Bureau of Facilities Management".

f) **Refer** to Page 343, Section 6.23 – Fire Department Facilities, Subsection 6.23.6.(I);
Delete the words "steel bar reinforcement and".

g) **Refer** to Page 440, Section 6.70 – Maintenance and Protection of Traffic, Subsection 6.70.9.(D);
Delete the words "Bureau of Fire Communications";
Substitute the words "Bureau of Facilities Management".

(NO FURTHER TEXT)

Department of Design and Construction	**SPECIFICATION BULLETIN**	**SB 17-005**

Title: **DIGITAL PHOTOGRAPHS**

Prepared:	Approved:
1/12/2017	1/12/2017
Richard Jones, P.E. CWI — Date	Mohsen Zargarelahi, P.E. — Date
Director, Specifications – Infrastructure Design	Assistant Commissioner – Infrastructure Design

APPLICABILITY:

- This Specification Bulletin (SB) is effective for projects advertised on or after 2/20/17.

SUPERSEDENCE:

- This SB supersedes the following SBs: **NONE**

ATTACHMENTS:

- **ATTACHMENT 1:** Revised Section 6.43 – PHOTOGRAPHS
  Pages A1-1 through A1-4

REVISIONS TO THE NEW YORK CITY DEPARTMENT OF TRANSPORTATION STANDARD HIGHWAY SPECIFICATIONS VOLUME 1 OF 2, DATED 8/1/15:

All references contained below are to the New York City Department of Transportation Standard Highway Specifications, Dated August 1, 2015. Said Standard Highway Specifications are hereby revised as follows:

a) **Refer** to Page 37, Section 1.06.45 – Progress Photographs;
Delete in its entirety the Section;
Substitute the following: "NO TEXT."

REVISIONS TO THE NEW YORK CITY DEPARTMENT OF TRANSPORTATION STANDARD HIGHWAY SPECIFICATIONS VOLUME 2 OF 2, DATED 8/1/15:

All references contained below are to the New York City Department of Transportation Standard Highway Specifications, Dated August 1, 2015. Said Standard Highway Specifications are hereby revised as follows:

b) **Refer** to Page 385, Section 6.43 - Photographs;
Delete in its entirety the Section;
Substitute the revised Section in Attachment 1 (4 pages).

Department of Design and Construction	**SPECIFICATION BULLETIN**	**SB 17-005**
Title: **DIGITAL PHOTOGRAPHS**		

REVISIONS TO THE NEW YORK CITY DEPARTMENT OF ENVIRONMENTAL PROTECTION STANDARD SEWER AND WATER MAIN SPECIFICATIONS, DATED 7/1/14:

All references contained below are to the New York City Department of Environmental Protection Standard Sewer and Water Main Specifications, Dated July 1, 2014. Said Standard Sewer and Water Main Specifications are hereby revised as follows:

a) **Refer** to Page I-16, Section 10.32 – PHOTOGRAPHS;
Delete in its entirety the Section;
Substitute the revised Section:

"The Contractor shall be required to provide "PHOTOGRAPHS" in accordance with **New York City Department of Transportation (NYCDOT) Standard Highway Specifications Section 6.43 – Photographs.**"

SECTION 6.43 – Photographs

6.43.1. **INTENT.** This section describes the work of providing a photographic record of contract work.

6.43.2. **DESCRIPTION.** The work shall consist of the furnishing of all required photographic equipment and materials; the taking of digital photographs; making prints from digital files; and submitting prints and digital files to the Engineer.

6.43.3. **MATERIALS.**

(A) PRINTS

Prints shall be 7-1/2" x 9-1/2" image area on 8" x 10" single-weight, gloss paper, and shall be in color. Prints shall be inserted in standard weight Archival Quality clear poly sheet protectors and submitted in a hard cover three (3) ring binder. The following information shall be imprinted, or indelibly printed, on a white border measuring no more than one and one half (1-1/2") inch at the bottom of the front of each photograph:

(a) Contract Number and Job Location
(b) Photograph Number
(c) View and Description - (Indicating a general description of what the photograph represents)
(d) Photograph Type: Preconstruction Photograph or Construction Progress Photograph
(e) Date - (The date the photograph was taken.)
(f) Address – street address where photograph was taken
(g) Borough
(h) Street Segment ID
(i) Name of Photographer
(j) Department Witness

The Contractor shall furnish to the Commissioner one (1) set for each view taken, each set consisting of two (2) 8" x 10" prints and one (1) digital file.

All prints and digital files shall become the property of the Commissioner. All completed prints and digital files shall be delivered to the Engineer within two (2) weeks after the photographs have been taken. Approved binders for the clear poly sheet protectors containing all materials shall be furnished by the Contractor and delivered to the designated construction office at the time of the initial submission of prints and DVDs at such other times as may be required thereafter.

(B) DIGITAL FILES

Digital files shall be captured as 7.2 megapixel files or greater, with a minimum pixel array of 2,400 pixels by 3,000 pixels. The camera used to capture the digital files shall be a Digital SLR (Single Lens Reflex) camera or approved equal; "point and shoot" cameras or cameraphones are not acceptable. Digital cameras shall produce images using true optical resolution; "digital zoom" is not acceptable. Images shall not be resized or interpolated. The file format for digital files shall be Joint Photographic Experts Group format ("JPG"). The digital files shall not be modified or processed in any way to alter the JPG file's metadata, including the photograph's original capture date.

Digital files shall be submitted on Digital Versatile Disk ("DVD"). DVDs shall be inserted in standard weight Archival Quality clear poly sheet protectors, and submitted in a hard cover three (3) ring binder. The information imprinted on each print shall be provided on an Excel file included on the DVD. The DVD shall be labeled with the Project ID and the geographical area and streets depicted in the photographs. Labeling using adhesive labels is not acceptable.

Digital files shall have file names in the following format: a^b^c^d^e^f.JPG, where "a" through "f" are as follows:

(a) Contract Number
(b) Photograph Number
(c) Date, in YYYY-MM-DD format (The date the photograph was taken.)
(d) Address – street address where photograph was taken
(e) Borough
(f) Street Segment ID

A sample file name would be "HBX123^0021^2016-04-19^123 Main St^Queens^55555.JPG"

The files on the DVD shall be organized in folders by Photograph Type and Street Segment ID as follows:

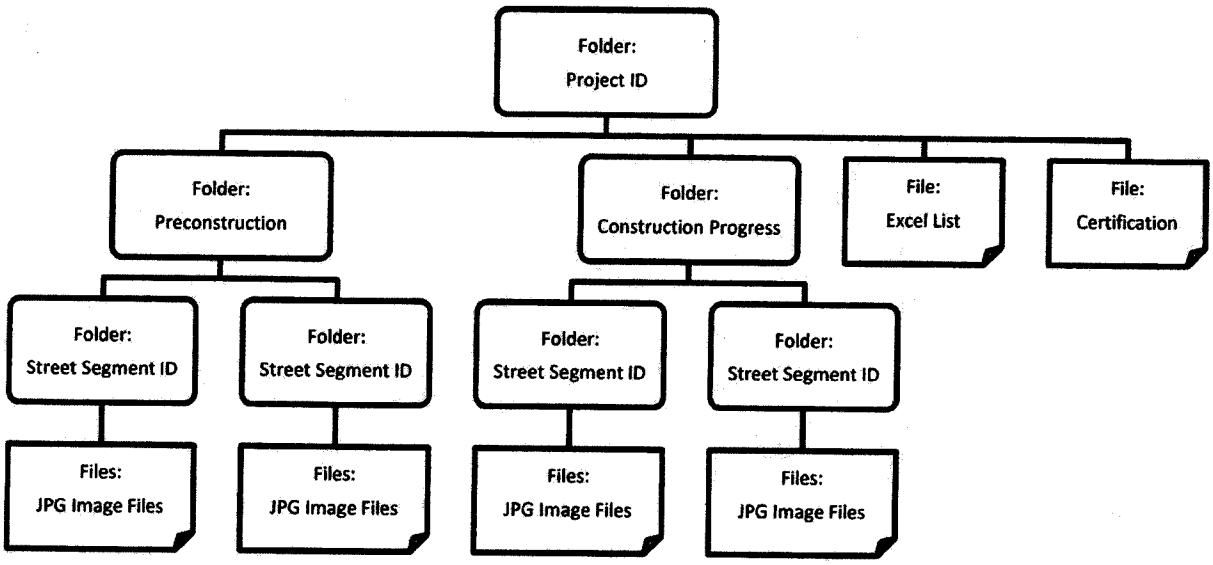

(C) CERTIFICATION

The Photographer shall provide a signed certification that the files on the DVD are unaltered and are an accurate representation of the subject photographed. The original certification, in a clear poly sheet protector, shall be submitted with the prints and digital files, and a scanned copy shall be included on the DVD.

6.43.4. METHODS. The Contractor shall employ and pay for the services of a competent Professional Photographer who, at the direction of the Commissioner or his authorized representative, shall take Preconstruction Photographs and Construction Progress Photographs and such other photographs which may be required during the period of the contract.

The Photographer shall be available for taking the required photographs within forty-eight (48) hours after receiving notification from the Commissioner or his authorized representative.

Photographs shall be taken under the supervision and direction of the Engineer. The Engineer reserves the right to reject any and all views that are not reasonably clear and definitive. No separate or additional payment will be made for any additional photographs that are required as a result of the rejection of views.

6.43.5. PRECONSTRUCTION PHOTOGRAPHS. Preconstruction Photographs shall show the conditions existing on the work site prior to the commencement of the contract work. The Preconstruction Photographs will generally represent views of:

- The original surface conditions of streets, curbs and walks, and buildings;
- Evidence of damage, disrepair, or emergency situations;
- All encumbrances and/or encroachments which may be affected by the construction of the proposed work.

When there is no pay item listed in the Bid Schedule, the number of Preconstruction Photographs shall be as follows:

(A) Highway Street Reconstruction projects: 150 sets per million dollars of street reconstruction work;

(B) Highway Resurfacing projects: 4 sets per 250 linear feet of roadway for resurfacing work;

(C) Sewer and Water Main projects: 2 sets (1 set each side of street) per 25 linear foot of sewer and water main.

When there is an item listed in the Bid Schedule, the quantity to be measured for payment shall be the number of sets, each set consisting of a digital file and the two (2) prints made from the digital file, of Preconstruction Photographs including photographs showing the original condition of all encumbrances and/or encroachments which may be affected by construction of the proposed work, and which are delivered as directed by the Engineer.

6.43.6. CONSTRUCTION PROGRESS PHOTOGRAPHS. Construction Progress Photographs shall show the conditions existing during the progress of, and at the completion of the contract work. The photographs will generally represent views of the work under construction and completed work. Construction Progress Photographs shall be taken monthly and upon completion of the work.

The approximate number of Construction Progress Photographs is as follows:

(A) Highway reconstruction and resurfacing projects: Minimum 2 sets per 250 linear feet of roadway under construction or completed in the last month.

(B) Pedestrian ramps on all projects: Minimum of 1 set for every pedestrian ramp under construction or completed in the last month, in addition to other progress photographs.

(C) Sewer and Water Main projects: Minimum of 4 sets for every 100 feet of sewer or water main under construction.

No separate payment will be made for Construction Progress Photographs. The cost of taking and providing sets of Construction Progress Photographs shall be included in the prices bid for all other items of work.

6.43.8. PRICE TO COVER (PRECONSTRUCTION PHOTOGRAPHS ONLY). When there is an item listed in the Bid Schedule, the contract price bid per set shall cover the cost of furnishing all labor, materials, plant, equipment, insurance, and necessary incidentals required, including the cost of the photographer, and the cost of furnishing the required prints, digital files, DVDs, and ring binders, and completing the work in accordance with the specifications and the directions of the Engineer.

When there is no item listed in the Bid Schedule, no separate payment will be made. The cost of furnishing all labor, materials, plant, equipment, insurance, and necessary incidentals required, including the cost of the photographer, and the cost of furnishing the required prints, digital files, DVDs, and ring

binders, and completing the work in accordance with the specifications and the directions of the Engineer shall be included in the prices bid for all other items of work.

Payment will be made under:

Item No.	Item	Pay Unit
6.43 D	DIGITAL PHOTOGRAPHS	SETS

Department of Design and Construction	**SPECIFICATION BULLETIN**	**SB 17-006**

Title: **RECORDS OF SUBSURFACE STRUCTURES**

Prepared:	Approved:
1/12/2017	1/12/2017
Richard Jones, P.E. CWI — Date	Mohsen Zargarelahi, P.E. — Date
Director, Specifications – Infrastructure Design	Assistant Commissioner – Infrastructure Design

APPLICABILITY:

- This Specification Bulletin (SB) is effective for projects advertised on or after 2/20/17.

SUPERSEDENCE:

- This SB supersedes the following SBs: **NONE**

ATTACHMENTS:

NONE

REVISIONS TO THE NEW YORK CITY DEPARTMENT OF TRANSPORTATION STANDARD HIGHWAY SPECIFICATIONS VOLUME 1 OF 2, DATED 8/1/15:

All references contained below are to the New York City Department of Transportation Standard Highway Specifications, Dated August 1, 2015. Said Standard Highway Specifications are hereby revised as follows:

a) **Refer** to Page 9, Section 1.06.18 – Records of Subsurface Structures, Etc.;
Delete the first two paragraphs;
Add the following paragraph to the beginning of the Section:

"The Contractor stipulates that it has the obligation to examine and review any and all available documents and other sources of information concerning the condition of the sub-soil materials, subsurface conditions and existing subsurface structures of bridges, pipes, tunnels, conduits, sewers, foundations, bulkhead walls and other subsurface structures and stipulates that it has made such investigation and research as it deems necessary. To the extent the Contractor incurs delays or damages based on sub-soil materials, subsurface conditions and existing subsurface structures that were known or reasonably could have been known to the Contractor through such available documents or other sources of information, the Contractor will make no claim for such delays or damages."

(NO TEXT THIS PAGE)

I - PAGES

NEW SECTIONS

NOTICE

UNLESS OTHERWISE NOTED, ALL SECTIONS, SUBSECTIONS, ARTICLES, OR SUBARTICLES AS REFERRED TO HEREIN WITHIN THESE NEW SECTION SPECIFICATIONS SHALL BE THOSE OF THE NEW YORK CITY DEPARTMENT OF TRANSPORTATION'S (NYCDOT'S) CURRENT STANDARD HIGHWAY SPECIFICATIONS WITH CURRENT ADDITIONS, MODIFICATIONS AND REVISIONS TO THE STANDARD HIGHWAY SPECIFICATIONS (R-PAGES).

THE STANDARD HIGHWAY SPECIFICATIONS ARE NOT INCLUDED IN THESE I-PAGES. SEE THE NYCDOT STANDARD HIGHWAY SPECIFICATIONS BOOKS FOR STANDARD SPECIFICATIONS TEXTS.

(NO TEXT ON THIS PAGE)

TABLE OF CONTENTS

SECTION	DESCRIPTION	PAGE NO.
4.04MM	PROCEDURE FOR ESTIMATING CONCRETE STRENGTH BY THE MATURITY METHOD (NOT A PAY ITEM)	I-1
6.18 W	WICKET FENCE	I-5
6.27 DBH	DEMOLITION, REMOVAL AND DISPOSAL OF BENCHES	I-7
6.29 TTM	TEMPORARY TUBULAR MARKERS	I-8
6.59 PF	TEMPORARY CONCRETE BARRIER WITH FENCE	I-10
6.97 A	EXTRA-HIGH EARLY STRENGTH CONCRETE BASE	I-12
7.50 CB2	CITYBENCH (VERSION 2)	I-15
PK-444GP	GRANITE PLINTH WITH PLAQUE	I-18

(NO TEXT ON THIS PAGE)

SECTION 4.04 MM
(NOT A PAY ITEM)
PROCEDURE FOR ESTIMATING CONCRETE STRENGTH BY THE MATURITY METHOD

4.04MM.1. DESCRIPTION. The Maturity Method is a non-destructive procedure for estimating concrete strength and shall be used to determine when to open the concreted area to traffic. The requirements of this section shall apply to all concrete placed under Item No 6.97 A and in accordance with **Section 6.97 A - Extra-High-Early Strength Concrete Base**.

The Maturity Method will not be used by the Department for accepting the strength of a concrete. Strength testing by destructive means will still be used by the Department for strength acceptance.

Maturity will not be used to decrease curing times.

4.04MM.2. PROCEDURE FOR DEVELOPING A MATURITY CURVE. For each proposed mix design develop the maturity curve in accordance with ASTM C1074. Make 6" x 12" cylinders and base the curve on compressive strength.

(A) Make all specimens from the same batch of concrete. Batch size shall be at least 3-cubic yards. Mix using the same materials, mix design and mixing technique that will be used for concrete on the project. Use the same mixing equipment when possible. Mix at the maximum w/c ratio of the design. Mix at or within 0.5% of the maximum air content of the design. Additional maturity curves similar to the curves which are part of the eleven (11) pages of attachments (Suggested Mix Design For Extra-High-Early Strength Concrete Base) to **Section 6.97 A - Extra-High-Early Strength Concrete Base**, but limited to 28-days, can be made from different batches using the same mix design at lower w/c ratios and air contents, and these additional maturity curves can be used for interpolating concrete strength estimations if it can be shown that the concrete delivered to the project was at a lower w/c or lower air content.

(B) Determine the plastic properties of the batch by performing slump, air content, unit weight, and concrete temperature before making specimens. Determine slump in accordance with ASTM C143, air content in accordance with ASTM C231 or ASTM C173, unit weight in accordance with ASTM C139, temperature in accordance with ASTM C1064, shrinkage in accordance with ASTM C157, and freeze/thaw in accordance with NYSDOT Method 502-3P.

(C) Make a minimum of seventeen (17) specimens in accordance with ASTM C192. Embed sensors in the center of two (2) of the specimens. Moist cure all specimens in a temperature controlled water bath or in a moist room meeting the requirements of ASTM C511. Test cylinders in accordance with ASTM C39. Do not test cylinders with sensors embedded in them. For high early strength concrete and for extra-high-early strength concrete, test when strengths are approximately equal to 30%, 60%, 75%, 85%, and 100% of the design strength. Additional specimens can be made and tested at other ages as well as unused specimens to help define the maturity curve.

(D) At a minimum, personnel making cylinders and performing slump, air content, unit weight, and concrete temperature shall be ACI certified as Concrete Field Testing Technicians,

Grade I, and personnel testing cylinders for compressive strength shall be ACI certified as Concrete Strength Testing Technicians.

(E) Use digital data-loggers in conjunction with a commercial maturity instrument that automatically computes and displays maturity. Develop the curve using the temperature-time factor maturity function. Use a value of 32° F (0° C) for T_o (datum temperature) unless a more accurate value is determined in accordance with Annex A1 of ASTM C1074.

4.04MM.3. ACCEPTANCE OF A MATURITY CURVE BY THE DEPARTMENT. For each mix design submit the maturity curve, mix design, material sources, plastic test results, strength test results, data, calculations and method used for monitoring maturity in the laboratory to the Engineer. The Department will require thirty (30) days to evaluate the results for acceptance.

4.04MM.4. USING CONCRETE MATURITY IN THE FIELD. Estimating concrete strength by maturity is acceptable when the concrete is batched using the same materials (including admixtures), material proportions, mix design, and mixing technique as that of the batch used to develop the maturity curve. The curve can be used on the project to estimate concrete strength if the w/c ratio of the concrete used on the project is less than or equal to the w/c ratio used to develop the curve.

(A) Use digital data-loggers in conjunction with a commercial maturity instrument that automatically computes and displays maturity to monitor field placed concrete. Use the time-temperature maturity function. Use the same value for T_o (datum temperature) that was used to develop the maturity curve.

(B) Install at least one (1) sensor for every 3,600-square yards of concrete base (or fraction thereof) with the sensor representing the last 3,600-square yards of concrete pavement (or fraction thereof) installed in the last load of concrete mixed and placed that day. Install at least one (1) additional sensor each day in concrete that is placed within the last four (4) hours of work that day where maturity gain is expected to be the slowest. Maturity gain typically is expected to be the slowest in the thinnest section of pavement. If all sections of pavement have the same dimensions and no section is expected to gain maturity slower, place the additional sensor in any section of pavement constructed from the second to last load of concrete mixed and placed that day.

(C) Install additional sensors when necessary for accurately determining the maturity of a concrete or as directed by the Engineer.

(D) Provide one (1) sensor to the Engineer for random placement at the Department's discretion for every ten (10) sensors the Contractor is required to install. If the number of sensors installed by the Contractor exceeds the minimum required by these specifications, the number of sensors above the minimum will not be counted as required sensors.

(E) When installing sensors, use a placement strategy that targets areas where the concrete is expected to gain maturity the slowest. Place sensors near the fringes, in thinner sections, or in shaded areas where the concrete will be cooler. Do not place sensors in the center of the pour where the concrete will be the hottest. Typical sensor placement should be one (1) foot from an edge or corner and six (6) inches below the surface, but try to maintain at least six (6) inches of cover in each direction. At a minimum, install sensors with at least three (3) inches of cover in each direction. Use traditional methods in lieu of

maturity if the least dimension of a concrete is less than six (6) inches (i.e. if three (3) inches of cover cannot be maintained in each direction) because ambient conditions may affect the sensor causing maturity readings from that sensor to be inaccurate.

(F) Provide the Engineer with one (1) set of the same maturity monitoring equipment reader that the Contractor will be using on the project so that DDC can independently monitor concrete maturity. Provide DDC personnel training on how to operate the equipment. The monitoring equipment will be returned at the completion of the project.

(G) Maintain a separate log for each sensor which includes a unique ID; location; date and time of installation; date and time that the sensor began monitoring maturity; dates and times of all readings taken from the sensor; the corresponding temperature, maturity, and concrete age at each reading; and the date when readings were discontinued. Notify the Engineer immediately with problems or discrepancies with readings or if any sensors are found to be damaged or operating improperly, and document on the log the date and time this determination was made, what the problem is, and the steps taken to correct it. Have the log available for viewing by DDC project personnel at all times and provide an updated copy or the log to DDC project personnel on a weekly basis if the sensor is still in use.

4.04MM.5. VERIFICATION OF THE MATURITY CURVE. Maturity curve verification consists of making test specimens, monitoring the maturity of the specimens, testing the specimens by destructive means to determine the actual strength, and comparing the actual strength determined by destructive testing with the strength estimated by maturity. If the actual strength is the same or greater than the strength estimated by maturity, the curve is verified. If the actual strength is less than the strength estimate by maturity, the curve is not verified. If a curve cannot be verified, it may be an indication of changes or alterations in the mix design, batching procedures, material proportions, or properties in the materials being used, or that the maturity curve being used was not developed correctly.

Perform maturity curve verification weekly to determine if the strength of the concrete being supplied to the project is equal to or greater than the strength estimated by maturity. If four (4) consecutive weekly maturity curve verifications determine that the maturity curve being used is verified, reduce the frequency to once every two (2) weeks.

If maturity curve verification testing does not verify a maturity curve, immediately notify the Engineer, immediately discontinue using maturity for estimating strength, perform an investigation as to why maturity was not able to be verified, and provide the Engineer with a written report detailing why the curve was not verified and what actions will be taken to ensure that maturity will not be compromised in the future. If the Engineer is satisfied with the report and that the problem has been resolved, maturity can be used again on the project with maturity curve verification being performed as directed by the Engineer, but in no case, less than once a week. If future maturity curve verifications determine that the curve is verified, the frequency of maturity curve verification can be decreased at the City's discretion.

Maturity curve verification consists of the following:

(A) Sample concrete from a load or batch being used on the project. If the maturity curve is based on compressive strength, make five (5) 6" x 12" cylinders tor test specimens. Sample in accordance with ASTM C172. Make and cure test specimens in accordance with ASTM C31. At a minimum, personnel sampling and making specimens in the field will be ACI certified as Concrete Field Testing Technicians, Grade I.

(B) Place a sensor in the center of one of the test specimens and monitor maturity.

(C) Test the specimens in pairs and average the results to determine strength. Test the first pair of specimens when maturity readings indicate that the specimens have achieved strength between 50% and 70% of the design strength, and test the remaining pair when maturity readings indicate that the specimens have achieved strength between 85% and 100% of the design strength. Test cylinders in accordance with ASTM C39. Do not test the specimen with the sensor embedded in it. At a minimum, personnel testing cylinders for compressive strength will be ACI certified as Concrete Strength Testing Technicians.

(D) Compare the actual strength determined by destructive testing with the estimated strength determined by maturity to see if the curve is verified or not. If the actual strength is less than the estimated strength, the curve is not verified.

4.04MM.6. MATURITY CURVE LIFE. A maturity curve will be valid for two (2) years from the date the batch used to develop the maturity curve was made provided that the use of the Maturity Method is verified as per **Subsection 4.04MM.5** of this specification. The validity of a maturity curve can be renewed a maximum of two (2) times. Each renewal extends the validity of the curve for one (1) year.

The renewal of a maturity curve requires submission of a written request for renewal in advance of the maturity curve expiration date, submission of all verification data from **Subsection 4.04MM.5**, and acceptance of the data by the Department. Send the renewal request and verification data to DDC's Quality Assurance Department.

4.04MM.7. BASIS OF PAYMENT. No additional payment will be made for compliance with the provisions of this section.

SECTION 6.18 W
WICKET FENCE

6.18 W.1. Description. Under this Section, the Contractor shall furnish and install wicket fence where shown on the plans or directed by the Engineer, in accordance with the plans and specifications.

6.18 W.2. Materials.

(A) Wicket Fence shall be constructed of one-half inch (1/2") diameter solid round plain iron bars. All material shall conform to Specifications C1015 of the A.I.S.I.

The upright portion of each wicket shall be welded to the upright portion of the adjoining wicket, and all intersections of the curved portion of the adjoining wicket, and all intersections of the curved portion shall be firmly welded. All welds shall be ground smooth. All welds and weldments shall conform to the latest requirements of the American Welding Society.

(B) Concrete for footings shall be Class B-32, Type IIA; cement - Type II Portland; sand - Type IA; aggregate Type 1, Grade B, or Type 2, Size No. 57; and an approved air-entraining agent shall be added at the time that concrete is mixed. Concrete, cement and aggregate shall comply with the requirements of Section 3.05 of the Standard Specifications.

(C) Painting. The fence shall receive three (3) coats of paint. First and second coats can be a shop coat immediately after fabrication. The third coat shall be a field coat.

Immediately prior to painting, all surfaces of wicket fence shall be thoroughly clean. All surfaces that are rust free shall be cleaned in accordance with SP-1, Solvent Cleaning. Cleaning shall be performed with a solvent such as mineral spirits, xylol or turpentine to remove all dirt, grease and foreign matter. Surfaces that show evidence of scale and rust shall be cleaned in accordance with SP-2, Hand Tool Cleaning, a method generally confined to wirebrushing, sandpaper, hand scrapers or hand impact tool or SP-3, Power Tool Cleaning, a method generally confined to power wirebrushed, impact tools, power sanders and grinders in order to achieve a sound substrate.

After the fence has been cleaned and prepared, it shall be painted as follows:

First Coat:	Sherwin Williams #E41N1 Metal Primer, as manufactured by Sherwin Williams Company, telephone (718) 426-8813, or approved equal. Primer is an alkyd oil, flat finish coating having a dry film thickness of 3 to 4 Mills. Paint requires 24 hours drying time before recoating. Performance shall meet or exceed the standards of Federal Specification TT-P-86H.
Second Coat:	Sherwin Williams High Solids Alkyd Metal Primer, B50 Series or an approved equal. Primer is an alkyd, low luster coating having a dry film thickness of 3-5 Mils. Paint requires 4 hours drying time before recoating (with alkyds).
Third Coat:	Sherwin Williams Silicone Alkyd Low VOC B56Z Black, or approved equal. Topcoat is a silicon alkyd, high gloss coating having a dry film thickness of 2-4 Mils. Paint requires 16 hours drying time @ 45° F; 8 hours @ 77° F. Paint shall perform in accordance with ASTM G-53.

All paints shall be applied when ambient air temperature is 45° F minimum and rising. No painting will be allowed below the minimum ambient air temperature. Surfaces to be painted shall be moisture free. In addition, no painting will be allowed below the temperature at which moisture will condense on surfaces.

6.18 W.3. Methods of Construction. The various sections of wicket fence shall be assembled and erected in their proper positions, and fastened together by a triple winding of No. 9 galvanized annealed wire, with the ends twisted together, two (2) ties shall be placed on each vertical leg and one (1) tie at each intersection of curved portions of the wickets. Wickets shall be truly vertical. The wickets shall be firmly held in position by the use of concrete footings.

Concrete footings shall be roughly cylindrical in form and approximately six inches in diameter and eight inches in depth. Concrete footings shall be placed at eight foot intervals, at all ends, and at all changes in direction.

6.18 W.4. Submittals.

(A) Shop Drawings. Before the work in the shop is started, the Contractor shall submit shop drawings for approval by the Engineer.

(B) Paint Substitution. A written request for paint substitution must be submitted to the Engineer for approval. The Contractor shall submit its request for approval, along with the manufacturer's data sheets for the proposed paint substitute, a minimum of two weeks prior to the intended date of paint application. All paint substitutes must be approved in writing prior to use.

6.18 W.5. Measurement. The quantity to be measured for payment shall be the number of linear feet of Wicket Fence actually installed in place to the satisfaction of the Engineer. Measurement shall be made in place at grade, along the centerline of the wicket fence and a horizontal plane intersected by the wickets, from center to center of end posts.

6.18 W.6. Price to Cover. The contract price per linear foot of Wicket Fence shall cover the cost of all labor, materials, plant, equipment, and necessary incidentals required to furnish and install Wicket Fence, including, but not limited to, painting of fence, excavation, furnishing and installing of concrete footings, and completing the work in accordance with the plans, the specifications and the directions of the Engineer.

Payment will be made under:

Item No.	Description	Pay Unit
6.18 W	Wicket Fence (12" HIGH)	L.F.

SECTION 6.27 DBH
DEMOLITION, REMOVAL AND DISPOSAL OF BENCHES

6.27 DBH.1. DESCRIPTION. Under this Section, the Contractor shall furnish all labor, material, equipment, insurance, and necessary incidentals required for the demolition, removal and disposal, away from the site, of benches in accordance with the Contract Drawing, the specifications and the directions of the Engineer.

6.27 DBH.2. METHODS. All work shall be done in accordance with the applicable requirement of the Section 6.27 - Demolition of Structures, of the Standard Highway Specifications, and as amended below.

BENCHES. Benches marked for removal under Item No. 6.27 DBH, shall be first separated their anchor bolts. The benches shall then be removed and disposed of away from the site and then the bench foundations shall be excavated and disposed of as directed by the Engineer. All excavations shall be backfilled to the satisfaction of the Engineer, at no additional cost to the City.

6.27 DBH.3. MEASUREMENT.

The quantities to be measured for payment under Demolition, Removal and Disposal of BENCHES shall be the actual number of each removed from the site, to the satisfaction of the Engineer.

6.27 DBH.4. PRICES TO COVER.

The unit prices bid for

ITEM NO. 6.27 DBH DEMOLITION, REMOVAL AND DISPOSAL OF BENCHES

shall be a unit price for each and shall cover the cost of furnishing all labor, materials, plant, equipment, insurance and necessary incidentals required to complete the work; all in accordance with the contract drawings, the specifications and the directions of the Engineer.

Payment will be made under:

Item No.	Item	Pay Unit
6.27 DBH	DEMOLITION, REMOVAL AND DISPOSAL OF BENCHES	EACH

SECTION 6.29 TTM
TEMPORARY TUBULAR MARKERS

6.29TTM.1. INTENT. This section describes the work of furnishing, installing, maintaining, and removing Temporary Tubular Markers.

6.29TTM.2. DESCRIPTION. Under this section, the Contractor shall furnish, install, maintain, relocate, and remove, when directed, Temporary Tubular Markers as indicated on the contract drawings and as directed by the Engineer. Tubular markers shall be defined by the National Cooperative Highway Research Program (NCHRP) Report 350 as a Category I device.

6.29TTM.3. MATERIALS. Tubular Markers shall conform to the specifications set forth in the National Manual on Uniform Traffic Control Devices for Streets and Highways (National MUTCD) plus the New York State Supplemental (NYS Supplement) and shall be NCHRP 350 approved. Tubular markers shall be orange, with a minimum height of 36" (900-mm) and a minimum outside diameter of 2" (50-mm). Tubular Markers shall be circular or elliptical in cross section and shall have a maximum weight of 13-lb (6-kg), not including a mounting base.

Tubular Markers shall have two horizontal circumferential stripes of white reflective sheeting a minimum of 3" (75-mm) wide. The top edge of the upper band shall be a maximum of 2" (50-mm) from the top of the marker. The space stripes between shall not exceed 6" (150-mm).

Reflective sheeting shall conform to NYSDOT Standard Highway Specification Section 730-05 *Reflective Sheeting* ASTM D4956 Type I or Type III. The sheeting shall be bonded to the post with a precoated, pressure-sensitive adhesive or a tack-free, heat activated adhesive. Mechanical fasteners to bond reflective sheeting to the post will not be allowed.

For free-standing tubular Temporary Tubular Markers, the base and/or any nonflexible portion of the marker shall not be more than 2" (50-mm) in height.

For tubular Temporary Tubular Markers fastened to pavement, the bonding system used shall be a fast-setting chemical compound, mastic-type material, or mechanical fastener capable of fixing the tubular marker to either concrete or asphalt pavement. The bonding system shall not present a hazard to traffic if the tubular marker or base unit becomes unfixed from the pavement.

Acceptance of materials will be based on the manufacturer's name and type of tubular marker appearing on the most current New York State Department of Transportation's Approved List titled "Tubular Markers."

6.29TTM.4. METHODS. The Contractor shall install Temporary Tubular Markers in accordance with the contract documents or as directed by the Engineer. The Contractor shall attach the tubular markers to the pavement in a manner that prevents them from being moved or dislodged by traffic. Tubular markers shall be installed on pavement that has been cleaned to remove pavement markings, oil, dirt, or other debris or substances that may interfere with a proper bond. Attachment to the pavement shall be by mechanical fastener or by adhesive, in accordance with the manufacturer's recommendations. Bonding agents shall be of sufficient amount or size to ensure proper bonding of the base to the pavement.

All temporary tubular markers shall be maintained upright, at proper spacing, in proper alignment and orientation, kept clean, and replaced as required during the various stages of construction.

Temporary tubular markers removed or damaged by the Contractor's operations or by traffic shall be replaced immediately, so that positive separation is maintained between opposing lanes of traffic at all times. Damaged reflective sheeting on interim tubular markers shall be replaced before nightfall as necessary to maintain adequate visibility of the markers. In cases where only isolated individual markers are lost or damaged, and adequate visibility is maintained by the remaining markers, replacement will not be required until more than one (1) consecutive markers have been damaged or lost.

At the completion of the work or when directed by the Engineer, the temporary tubular markers shall be removed and disposed of away from the work site.

6.29TTM.5. MEASUREMENT. The quantity to be measured for payment shall be the actual number of Temporary Tubular Markers placed in the work, to the satisfaction of the Engineer.

Payment will be made only for the initial installation at any location. Whenever Temporary Tubular Markers are moved to a new location, as required by the contract drawings or directed by the Engineer, payment will be made in the same manner as if it were an initial installation. However, only tubular markers that are in satisfactory conditions may be relocated to a new location. Minor movement of the Temporary Tubular Markers from one side of the roadway to the other side, or rearrangement within a work area will not be considered as a movement to a new location and will not entitle the Contractor to additional payment.

No payment will be made for movements of Temporary Tubular Markers made for the Contractor's convenience; for movement of Temporary Tubular Markers at a given location at the end of a work period and subsequent replacement at the same location at the beginning of the next work period; for movement of Temporary Tubular Markers at a given location during a work period and subsequent replacement at the same location during the same work period; or for the interchanging of Temporary Tubular Markers between initial installations.

6.29TTM.6. PRICE TO COVER. The contract price bid per each for Item No. 6.29 TTM - TEMPORARY TUBULAR MARKERS, shall cover the cost of furnishing all labor, materials, equipment, insurance, and necessary incidentals required to complete the work of furnishing, installing, maintaining, relocating, and removing tubular markers, all in accordance with the contract drawings, the specifications and the directions of the Engineer. No additional payment will be made for replacing damaged markers.

Payment will be made under:

Item No.	Item Description	Pay Unit
6.29 TTM	TEMPORARY TUBULAR MARKERS	EACH

SECTION 6.59 PF
TEMPORARY CONCRETE BARRIER WITH FENCE

6.59PF.1. INTENT. This section describes the work to be done in connection with temporary concrete barriers with chain link fence.

6.59PF.2. DESCRIPTION. The Contractor shall furnish, install, move maintain and remove temporary concrete barriers with chain link fence in accordance with the plans, the specifications and the directions of the Engineer.

6.59PF.3. MATERIALS. The temporary concrete barrier shall conform to the requirements of New York State Department of Transportation Standard Sheet No. 619-3R1, modified to accommodate a chain link fence with posts. Top and bottom rails will not be required for the fence.

Chain link fencing and incidentals shall be in accordance with Section 607 and Materials Section 710, of the current Standard Specifications, Construction and Materials, New York State Department of Transportation, Office of Engineer. The Engineer will inspect all chain link fence material for conformance with specifications.

The Contractor shall be required to provide a solid, secure chain link fence system consisting of posts, post embedment, fence fabric, and all other incidentals as may be required. Fence posts shall be embedded in the concrete barrier and the chain link fence shall extend from the barrier to a height of at least six (6) feet above grade.

Maximum spacing of fence posts shall be eight (8) feet from center to center. Minimum embedment of fence posts into the barrier shall be four (4) inches deep.

Fence fabrication shall be continuous for the length of the concrete barrier; however, at joints between concrete barriers, the gap between fence sections shall not be more than four (4) inches.

The barrier sections shall be precast portable concrete units. The Manufacturer shall certify that the temporary concrete barrier units conform to the details shown on the aforementioned NYSDOT's Standard Sheet, or approved drawing.

The Engineer will inspect the temporary concrete barrier sections, complete with fence, upon delivery to the project site for conformance to specifications. Any barrier sections having damage and/or defects in the concrete, fence and/or joint connections will be rejected by the Engineer when in the Engineer's judgment the performance of the barriers will be affected.

The temporary concrete barrier sections with fence shall form a smooth and continuous barrier when joined together. Any sections damaged or misaligned while in service shall be corrected or replaced to the satisfaction of the Engineer.

Striped reflectorization of the barriers is required. Striping pattern is to be alternating twelve (12) inch wide stripes of white and orange sloped downwards in the direction of traffic at 45-degrees.

Reflective sheeting material shall be used and it shall conform to photometric and color (Orange and White) requirements of Subsection 730-05.02, Reflective Sheeting (Class B), of

the current Standard Specifications, Construction and Materials, New York State Department of Transportation, Office of Engineer.

6.59PF.4. METHODS. The Contractor shall furnish, erect, move, and remove temporary concrete barriers with chain link fence where and as indicated on the plans or as directed by the Engineer.

Where indicated on the plans or in the proposal, temporary concrete barriers shall be supplemented by approved steady burning lights.

Each run, or bay, of temporary concrete barrier unit with chain link fence shall be fastened together to form a continuous chain. After placement, each successive unit shall be moved longitudinally to remove the slack in the joint between units. The units at each end of a run or bay shall be anchored as shown on the Standard Sheet. Where shown on the plans or directed by the Engineer, the ends of the barrier run shall be fitted with a tapered end section, flared back.

6.59PF.5. MEASUREMENT. The quantity to be measured for payment shall be the number of linear feet of temporary concrete barrier with chain link fence actually placed including transition sections, measured along the centerline of the top surface of each barrier.

6.59PF.6. PRICE TO COVER. The contract price bid per linear foot for Item No. 6.59 PF - TEMPORARY CONCRETE BARRIER WITH FENCE, shall cover the cost of all labor, materials, and equipment necessary to erect, maintain, and remove the required temporary concrete barrier with chain link fence, including any required connection devices, orange and white reflective stripes on the faces of the barriers, all in accordance with the plans, the specifications and the directions of the Engineer.

Any movement of temporary concrete barrier with chain link fence except movements of the concrete barrier necessary to maintain, realign, or replace damaged units will be considered as a movement to a new location and the Contractor will be entitled to payment for the movement.

Payment will be made under:

Item No.	Item Description	Pay Unit
6.59 PF	TEMPORARY CONCRETE BARRIER WITH FENCE	L.F.

SECTION 6.97 A
EXTRA-HIGH-EARLY STRENGTH CONCRETE BASE

6.97A.1. DESCRIPTION. This section describes the construction of an extra-high-early strength concrete base for pavement.

In intersections where the street must be fully opened to traffic by the end of each work period, in accordance with the contract drawings, the specifications, the traffic stipulations, and the directions of the Engineer, the concrete base shall be laid with an extra-high-early strength concrete base.

The Contractor will be subject, under **Section 6.70** of the Standard Highway Specifications, to liquidated damages in the amount shown on Schedule "A" for each and every hour, or any part thereof, that the entire width of pavement designated to be reconstructed with extra-high-early strength concrete base is not available to traffic one (1) hour after the end of each work period.

6.97A.2. MATERIALS AND METHODS. All materials and methods for the concrete base shall comply with the requirements specified for Item 4.04 H, except for the following modifications and additions:

(A) Concrete shall be extra-high-early strength capable of obtaining a minimum compressive strength of 2,800-psi in six (6) hours, a minimum compressive strength of at least 3,200-psi at 3-days, and a sufficient size work crew and working time before its initial set to allow for proper placement of the concrete. Modification of concrete shall be with either an increased cement factor (10-bag mix of Portland cement), a reduced water content, superplasticizer, and accelerator or an approved Type IP hydraulic cement complying with the requirements of ASTM C595 modified with additives meeting the requirements of ASTM C688.

(B) A suggested mix design and test results are attached at the end of this section. Should the Contractor propose to use this mix design the Contractor shall be required to verify that the Contractor's mix agrees with the first 28-days of the attached test results. Otherwise, if the Contractor chooses to use another mix design, the Contractor shall be required to document the Contractor's proposed mix design for 28-days in the same manner as shown on suggested mix design and test results which are part of the eleven (11) pages of attachments (Suggested Mix Design For Extra-High-Early Strength Concrete Base) to the end of this **Section 6.97 A**.

(C) The laboratory used to verify that the Contractor's mix agrees with the mix design proved herein, or document another proposed mix design, shall be subject to approval by DDC's Quality Assurance and Construction Safety (QACS) Bureau and shall be in accordance with their "MIX DESIGN, LABORATORY AND PLANT APPROVAL PROTOCOL". Copies of this protocol may be obtained at the preconstruction meeting or from the Engineer. The minimum requirement for approval is that the laboratory must have the current AMRL/AASHTO R-18 accreditation in the category of service proposed, it must be currently licensed by the NYC Department of Buildings (DOB), and it must have documented experience estimating concrete strength by the use of Maturity Meters. In addition, all testing requirement to verify that the Contractor's mix agrees with the mix design proved herein, or document another proposed mix design, shall be witnessed by a representative of DDC's QACS Bureau.

(D) Prior to all work under this contract, the Contractor shall file with the Engineer Age-Strength data sheets of the job mix formulas for each type of concrete the Contractor proposes to use, for various ambient temperatures anticipated during the work period. These data sheets shall be used in determining the curing periods of the concrete used. Data sheets are to be presented in both tabular and graphical forms for various ambient temperatures with a maximum setting period of six (6) hours.

(E) All materials and equipment to be used by the Contractor shall be as approved by the Engineer.

(F) The earth subgrade, immediately before the concrete base is laid, shall be thoroughly compacted by an approved method, to the satisfaction of the Engineer. It shall be smooth, finished to the bottom elevation of the adjacent concrete base pavement, and be dampened with water sufficient only to be absorbed by the subgrade. The subgrade shall not be in a muddy or frozen condition and unsuitable material shall be removed and replaced with acceptable material, thoroughly compacted.

(G) All constituents of concrete shall be delivered to the project site each work period as required. The Contractor shall supply concrete at a rate consistent with placement operations as determined by the Engineer. Concrete must be batched in sufficient quantity to prevent cold joints from being formed during placement. The Engineer may discontinue the use of any type of concrete mixing or transporting units when unsatisfactory results are obtained.

(H) All concrete shall be discharged from the discharge openings directly into the forms or into approved conveyance equipment while fresh and before there is evidence of initial set. Concrete shall be deposited before the initial set has taken place, in as nearly a continuous operation as practical, and with approved tools which will prevent segregation. Concrete shall not be deposited in standing water and shall be thoroughly compacted by use of external vibration (poker nose of screed). No retampering of the concrete will be permitted. Retampering is defined as the addition of water after the mix has attained its desired initial slump.

(I) Concrete cylinders shall be taken at each location of work, as directed by the Engineer, to be tested the same day by the City.

(J) No traffic is to be permitted on newly placed concrete base until it has obtained the minimum 2,800-psi compressive strength specified.

6.97A.3. MEASUREMENT. The quantity to be measured for payment under this item shall be the volume, in cubic yards, of extra-high-early strength concrete laid where directed by the Engineer, measured in place, and adjusted for strength deficiencies in accordance with **Section 5.04** of the Standard Highway Specifications.

In determining the volume of concrete to be paid for, the spaces occupied by bases of columns, manhole heads, gate boxes, road boxes, and similar structures will be deducted when their superficial areas measure more than one (1) square foot and will not be deducted when they measure one (1) square foot or less.

6.97A.4. PRICE TO COVER. The contract price per cubic yard of extra-high-early strength concrete shall cover the cost of all labor, materials, equipment, insurance, and incidentals necessary to furnish, lay and cure the concrete, complete in place, in full compliance with the requirements of the specifications, to furnish such samples and cores for testing and to provide such testing equipment, laboratory space and facilities as may be required, to maintain the concrete base in good condition as specified in **Section 5.05** of the Standard Highway Specifications, and completing the work in accordance with the contract drawings, the specifications and the directions of the Engineer.

Payment will be made under:

Item No.	Item Description	Pay Unit
6.97 A	EXTRA-HIGH-EARLY STRENGTH CONCRETE	C.Y.

SECTION 7.50 CB2

CITYBENCH (VERSION 2)

7.50 CB2.1. INTENT.

This section describes the furnishing and installation of a CityBench (version 2.0). This specification includes the backed and backless bench types.

7.50 CB2.2. DESCRIPTION.

Under these items, the Contractor shall furnish and install each bench in accordance with the Contract Drawings, the specifications and directions of the Engineer.

7.50 CB2.3. MATERIALS.

(A) Bench shall be manufactured by Landscape Forms, Inc., 431 Lawndale Avenue, Kalamazoo, Michigan 49048.

Toll Free: (800) 521-2546. Phone: (269) 381-0396. Fax: (269) 381-3455.
Website: www.landscapeforms.com

(B) Bench Distributors:

1. Landscape Forms, Inc.,

   431 Lawndale Avenue
   Kalamazoo, Michigan 49048.
   Phone (269) 381-0396

2. Arenson Furniture Rental

   1115 Broadway
   New York, 10010
   Phone (212) 633-2400

3. AFD Contract Furniture Inc.

   810 7th Avenue,
   New York NY, 10019
   Phone (212) 721-7100

4. Empire Office Inc.

   105 Madison Ave. #15
   New York, NY 10016
   Phone (212) 607-5566

5. Or other approved supplier.

(C) STYLE:

BACKED BENCH	BACKLESS BENCH
Chelsea Bench "QASF0886-005"	Chelsea Bench "QASF0886-006"
-Length: 89-1/4 inches	-Length: 89-1/4 inches
-Seat Height: 18 inches	-Seat Height: 17-3/4 inches
-Seat Depth: 19 inches	-Seat Depth: 22-5/8 inches
-Seat Width: 22 inches	-Seat Width: 22-5/8 inches
-Seat Radius: 79 inches	-Seat Radius: 79 inches
-Arm Height: 24-7/8 inches	-Arm Height: 24-7/8 inches
-Back Radius: 70 inches	
-Back Angle: 9-1/2 degrees	
-Seat Included Angle: 98-1/2 degrees	
-Height: 34 inches	

7.50 CB2.4. <u>METHODS</u>.

(A) DELIVERY, STORAGE, AND HANDLING. Deliver materials to site in manufacturer's original, unopened containers and packaging, with labels clearly identifying product name and manufacturer. All material shall be bundled and fully supported during shipping and storage to prevent creep.

Material manufacturer's directions for storage and use shall be adhered to. Material surfaces shall be protected during shipment so as to arrive mar and scratch free in the field.

Keep materials in manufacturer's original, unopened containers and packaging until installation. Any damage or excessively scratched will be rejected and replaced with new at no additional cost to the City. All material must be straight and true when placed in the construction. Store any and all tooling, fixtures, process drawings and project files until last project phase is complete. Deliver all tooling, fixtures and documentation to the Engineer upon completion of the work.

(B) INSTALLATION. Benches shall be uniquely fabricated and pre-assembled before being installed in their final location in the work. Benches shall be installed in their final position and properly secured in place, as indicated on the Contract Drawings. Protect installed product to ensure that, except for normal weathering, benches will be without damage or deterioration at time of Substantial Completion.

<u>Note</u>: Do not drag bench across concrete or other rough surfaces. This could damage the powder coat on the bottom of the base plate.

(C) TOUCHUP AND REPAIR. For all bolted connections and minor damage caused by transportation and installation of metal powder coated surface, the touch-up finish shall be in conformance with powder coating manufacturer's recommendations. Provide touch-up such that the repair is not visible from a distance of six feet (6') under bright sunlight. The touch up color shall match the color of the powder coat.

(D) FOUNDATION. If directed by the Engineer due to the condition of the sidewalk or where drilling will crack distinctive pavements, two unreinforced concrete footings, 12" x 12" in plan and 18" deep shall be provided. Concrete shall be Class B-32 per Section 3.05. Foundation shall be centered under the bench leg base. Where footings are required, the openings for the footings are to be sawcut and the joints are to be finished per **Section 4.13.4.(F), EXPANSION JOINTS.**

(E) ANCHORING. Benches shall be anchored using sleeve anchors. Sleeve anchors shall be zinc-plated, ½" diameter, 2-1/2" length. An additional ¾" zinc-plated flat washer shall be used under the ½"zinc-plated washer that comes with the sleeve anchor.
Anchoring Details are as follows:

1. Holes shall be drilled using a full-size template, not by drilling through the bench. Place template in desired position, and drill anchor holes in the desired locations. Hole depth shall be at least 2-1/2" to allow for full engagement of sleeve anchors.
2. Remove template and clean the holes per the anchor manufacturer's requirements.
3. Place bench in desired position and install anchors. Tighten as recommended by anchor manufacturer. After anchors are properly tightened, mar the threads with a center punch in two places on each anchor to prevent removal of the nuts.

7.50 CB2.5. <u>SUBMITTALS</u>.

All submittals shall be as per **Section 1.06.31** of the NYC Department of Transportation's Standard Highway Specifications, and in accordance with the following requirements:

(A) WARRANTY: The manufacturer guarantees a standard warranty that the products will be free from defects in material and/or workmanship for a period of three years from the date of invoice.

7.50 CB2.6. <u>MEASUREMENT</u>.

The quantity of CityBench (version 2.0) to be paid for under this item shall be the number of CityBench(es) of each type installed at the site to the satisfaction of the Engineer.

7.50 CB2.7. <u>PRICE TO COVER</u>.

The unit price bid for EACH type CityBench (version 2.0) shall include the cost of furnishing all labor, materials, equipment, insurance, and incidentals necessary to furnish, assemble and install benches including, but not limited to, bench arm rests and hardware; all in accordance with the Contract Drawings, the specifications and the directions of the Engineer.

The unit price bid for this item shall also include the cost of concrete footings, sawcutting, sleeve anchors with nuts and washers, touch-up and repair.

Payment will be made under:

Item No.	Item	Pay Unit
7.50 CB2	CITYBENCH WITH BACK (V 2)	EACH
7.50 CBB2	CITYBENCH BACKLESS (V 2)	EACH

SECTION PK-444GP
GRANITE PLINTH WITH PLAQUE

1. INTENT: This section describes the furnishing and installation of Granite Plinth with Plaque.

2. DESCRIPTION: Under this Item, the Contractor shall furnish and install Granite Plinth with Plaque on concrete cradle in accordance with the plans, specifications and directions of the Engineer.

3. MATERIALS: The Granite Plinth shall be cut to the dimensions shown in the plans, and shall be grey in color with a split face finish. The color of the granite and material type shall be approved by the engineer prior to installation.

The new plaque shall be made of bronze, fabricated with dimensions and text as shown on the plans. The existing bronze plaque shall be preserved from the site, cleaned, and mounted on the plinth as shown on the plans. Both the existing plaque and new plaque shall be mounted with studs and adhesive.

The concrete cradle shall be as shown on the plans and shall comply with the requirements of Section 4.13 in the Standard Highway Specifications.

4. INSTALLATION: Contractor shall install the Granite Plinth with Plaque on concrete cradle as shown on the plans. Location of plinth shall be in accordance with plans and confirmed by the Engineer.

5. MEASUREMENT AND PAYMENT: The quantity to be measured for payment shall be the number of Granite Plinths on concrete cradles that are installed at the site to the satisfaction of the Engineer.

The Contract price bid shall be the Unit Price per EACH Granite Plinth with Plaque on concrete cradle that is furnished and installed completely, and shall include the cost of all labor, materials, equipment, insurance, and incidentals necessary to complete the work including, but not limited to, mounting the plaques to the plinth, and installation of the concrete cradle, all in accordance with the plans, the specifications, and the directions of the Engineer.

Payment will be made under:

Item No.	Item	Pay Unit
PK-444GP	GRANITE PLINTH WITH PLAQUE	EACH

SEWER AND WATER MAIN REVISIONS TO SPECIFICATIONS

NOTICE

The Standard Sewer And Water Main Specifications of the Department of Environmental Protection (dated July 1, 2014), Sewer Design Standards of the Department of Environmental Protection (dated (September 2007) Revised January 5, 2009), Water Main Standard Drawings of the Department of Environmental Protection (latest revisions), and Specifications For Trunk Main Work of the Department of Environmental Protection (dated July 2014) shall be included as part of the contract documents. These said specifications and standard drawings are hereby revised under the following section headings:

A. NOTICE TO BIDDERS
B. REVISIONS TO THE STANDARD SEWER AND WATER MAIN SPECIFICATIONS
C. REVISIONS TO THE SPECIFICATIONS FOR TRUNK MAIN WORK

(NO TEXT ON THIS PAGE)

A. NOTICE TO BIDDERS

(1) The Contractor is notified that a Notice To Proceed (NTP) date will be issued for work to commence within twenty-one (21) to thirty (30) days of Contract Registration.

(2) The Contractor shall furnish, install, maintain and subsequently remove temporary Protective Tree Barriers. Protective Tree Barriers shall be Type B, unless otherwise directed by the Engineer, and shall be constructed and installed as shown on the Protective Tree Barrier sketch in Department Of Transportation, Standard Highway Details Of Construction, Drawing No. H-1046A, as directed by the Engineer, and in accordance with Department of Parks and Recreation requirements.

(3) All utility locations and invert elevations are not guaranteed, nor is there any guarantee that all existing utilities, whether functional or abandoned within the project area are shown.

(4) All existing house connections shall be maintained and supported during construction. The Contractor shall replace any existing house connection damaged as a result of the Contractor's construction operations as ordered by the Engineer at no cost to the City.

(5) The Contractor is advised that any City owned light poles, traffic signals, street name signs, traffic signs and encumbrances including, but not limited to, underground conduit displaced as the result of the installation of the new sewers, water mains, catch basins, catch basin connections and appurtenances shall be replaced in kind and as directed by the Engineer. The cost of such work shall be deemed included in the prices bid for all items of work under this contract.

(6) The Contractor is notified that Victaulic Style 77 Coupling is no longer acceptable for use in any steel water main work. All reference to Victaulic Style 77 Coupling within the Standard Sewer And Water Main Specifications of the Department of Environmental Protection (dated July 1, 2014), the Water Main Standard Drawings of the Department of Environmental Protection (latest revisions), the Specifications For Trunk Main Work (dated July 2014), and the contract drawings, shall be replaced with Bolted Split-Sleeve Restrained Coupling.

(7) The Contractor is notified that wherever the Item No. "6.52" and words "flagger", "flagperson" and "flagman" are used in the contract documents and drawings it shall mean the Item No. "6.52 CG" and the words "Crossing Guard", respectively. The Contractor is advised that until the Comptroller of the City of New York sets a prevailing wage rate for crossing guards, there are no prevailing wage rates for crossing guards.

(8) The Contractor is notified that the fuel cost per gallon used in the formula under **Sub-Article 26.2.8** of the Standard Construction Contract for **Extra Work** will be derived from the fuel price index for the United States East Coast published weekly by the United States Energy Information Administration ("USEIA"), and available on its website at http://www.eia.gov/petroleum/gasdiesel/ . The USEIA published cost per gallon for the applicable fuel on the East Coast for the week in which the first day of each calendar quarter during the contract term occurs (i.e., January 1st, April 1st, July 1st and September 1st) will be used in the reimbursement formula for all **Extra Work** invoiced that was performed during that calendar quarter. Should the USEIA stop publishing this fuel price index, the fuel cost per gallon will be determined by reference to a substitute index to be agreed upon by the Contractor and the City.

(9) The Contractor is responsible for any damage to the existing street and traffic signal equipment, including underground conduits and the safety of both pedestrian and vehicular traffic for the duration of the contract.

Should any conduits, cables or foundations need repair due to the Contractor's negligent operations during construction, all work shall be performed according to NYCDOT Bureau of Traffic's Standard Drawings and Specifications at the sole expense of the Contractor.

It is the Contractor's responsibility to secure an approved electrical contractor to perform all traffic signal work (if any). For list of approved electrical contractors, contact Mr. Michael R. LeFosse of New York City Department of Transportation at (212) 839-3799.

(10)The Contractor is advised that where the existing roadway pavement is designated to be replaced from curb to curb, then no full depth saw cutting of pavement for sewer and water main trenches will be required, except at the limits of full width pavement restoration. No separate or additional payment will be made for any saw cutting.

(11)The Contractor shall exercise extreme caution and take all necessary precautions in placing sheeting and excavating to prevent any damage to the existing NYC TRANSIT'S subway structures and its appurtenances during construction work throughout the project area. The Contractor shall take full responsibility to protect the said NYC TRANSIT'S subway structures and its appurtenances and any damage caused by the Contractor's operations shall be made good by the Contractor to the satisfaction of the Engineer at no additional cost to the City.

(12)The Contractor shall submit shop drawings to NYC Transit Authority showing all the details and methods of construction, such as, sheeting and bracing, including the Contractor's procedure and sequence of construction, supporting and/or protection of the existing TA's structures and its appurtenances, with necessary design calculations for approval prior to starting of the construction. The design shall be made by a New York State Licensed Professional Engineer skilled in this type of construction and as further evidenced by the imprint of Professional Engineer's seal and signature on all drawings. The cost of this work shall be deemed included in the price bid for all items of work under this contract.

(13) The field office shall be within ½ mile of the job site. Field offices located further than ½ mile from the job site shall require approval by the Assistant Commissioner for Construction.

(14)The Contractor is notified that as part of this contract a "Cathodic Protection (CP) System Survey and Engineering Study of Soil and Stray Currents and Cathodic Protection System Design" has been prepared by the firm of CorrTech, Inc. The Contractor's attention is directed to the Cathodic Protection Design drawings consisting of twelve (12) and Engineering Study of Soil and Stray Currents and Cathodic Protection System Design report that consists of eighteen (18) pages that is attached to the end of this section; and to the Quantity and Cost Estimating report consisting of one (1) page that is attached to the end of this section.

(15) (A) The contractor is advised that work under this contract is within the Park Slope Historic District. (See map consisting of one(1) page attached to the end of this SW pages, for information only.) The contractor will be required to follow the rules and regulations of The New York City Landmarks Preservation Commission(NYCLPC). The Contractor is notified that the DDC has obtained a permit from the NYCLPC for the proposed work for the project, and that this permit is in the possession of the Engineer. A copy of this permit must be prominently displayed at the site of work at all times during the whole duration of this contract.

(B) The contractor is advised that work under this contract is within the Park Slope Historic District Extension II. (See map consisting of one(1) page attached to the end of this SW pages, for information only.) The contractor will be required to follow the rules and regulations of The New York City Landmarks Preservation Commission (NYCLPC). The Contractor is notified that the DDC has obtained a permit from the NYCLPC for the proposed work for the project, and that this permit is in the possession of the Engineer. A copy of this permit must be prominently displayed at the site of work at all times during the whole duration of this contract.

(16)"As-Built" Drawings For Water Mains And Appurtenances 24-Inches (600-mm.) And Larger: Upon the completion of the work for each Capital Project and as a condition precedent to obtaining the certificate for substantial completion for each Capital Project under Article 44 of the Contract, the Contractor shall furnish "As-Built" drawings for water mains and appurtenances 24-inches and larger to the City. The Contractor shall prepare and submit the "As-Built" record drawings to the Engineer for

approval. Approved "As-Built" drawings shall be delivered to the Department of Design and Construction, 30-30 Thomson Avenue, Long Island City, New York, 11101-3045. The following guideline is provided for the preparation of "As-Built" record drawings:

(A) The Contractor shall prepare the "As-Built" drawings on AutoCAD and shall provide to the City two (2) sets of Mylar and AutoCAD files on a CD. The drawings on CD's and the plotted Mylar's shall conform to the standard size of 22" x 36" (559-mm. x 914-mm.) using a 1"=30' (1:360) horizontal and 1"=10' (1:120) vertical scale. The Mylar shall be 3-mil in thickness.

(B) The "As-Built" drawings shall include but not be limited to the following guidelines summarized below:

(1) Drawings shall consist of the same legend and layout of title boxes shown on the contract drawings.
(2) Each plotted Mylar drawing shall contain the signature and stamp of the Contractor's NYS Professional Engineer/Registered Architect.
(3) The drawings shall include:
(a) street name and crossing street(s) or distance from;
(b) north arrow;
(c) property lines and widths;
(d) legal and existing street widths, street alignment and grades;
(e) "new" curb lines and widths;
(f) water main center line measured off the "new" curb line;
(g) horizontal stationing for all valves, hydrants, outlets, blow-offs, house service connections, etc., measured on a horizontal line as established by the Borough Office Bureau of Topographic;
(h) alignment and appurtenance location stationing, and deflection angles;
(i) cover and elevations (Datum used shall be that of the Borough where work is located);
(j) location of pipe joints;
(k) profile of all piping;
(l) complete details of all outlet piping roundabouts;
(m) complete details of all blow-off connections to the sewer;
(n) complete details of all air cocks;
(o) location of taps and access manholes;
(p) location of all cathodic protection stations;
(q) Venturi sensing lines plans and profiles;
(r) all appropriate notes.

(C) The cost of preparing and submitting "As-Built" approved drawings shall be deemed included in the prices bid for all scheduled bid items in the contract. No separate or additional payment will be made for this work.

(17)The Contractor is notified that at some locations, existing sewers, manholes, water mains, etc. which are to remain undisturbed are in close proximity to the line of the proposed work. The Contractor shall exercise extreme care, minimize the trench width of the proposed water main and take all necessary precautions in placing sheeting and during excavation of the trenches to prevent damage to the existing city-owned structures that are to remain undisturbed. Any damage to existing city-owned structures caused by the Contractor's construction operations shall be repaired or replaced as directed by the Engineer. The cost of such repair or replacement shall be borne solely at the Contractor's own expense.

(18)The Contractor is hereby advised that under-sidewalk vaults may be present in both sidewalk and roadway areas within the project limits. Where Contractor claims any locations cannot be completed because of vaults, the Contractor should indicate by which method the Contractor has determined vault interference and provide that information to the Engineer.

Prior to any sidewalk excavation, the Contractor shall be responsible to verify the existence of under-sidewalk vaults. The Contractor shall perform visual sidewalk reconnaissance; search for and examine record drawings; gain access to cellars and obtain measurements within vaults; and perform sub-surface radar examination or use other non-destructive methods to locate possible vault

structures. Where these above methods of verification are not available to the Contractor, the Contractor shall then be required to locate the vault envelopes and their roof depth below finished sidewalk grade by drilling holes (at no direct payment), or by Test Pits, under Item No. 73.31AEO, as directed by the Engineer.

The Contractor shall be liable for any damage to the under-sidewalk building vaults and/or its contents and/or occupants due to the Contractor's failure to verify the pre-existing vault condition.

Vault records may be available from the following (or other) sources:

(A) DEPARTMENT OF TRANSPORTATION, BUREAU OF HIGHWAY OPERATIONS, PERMIT SECTION, 55 WATER STREET, CONCOURSE LEVEL, NEW YORK, NEW YORK 10041
(B) NEW YORK CITY DEPARTMENT OF BUILDINGS
(C) NEW YORK CITY BUREAU OF FRANCHISES

Where vault roofs are determined to interfere with construction of standard pedestrian ramps, the Engineer's may approve for construction of, or installation of, non-standard pedestrian ramps, which may include relocation of ramps and/or partial roadway ramps.

An overall field sketch of each corner suspected of having a vault, along with at least one photograph (3" x 3" minimum) of each location, and the results of the Contractor's investigation shall be furnished by the Contractor to the Engineer for review at least ten (10) working days prior to start of work at that respective corner. Said photographs shall be in addition to those required under the contract. Each field sketch shall show measurements of affected areas of vaults, the building line as a reference guide which can be employed to indicate the vault envelope in the sidewalk, the boundaries of the underground structures, curb reveals, and location of proposed pedestrian ramps. No additional payment is to be made for this overall sketch.

Any vault structures punctured by the Contractor's operations shall be repaired by the Contractor to match the existing structure. Said hole in vault structures shall be temporarily repaired with an approved epoxy mortar, or securely steel plated if permanent repairs are not completed prior to the end of that same working day. No holes in vault roofs shall be left unattended at any time.

The Contractor shall also be responsible to replace damaged water proofing directly over vault roofs at the Contractor's own expense.

B. REVISIONS TO THE STANDARD SEWER AND WATER MAIN SPECIFICATIONS

(1) **Refer** to **Subsection 10.15 - Notice To Utility Companies, Etc., To Remove Structures Occupying Place Of Sewers, Water Mains Or Appurtenances**, Page I-11:
Add the following to **Subsection 10.15**:

(1) CONSOLIDATED EDISON COMPANY OF NEW YORK (CON EDISON)

There are CON EDISON facilities in the area of construction. The Contractor shall notify CON EDISON at least seventy-two (72) hours prior to the start of construction by contacting Ms. Theresa Kong at (212) 460-4834.

(2) VERIZON

There are VERIZON facilities in the area of construction. The Contractor shall notify VERIZON at least seventy-two (72) hours prior to the start of construction by contacting Mr. Aubrey Makhanlall at (718) 977-8165.

(3) TIME WARNER CABLE OF NEW YORK CITY

There are TIME WARNER CABLE facilities in the area of construction. The Contractor shall notify TIME WARNER CABLE at least seventy-two (72) hours prior to the start of construction by contacting Mr. John Piazza at (718) 888-4261.

(2) **Refer** to **Subsection 10.21 - Contractor To Notify City Departments**, Page I-13:
Add the following to **Subsection 10.21**:

(1) N.Y.C. D.E.P., BUREAU OF WATER AND SEWERS OPERATIONS

The Contractor shall notify Mr. Peter Gordon, P.E., Chief, Linear Capital Program Management Division at the Department of Environmental Protection, 59-17 Junction Blvd., 3rd floor low rise, Corona N.Y. 11368, at least thirty (30) days prior to the start of construction.

(2) NEW YORK CITY FIRE DEPARTMENT

The Contractor shall notify the Bureau of Fire Communications at least thirty (30) days prior to the start of construction by contacting Mr. Ed Durkin at (718) 624-4194 or (718) 624-3752.

(3) N.Y.C. DEPARTMENT OF TRANSPORTATION

The Contractor shall notify Mr.Michael Lofesse/Ghanshyyam Patel - Signal/Street Lighting Operations, 34-02 Queens Blvd., Long Island City, N.Y. 11101 at (212) 839-3799/ (212) 839-3359, at least seventy-two (72) hours prior to the start of construction.

(4) N.Y.C. DEPARTMENT OF PARKS AND RECREATION

The Contractor shall notify the Parks Department at least seventy-two (72) hours prior to the start of construction by contacting Mr. James Cruickshank at (718) 965-7739.

(5) N.Y.C. TRANSIT AUTHORITY

(a) The Contractor shall notify Outside Projects at least seven (7) days prior to the start of construction.

The Contractor shall contact:

Mr. Mohamed Adam, P.E.
Project Engineer-Outside Projects
New York City Transit
2 Broadway, 7th Floor
New York, N.Y. 10004
Attention Ms. Alina Avadanei
Telephone No. (646) 252-3641

(b) The Contractor is advised that bus routes as well as bus stops, within the scope of this project may be affected during construction operations. The Contractor shall notify the Transit Authority at least two (2) weeks prior to the start of construction, in order to make the necessary arrangements as required under the NYC TRANSIT GENERAL NOTES included in **Section 10.25, paragraph (A)**, **Section 10.25 paragraph (B)**, and **Section 10.25 paragraph (C)** of this section.

Arrangements shall be made through:

Ms. Sarah Wyss
Director Of Short Range, Bus Service Planning (SRB)
New York City Transit
2 Broadway, 17th Floor
New York, N.Y. 10004
Telephone No. (646) 252-5517
sarah.wyss@nyct.com

(c) In addition, the Contractor is advised that construction operations might affect subway lines and stations; and NYCT facilities (i.e. manholes, ducts, etc.). The Contractor shall notify the Transit Authority as required and specified in **Section 10.25 paragraph (A)**, **Section 10.25 paragraph (B)**, and **Section 10.25 paragraph (C)** of this section.

(3) **Refer** to **Subsection 10.25 - Contractor To Carry Out Agreement Between City And Railroad Company Or Property Owner(s)**, Page I-14:
Add the following to **Subsection 10.25**:

(A) NYC TRANSIT GENERAL NOTES

For NYC TRANSIT notes see the contract drawings.

(B) NYC TRANSIT INSURANCE REQUIREMENTS

N.Y.C. TRANSIT INSURANCE: The Contractor (Permittee) shall indemnify and save harmless the City of New York and the New York City Transit (Permittor) in accordance with the following "Insurance Requirements" and proof that the necessary insurance is in effect will be required before work can commence:

NYCT "OUTSIDE CONTRACT" INSURANCE REQUIREMENTS

(1) The Permittee at its sole cost and expense shall carry or cause to carried and shall maintain at all times during the period of performance under this Agreement policies of insurance as herein below set forth below:

(A) Workers' Compensation Insurance - (including Employer's Liability Insurance) with limits as specified in Schedule "A", which limit may be met by a combination of primary and excess insurance meeting the statutory limits of New York State. The policy shall be endorsed to include Longshoreman's and Harbor Workers' Compensation Act/Maritime Coverage Endorsement and/or Jones Act Endorsement when applicable.

(B) Commercial General Liability Insurance - (I.S.O. 2001 Form or equivalent) approved by Permittor in the Permittee's name with limits of liability as specified in Schedule "A" for each occurrence on a combined single limit basis for injuries to persons (including death) and damages to property. The limits may be provided in the form of a primary policy or combination of primary and umbrella/excess policy. When the minimum contract amounts can only be met when applying the umbrella/excess policy; the Umbrella/Excess Policy must follow form of the underlying policy and be extended to "drop down" to become primary in the event primary limits are reduced or aggregate limits are exhausted. Such insurance shall be primary and non-contributory to any other valid and collectable insurance and must be exhausted before implicating any Permittor/MTA policy available.

Such policy should be written on an occurrence form; and shall include:

- Contractual coverage for liability assumed by the Permittee under this agreement;
- Personal and Advertising Injury Coverage;
- Products-Completed. Operations;
- Independent Contractors Coverage;
- "XCU" coverage (Explosion, Collapse, and Underground Hazards) where necessary;
- Contractual Liability Exclusion, applicable to construction or demolition operations to be performed within 50 feet of railroad tracks, must be voided, where necessary; and,
- Additional Insured Endorsement (I.S.O. Form CG 20 26 07/04 version or equivalent) approved the Permittor naming:

  New York City Transit Authority (NYCTA), the Manhattan and Bronx Surface Transit Operating Authority (MaBSTOA), the Staten Island Rapid Transit Operating Authority (SIRTOA), MTA Capital Construction Co., the Metropolitan Transportation Authority (MTA) including its subsidiaries and affiliates, and the City of New York (as Owner).

(C) Business Automobile Liability Insurance Policy - (I.S.O. Form CA 00 01 10 01 or equivalent) approved by the Permittor is required if Permittee's vehicle enters Permittor property. The insurance must be in the name of the Permittee or its contractor entering the Permittor property with limits of liability in the amount specified in Schedule "A" for claims for bodily injuries (including death) to persons and for damage to property arising out of the ownership, maintenance or use of any owned, hired or non-owned motor vehicle.

(D) Railroad Protective Liability Insurance policy shall be required as specified in Schedule "A".

(E) Environmental/Pollution Exposures:

In the event environmental or pollution exposures exist, the Permittee shall require the environmental contractor or sub-contractor to provide the applicable insurance covering such exposure. The limits and type of insurance provided shall be satisfactory to the Permittor and will be confirmed to the parties prior to the start of the work.

(2) General Requirements Applicable To Insurance Policies:

(a) All of the insurance required by this Article shall be with Companies licensed or authorized to do business in the State of New York with an A.M. Best Company rating of not less than A-/VII or better and reasonably approved by the Permittor/MTA and shall deliver evidence of such policies.

(b) Except for Workers Compensation, all references to forms and coverages referred to above shall be the most recent used by the Insurance Services Office, Inc. (ISO") or equivalent

forms approved by the Insurance Department of the State of New York, provided, however, that excess coverages may be written on forms reasonably acceptable to Permittor containing provisions other than those contained in ISO forms but otherwise conforming in substance to the requirements of this Article.

(c) The Permittee or its Contractor performing the work shall furnish evidence of all policies before any work is started to the permittor:

For NYCT Contract Inspection
C/O Mr. John Malvasio
Director, MOW Engineering
130 Livingston Street, Room 8044F
Brooklyn, NY 11201
Telephone: (718) 694-1358

These policies must: (i) be written in accordance with the requirements of the paragraphs above, as applicable; (ii) be endorsed in form acceptable to include a provision that the policy will not be canceled, materially changed, or not renewed, unless otherwise indicated herein, at least thirty (30) days prior written notice to the Permittor c/o MTA Risk and Insurance Management (MTA RIM) Department - Standards, Enforcement & Claims Unit, 2 Broadway - 21st floor, New York, NY 10004; and (iii) state or be endorsed to provide that the coverage afforded under the contractor's policies shall apply on a primary and not on an excess or contributing basis with any policies which may be available to the Permittor/MTA, and also that the contractor's policies, primary and excess, must be exhausted before implicating any Permittor/MTA policy available. (iv) In addition, contractor's policies shall state or be endorsed to provide that, if a subcontractor's policy contains any provision that may adversely affect whether contractor's policies are primary and must be exhausted before implicating any Permittor/MTA policy available, contractor's and subcontractor's policies shall nevertheless be primary and must be exhausted before implicating any Permittor/MTA policy available. Except for Professional Liability, policies written on claims made basis are not acceptable. At least two (2) weeks prior to the expiration of the policies, contractor shall endeavor to provide evidence of renewal or replacement policies of insurance, with terms and limits no less favorable than the expiring policies. Except as otherwise indicated in the detailed coverage paragraphs below, self insured retentions and policy deductibles shall not exceed $100,000, unless such increased deductible or retention is approved by Permittor/MTA. The Permittee shall be responsible for all claim expense and loss payments within the deductible or self-insured retention. The insurance monetary limits required herein may be met through the combined use of the insured's primary and umbrella/excess policies.

(d) Certificates of Insurance may be supplied as evidence of policies of the above policies, except for Policy (D) Railroad Protective Liability Insurance Policy. However, if requested by the Permittor, the Permittee shall deliver to the Authority, within forty-five (45) days of be request, a copy of such policies, certified by the insurance carrier as being true and complete. The Railroad Protective Liability Insurance Policy must be provided in the form of the Original Policy. A detailed Insurance Binder may be provided, ACORD or Manuscript Form, pending issuance of the Original Policy. The Original Policy must be submitted to MTA RIM within thirty (30) days of the Binder Approval.

(e) If a Certificate of Insurance is submitted, it must: (1) be provided on the Permittor Certificate of Insurance Form or MTA Certificate of Insurance Form for Joint Agency Agreements; (2) be signed by an authorized representative of the insurance carrier or producer and notarized; {3) disclose any deductible, self-insured retention, sub-limit, aggregate limit or any exclusions to the policy that materially change the coverage; (4) indicate the Additional Insureds and Named Insureds as required herein, along with a <u>physical copy</u> of the Additional Insured Endorsement (I.S.O. Form CG 20 26 07/04 version or equivalent), as applicable and the endorsement(s) must include policy number(s); (5) reference the Contract by number on the face of the certificate; and (6) expressly reference the inclusion of all required endorsements.

(f) The minimum amounts of insurance required in the detail description of policies (A), (B), (C), and (D) above shall not be construed to limit the extent of the Permittee's liability under this Agreement.

(g) If, at any time during the period of this Agreement, insurance as required is not in effect, or proof thereof is not provided to the Permittor, the Permittor shall have the options to: (i) direct the Permittee to suspend work or operation with no additional cost or extension of time due on account thereof; or (ii) treat such failure as an Event of Default.

(C) NYC TRANSIT CURRENT AND FUTURE PROJECTS

The Contractor is notified of the following:

(1) The following subway lines are within the area of this project:
(a) The **IRT No. 4 Trains** are running along Flatbush Avenue

(2) The Contactor can obtain NYC Transit Structural Drawings by contacting Mr. Chenthitta Gopalakrishnan at (646) 252-3614.

(3) The project might have an impact at the following stations:
(a) Grand Army Plaza Station for the IRT No. 4 Line

Should it become necessary to close any of the entrances for the above stations, see Note No. 14.35 from the General Notes that are made part of the contract drawings.

(4) (a) The following tables showing NYC Transit's current and planned projects that may impact and/or interfere with this project might require the Contractor to coordinate construction work with NYCT contractors. These tables are for information only:

Grand Army Plaza Station/Eastern Parkway Line – IRT/Brooklyn

Contract	Project Title	Design Manager/ Telephone No.	Construction Manager/ Telephone No.	Resident Engineer/ Telephone No.
ST01-1460 A37628	Stations Sandy Sandy Resilliency	S.Ragheb/ (646) 252-3060	J.Singh/ (718) 613-0027	
ST01-0868 A37602	StationsHP:6 Stns (Jacobs PK)	D.Wesley (646) 252-3061	M.Yu/ (646) 252-3487	L.J. Baptiste (718) 613-0156
ST01-0868 A37574	Stations Syst Wide Des/Mti-386 Stn	D.Wesley (646) 252-3061	M.Yu/ (646) 252-3487	L.J. Baptiste (718) 613-0156
ST21-1966	Station Compo STN Comp:Ventiators	Undesignated	Undesignated	
C-B01-1251 D61142	Contingent Funds Sandy-Migtn Studies-EBCS	Undesignated	Undesignated	

(4) **Refer** to **Subsection 10.30 - Contractor To Provide For Traffic**, Page I-15:
Add the following to **Subsection 10.30**:

(1) Traffic Stipulations:

The Contractor shall refer to the Traffic Stipulations (six (6) pages) that are attached to the end of this section, and as directed by the Engineer.

(7) **Refer** to **Subsection 71.41.4 - Specific Pavement Restoration Provisions**, Page VII-67:
Add the following to **Subsection 71.41.4**:

(E) Specific Pavement Restoration Provisions:

In St. Johns Place from approximately fifteen (15) feet West of the East building line of 5th Avenue to the West building line of Plaza Street West; In Park Place from approximately fifteen (15) feet West of the East building line of 5th Avenue to approximately ten (10) feet East of the East building line of 6th Avenue; In 6th Avenue from approximately forty-two (42) feet South of the North Building line of Union Street to approximately fifteen (15) feet north of the South building line of Park Place; In Sterling Place from approximately ninety-five(95) feet West of the West building line of Flatbush Avenue to approximately forty-one(41) feet East of the East building line of Flatbush Avenue; In Flatbush Avenue from seventy-three (73) feet North of the North building line of Sterling Place to approximately one hundred and seventy-five (175) feet South of the north building line of 8th Avenue; In 8th Avenue from approximately thirty-two (32) feet South of the North building line of Lincoln Place to approximately fifteen (15) feet north of the South building line of Flatbush Avenue; In 5th Avenue from approximately fifteen(15) feet South of the North building line of St. Johns Place to approximately fifteen(15) feet north of the South building line of Douglass Street; In 5th Avenue from approximately fifteen(15) feet South of the North building line of Parks Place to approximately fifteen(15) feet north of the South building line of Baltic Street, the permanent pavement restoration shall be as follows:

(a) The permanent restoration over the **trench width and cutbacks only** shall consist of a top course of one and one-half (1-1/2) inches of binder mixture on a base course of a minimum of four and one-half (4-1/2) inches of binder mixture, or a top course of a minimum of three (3) inches of binder mixture on a base course of a minimum of six (6) inches of concrete, to match the existing pavement as directed by the Engineer.

(b) Finally an overlay of two (2) inches of asphaltic concrete wearing course shall be installed over the entire width of the roadway from **curb to curb** or **edge to edge** of existing roadway.

In all other street areas requiring sewer and water main work only, the restoration shall be as follows:

(a) The permanent restoration over the **trench width and cutbacks only** shall consist of a top course of one and one-half (1-1/2) inches of asphaltic concrete wearing course on a base course of a minimum of four and one-half (4-1/2) inches of binder mixture, or a top course of one and one-half (1-1/2) inches of asphaltic concrete wearing course on a minimum of one and one-half (1-1/2) inches of binder mixture on a base course of a minimum of six (6) inches of concrete, to match the existing pavement as directed by the Engineer.

(3) The following requirements apply:

(a) Before the top course is installed, an additional width of asphalt beyond the edge of new base course shall be saw-cut and removed from all edges of trenches to a depth to accommodate the specified top course and the entire area restored. This additional removal shall be in accordance with paragraph (b) below.

(b) Pavement excavation along with saw cutting of pavements for sewer and water main trenches shall be in accordance with **Section 71.21 - Pavement Excavation** of the Standard Sewer And Water Main Specifications.

(c) At locations requiring the installation of a concrete base course, a reflective cracking membrane shall be installed over joints prior to restoration, the cost of which shall be deemed included in the prices bid for all pavement restoration items. Additionally, appropriate pavement keys as described below shall be used.

(d) Pavement keys **Type B-1** shall be used to insure a desired four (4) inch curb reveal (two and one-half (2-1/2) inch absolute minimum). Pavement key **Type A** shall be used in all intersections. Both keys are to be per Department Of Transportation Specifications and Standard Details of Construction.

(e) Unless otherwise specified, the cost for Proctor analyses, in-place soil density tests, tack coating, eradication of temporary roadway markings, stripping or milling of pavement keys and adjustment of city-owned castings for all roadway work shall be deemed included in the prices bid for all pavement restoration items.

(f) Payment for placement of temporary pavement marking shall be made under Item No. 6.49 - TEMPORARY PAVEMENT MARKINGS (4" WIDE).

(g) Payment for removal of existing pavement markings shall be made under Item No. 6.53 - REMOVE EXISTING LANE MARKINGS (4"WIDE).

(h) Payment for placement of permanent pavement marking with thermoplastic reflectorized pavement markings (crosswalk and lane dividers) shall be made under Item No. 6.44 - THERMOPLASTIC REFLECTORIZED PAVEMENT MARKINGS (4" WIDE).

(i) Payment for pavement restoration shall be made under the following items:

Item No.	Item	Payment Description
4.02 AB-R	Asphaltic Concrete Wearing Course, 1-1/2" Thick	(For asphaltic concrete wearing course top course when no overlay is required.)
4.02 AF-R	Asphaltic Concrete Wearing Course, 2" Thick	(For 2" asphaltic concrete wearing course overlay from curb to curb or edge to edge.)
4.02 CA	Binder Mixture	(For binder mixture base course over trenches and cutbacks; binder mixture top filler course under asphaltic concrete wearing course when no overlay is required; binder mixture top course when overlay is required; binder mixture in Type A and B Keys; and binder mixture to fill in roadway depressions and to provide a leveling course prior to overlay where ordered.)
4.04 H	Concrete Base For Pavement, Variable Thickness For Trench Restoration, (High-Early Strength)	(For concrete base course over trenches and cutbacks.)
4.05 AX	High Early Strength Reinforced Concrete Pavement (Bus Stops)	(For reinforced concrete pavement at bus stops.)
6.97 A	Extra-High-Early Strength Concrete	(For concrete base course over trenches and cutbacks where ordered; and for entire width of roadway restoration where ordered.)

C. REVISIONS TO THE SPECIFICATIONS FOR TRUNK MAIN WORK

1) **Refer** to **Part 1 – Furnishing And Delivering Steel Pipes And Appurtenances 30 Inches In Diameter And Larger, Section 11. Fabrication:**, Page 4;
Add the following to **Section 11:**

All steel water mains shall be spiral welded pipes, and all steel water main fittings with the exception of tees and reducers shall be fabricated from qualified spiral welded pipe. Can type pipe is not acceptable except for fabrication of tees and reducers.

2) **Refer** to **Part 1 – Furnishing And Delivering Steel Pipes And Appurtenances 30 Inches In Diameter And Larger, Section 13. Special Fittings:**, Page 5;
Add the following to **Section 13:**

The steel reducer shall have a length of seven (7) feet for every twelve (12) inches reduction in diameter.

END OF SECTION

This Section consists of twelve (12) pages plus thirty-nine (39) pages of attachments:

- **Six (6) pages of OCMC Traffic Stipulations**
- **Thirty-two (32) pages of Cathodic Protection System Design**
- **One (1) page of Park Slope Historic District Map**

NEW YORK CITY

Department of Transportation

POLLY TROTTENBERG, Commissioner

OCMC TRAFFIC STIPULATIONS 11/16/2016

OCMC FILE NO: BNEC-16-578
CONTRACT NO: BED798
PROJECT: REPLACEMENT OF 72 INCH WATER MAINS AND COMBINED SEWERS IN FLATBUSH AVENUE, ETC.

LOCATION(S): VARIOUS

PERMISSION IS HEREBY GRANTED TO THE **NYCDDC** AND ITS DULY AUTHORIZED AGENT, TO ENTER UPON AND RESTRICT THE FLOW OF TRAFFIC AT THE LOCATION(S) BELOW FOR THE PURPOSE OF CARRYING OUT THE ABOVE NOTED PROJECT, SUBJECT TO THE FOLLOWING STIPULATIONS:

I. SPECIAL STIPULATIONS

A. **EMBARGOES** – A CONSTRUCTION EMBARGO WILL APPLY TO THOSE LOCATIONS BELOW WHICH FALL WITHIN THE **HOLIDAY EMBARGO** OR ANY OTHER SPECIAL EVENT EMBARGOES PUBLISHED BY THE BUREAU OF PERMIT MANAGEMENT AND CONSTRUCTION CONTROL.

B. **BIKE LANES** – IF WORK IS IN OR AFFECTING A BIKE LANE, THE PERMITTEE MUST POST ADVANCE WARNING SIGNS 350 FEET AND 200 FEET PRIOR TO THE WORK ZONE STATING **"CONSTRUCTION IN BIKE LANE AHEAD PROCEED WITH CAUTION"**, AND ALSO POST A SIGN AT THE WORK ZONE STATING **"CONSTRUCTION IN BIKE LANE PROCEED WITH CAUTION"**. SUCH SIGNS SHALL BE ORANGE, 3' X 3', DIAMOND-SHAPED WITH 4" BLACK LETTERING. SIGNS SHALL BE POSTED IN ACCORDANCE WITH THE FEDERAL MANUAL ON UNIFORM TRAFFIC CONTROL DEVICES (MUTCD).

C. **BIKE SHARE STATIONS:** THE PERMITTEE SHALL NOT REMOVE, RELOCATE, DAMAGE OR DISRUPT THE OPERATION OF EXISTING BIKE SHARE STATIONS WITHOUT FIRST CONTACTING NYC BIKE SHARE AT 855-245-3311 FOR THEIR REQUIREMENTS PRIOR TO COMMENCING WORK.

D. **CITYBENCH:** THE PERMITTEE SHALL NOT REMOVE, RELOCATE, DAMAGE OR DISRUPT AN EXISTING CITYBENCH WITHOUT FIRST CONTACTING NYC DOT AT 212-839-6569, OR VIA EMAIL AT CITYBENCH@DOT.NYC.GOV PRIOR TO COMMENCING WORK.

E. **PROTECTION OF NYC DEP GREEN INFRASTRUCTURE:** THE PERMITTEE SHALL TAKE PRECAUTION OF NYC DEP GREEN INFRASTRUCTURE IN THE RIGHT-OF-WAY. THE PERMITTEE MUST PROTECT NYC DEP GREEN INFRASTRUCTURE DOWNSTREAM OF THE WORK OR WITHIN FIVE (5) FEET OF THE WORK AREA. THE PERMITTEE MUST EMAIL NYC DEP AT SUSTAINABILITY@DEP.NYC.GOV FOR PROTECTION REQUIREMENTS PRIOR TO COMMENCING WORK. THE PERMITTEE IS RESPONSIBLE FOR RESTORATION OF DAMAGED NYC DEP INFRASTRUCTURE AS DIRECTED BY NYC DEP.

F. **BUS STOPS** – THE PERMITTEE SHALL PROVIDE WRITTEN NOTICE TO NYC DOT OCMC AND NEW YORK CITY TRANSIT (NYCT) A MINIMUM OF FIVE (5) WEEKS IN ADVANCE FOR LANE/STREET CLOSURES THAT AFFECT BUS ROUTES/BUS STOPS.

G. **STREET LIGHTS / TRAFFIC SIGNALS:** THE PERMITTEE SHALL NOT REMOVE OR RELOCATE EXISTING STREET LIGHTS OR TRAFFIC SIGNALS WITHOUT FIRST OBTAINING APPROVAL FROM NYCDOT STREET LIGHTING / TRAFFIC SIGNALS UNIT.

H. **TRAFFIC CAMERAS, DETECTION/COMMUNICATION EQUIPMENT:** IF AT ANY TIME DURING THE APPROVED WORK, THE PERMITTEE ENCOUNTERS TRAFFIC SURVEILLANCE CAMERAS, DETECTION EQUIPMENT OR ANY TYPE OF COMMUNICATION EQUIPMENT (WIRELESS OR HARD-WIRED) ON ANY NYC DOT FACILITY, THAT IS NOT INCLUDED ON THE DESIGN/BUILD DRAWINGS, THE PERMITTEE SHALL IMMEDIATELY NOTIFY NYC DOT TRAFFIC MANAGEMENT BY PHONE AT 718-433-3390 OR 718-433-3340 AND VIA EMAIL AT TMC@DOT.NYC.GOV AND AWAIT DIRECTION PRIOR TO CONTINUING WORK.

I. **METERS** – THE PERMITTEE SHALL NOT REMOVE OR RELOCATE PARKING METERS WITHOUT FIRST OBTAINING APPROVAL FROM NYCDOT PARKING METER DIVISION AT 718 – 894 – 8651.

J. **TEST PITS** – THE BELOW TRAFFIC STIPULATIONS DO NOT APPLY TO TEST PIT WORK RELATED TO THIS CONTRACT. WORK HOURS AND OTHER REQUIREMENTS FOR TEST PIT OPERATIONS MAY DIFFER FROM THE STIPULATIONS IDENTIFIED BELOW. THE PERMITTEE SHALL BE REQUIRED TO OBTAIN SEPARATE PERMITS RELATED TO TEST PITS.

K. **TEMPORARY PARKING REGULATIONS/PAVEMENT MARKINGS** – THE PERMITTEE IS REQUIRED TO INSTALL, MAINTAIN AND REMOVE ALL NECESSARY TEMPORARY PARKING AND REGULATORY SIGNS AND PAVEMENT MARKINGS, AND RESTORE THEIR ORIGINAL CONDITION PER NYC DOT STANDARDS, PRIOR TO EXPIRATION OF THEIR PERMITS. THE PERMITTEE OR AGENCY PERFORMING PUBLIC OUTREACH SHALL POST AND MAINTAIN ADVISORY SIGNS A MINIMUM OF 48 HOURS PRIOR TO CHANGING EXISTING PARKING REGULATION SIGNS TO APPROVED TEMPORARY CONSTRUCTION PARKING REGULATION SIGNS. THE ADVISORY SIGNS SHOULD BE POSTED ON ALL POLES AND DRIVE RAILS ON THE SEGMENT AFFECTED, INDICATING THE DATE OF THE CHANGE, THE NEW REGULATIONS AND A TELEPHONE NUMBER TO OBTAIN MORE INFORMATION.

L. **ACCESS TO ABUTTING PROPERTIES** – THE PERMITTEE SHALL COORDINATE ALL ACTIVITIES WITH ABUTTING PROPERTY OWNERS TO ENSURE ACCESS IS PROVIDED TO/FROM ENTRANCES/DRIVEWAYS AT ALL TIMES.

M. **AUTHORIZED PARKING** – PRIOR TO PERFORMING WORK WHICH IMPACTS AUTHORIZED PARKING, THE PERMITTEE SHALL SUBMIT IN WRITING, AND COPY OCMC-STREETS, A REQUEST TO OCCUPY SPACE CURRENTLY USED BY AUTHORIZED VEHICLES. APPROVAL MUST BE RECEIVED FROM AUTHORIZED PARKING PRIOR TO OCCUPYING THESE AREAS.

NYC Department of Transportation
Bureau of Permit Management and Construction Control
ater Street - 7th Floor, New York, NY 10041
2.839.9637 F: 212.839.8970
www.nyc.gov/dot

N. **NOTIFICATION** – THE PERMITTEE MUST AT LEAST TWO (2) WORKING DAYS BEFORE THE START OF CONSTRUCTION NOTIFY THE NYC FIRE DEPARTMENT, NYC POLICE DEPARTMENT, NYCEMS, LOCAL COMMUNITY BOARD, BOROUGH PRESIDENT'S OFFICE-CHIEF ENGINEER, NYCDOT OCMC OFFICE, AND ALL ABUTTING PROPERTY OWNERS.

O. **CONSTRUCTION INFORMATIONAL SIGNS** – THIS PROJECT REQUIRES A CONSTRUCTION PROJECT INFORMATIONAL SIGN (CPIS) IN ACCORDANCE WITH NYCDOT HIGHWAY RULE SECTION 2-02 (4) AND (5). CRITERIA AND A PROTOTYPE FOR THIS SIGN MAY BE FOUND ON THE NYCDOT WEBSITE AT:

HTTP://WWW.NYC.GOV/HTML/DOT/DOWNLOADS/PDF/DOT_CPIS_DIRECTIONS.PDF

P. **ENHANCED MITIGATIONS**

- **ENHANCED MITIGATIONS FOR PEDESTRIAN FLOW**, INCLUDING METAL FENCING, SHALL BE PROVIDED TO ENSURE PEDESTRIANS STAY WITHIN THEIR DESIGNATED PATH/ROUTE. PEDESTRIAN MANAGERS SHALL BE PROVIDED TO ASSIST WITH PEDESTRIANS AT THE DESIGNATED CROSSWALK AREAS.
- **"NO STANDING ANYTIME-TEMPORARY CONSTRUCTION" SIGNS** AND TEMPORARY PAVEMENT MARKINGS SHALL BE INSTALLED AND MAINTAINED AS WARRANTED BY THE MAINTENANCE AND PROTECTION OF TRAFFIC (MPT) REQUIRED TO FACILITATE TRAFFIC MOVEMENTS THROUGH THE WORK ZONE. ALL TEMPORARY SIGNS AND PAVEMENT MARKINGS SHALL BE REMOVED UPON COMPLETION OF THE PROJECT.
- **COMMUNITY OUTREACH** SHALL BE PROVIDED FOR THE DURATION OF THE PROJECT.

II. MAINTENANCE AND PROTECTION OF TRAFFIC

A. DOUGLASS STREET, BETWEEN 4TH AVENUE AND 5TH AVENUE

B. ST JOHNS PLACE, BETWEEN 5TH AVENUE AND FLATBUSH AVENUE

C. PARK PLACE, BETWEEN 5TH AVENUE AND 7TH AVENUE

D. STERLING PLACE, BETWEEN 5TH AVENUE AND 7TH AVENUE

E. 8 AVENUE, BETWEEN LINCOLN PLACE AND FLATBUSH AVENUE

1. Work hours shall be as follows: 7AM-6PM MONDAY-FRIDAY
2. During working hours, the contractor shall maintain one 11ft lane for local and emergency traffic only and 5ft wide sidewalk opening for the pedestrians.
3. After working hours, the contractor shall maintain one 11ft lane for traffic.

F. INTERSECTION OF DOUGLASS STREET AND 4TH AVENUE

1. Work hours shall be as follows: 10AM-4PM MONDAY-FRIDAY.
2. During working hours, the contractor shall maintain one 11ft lane for local and emergency traffic only on Douglass Street and shall maintain two 11ft lanes for traffic on the north-bound direction of 4th Avenue.
3. After working hours full width of the roadway shall be open to traffic

G. GREGORY PLACE, BETWEEN BUTLER STREET AND BALTIC STREET

H. BUTLER STREET, BETWEEN 4TH AVENUE AND GREGORY PLACE

I. BALTIC STREET, BETWEEN 4TH AVENUE AND 5TH AVENUE

J. STERLING PLACE, BETWEEN FLATBUSH AVENUE AND VANDERBILT AVENUE

1. The contractor is permitted to perform work only during the periods when the school is in recess.
2. Work hours shall be as follows: 7AM-6PM MONDAY-FRIDAY.
3. During working hours, the contractor shall maintain one 11ft lane for local and emergency traffic only and 5ft wide sidewalk opening for the pedestrians.
4. After working hours, the contractor shall maintain one 11ft lane for traffic.
5. The contractor must coordinate with PS 133 and Key Food supermarket prior to mobilizing.

K. INTERSECTION OF BALTIC STREET AND 4TH AVENUE

L. INTERSECTION OF BUTLER STREET AND 4TH AVENUE

1. The contractor is permitted to perform work only during the periods when the school is in recess.
2. Work hours shall be as follows: 10AM-4PM MONDAY-FRIDAY.
3. During working hours, the contractor shall maintain one 11ft lane for local and emergency traffic only on the one way streets and shall maintain two 11ft lanes for traffic on the north-bound direction of 4th Avenue.
4. After working hours full width of the roadway shall be open to traffic

M. INTERSECTION OF BUTLER STREET AND GREGORY PLACE

N. INTERSECTION OF BALTIC STREET AND GREGORY PLACE

1. The contractor is permitted to perform work only during the periods when the school is in recess.
2. Work hours shall be 7am-6pm MONDAY-FRIDAY
3. During working hours, the contractor shall maintain one 11ft lane for local and emergency traffic only on both streets.
4. After working hours, the contractor shall maintain a minimum of 11ft lane on both streets.
5. The contractor must coordinate with PS 133 and Key Food supermarket prior to mobilizing.

O. 5TH AVENUE, BETWEEN PARK PLACE AND DOUGLASS STREET

1. Work hours shall be as follows: 9AM-4PM MONDAY-FRIDAY.
2. During working hours, the contractor shall maintain a minimum of two 11ft lanes for traffic (one in each direction) and 5ft wide sidewalk opening for the pedestrians.
3. After working hours, the contractor shall open full width of the roadway to traffic and full width of the sidewalk to pedestrians.
4. Work shall not be permitted during the holiday embargo period.

P. INTERSECTION OF 5TH AVENUE AND BALTIC STREET

Q. INTERSECTION OF 5TH AVENUE AND PARK PLACE

R. INTERSECTION OF 5TH AVENUE AND DOUGLASS STREET

S. INTERSECTION OF 5TH AVENUE AND ST JOHNS PLACE

1. Work hours shall be as follows: 9AM-4PM MONDAY-FRIDAY.
2. During working hours, the contractor shall maintain a minimum of two 11ft lanes for traffic (one in each direction) on 5th Avenue and one 11ft lane for local and emergency traffic only on the one-way cross streets.
3. After working hours, the contractor shall open full width of the roadway to traffic .
4. Work shall not be permitted during the holiday embargo period.

T. 6TH AVENUE, BETWEEN PROSPECT PLACE AND ST JOHNS PLACE

1. Work hours shall be as follows: 7AM-6PM MONDAY-FRIDAY
2. The street shall be converted to one way street serving the southbound direction.
3. The contractor may work on two blocks simultaneously.
4. During working hours, the contractor shall maintain one 11ft lane for local and emergency traffic only and 5ft wide sidewalk opening for the pedestrians.
5. After working hours, the contractor shall maintain one 11ft lane for traffic.

U. INTERSECTION OF 6TH AVENUE AND ST JOHNS PLACE

V. INTERSECTION OF 6TH AVENUE AND STERLING PLACE

W. INTERSECTION OF 6TH AVENUE AND PARK PLACE

X. IINTERSECTION OF 8TH AVENUE AND ST JOHNS PLACE

1. Work hours shall be as follows: 7AM-6PM MONDAY-FRIDAY.
2. During working hours, the contractor shall maintain one 11ft lane for local and emergency traffic only on both streets.
3. After working hours, the contractor shall maintain a minimum of 11ft lane on both streets.

Y. 6TH AVENUE, BETWEEN ST JOHNS PLACE AND UNION STREET

1. The contractor is permitted to perform work only during the periods when the school is in recess.
2. Work hours shall be as follows: 7AM-6PM MONDAY-FRIDAY.
3. The contractor may work on two blocks simultaneously.
4. The street shall be converted to one way street serving the southbound direction.
5. During working hours, the contractor shall maintain one 11ft lane for local and emergency traffic only and 5ft wide sidewalk opening for the pedestrians.
6. After working hours, the contractor shall maintain one 11ft lane for traffic.

Z. INTERSECTION OF 6TH AVENUE AND LINCOLN PLACE

AA. INTERSECTION OF 6TH AVENUE AND BERKELEY PLACE

1. The contractor is permitted to perform work only during the periods when the school is in recess.
2. Work hours shall be as follows: 7AM-6PM MONDAY-FRIDAY.
3. During working hours, the contractor shall maintain one 11ft lane for local and emergency traffic only on both streets.
4. After working hours, the contractor shall maintain a minimum of 11ft lane on both streets.
5. The contractor must coordinate with Park Slope School prior to mobilizing.

BB. INTERSECTION OF 6TH AVENUE AND UNION STREET

1. The contractor is permitted to perform work only during the periods when the school is in recess.
2. Work hours shall be as follows: 9AM-4PM MONDAY-FRIDAY.
3. During working hours, the contractor shall maintain one 11ft lane for local and emergency traffic only on 6th Avenue and two 11ft lanes on Union Street.
4. After working hours, the contractor shall maintain a minimum of 11ft lane on both streets.
5. The contractor must coordinate with Park Slope School prior to mobilizing.

CC. FLATBUSH AVENUE, BETWEEN STERLING PLACE AND 8TH AVENUE

1. Work hours shall be as follows: 10AM-2PM MONDAY-FRIDAY for work including noisy operations (jackhammering and saw cutting) and 11PM-6AM for non-noisy operations.
2. During working hours the contractor shall maintain two 11ft lanes on the north-bound direction and one lane on the southbound direction.
3. After working hours, the contractor shall maintain four 11ft lanes for traffic (two 11ft lanes in each direction).
4. NYPD Traffic Enforcement Agents shall be present 24/7 at the intersections of Flatbush Avenue at 8th Avenue and Flatbush Avenue at Sterling Place (one per post, plus relief plus supervision).
5. The contractor must coordinate with the MTA NYCT Bus Operations Planning regarding the relocation of the bus stop.
6. Work shall not be permitted during the holiday embargo period.

DD. INTERSECTION OF 8TH AVENUE AND FLATBUSH AVENUE

EE. INTERSECTION OF STERLING PLACE AND FLATBUSH AVENUE

1. Work hours shall be as follows: 10AM-2PM MONDAY-FRIDAY for work including noisy operations (jackhammering and saw cutting) and 11PM-6AM for non-noisy operations.
2. During working hours the contractor shall maintain two 11ft lanes on the north-bound direction and one lane on the southbound direction of Flatbush Avenue and one 11ft lane for local and emergency traffic only on the cross streets.
3. After working hours, the contractor shall maintain four 11ft lanes for traffic (two 11ft lanes in each direction) on Flatbush Avenue and one 11ft lane for traffic on the cross streets.
4. Work shall not be permitted during the holiday embargo period.

FF. 7TH AVENUE, BETWEEN LINCOLN PLACE AND STERLING PLACE

1. Work hours shall be as follows: 9AM-4PM MONDAY-FRIDAY.
2. During working hours, the contractor shall maintain a minimum of one 11ft lane for two-way traffic (with flagmen assisting the traffic) and 5ft wide sidewalk opening for the pedestrians.
3. After working hours, the contractor shall open full width of the roadway to traffic and full sidewalk width to the pedestrians.

GG. INTERSECTION OF 7TH AVENUE AND ST JOHNS PLACE

1. Work hours shall be as follows: 9AM-4PM MONDAY-FRIDAY.
2. During working hours, the contractor shall maintain a minimum of one 11ft lane for two-way traffic on 7th Avenue with flagmen assisting the traffic) and one 11ft lane for local and emergency traffic only on St Johns Place.
3. After working hours, the contractor shall open full width of the roadway to traffic and full width of the

III. GENERAL NOTES

A. **THIS IS NOT A PERMIT.** THIS STIPULATION SHEET MUST BE SUBMITTED WITH ALL REQUESTS FOR PERMITS PERTAINING TO THE ABOVE CONTRACT AND PRESENT AT THE WORK SITE ALONG WITH ALL ACTIVE CONSTRUCTION PERMITS WHEN THE APPROVED WORK IS BEING PERFORMED.

B. THE PERMITTEE MUST COMPLY WITH ALL CONSTRUCTION EMBARGOS ISSUED BY THE NYCDOT INCLUDING THE HOLIDAY EMBARGO.

C. THE PERMITTEE SHALL COMPLY WITH ALL REQUIREMENTS OF THE NYCDOT SPECIAL EVENTS UNIT AS IDENTIFIED BELOW:

1. STREET FAIRS / FESTIVALS

- ALL EXCAVATIONS MUST BE PLATED WITH SKID RESISTANT PLATES.
- PLATES MUST BE RECESSED AND FLUSH WITH PAVEMENT.
- ALL PAVEMENT DEFECTS MUST BE CORRECTED WITHIN OR ADJACENT TO THE WORK ZONE.
- THE PERMITTEE IS RESPONSIBLE FOR ANY DEFECTS WITHIN THE IMMEDIATE VICINITY IF NYCDOT STREET & ARTERIAL MAINTENANCE CANNOT MAKE REPAIRS DUE TO PROJECT INTERFERENCE (AS DETERMINED BY NYCDOT).
- ALL EQUIPMENT, TRAILERS AND MATERIAL STORAGE MUST BE REMOVED.

2. RUNNING / WALKING / BIKING EVENTS

- ALL EXCAVATIONS MUST BE BACKFILLED AND PAVED OR PLATES MUST BE RECESSED AND PAVED OVER FLUSH WITH PAVEMENT.
- ALL PAVEMENT DEFECTS MUST BE CORRECTED WITHIN OR ADJACENT TO THE WORK ZONE.
- THE PERMITTEE IS RESPONSIBLE FOR ANY DEFECTS WITHIN THE IMMEDIATE VICINITY IF NYCDOT STREET & ARTERIAL MAINTENANCE CANNOT MAKE REPAIRS DUE TO PROJECT INTERFERENCE (AS DETERMINED BY NYCDOT).
- ALL EQUIPMENT, TRAILERS AND MATERIAL STORAGE MUST BE REMOVED.

3. PARADES

- ALL EXCAVATIONS MUST BE BACKFILLED AND PAVED OR PLATES MUST BE RECESSED AND PAVED OVER FLUSH WITH PAVEMENT.
- FORMATION AND DISPERSAL AREA PLATES MUST BE RECESSED AND FLUSH WITH PAVEMENT (PLATES MUST BE SKID RESISTANT).
- ALL PAVEMENT DEFECTS MUST BE CORRECTED WITHIN OR ADJACENT TO THE WORK ZONE.
- THE PERMITTEE IS RESPONSIBLE FOR ANY DEFECTS WITHIN THE IMMEDIATE VICINITY IF NYCDOT STREET & ARTERIAL MAINTENANCE CANNOT MAKE REPAIRS DUE TO PROJECT INTERFERENCE (AS DETERMINED BY NYCDOT).
- ALL EQUIPMENT, TRAILERS AND MATERIAL STORAGE MUST BE REMOVED.

4. MAYORAL EVENTS

- ALL EXCAVATIONS MUST BE BACKFILLED AND PAVED OR PLATES MUST BE RECESSED AND PAVED OVER FLUSH WITH PAVEMENT.
- ALL PAVEMENT DEFECTS MUST BE CORRECTED WITHIN OR ADJACENT TO THE WORK ZONE.
- THE PERMITTEE IS RESPONSIBLE FOR ANY DEFECTS WITHIN THE IMMEDIATE VICINITY IF NYCDOT STREET & ARTERIAL MAINTENANCE CANNOT MAKE REPAIRS DUE TO PROJECT INTERFERENCE (AS DETERMINED BY NYCDOT).
- ALL EQUIPMENT, TRAILERS AND MATERIAL STORAGE MUST BE REMOVED.

D. ALL RELOCATION WORK BY THE UTILITIES SUCH AS; CON EDISON, TELEPHONE, GAS AND CABLE COMPANIES SHALL PRECEDE THE PERMITTEE'S START OF WORK ON ALL AFFECTED ROADWAYS IN THE IMPACTED CONTRACT AREA.

E. THE PERMITTEE IS ADVISED THAT OTHER CONTRACTORS MAY BE WORKING IN THE GENERAL AREA DURING THE TERM OF THIS STIPULATION. IN WHICH EVENT, THE PERMITTEE MAY REQUIRE MODIFICATIONS BY THE OCMC-STREETS.

F. THE PERMITTEE IS NOT AUTHORIZED TO ENTER, OCCUPY OR USE ANY PUBLICLY-OWNED OR PRIVATELY OWNED, NON-PAVED, LANDSCAPE OR NON-LANDSCAPED LOCATION WITHOUT SPECIFIC WRITTEN PERMISSION. WHEN THE LOCATION IS WITHIN THE RIGHT-OF-WAY OF A LIMITED-ACCESS ARTERIAL HIGHWAY, **WRITTEN** APPROVAL FROM THE NYCDOT OCMC-HIGHWAYS IS REQUIRED. WHEN THE LOCATION IS WITHIN THE RIGHT-OF-WAY OF A PUBLIC STREET OR PUBLIC PARK, **WRITTEN** APPROVAL FROM THE NEW YORK CITY DEPARTMENT OF TRANSPORTATION OR NEW YORK CITY DEPARTMENT OF PARKS AND RECREATION IS REQUIRED. WHEN THE LOCATION IS WITHIN THE RIGHT-OF-WAY OF ANY OTHER JURISDICTION SUCH AS PRIVATE PROPERTY, STATE, FEDERAL ETC., IT IS THE PERMITTEE'S RESPONSIBILITY TO DETERMINE THE PROPERTY OWNER AND OBTAIN THE WRITTEN APPROVAL.

G. THE PERMITTEE SHALL ADHERE TO THE NYCDOT BUREAU OF BRIDGES' SPECIAL PROVISIONS FOR LANDSCAPE PROTECTION, MAINTENANCE AND RESTORATION, ITEMS 1.18.15 THROUGH 1.18.19, WHENEVER AND WHEREVER ANY OF THE PERMITTEE'S ACTIVITIES OCCUR WITHIN A LIMITED ACCESS ARTERIAL HIGHWAY RIGHT - OF - WAY.

H. NO DEVIATION OR DEPARTURE FROM THESE STIPULATIONS WILL BE PERMITTED WITHOUT THE PRIOR WRITTEN APPROVAL FROM THE OCMC-STREETS. REQUEST FOR SUCH MODIFICATIONS SHALL BE SUBMITTED TO THE OFFICE OF THE OCMC-STREETS, NEW YORK CITY DEPARTMENT OF TRANSPORTATION, A MINIMUM OF TWENTY (20) DAYS IN ADVANCE FOR CONSIDERATION.

I. FOR ANY CONSTRUCTION ACTIVITY RESULTING IN THE FULL CLOSURE OF A ROADWAY FOR MORE THAN 180 CONSECUTIVE CALENDAR DAYS, THE PERMITTEE MUST PRODUCE AND SUBMIT A COMMUNITY REASSESSMENT, IMPACT AND AMELIORATION (CRIA) STATEMENT TO NYCDOT PLANNING AND OBTAIN THEIR APPROVAL BEFORE APPLYING FOR PERMITS, IN COMPLIANCE WITH THE PROVISIONS OF **LOCAL LAW 24 STREET CLOSURE LAW.**

J. FOR THIS PROJECT THE PERMITTEE SHALL FURNISH, INSTALL AND MAINTAIN ALL NECESSARY ADVANCE WARNING AND DETOUR SIGNS, TEMPORARY CONTROL DEVICES, BARRICADES, LIGHTS AND FLASHING ARROW BOARDS IN ACCORDANCE WITH THE "MANUAL ON

UNIFORM TRAFFIC CONTROL DEVICES," THE TYPICAL SCHEMES INCLUDED IN THIS SPECIFICATION; AND AS ORDERED BY THE ENGINEER-IN-CHARGE AND THE OCMC-STREETS.

K. THE PERMITTEE SHALL BE RESPONSIBLE FOR IDENTIFYING HIS CONSTRUCTION SIGNAGE. THE IDENTIFICATION SHALL INCLUDE THE PERMITTEE'S NAME, SPONSORING AGENCY NAME AND THE CONTRACT NUMBER. THE IDENTIFICATION SHALL BE PLACED ON THE BACK OF THE SIGN. THE LETTERING SHALL BE THREE (3) INCHES HIGH.

L. THE OCMC-STREETS RESERVES THE RIGHT TO VOID OR MODIFY THESE STIPULATIONS SHOULD CONSTRUCTION FAIL TO COMMENCE WITHIN TWO (2) YEARS OF THE SIGNED DATE OF THESE STIPULATIONS.

DUANE BARRA
DIRECTOR
OCMC-STREETS

ILIR LUGJI
PROJECT MANAGER
OCMC-STREETS

NYC DDC BED 798
CP System Survey and Engineering
Study of Soils and Stray Currents
Cathodic Protection System Design

Prepared For:

NYC Department of Design and Construction
30-30 Thomson Ave
Long Island City, NY 11101

Prepared By:

CorrTech, Inc.
25 South Street
Hopkinton, MA 01748
CorrTech, Inc. Report No. 9065-4857
NYC DDC Task Order 025

August 3, 2016
Revised: November 29, 2016

STATEMENT OF LIMITATION

The conclusions presented in this document are based on the services described and not on tasks or procedures beyond the scope of the described procedures or the time and budgetary constraints imposed by the contract limitations.

CorrTech, Inc. has performed this assessment in a professional manner using that degree of skill and care exercised for similar projects under similar conditions by reputable and competent consultants, and in accordance with the procedures established within CorrTech's quality assurance, quality control protocol.

CorrTech, Inc. shall not be responsible for conditions or consequences arising from relevant facts that were concealed, withheld or not fully disclosed at the time the evaluation was performed.

CORROSION NACE SCOTT H. PAUL 4163 SPECIALIST

Report Reviewed by:
Scott Paul, P.E.
NACE Corrosion Specialist No. 4163

Report Prepared by:
Ted Midura, P.E.
NACE Cathodic Protection Technician No. 31210

Table of Contents

INTRODUCTION 1

CONCLUSION 1

RECOMMENDATIONS 2

DISCUSSION 4

APPENDIX I

- Soil Resistivity Tabulations
- Stray Current Test Results
- Cathodic Protection Design Worksheets For New Pipe Segments
- Material List - Engineers Estimate

APPENDIX II

- Cathodic Protection Design Drawings

  BED-798-CP-1 through BED-798-CP-8
  BED-798 CPD-1 through BED-798 CPD-4

INTRODUCTION

On June 28th, 2011, CorrTech, Inc. entered into agreement with the NYC Department of Design and Construction with the expectation of providing cathodic protection design, construction support, field testing, final system testing, and as-built documentation. The BED 798 project is located in Brooklyn, New York, and generally consists of the construction of 72-in steel trunk main and combined sewer replacement in Flatbush Ave between Sterling Place and 8TH Ave.

These segments of new pipe, isolated at all ends, will be protected by a cathodic protection system designed by CorrTech. Work is being completed under CorrTech, Inc. Job No. 9065, Task Order 025, and issued under contract GEDRC001, registration number 20121401831.

Field testing was performed on March 31, 2016 in order to obtain soil resistivity data and to perform stray current monitoring in the approximate areas in which the new steel water main is to be installed. During this visit, testing was completed in specific areas associated with the route of the new piping system. Data collected has been used to design the sacrificial cathodic protection system. In addition to the field testing, a cursory review of area utilities was completed.

CorrTech, Inc. provides corrosion engineering expertise in accordance with specifications section 5.04A. Furnishing, installing and testing corrosion control and/or cathodic protection System was done in accordance with New York City Department of Environmental Protection (NYCDEP) "Specifications for Trunk Main Work".[1]

CONCLUSION

Based on the field testing protocol and test results obtained during the system evaluation and energization, the following conclusions are presented:

1. The average soil resistivity measured along the construction route was found to be approximately 10,727 ohm-cm. Measured values ranged from 2,000 ohm-cm to 25,000 ohm-cm. The soil resistivity study indicates that the area soils are classified from highly corrosive to mildly corrosive to metallic structures. Steel piping installed in this area will require corrosion control measures that will include a bonded tape wrap external dielectric coating system, and sacrificial anode cathodic protection that will provide adequate corrosion control for in excess of 50 years.

2. Stray current effects measured along the construction route are considered to be insignificant, however, there is a considerable network of subway lines in the area.

[1] This publication includes "Special Provisions for Trunk Main Work"; and "Specification for Furnishing, Delivering and Laying Steel Pipe and Appurtenances".

RECOMMENDATIONS

While the soils in the area are considered corrosive, the minimum life expectancy of 50 years must be considered. In order to protect against passive corrosion and active corrosion caused by stray current, the newly installed steel pipe should be installed with an external coating system, electrical isolation, and sacrificial anode type cathodic protection system. The following are required for the system to function as designed:

Flange isolation assemblies are required where the new steel pipe connects to existing piping. Insulating flanges must also be installed at all butterfly valve chambers and at any/all ductile iron or cast iron main connections. These have been indicated on the design drawings

The new steel piping must have a high quality dielectric coating, such as the tape wrap coating system, for any and all steel pipe surfaces that are in contact with the surrounding soil. The dielectric coating system should be applied to all piping associated with the air release and blow-off assemblies.

Sacrificial magnesium anodes, permanent reference electrodes, pipe test wires, steel counter electrodes and flush-to-grade test stations at the locations indicated on the design drawings must be installed adjacent to the direct-buried piping, as per design drawings. All test stations must be installed on the inside of nearby curbs in order to prevent the enclosures from being subject to vehicular traffic and to make them easier to locate for future testing.

FRP shields must be installed around the pipe at any/all points of contact with reinforced concrete piles or similar structures. Electrical isolation between the new steel piping and other structures is of critical importance.

Final testing shall be performed by CorrTech personnel in concert with the REI team. Testing must verify that the installed cathodic protection system meets the criteria set forth by NACE International Standard Practice SP0169, which requires control of external corrosion on underground or submerged metallic piping systems at all locations.

Based on the cathodic protection design worksheets and pipe network, the following table summarizes the direct-buried pipe segments for BED 798:

New Pipe Segments

Segment No.	Drawing	Location	72-inch Pipe Length (ft)	48-inch Pipe Length (ft)	Gnd beds	Anodes	CuSO4 Ref. Cells	Rebar
SEGMENT 1	BED-798-CP-2, 3 and 4	ST JOHNS PLACE FROM 5TH AVE TO 8TH AVE	2201		6	150	7	7
SEGMENT 2	BED-798-CP-2, 5, 6 and 7	PARK PLACE FROM 5TH AVE TO 6TH AVE; 6TH AVE FROM PARK PLACE TO UNION ST.	1899	37	6	150	10	10
SEGMENT 3	BED-798-CP-4 and 8	8TH AVE FROM ST JOHNS PLACE TO FLATBUSH AVE & STERLING PLACE	353	22	2	32	4	4
SEGMENT 4	BED-798-CP-4 and 8	8TH AVE AND ST JOHNS PLACE	289	18	1	25	2	2
		TOTALS	**4742**	**77**	**15**	**357**	**23**	**23**

DISCUSSION

The coated steel water main piping associated with project BED-798 consists of the installation of 72-in and 48-in open trench steel water main to replace the existing main.

The purpose of the pre-constructing testing and subsequent evaluation is to quantify the levels of stray traction DC currents and to evaluate the area soil resistivity along the proposed construction route. Stray current testing was performed in and around the area where the new pipe will be installed. Insignificant stray current effects were measured near the MTA subway tracks at the three (3) locations monitored. Test locations are indicated on a general map, Appendix I.

A reference cell-to-reference cell potential profile obtained in the area indicates that potential variations are considered insignificant as well. The potential measurements obtained indicated variations of approximately 0.062-volts or less (as monitored over a 30-minute period). The proposed area of construction for the new steel water main being installed as part of BED-798 will be subjected to minimal adverse effects from stray traction DC currents. Mitigation techniques employed in this design include a dielectric coating of the pipe, the use of galvanic anodes for corrosion protection, and proper isolation of the piping segments subjected to the stray current.

Soil resistivity measurements were obtained at twenty-two (22) locations using a Collins Rod and calibrated Wheatstone Bridge. Depths obtained ranged from 3-feet to 4-feet. The data obtained is shown in Appendix I of this report. Soil resistivity ranged from a low of 2k ohm-cm to a high of 25k ohm-cm. Low resistivity areas were measured at locations that are likely subject to accumulation of road salt, among other contaminants. The mean soil resistivity is approximately 10.7k ohm-cm. This is a reasonable representation of the average soil resistivity in this area.

The measurement of soil resistivity has been used for years as an indicator of the corrosivity of soil. Soil resistivity is the reciprocal of conductivity; the lower the resistivity, the easier current flows through the soil. Of the measurable soil characteristics, resistivity is generally accepted as the primary indicator of soil corrosivity. Resistivity is a property of the bulk volume of soil and electrolytes.

Although no universal standard has been accepted, (by an organization such as the American Society for Testing and Materials or the National Association of Corrosion Engineers), it is generally agreed that the classification shown below, or other similar classifications, reflect soil corrosivity.

Resistivity (Ohm-Cm)	Classification
< 1,000	Extremely Corrosive
1,000 to 3,000	Highly Corrosive
3,000 to 5,000	Corrosive
5,000 to 10,000	Moderately Corrosive
10,000 to 25,000	Mildly Corrosive
> 25,000	Progressively Less Corrosive

The above table provides qualitative insight to the expected corrosion exposure of a metallic structure in a soil of known resistivity. Accordingly, deterioration can generally be expected to be rapid and relatively severe in soils below 1,000 ohm-cm. This does not mean, however, that severe corrosion will not occur in soils of higher resistivity. In fact, depending on chemical conditions, severe corrosion can occur in soils above 25,000 ohm-cm. The table only indicates that the latter occurrence is generally not observed.

The review of the plans for the new steel water main indicates that there are multiple ties to existing structures. The installation of insulating flanges is required for any/all tie-ins to the existing water supply network, as well as any butterfly valve connections and at any/all ductile iron or cast iron distribution tie-in points. The installation of electrical isolation flange assemblies produces a more concise, manageable cathodic protection system.

The cathodic protection design created by CorrTech, Inc. assumes that the new piping will be electrically isolated and provided with a high quality dielectric coating system, (such as the tape wrap or polyurethane coating system) and installed on all steel piping in contact with the soil environment. The piping associated with air cock hydrants and blow-offs should be coated with this coating system as well as electrically isolated from the steel trunk water main. There will be a total of 4 distinct segments associated with the ED 798 new pipe installation project. Please refer to Appendix I for the associated Ground Bed Design Worksheets.

DESIGN PARAMETERS

The following cathodic protection design criteria have been applied to facilitate the final design calculations for the new pipe segments:

- Percent of bare pipe 1.25%.
- Required current density 1.25 mA/ft^2 for direct buried piping.
- Pipe coating quality 50,000 ohm-cm
- 50-year design life for the cathodic protection anodes
- Anode to steel pipe driving potential of 1.0 volt
- Anode consumption rate of 17-pounds per ampere-year
- 50% anode consumption utilization factor

The magnesium anodes will be divided into groups and these groups will be distributed along the direct bury piping segments. Installing the anodes in individual groups enables current distribution to the 72-in piping in each segment, and provides multiple ground beds as backup in the event of damage to one groundbed.

The cathodic protection design has been prepared in accordance with NACE SP0169. NACE Standard Practice SP0169 (formerly RP0169), "Control of External Corrosion on Underground or Submerged Metallic Piping Systems". This standard practice presents procedures and practices for achieving effective control of external corrosion on buried or submerged metallic piping systems.

These recommendations are also applicable to many other buried or submerged metallic structures. They are intended for use by corrosion control personnel concerned with the corrosion of buried or submerged piping systems, including oil, gas, water, and similar structures. This standard describes the use of electrically insulating coatings, electrical isolation, and cathodic protection as external corrosion control methods. The standard contains specific provisions for the application of cathodic protection to existing bare, existing coated and to new piping systems. Also included are procedures for control of interference currents on pipelines.

Sacrificial anode cathodic protection provides protection with no external power source or rectifier. Sacrificial anodes are designed to corrode, thereby protecting the steel structure being installed. Energy for the sacrificial anode system is provided by the difference in the electrochemical level between the anode and the structure being protected. Typically, magnesium anodes are utilized to protect steel structures. The magnesium anode will corrode preferentially when connected to steel as part of a cathodic protection system. This is due to the fact that it sits at a higher electrochemical level.

A sacrificial anode installation is also a DC circuit with positive current supplied by the anodes and a return negative current supplied from the structure. The driving voltage of the sacrificial anode circuits is approximately 1.0 volt, the difference between magnesium and steel.

Ohm's Law (E=IR) is valid for DC circuits, where E is the driving voltage, or rectifier output, of the circuit, I is the resulting current magnitude and R is the resistance of the circuit. Proper system design seeks to minimize the resistance of the circuit through the use of an anode ground bed design. Sacrificial anode systems do not provide as much energy output as the impressed current design and therefore do not function properly in some applications where cathodic protection is required. Sacrificial systems require that the structure is first coated with a tightly adhered coating system and is also electrically isolated from all other metallic structures and system components. It is important to understand that pipe coating alone is not sufficient to provide complete corrosion control. Coatings must be supplemented with cathodic protection.[2]

NACE requirements specify that the cathodic protection of buried steel structures must be evidenced by two criteria. Firstly, adequate steel polarization is needed to ensure that the electrochemical processes have been established in order to arrest corrosion of the steel surface. Secondly, the cathodic protection design should be constructed and implemented in order to allow for field-testing protocol. Protection levels with respect to polarization criteria can then be verified. All testing is performed in order to demonstrate that adequate cathodic polarization exists on the protected structure. Polarization criteria must take into account any significant drop in the field measurements conducted. This is important both to satisfy the regulations as well as to ensure the preservation of pipe integrity. The primary focus of testing protocol and system design is to ensure that corrosion of any exposed steel has been mitigated.

Sacrificial anode design utilizes a number of electrical parameters as input to the CorrTech, Inc. design calculation worksheet. The calculation worksheets for the individual pipe segments are included in this report as Appendix I.

In addition to the soil resistivity data, pipe geometry and anode dimensions and weight, the above design criteria are inputs to the design. The anode-to-remote earth resistance calculation is based on Dwight's Equation for a single horizontal anode.

$$R = \left(\frac{0.00521\rho}{L}\right)\left(\ln\left(\frac{4L^2 + 4L\sqrt{s^2 + L^2}}{dS}\right) + \frac{S}{L} - \frac{\sqrt{S^2 + L^2}}{L} - 1\right)$$

Where
R = resistance in ohms
L = anode length in feet
S = twice the depth of anode in feet
d = anode diameter in feet
ρ = resistivity in ohm-cm
ln is the natural logarithm function

[2] However, as defined in Sections 4 and 5 of NACE SP0169, cathodic protection can be provided to uncoated structures under certain conditions.

This calculation provides the resistance for one (1) anode set in the measured average soil resistivity. The resistance to ground of the pipe is also calculated in the worksheet. Both the theoretical current requirement based on 1.25 mA/Ft² applied to the 1.25% of bare steel pipe and the circuit resistance of the pipe and anodes are calculated in the worksheet for the new pipe installation. The number of anodes to be installed is a variable input in the worksheet that determines total anode circuit resistance based on parallel resistance theory. The check in the design calculation worksheet indicates that the comparison of theoretical current compared to the field-tested circuit resistance, (as determined by the number of anodes to be installed), is between 0 and 25% and is in agreement.

The final total anode current output value is used to calculate the life of the anode system based on the magnesium anode consumption rate and 50% utilization. The life expectancy of anodes on these cathodically protected piping segments is in excess of 100 years.

Based on the cathodic protection design worksheets and pipe network, the following table summarizes the new buried pipe segments for BED-798:

Segment No.	Drawing	Location	72-inch Pipe Length (ft)	48-inch Pipe Length (ft)	Gnd beds	Anodes	CuSO4 Ref. Cells	Rebar
SEGMENT 1	BED-798-CP-2, 3 and 4	ST JOHNS PLACE FROM 5TH AVE TO 8TH AVE	2201		6	150	7	7
SEGMENT 2	BED-798-CP-2, 5, 6 and 7	PARK PLACE FROM 5TH AVE TO 6TH AVE; 6TH AVE FROM PARK PLACE TO UNION ST.	1899	37	6	150	10	10
SEGMENT 3	BED-798-CP-4 and 8	8TH AVE FROM ST JOHNS PLACE TO FLATBUSH AVE & STERLING PLACE	353	22	2	32	4	4
SEGMENT 4	BED-798-CP-4 and 8	8TH AVE AND ST JOHNS PLACE	289	18	1	25	2	2
		TOTALS	**4742**	**77**	**15**	**357**	**23**	**23**

APPENDIX I

- Soil Resistivity Tabulations
- Stray Current Test Results
- Cathodic Protection Design Worksheet, Segments 1 through 4
- Material List- Engineers Estimates of New Pipe

Client: NYC DDC
Project: BED 798 - Task Order 025 - Brooklyn, NY
CorrTech Job Number: 9065
Date: 7/8/2016

Test Number	Resistivity (ohm-cm)	Location	Soil Type
		SEGMENT 1: ST JOHN'S PL	
1	7,000	St. John's Pl and 5th Ave	Tree bed
2	11,000	St John's Pl 100-ft East of 5th Ave	Tree bed
3	12,000	St John's Pl 200-ft East of 5th Ave	Tree bed
4	2,000	St John's Pl 500-ft East of 5th Ave	Tree bed
5	10,000	St John's Pl & 6th Ave	Tree bed
6	5,000	St John's Pl 145-ft East of 6th Ave	Tree bed
7	4,500	St John's Pl 355-ft East of 6th Ave	Tree bed
8	15,000	St John's Pl 505-ft East of 6th Ave	Tree bed
9	11,000	St John's Pl & 7th Ave	Soil - sidewalk
10	17,500	St John's Pl 165-ft East of 6th Ave	Tree bed
11	3,000	St John's Pl 330-ft East of 6th Ave	Tree bed
12	14,000	St John's Pl 480-ft East of 6th Ave	Tree bed
13	9,000	St John's Pl & 8th Ave	Tree bed
AVG:	**9,308**	**(ohm-cm)**	**St John's Pl Average (1-13)**
		SEGMENT 2: 6TH AVE & PARK PL	
14	7,000	6th Ave & Union St	Tree bed
15	5,000	6th Ave & Berkeley Pl	Tree bed
16	9,000	6th Ave & Lincoln Pl	Tree bed
17	20,000	6th Ave & Sterling Pl	Tree bed
18	15,000	6th Ave & Park Pl	Tree bed
19	5,000	Park Pl 195ft South of 6th Ave	Tree bed
20	10,000	Park Pl 295ft South of 6th Ave	Tree bed
21	25,000	Park Pl 505ft South of 6th Ave	Tree bed
22	19,000	Park Pl & 5th Ave	Tree bed
AVG:	**12,778**	**(ohm-cm)**	**6th Ave & Park Pl Average (14-22)**
AVG:	**10,727**	**(ohm-cm)**	**TOTAL AVERAGE (1-22)**

Client:	NYC DDC	CorrTech Job Number:	9065
Project:	BED 798 - Task Order 025 - Brooklyn, NY	Date:	7/8/2016

Test Number	Location	Start Time	End Time	DC Potential Variations (mV DC)		
				Min	Max	RANGE
1	6th Ave & Lincoln Pl	13:07	13:17	-94	-74	20
2	St. John's Pl & 5th Ave	13:30	13:40	-24	11	35
3	Flatbush Ave & Steinway Pl	14:01	14:21	-42	20	62

CorrTech Inc., Groundbed Design Worksheet
NYC DDC Water Trunk Main Cathodic Protection

Client:	NYC DDC	Project:	BED-798
Date:	7/8/16		St. John's Place - 5th Ave to 8th Ave
Description:	2201-ft of 72-in Water Trunk Main		Brooklyn, NY
Segment:	1		

Structure Calculations		ENTER	SURFACE AREA
Length of pipe	ft	2201	41,467 ft2
Diameter	ft	6	
Length of pipe	ft		0 ft2
Diameter	ft		
			41,467 ft2

Circuit Calculations			
Soil Resistivity (ohm-cm)	9,308 ohm-cm	***average of 13 resistivities**	7
Coating Quality (% bare)	1.25%		
Pipe Surface requiring protection	518.34 FT^2		
Pipe electrically isloated (yes/no)	yes		
Coating quality OHM-FT2	50000 OHM-FT^2		
Pipe to Earth Resistance	1.21 OHM		
Theoretical Current Required (ma/ft2)	1.25 mA/ft^2		
Theoretical Current Requirements	0.6479 AMPS	0.248801	

Anode Parameters			**Individual anode resistance**
Anode Type	Magnesium anode, prepackaged		20.11 square of S2+L2 factor
Anode Weight (lbs)	17		23.00 resistivity x .0052 factor
Anode Ingot Diameter (feet)	**0.292**	**see notes below**	1.51 log value
Anode Ingot Length (feet)	**2.104**	**see notes below**	**55.46 Horizontal anode resistance**
2 time anode depth (feet)	20		**70.18 Vertical anode resistance**

Circuit Resistance Current Requirements					
Anode Resistance to Earth	plug in Resistance value	55.46	OHMS		
Driving Potential (v)		1	VOLTS		
Individual anode output		0.018	AMPS	**Check**	**Between 0% and 25%**
Number of anodes to be installed		**150**		2.04%	Yes
Total circuit resistance		1.58	OHMS		
Current output of system		0.6347	AMPS		
Consumption Rate (lb/A-yr)		**17.00**			
Anode life based on anodes to be installed		**118.16**	**YEARS**	considers 50% anode efficiency	

Design conforms to the following standards:
National Association of Corrosion Engineers (NACE)
Standard Recommended Practice SP 0169 latest revision

CORROSION NACE SCOTT H. PAUL 4183 SPECIALIST

NOTES on anode dimensions:

Bare anode dimensions were considered due to the fact that the life of the anode is more dependent on the actual anode size than the packaging backfill.

The backfill may leech into surrounding earth as time progresses, which will cause depletion not related to the anode performance or cathodic protection mechanisms.

Other than erosion / leeching effects described above, the anode backfill is NOT consumable and will remain stable throughout the operational life of the anode.

Dwight's formula, utilized above, does not consider the inherent resistivity of the backfill.

For this reason, bare anode dimensions, when factored into the calculations, offer more conservative estimates as to the number of anodes required.

CorrTech Inc., Groundbed Design Worksheet
NYC DDC Water Trunk Main Cathodic Protection

Client:	NYC DDC	Project:	BED-798
Date:	7/8/16		Park Place - 5th Ave to 6th Ave; 6th Ave from Park P
Description:	1899-ft of 72-in and 37-ft of 48-in Water Trunk Main		Brooklyn, NY
Segment:	2		

Structure Calculations		ENTER	SURFACE AREA
Length of pipe	ft	1899	35,777 ft2
Diameter	ft	6	
Length of pipe	ft	37	465 ft2
Diameter	ft	4	
			36,242 ft2

Circuit Calculations		
Soil Resistivity (ohm-cm)	12,778 ohm-cm	***average of 9 resistivities**
Coating Quality (% bare)	1.25%	
Pipe Surface requiring protection	453.02 FT^2	
Pipe electrically isloated (yes/no)	yes	
Coating quality OHM-FT2	50000 OHM-FT^2	
Pipe to Earth Resistance	1.38 OHM	
Theoretical Current Required (ma/ft2)	1.25 mA/ft^2	
Theoretical Current Requirements	0.5663 AMPS	0.2174513

Anode Parameters		**Individual anode resistance**
Anode Type	Magnesium anode, prepackaged	20.11 square of S2+L2 factor
Anode Weight (lbs)	17	31.58 resistivity x .0052 factor
Anode Metal Diameter (feet)	**0.292 see notes below**	1.51 log value
Anode Metal Length (feet)	**2.104 see notes below**	**76.14 Horizontal anode resistance**
2 time anode depth (feet)	20	**96.34 Vertical anode resistance**

Circuit Resistance Current Requirements					
Anode Resistance to Earth	plug in Resistance value	76.14	OHMS		
Driving Potential (v)		1	VOLTS		
Individual anode output		0.013	AMPS	**Check**	**Between 0% and 25%**
Number of anodes to be installed		150		6.43%	Yes
Total circuit resistance		1.89	OHMS		
Current output of system		0.5299	AMPS		
Consumption Rate (lb/A-yr)		17.00			
Anode life based on anodes to be installed		**141.54**	**YEARS**	considers 50% anode efficiency	

Design conforms to the following standards:
National Association of Corrosion Engineers (NACE)
Standard Recommended Practice SP 0169 latest revision

CORROSION NACE SCOTT H. PAUL 4183 SPECIALIST

NOTES on anode dimensions:

Bare anode dimensions were considered due to the fact that the life of the anode is more dependent on the actual anode size than the packaging backfill.

The backfill may leech into surrounding earth as time progresses, which will cause depletion not related to the anode performance or cathodic protection mechanisms.

Other than erosion / leeching effects described above, the anode backfill is NOT consumable and will remain stable throughout the operational life of the anode.

Dwight's formula, utilized above, does not consider the inherent resistivity of the backfill.

For this reason, bare anode dimensions, when factored into the calculations, offer more conservative estimates as to the number of anodes required.

CorrTech Inc., Groundbed Design Worksheet
NYC DDC Water Trunk Main Cathodic Protection

Client:	NYC DDC	Project:	BED-798
Date:	7/8/16		8th Ave from ST Johns PL. to Flatbush Ave and Sterl
Description:	356-ft of 72-in and 22-ft of 48-in Water Trunk Main		Brooklyn, NY
Segment:	3		

Structure Calculations		ENTER	SURFACE AREA
Length of pipe	ft	356	6,707 ft2
Diameter	ft	6	
Length of pipe	ft	18	226 ft2
Diameter	ft	4	
			6,933 ft2

Circuit Calculations			
Soil Resistivity (ohm-cm)	9,308	ohm-cm	***average of 13 resistivities**
Coating Quality (% bare)	1.25%		
Pipe Surface requiring protection	86.66	FT^2	
Pipe electrically isloated (yes/no)	yes		
Coating quality OHM-FT2	50000	OHM-FT^2	
Pipe to Earth Resistance	7.21	OHM	
Theoretical Current Required (ma/ft2)	1.25	mA/ft^2	
Theoretical Current Requirements	0.1083	AMPS	0.0415987

Anode Parameters			**Individual anode resistance**
Anode Type	Magnesium anode, prepackaged		20.11 square of S2+L2 factor
Anode Weight (lbs)	17		23.00 resistivity x .0052 factor
Anode Metal Diameter (feet)	**0.292**	**see notes below**	1.51 log value
Anode Metal Length (feet)	**2.104**	**see notes below**	**55.46 Horizontal anode resistance**
2 time anode depth (feet)	**20**		**70.18 Vertical anode resistance**

Circuit Resistance Current Requirements					
Anode Resistance to Earth	plug in Resistance value	55.46	OHMS		
Driving Potential (v)		0.9	VOLTS		
Individual anode output		0.016	AMPS	**Check**	**Between 0% and 25%**
Number of anodes to be installed		32		7.12%	Yes
Total circuit resistance		8.94	OHMS		
Current output of system		0.1006	AMPS		
Consumption Rate (lb/A-yr)		17.00			
Anode life based on anodes to be installed		**159.02**	**YEARS**	considers 50% anode efficiency	

Design conforms to the following standards:
National Association of Corrosion Engineers (NACE)
Standard Recommended Practice SP 0169 latest revision

CORROSION NACE SCOTT H. PAUL 4183 SPECIALIST

NOTES on anode dimensions:

Bare anode dimensions were considered due to the fact that the life of the anode is more dependent on the actual anode size than the packaging backfill.

The backfill may leech into surrounding earth as time progresses, which will cause depletion not related to the anode performance or cathodic protection mechanisms.

Other than erosion / leeching effects described above, the anode backfill is NOT consumable and will remain stable throughout the operational life of the anode.

Dwight's formula, utilized above, does not consider the inherent resistivity of the backfill.

For this reason, bare anode dimensions, when factored into the calculations, offer more conservative estimates as to the number of anodes required.

CorrTech Inc., Groundbed Design Worksheet
NYC DDC Water Trunk Main Cathodic Protection

Client:	NYC DDC	Project:	BED-798
Date:	7/8/16		St. John's Place and 8th Ave
Description:	289-ft of 72-in and 18-ft of 48-in Water Trunk Main		Brooklyn, NY
Segment:	4		

Structure Calculations		ENTER	SURFACE AREA
Length of pipe	ft	289	5,445 ft2
Diameter	ft	6	
Length of pipe	ft	22	276 ft2
Diameter	ft	4	
			5,721 ft2

Circuit Calculations		
Soil Resistivity (ohm-cm)	9,308 ohm-cm	***average of 13 resistivities**
Coating Quality (% bare)	1.25%	
Pipe Surface requiring protection	71.51 FT^2	
Pipe electrically isloated (yes/no)	yes	
Coating quality OHM-FT2	50000 OHM-FT^2	
Pipe to Earth Resistance	8.74 OHM	
Theoretical Current Required (ma/ft2)	1.25 mA/ft^2	
Theoretical Current Requirements	0.0894 AMPS	0.0343265

Anode Parameters			**Individual anode resistance**
Anode Type	Magnesium anode, prepackaged	20.11	square of S2+L2 factor
Anode Weight (lbs)	17	23.00	resistivity x .0052 factor
Anode Metal Diameter (feet)	**0.292 see notes below**	1.51	log value
Anode Metal Length (feet)	**2.104 see notes below**	**55.46**	**Horizontal anode resistance**
2 time anode depth (feet)	20	**70.18**	**Vertical anode resistance**

Circuit Resistance Current Requirements					
Anode Resistance to Earth	plug in Resistance value	55.46	OHMS		
Driving Potential (v)		1	VOLTS		
Individual anode output		0.018	AMPS	**Check**	**Between 0% and 25%**
Number of anodes to be installed		25		-2.09%	Yes
Total circuit resistance		10.96	OHMS		
Current output of system		0.0913	AMPS		
Consumption Rate (lb/A-yr)		17.00			
Anode life based on anodes to be installed		**136.98**	**YEARS**	considers 50% anode efficiency	

Design conforms to the following standards:
National Association of Corrosion Engineers (NACE)
Standard Recommended Practice SP 0169 latest revision

CORROSION NACE SCOTT H. PAUL 4163 SPECIALIST

NOTES on anode dimensions:

Bare anode dimensions were considered due to the fact that the life of the anode is more dependent on the actual anode size than the packaging backfill.

The backfill may leech into surrounding earth as time progresses, which will cause depletion not related to the anode performance or cathodic protection mechanisms.

Other than erosion / leeching effects described above, the anode backfill is NOT consumable and will remain stable throughout the operational life of the anode.

Dwight's formula, utilized above, does not consider the inherent resistivity of the backfill.

For this reason, bare anode dimensions, when factored into the calculations, offer more conservative estimates as to the number of anodes required.

CorrTech Inc.
Client
Project
Contract
Prepared

Task Order 025
NYC DDC
Brooklyn, NY on 6th Ave, Park Pl, St John's Pl, Flatbush Ave
BED 798 NEW PIPE
10/10/2016

Quantity and Cost Estimating

TOTAL-FURNISH AND INSTALL CATHODIC PROTECTION	$208,916.20

Item No	Description	Quantity	Measure	Unit Price Materials	Sub Total mtls	Unit Price Installation	Sub Total inst	Total
1	17-pound high potential magnesium anodes	365	each	$160.00	$58,400.00	$175.00	$63,875.00	**$122,275.00**
2	Stuart Steel Type S Splice Kit	183	each	$26.00	$4,758.00	$50.00	$9,150.00	**$13,908.00**
3	AWG 8 HMWPE, Black (anode header cable)	8,640	feet	$0.90	$7,776.00	$1.00	$8,640.00	**$16,416.00**
4	AWG 10 THWN, Red	3,630	feet	$0.42	$1,524.60	$1.00	$3,630.00	**$5,154.60**
5	AWG 10 THWN, White	880	feet	$0.42	$369.60	$1.00	$880.00	**$1,249.60**
6	AWG 10 THWN, Blue	300	feet	$0.42	$126.00	$1.00	$300.00	**$426.00**
7	AWG 10 THWN, Green	590	feet	$0.42	$247.80	$1.00	$590.00	**$837.80**
8	Thermite welds, CA-15	66	each	$2.80	$184.80	$50.00	$3,300.00	**$3,484.80**
9	Copper-copper sulfate reference cells w/50-ft HMWPE 12 yellow	23	each	$500.00	$11,500.00	$50.00	$1,150.00	**$12,650.00**
10	Counter electrodes w/50-ft AWG 12 THWN Purple	23	each	$48.00	$1,104.00	$50.00	$1,150.00	**$2,254.00**
11	Burndy KS-17 Copper Split bolts (for anode splicing and test stations)	193	each	$4.30	$829.90	$50.00	$9,650.00	**$10,479.90**
12	3M Super 88- Black Electrical Tape (used with splice kit)	61	each	$5.00	$305.00	$0.00	$0.00	**$305.00**
13	3M 130 C Rubber Tape (used with splice kit)	61	each	$5.00	$305.00	$0.00	$0.00	**$305.00**
14	Cans 3M Scotchkote electrical epoxy coating FD (used with splice kit)	19	each	$50.00	$950.00	$0.00	$0.00	**$950.00**
15	Royston Handy-Caps (cover thermite weld)	66	each	$4.25	$280.50	$0.00	$0.00	**$280.50**
16	Test station housing (NYC DEP Standard)	23	each	$500.00	$11,500.00	$250.00	$5,750.00	**$17,250.00**
17	Acrylic Tags for Labeling Test Stations	23	sets	$20.00	$460.00	$10.00	$230.00	**$690.00**
					$100,621.20		$108,295.00	**$208,916.20**

CORNUCH NEW PIPE BREAKDOWN

Client: NY DDC

Project: BED-798, Task Order 025

Job Number: 9065

Date: 10/10/2016

Segment No.	Drawing	Location	72-inch Pipe Length (ft)	48-inch Pipe Length (ft)	Gnd beds	Anodes	CuSO4 Ref. Cells	Rebar
SEGMENT 1	BED-798-CP-2, 3 and 4	ST JOHNS PLACE FROM 5TH AVE TO 8TH AVE	2201		6	150	7	7
SEGMENT 2	BED-798-CP-2, 5, 6 and 7	PARK PLACE FROM 5TH AVE TO 6TH AVE; 6TH AVE FROM PARK PLACE TO UNION ST.	1899	37	6	150	10	10
SEGMENT 3	BED-798-CP-4 and 8	8TH AVE FROM ST JOHNS PLACE TO FLATBUSH AVE & STERLING PLACE	353	22	2	32	4	4
SEGMENT 4	BED-798-CP-4 and 8	8TH AVE AND ST JOHNS PLACE	289	18	1	25	2	2
		TOTALS	4742	77	15	357	23	23

APPENDIX II

- **Cathodic Protection Design Drawings**

BED-798-CP-1 through BED-798-CP-8
BED-798 CPD-1 through BED-798 CPD-4

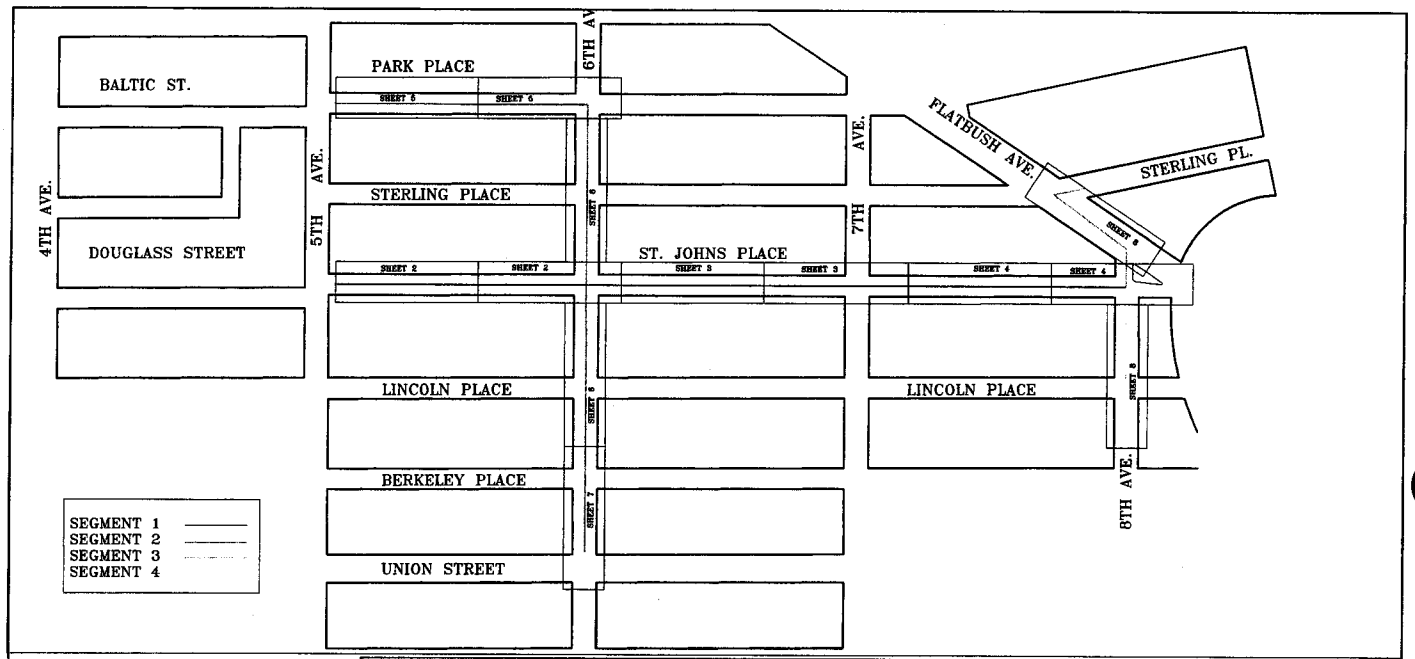

CORRTECH — **NEW PIPE BREAKDOWN**

Client: NY DDC
Project: BED-798, Tech Order 025
Job Number: [illegible]
Date: 7/8/2016

Segment No.	Drawing	Location	72-inch Pipe Length (ft)	48-inch Pipe Length (ft)	Gnd beds	Anodes	CuSO4 Ref. Cells	Rebar
SEGMENT 1	BED-798-CP-2, 3 and 4	ST JOHNS PLACE FROM 5TH AVE TO 8TH AVE	2201		6	150	7	7
SEGMENT 2	BED-798-CP-2, 5, 6 and 7	PARK PLACE FROM 5TH AVE TO 8TH AVE; 6TH AVE FROM PARK PLACE TO 8TH AVE FROM ST JOHNS PLACE TO FLATBUSH AVE & STERLING PLACE	1899	37	6	150	10	10
SEGMENT 3	BED-798-CP-4 and 8		353	22	2	32	4	4
SEGMENT 4	BED-798-CP-4 and 8	8TH AVE AND ST JOHNS PLACE	289	16	1	23	2	2
		TOTALS	4742	77	14	357	23	23

NO.	DATE	DESCRIPTIONS	BY	APP'D
02	7/29/16	REMOVED DESIGN FOR EXISTING PIPES	PB	SP
01	10/10/16	NEW 72" PIPE LENGTHS	PB	SP

REVISIONS

CORRTECH
35 SOUTH STREET
HOPKINTON, MA 01748
(508) 435-6000
www.corrtech-lns.com

DESIGNED: SCOTT PAUL
DRAWN: PATRICK BLUM
CHECKED: TED MEDUM

ENGINEER-IN-CHARGE
DIRECTOR

CLIENT:
DEPARTMENT OF DESIGN & CONSTRUCTION
DIVISION OF INFRASTRUCTURE
BUREAU OF DESIGN

REPLACEMENT OF TRUNK WATER MAIN IN FLATBUSH AVENUS
BOROUGH OF BROOKLYN

CATHODIC PROTECTION SYSTEM

DATE:	DRAWING NUMBER:	SHEET NUMBER:	REV.
7/29/16	BED-798-CP-1	1 OF 12	02

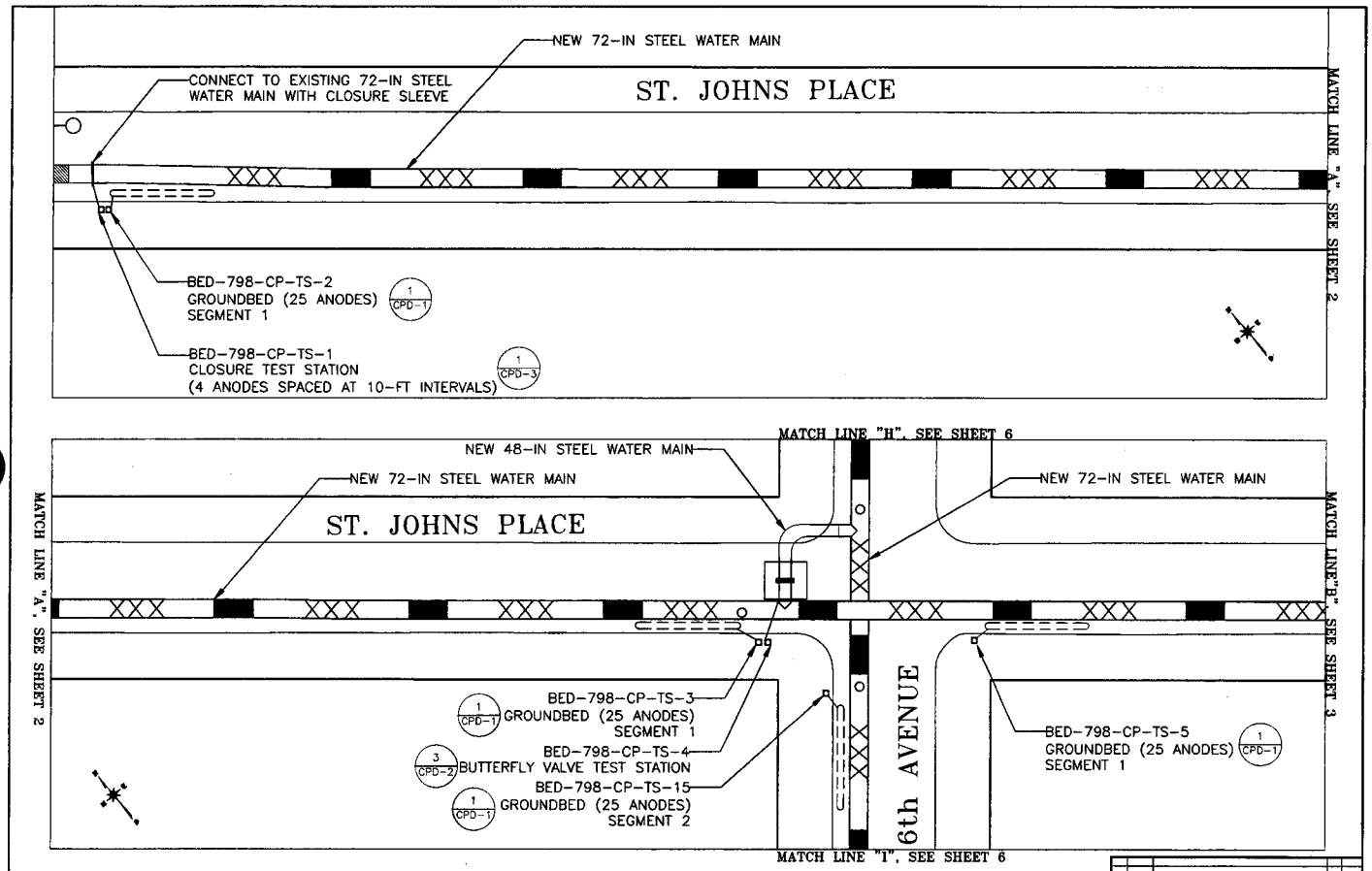
NEW 72-IN STEEL WATER MAIN
CONNECT TO EXISTING 72-IN STEEL WATER MAIN WITH CLOSURE SLEEVE
ST. JOHNS PLACE
MATCH LINE "A", SEE SHEET 2
BED-798-CP-TS-2
GROUNDBED (25 ANODES)
SEGMENT 1
1 CPD-1
BED-798-CP-TS-1
CLOSURE TEST STATION
(4 ANODES SPACED AT 10-FT INTERVALS)
1 CPD-3
MATCH LINE "H", SEE SHEET 6
NEW 48-IN STEEL WATER MAIN
NEW 72-IN STEEL WATER MAIN
NEW 72-IN STEEL WATER MAIN
ST. JOHNS PLACE
MATCH LINE "A", SEE SHEET 2
MATCH LINE "B", SEE SHEET 3
BED-798-CP-TS-3
1 CPD-1 GROUNDBED (25 ANODES)
SEGMENT 1
BED-798-CP-TS-4
3 CPD-2 BUTTERFLY VALVE TEST STATION
BED-798-CP-TS-15
1 CPD-1 GROUNDBED (25 ANODES)
SEGMENT 2
6th AVENUE
BED-798-CP-TS-5
GROUNDBED (25 ANODES) 1 CPD-1
SEGMENT 1
MATCH LINE "I", SEE SHEET 6
CORRTECH
CLIENT:
DEPARTMENT OF DESIGN & CONSTRUCTION
DIVISION OF INFRASTRUCTURE
BUREAU OF DESIGN
REPLACEMENT OF TRUNK WATER MAIN IN FLATBUSH AVENUE
BOROUGH OF BROOKLYN
CATHODIC PROTECTION SYSTEM
7/29/16
BED-798-CP-2
2 OF 12
02

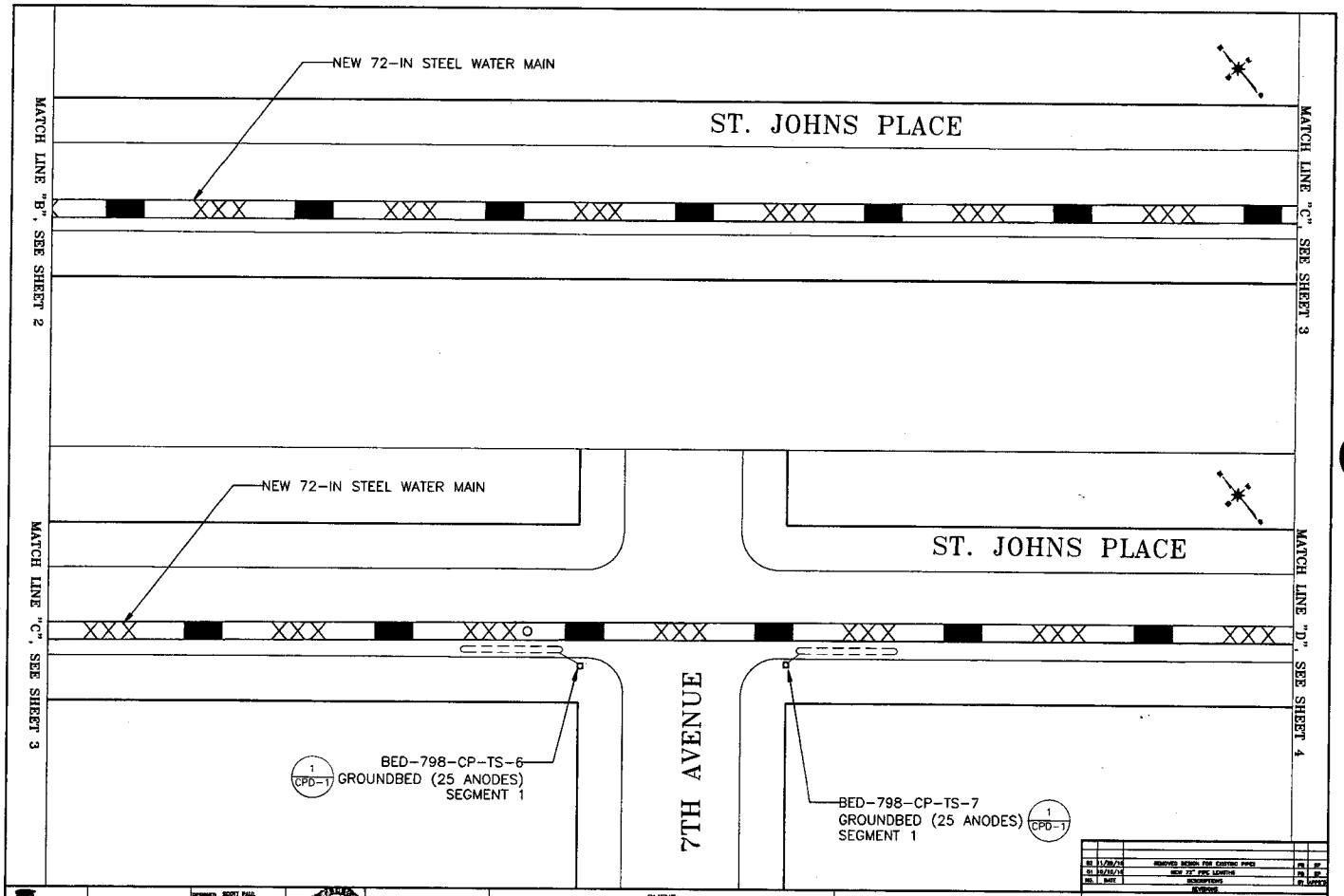

NO.	DATE	DESCRIPTIONS	BY	APPR'D
02	11/29/16	REMOVED DESIGN FOR EXISTING PIPES	PB	SP
01	10/25/16	NEW 72" PIPE LENGTHS	PB	SP

REVISIONS

CORRTECH

DESIGNED: SCOTT PAUL
DRAWN: PATRICK BLUM
CHECKED: TED MOURA

ENGINEER-IN-CHARGE

DIRECTOR

CLIENT:
DEPARTMENT OF DESIGN & CONSTRUCTION
DIVISION OF INFRASTRUCTURE
BUREAU OF DESIGN

REPLACEMENT OF TRUNK WATER MAIN
IN FLATBUSH AVENUS
BOROUGH OF BROOKLYN

CATHODIC PROTECTION SYSTEM

DATE:	DRAWING NUMBER:	SHEET NUMBER:	REV.
7/29/16	BED-798-CP-3	3 OF 12	02

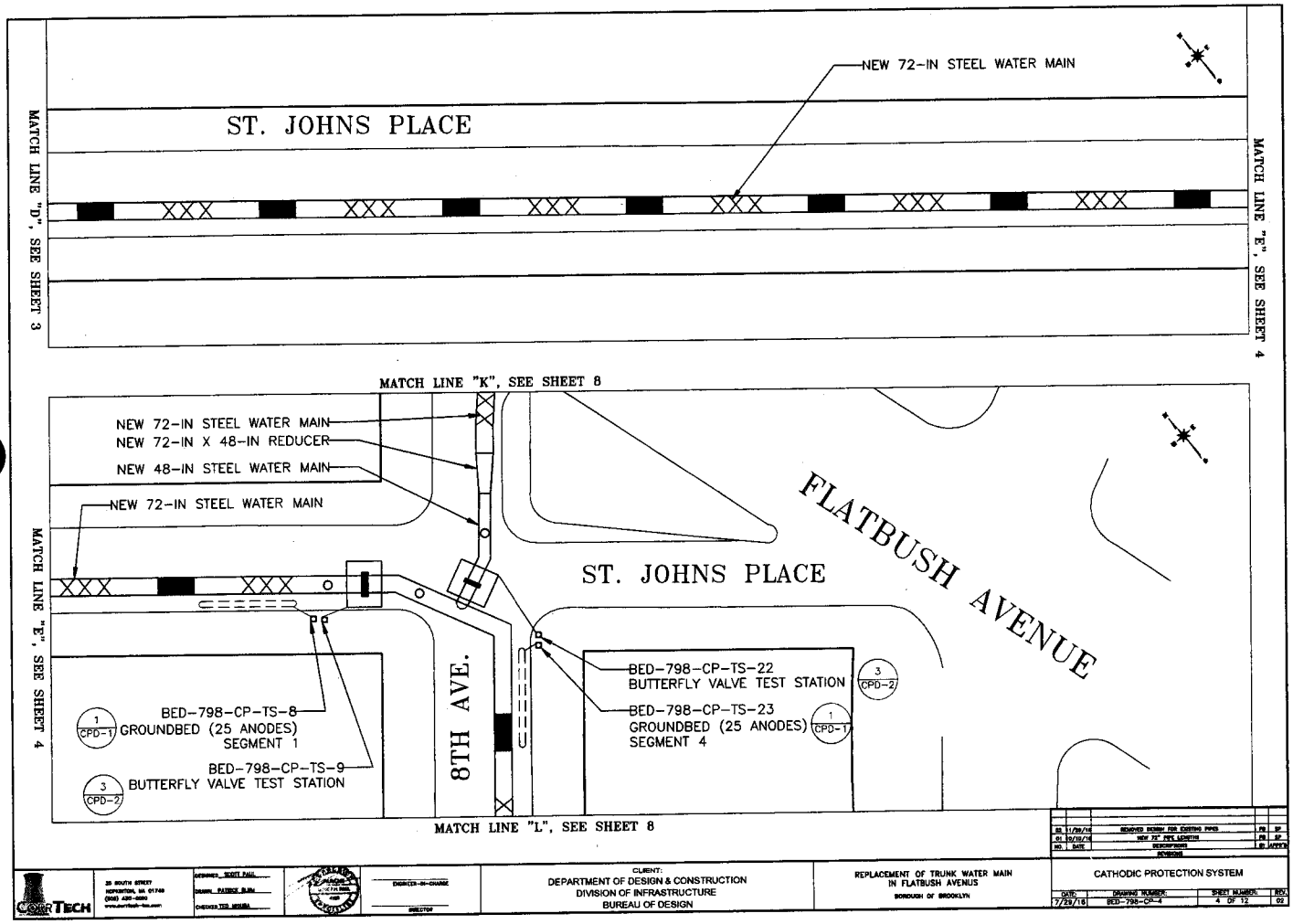
NEW 72-IN STEEL WATER MAIN
ST. JOHNS PLACE
MATCH LINE "D", SEE SHEET 3
MATCH LINE "E", SEE SHEET 4
MATCH LINE "K", SEE SHEET 8
NEW 72-IN STEEL WATER MAIN
NEW 72-IN X 48-IN REDUCER
NEW 48-IN STEEL WATER MAIN
NEW 72-IN STEEL WATER MAIN
FLATBUSH AVENUE
ST. JOHNS PLACE
MATCH LINE "E", SEE SHEET 4
8TH AVE.
BED-798-CP-TS-22
BUTTERFLY VALVE TEST STATION
3 CPD-2
BED-798-CP-TS-23
GROUNDBED (25 ANODES)
SEGMENT 4
1 CPD-1
BED-798-CP-TS-8
1 CPD-1 GROUNDBED (25 ANODES)
SEGMENT 1
BED-798-CP-TS-9
3 CPD-2 BUTTERFLY VALVE TEST STATION
MATCH LINE "L", SEE SHEET 8
CORRTECH
CLIENT:
DEPARTMENT OF DESIGN & CONSTRUCTION
DIVISION OF INFRASTRUCTURE
BUREAU OF DESIGN
REPLACEMENT OF TRUNK WATER MAIN
IN FLATBUSH AVENUS
BOROUGH OF BROOKLYN
CATHODIC PROTECTION SYSTEM
DATE: 7/29/16
DRAWING NUMBER: BED-798-CP-4
SHEET NUMBER: 4 OF 12
REV. 02

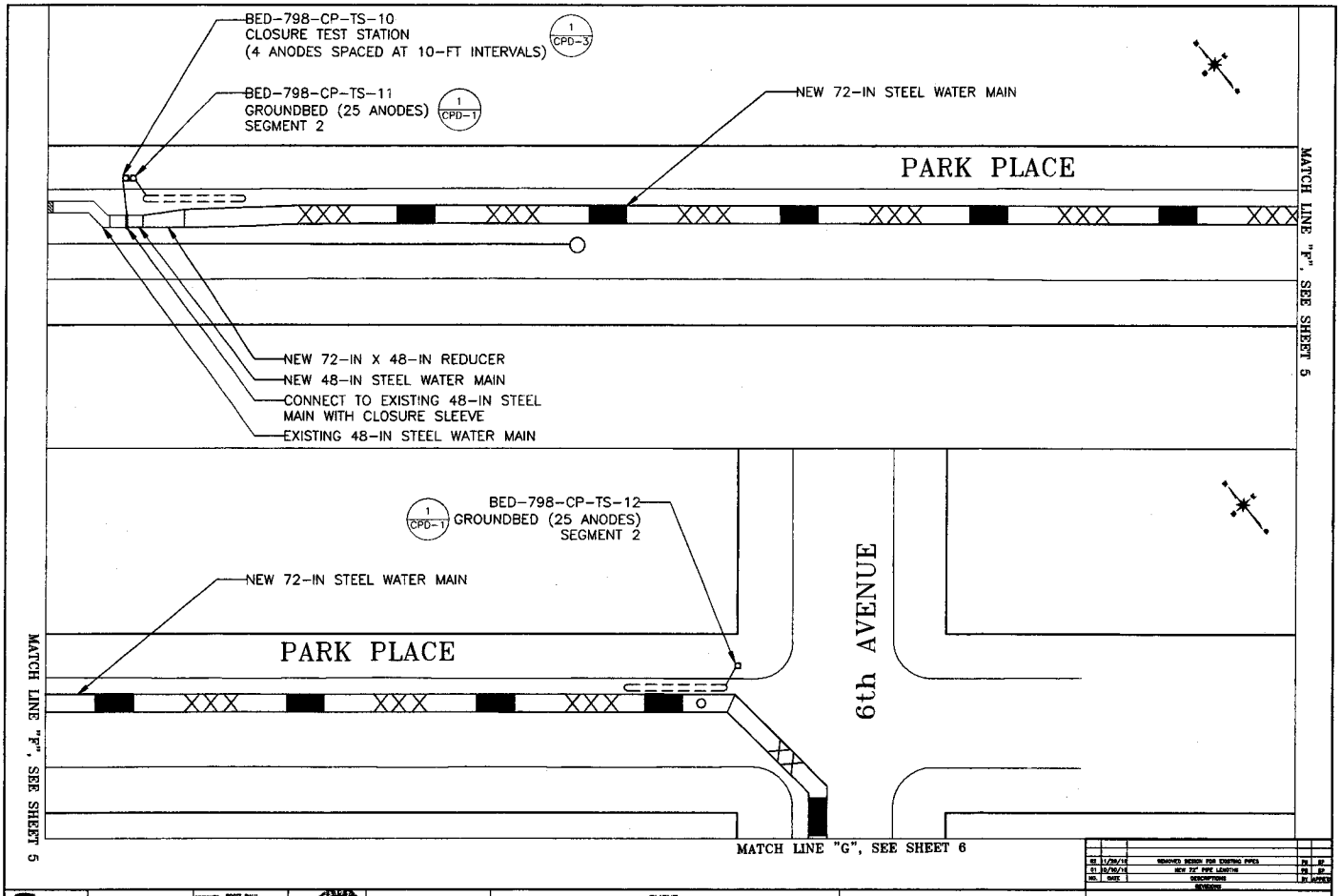

NO.	DATE	DESCRIPTIONS	BY	APPR'D
02	1/29/18	REMOVED DESIGN FOR EXISTING PIPES	PB	SP
01	8/30/16	NEW 72" PIPE LENGTHS	PB	SP

REVISIONS

CORRTECH

25 SOUTH STREET
HOPKINTON, MA 01748
(508) 435-0050
www.corrtech-inc.com

DESIGNED SCOTT PAUL
DRAWN PATRICK BLUM
CHECKED TED MEKUBA

ENGINEER-IN-CHARGE

DIRECTOR

CLIENT:
DEPARTMENT OF DESIGN & CONSTRUCTION
DIVISION OF INFRASTRUCTURE
BUREAU OF DESIGN

REPLACEMENT OF TRUNK WATER MAIN
IN FLATBUSH AVENUE
BOROUGH OF BROOKLYN

CATHODIC PROTECTION SYSTEM

DATE:	DRAWING NUMBER:	SHEET NUMBER:	REV.
7/29/18	BED-798-CP-5	5 OF 12	02

page 25 of 32

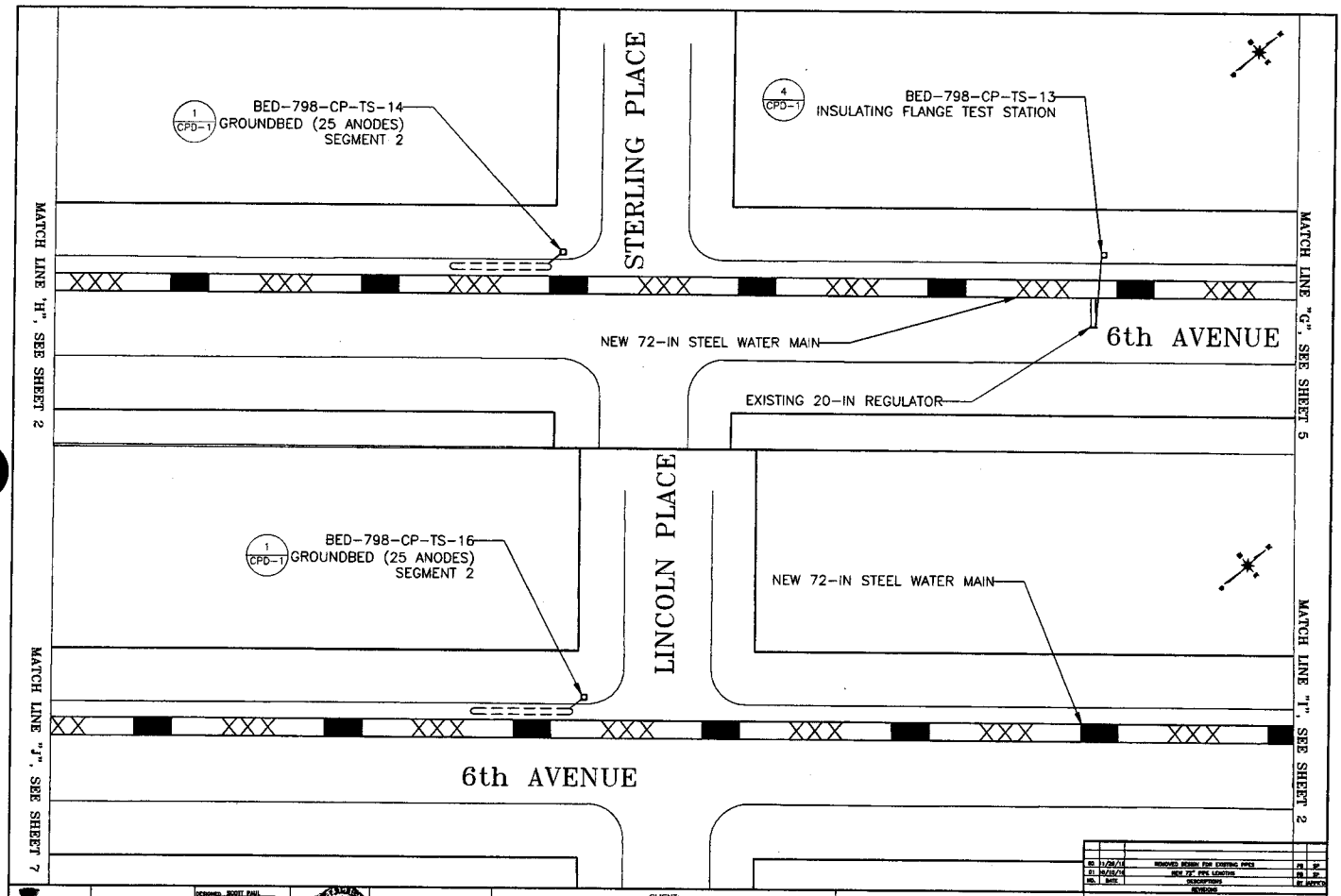

NO.	DATE	DESCRIPTIONS	BY	APPR'D
00	11/26/16	REMOVED DESIGN FOR EXISTING PIPES	PB	SP
01	06/10/16	NEW 72" PIPE LENGTHS	PB	SP

REVISIONS

CORRTECH

DESIGNED: SCOTT PAUL
DRAWN: PATRICK BLUM
CHECKED: TED MIKURA

ENGINEER-IN-CHARGE

DIRECTOR

CLIENT:
DEPARTMENT OF DESIGN & CONSTRUCTION
DIVISION OF INFRASTRUCTURE
BUREAU OF DESIGN

REPLACEMENT OF TRUNK WATER MAIN IN FLATBUSH AVENUS
BOROUGH OF BROOKLYN

CATHODIC PROTECTION SYSTEM

DATE:	DRAWING NUMBER:	SHEET NUMBER:	REV.
7/29/16	BED-798-CP-6	6 OF 12	02

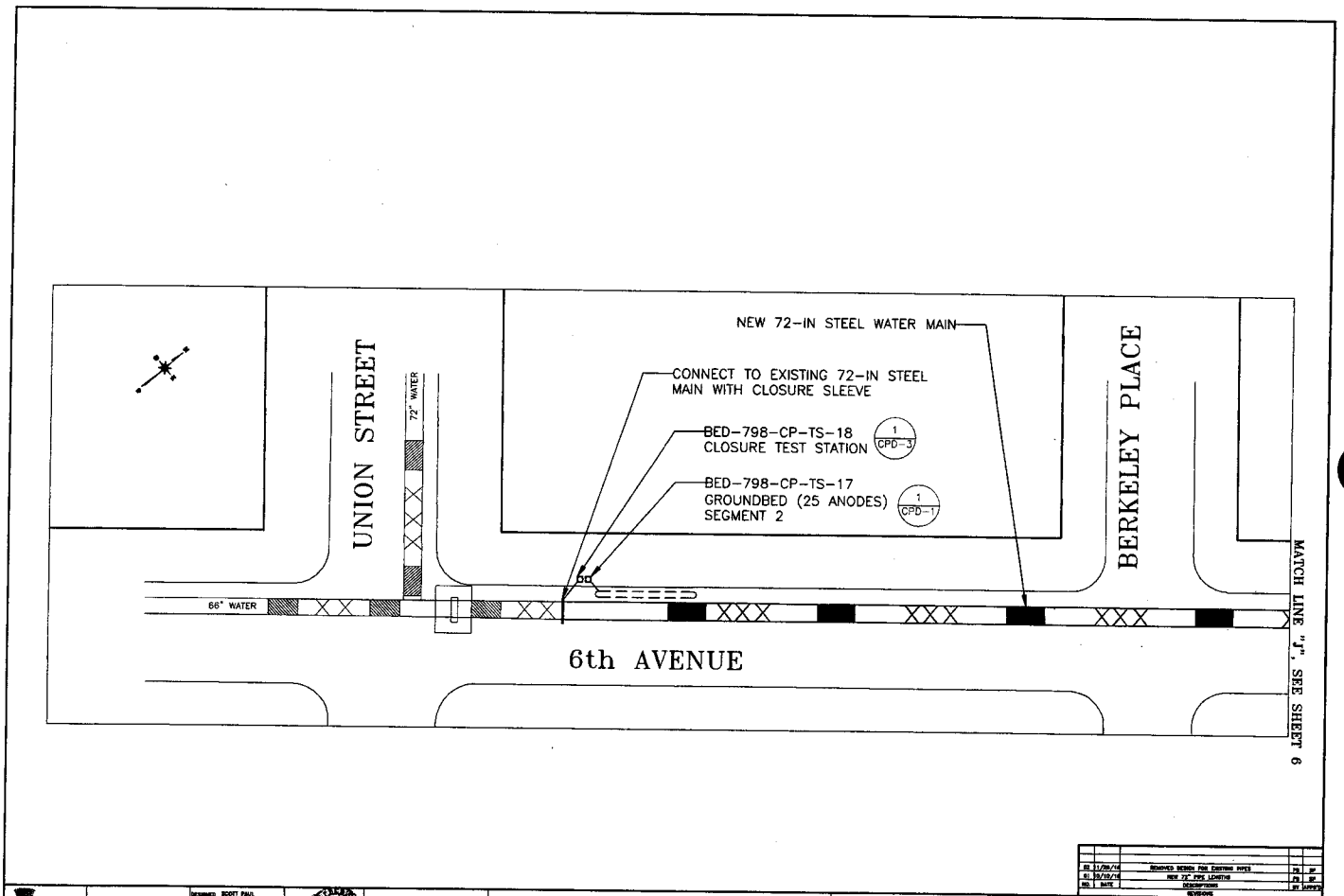

NO.	DATE	DESCRIPTIONS	BY	APPR'D
02	11/20/16	REMOVED DESIGN FOR EXISTING PIPES	PB	BP
01	10/10/16	NEW 72" PIPE LENGTHS	PB	BP

REVISIONS

CORTECH
35 SOUTH STREET
HOPKINTON, MA 01748
(508) 436-0080
www.corrtech-inc.com

DESIGNED SCOTT PAUL
DRAWN PATRICK BLUM
CHECKED TED MOURA

ENGINEER-IN-CHARGE
DIRECTOR

CLIENT:
DEPARTMENT OF DESIGN & CONSTRUCTION
DIVISION OF INFRASTRUCTURE
BUREAU OF DESIGN

REPLACEMENT OF TRUNK WATER MAIN IN FLATBUSH AVENUE
BOROUGH OF BROOKLYN

CATHODIC PROTECTION SYSTEM

DATE:	DRAWING NUMBER:	SHEET NUMBER:	REV.
7/29/16	BED-798-CP-7	7 OF 12	02

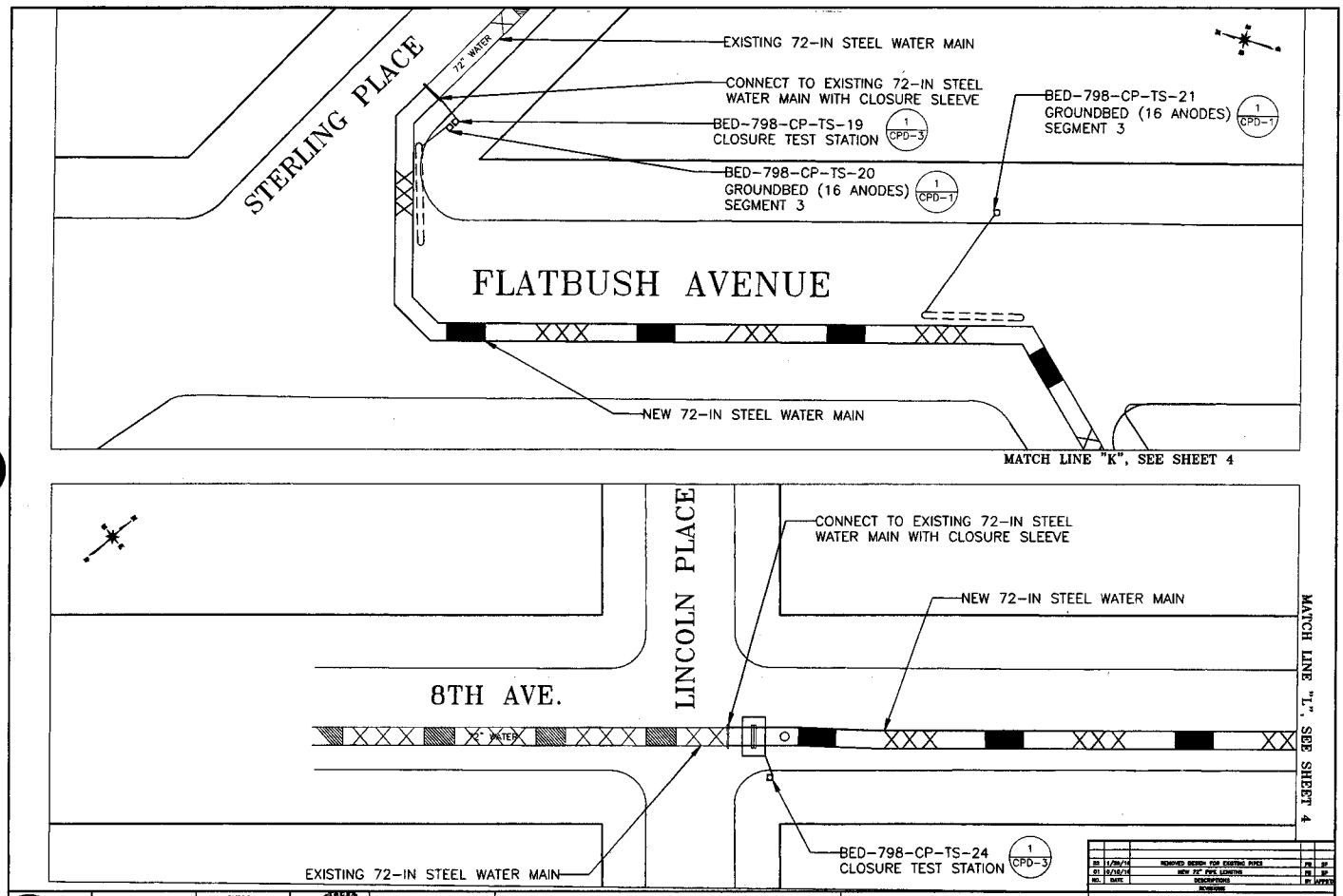
STERLING PLACE
72" WATER
EXISTING 72-IN STEEL WATER MAIN
CONNECT TO EXISTING 72-IN STEEL WATER MAIN WITH CLOSURE SLEEVE
BED-798-CP-TS-19 CLOSURE TEST STATION 1 CPD-3
BED-798-CP-TS-20 GROUNDBED (16 ANODES) SEGMENT 3 1 CPD-1
BED-798-CP-TS-21 GROUNDBED (16 ANODES) SEGMENT 3 1 CPD-1
FLATBUSH AVENUE
NEW 72-IN STEEL WATER MAIN
MATCH LINE "K", SEE SHEET 4
LINCOLN PLACE
CONNECT TO EXISTING 72-IN STEEL WATER MAIN WITH CLOSURE SLEEVE
NEW 72-IN STEEL WATER MAIN
8TH AVE.
72" WATER
MATCH LINE "L", SEE SHEET 4
EXISTING 72-IN STEEL WATER MAIN
BED-798-CP-TS-24 CLOSURE TEST STATION 1 CPD-3
CORRTECH
CLIENT:
DEPARTMENT OF DESIGN & CONSTRUCTION
DIVISION OF INFRASTRUCTURE
BUREAU OF DESIGN
REPLACEMENT OF TRUNK WATER MAIN IN FLATBUSH AVENUS
BOROUGH OF BROOKLYN
CATHODIC PROTECTION SYSTEM
7/29/16
BED-798-CP-8
8 OF 12
02

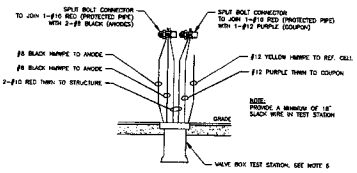

ANODE GROUNDBED TEST STATION WIRING

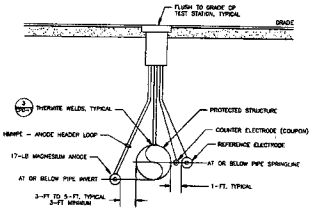

A–A GROUND BED TEST STATION PROFILE

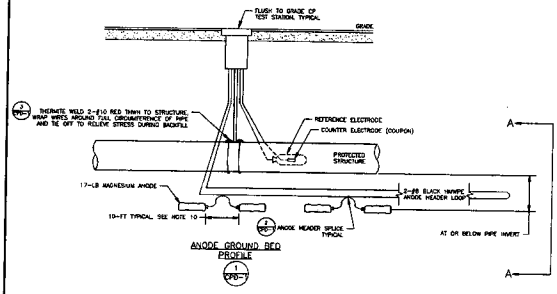

ANODE GROUND BED PROFILE

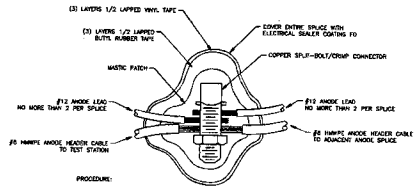

PROCEDURE:

CUT BACK CABLE INSULATION TO SUITABLE LENGTH WITHOUT NICKING COPPER WIRE STRANDS

SAND CABLE INSULATION ALONG 3-IN FROM END OF THE WIRE

CONNECT WIRES WITH SPLIT-BOLT CONNECTOR OR C-CRIMP AND SECURE WITH PROPER TORQUE OR RECOMMENDED CRIMP PRESSURE

ENCAPSULATE THE WIRE CONNECTION WITH THE SQUARE MASTIC SPLICING PATCH, KNEADING THE MASTIC SEALANT SO THAT IT COVERS THE ENTIRE SPLICE AND BONDS COMPLETELY TO ITSELF TO FORM THE PRIMARY BARRIER TO WATER INGRESS

UNDER TENSION, WRAP 3M SCOTCH 130C RUBBER TAPE AROUND THE MASTIC PATCH, WITH 1/2-IN OVERLAP, PROVIDE MINIMUM OF 3 LAYERS OF RUBBER TAPE

UNDER TENSION, WRAP VINYL TAPE AROUND RUBBER TAPE, WITH 1/2-IN OVERLAP PROVIDE MINIMUM OF 3 LAYERS OF VINYL TAPE

COAT ENTIRE SPLICE AND 1-IN OF WIRE CABLES ENTERING SPLICE WITH 3M SCOTCHMASTIC ELECTRICAL COATING AND ALLOW TO DRY

ANODE LEAD WIRES ARE TO BE SPLICED ON ONE (1) SIDE OF THE HEADER CABLE LOOP ONLY

ANODE TO HEADER CABLE SPLICE

NOTES:

1. IDENTIFY TEST STATION NUMBERS IN ACCORDANCE WITH THESE DESIGN DRAWINGS.
2. ALL BURIED STEEL SHALL BE TAPE COATED IN ACCORDANCE WITH PROJECT SPECIFICATION AND TESTED PRIOR TO BACKFILL.
3. ANODE LOCATIONS ARE GENERAL AND MAY BE RELOCATED TO SUIT FIELD CONDITIONS UPON APPROVAL OF THE ENGINEER.
4. NOTE THAT LOCATIONS OF OTHER UNDERGROUND UTILITIES ARE NOT DEPICTED ON THIS DRAWING. CONTRACTOR IS RESPONSIBLE FOR LOCATING THESE UTILITIES PRIOR TO COMMENCING WORK.
5. PROVIDE 1-IN BY 2-IN ACRYLIC LABEL ENGRAVED WITH LABELS ACCORDING TO THE TEST STATION NUMBERS ON DESIGN DRAWINGS WITH 1/4-IN WHITE LETTERS ON A BLACK BACKGROUND THAT SHALL BE ZIP TIED TO THE TWO RED PIPE WIRES.
6. TEST STATIONS TO BE INSTALLED IN SIDEWALK, 1-FT FROM CURBLINE. IF INSTALLED IN UNPAVED AREA, SET TEST STATION BOX IN 36-IN X 36-IN X 7-IN CONCRETE PAD, AS PER NYC STANDARD SPEC. FINAL LOCATIONS TO BE SHOWN ON AS-BUILT PLANS.
7. TEST STATIONS TO BE PROVIDED BY CONTRACTOR.
8. FINAL LOCATIONS OF ALL ANODES, CADWELDS, REFERENCE ELECTRODES, AND COUNTER ELECTRODES TO BE SHOWN ON AS-BUILT PLANS.
9. ROUTE ALL WIRING FOR EACH TEST STATION IN A 3" SCHEDULE 40 PVC CONDUIT, FROM STEEL WATER MAIN TO TEST BOX.
10. GIVEN FIELD CONDITIONS, ANODE SPACING MAY BE REDUCED TO NO LESS THAN TWO FEET OR ANODES MAY BE PLACED ON EITHER SIDE OF MAIN.
11. ANODES TO BE BACKFILLED IN CLEAN, NATIVE SOIL; FREE OF DEBRIS, ROCKS, AND FLOW FILL.

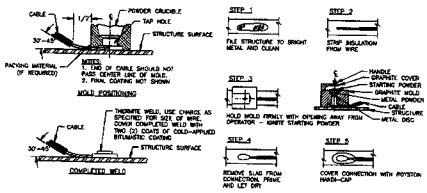

THERMITE WELD

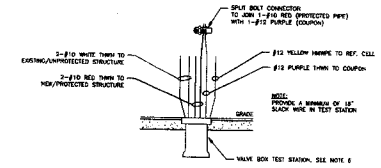

INSULATING FLANGE TEST STATION WIRING

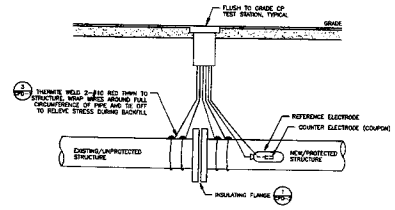

INSULATING FLANGE TEST STATION

NO.	DATE	DESCRIPTIONS	BY	APPR'D
02	11/28/16	REMOVED DESIGN FOR EXISTING PIPES	FR	SP
01	8/18/16	NEW 24" PIPE ADDITION	FR	SP

REVISIONS

CORRTECH
25 SOUTH STREET
HOPKINTON, MA 01748
(508) 435-8850
www.corrtech-inc.com

DESIGNED: SCOTT PAGE
DRAWN: PATRICK BLAIN
CHECKED: TED KIRKPA

ENGINEER-IN-CHARGE

DIRECTOR

CLIENT:
DEPARTMENT OF DESIGN & CONSTRUCTION
DIVISION OF INFRASTRUCTURE
BUREAU OF DESIGN

REPLACEMENT OF TRUNK WATER MAIN IN FLATBUSH AVENUE
BOROUGH OF BROOKLYN

CATHODIC PROTECTION SYSTEM

DATE:	DRAWING NUMBER:	SHEET NUMBER:	REV.
7/29/16	BED-795-CPD-1	9 OF 12	02

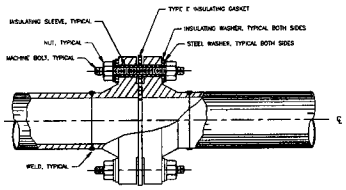

FOR DIRECT BURY ISOLATION FLANGE THE FOLLOWING PROCEDURE APPLY:

THIS PROCEDURE APPLIES TO ALL BURIED INSULATING FLANGES

PROVIDE PROTECTIVE COVERING OF INSULATED FLANGE COMPONENTS AS FOLLOWS:

THE FLANGE AND GASKET AREA OF THE INSULATING FLANGES SHALL BE FIRST TAPED AROUND THE OUTER FLANGE EDGE WITH GRAY COLD APPLIED PEEL AND STICK TAPE

ONCE IN PLACE OVER THE GAP OF FLANGE INTERFACE, PUNCH INSERT/EXIT HOLES IN THE FLANGE TAPE AT APPROXIMATELY 1" TO 2" INTERVALS

TRIM THE CARTRIDGE TIP FOR DESIRED BEAD

INSERT THE CARTRIDGE TIP THROUGH THE HOLE AND PUMP CAULK UNTIL COATING FLOWS OVER BOLTS/SLEEVES ON BOTH SIDES

REPEAT PROCEDURE UNTIL THE SPACE BETWEEN THE FLANGES IS FILLED COMPLETELY WITH NO VOIDS

REMOVE FLANGE TAPE AND SMOOTH OUT CAULK MATERIAL.

COVER THE FLANGE EDGES WITH COLD APPLIED PEEL AND STICK TAPE TO SEAL FLANGE/GASKET MATERIAL DO NOT WRAP THE BOLTED AREA OF THE INSULATING FLANGE

FILL SNAP ON BOLT COVER WITH CAULK AND SNAP ON TO EACH BOLT AND NUT ASSEMBLY

INSTALL INSULATING FLANGE TEST STATION COMPONENTS AND TERMINATE IN TEST STATION

INSULATING FLANGE

1 / CPD-2

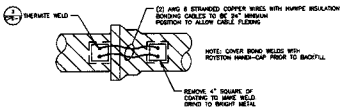

BONDING OF MECHANICAL JOINT

2 / CPD-2

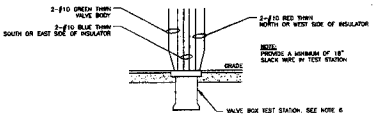

BUTTERFLY VALVE
TEST STATION WIRING

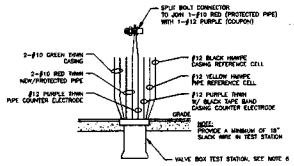

CASING ISOLATION
TEST STATION WIRING

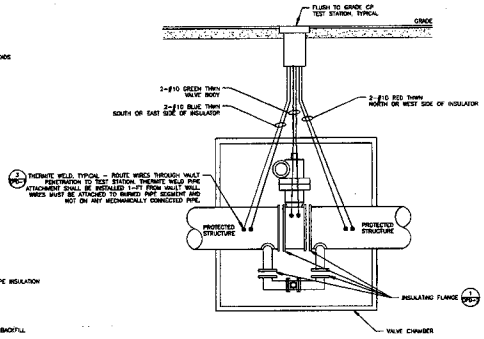

BUTTERFLY VALVE

3 / CPD-2

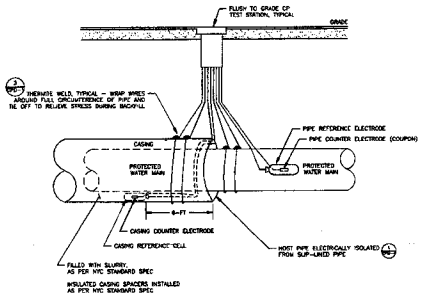

CASING ISOLATION

4 / CPD-2

NO.	DATE	DESCRIPTIONS REVISIONS	BY	APPR'D
02	11/20/14	REMOVED DESIGN FOR EXISTING PIPES	PS	BF
01	10/10/14	NEW 72" PIPE LENGTHS	PS	BF

CORR TECH
28 SOUTH STREET
HOPKINTON, MA 01748
(508) 435-0050
www.corrtech-inc.com

DESIGNED SCOTT PAUL
DRAWN PATRICK BURN
CHECKED TED MEGRA

CHIEF ENGINEER
DIRECTOR

CLIENT:
DEPARTMENT OF DESIGN & CONSTRUCTION
DIVISION OF INFRASTRUCTURE
BUREAU OF DESIGN

REPLACEMENT OF TRUNK WATER MAIN IN FLATBUSH AVENUE
BOROUGH OF BROOKLYN

CATHODIC PROTECTION SYSTEM

DATE:	DRAWING NUMBER:	SHEET NUMBER:	REV.
7/29/10	BED-798-CPD-12	10 OF 12	02

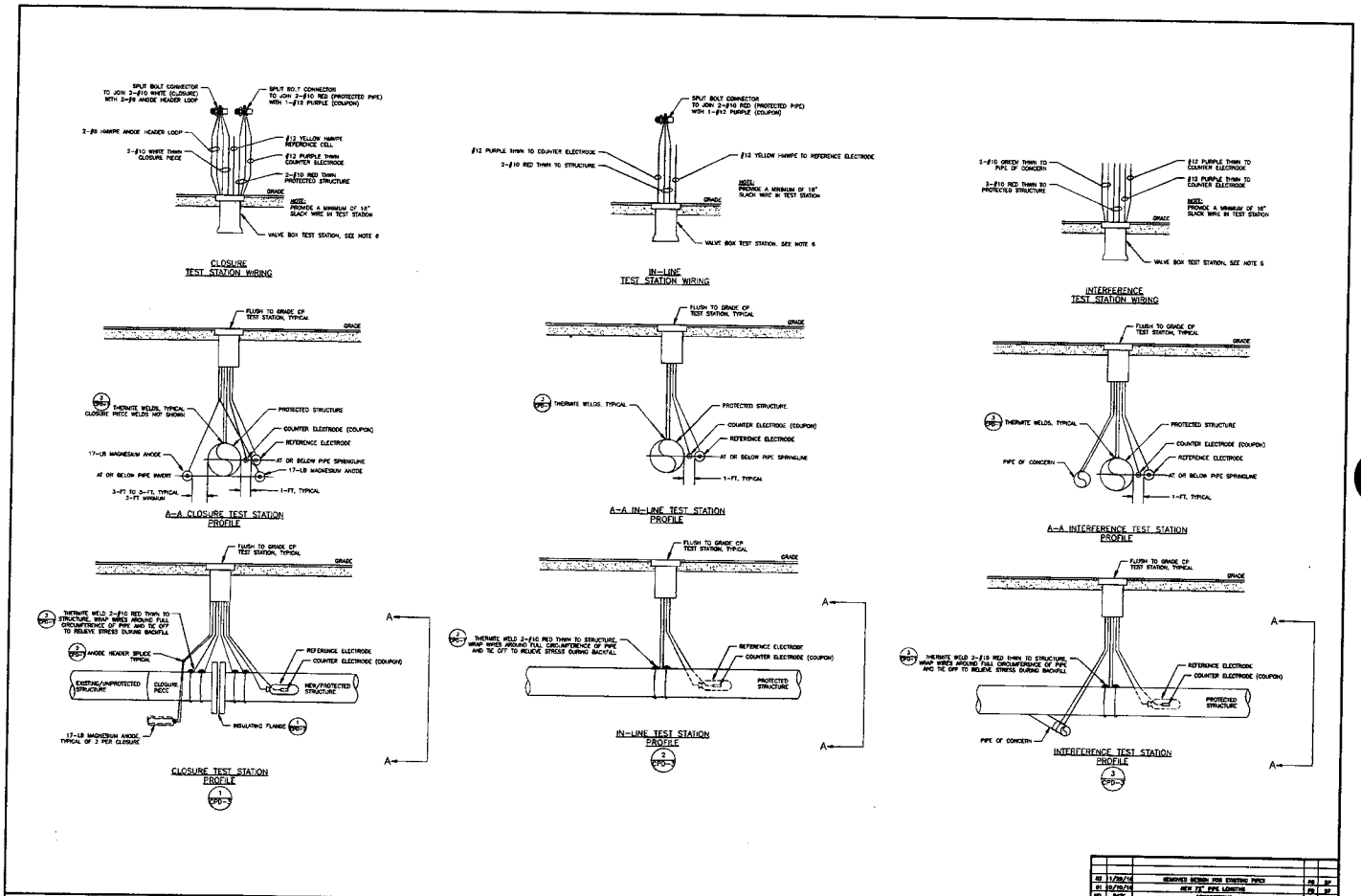

NO.	DATE	DESCRIPTIONS	BY	CK
02	11/20/14	REMOVED NOTES FOR EXISTING PIPES	FB	SF
01	10/20/14	NEW 72" PIPE LENGTHS	FB	SF
NO.	DATE	DESCRIPTIONS	BY	APP'D

REVISIONS

CORRTECH
25 SOUTH STREET
HOPKINTON, MA 01748
(508) 435-0080
www.corrtech-inc.com

DESIGNED: SCOTT PAUL
DRAWN: PATRICK BLAIN
CHECKED: TED WIMMA

ENGINEER-IN-CHARGE

DIRECTOR

CLIENT:
DEPARTMENT OF DESIGN & CONSTRUCTION
DIVISION OF INFRASTRUCTURE
BUREAU OF DESIGN

REPLACEMENT OF TRUNK WATER MAIN IN FLATBUSH AVENUE
BOROUGH OF BROOKLYN

CATHODIC PROTECTION SYSTEM

DATE:	DRAWING NUMBER:	SHEET NUMBER:	REV.
7/29/13	BED-798-CPD-3	11 OF 12	02

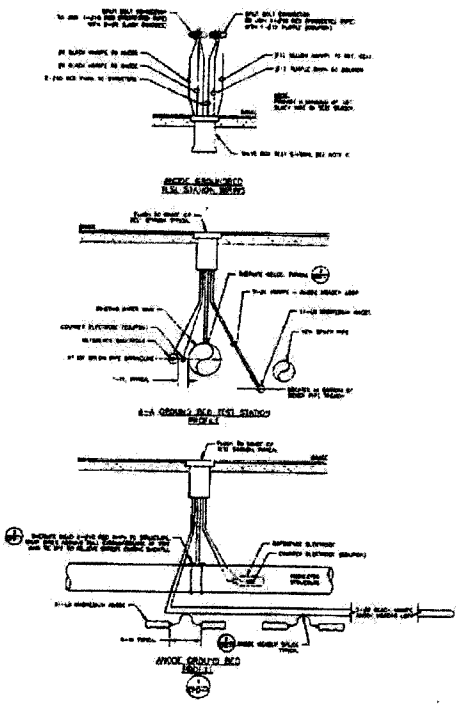

PROJECT SPECIFIC SPECIFICATIONS

The Pipe Installation Contractor shall utilize and follow the cathodic protection design and specification that have been developed for this piping network and indicated in the design package generated by the NY DDC.

The contractor shall work with a cathodic protection materials supplier who has been providing technical support in the NYC Boroughs for a minimum of 10-years to assist in system material requirements and procurement. The material supplier shall provide on-site manufacturer representation to the Contractor during the construction project.

The Contractor shall provide new materials and equipment unless otherwise specifically indicated and specified. New materials and equipment to be provided shall be essentially the standard catalogued products of a manufacturer regularly engaged in the manufacture of such products. Materials and equipment shall meet the applicable requirements of the Specification. All materials and equipment shall have evidence of UL approval when UL Standards exist.

The Contractor shall use magnesium anodes, installed along the water main as shown on the approved design drawings. The system shall include associated test stations, insulating joints and all wiring and connections.

All sections of the water main installed under this contract shall be isolated from the remainder of the distribution system at the contract limits by insulating flange joints or insulating couplings. The water main being installed shall be divided into isolated sections by insulating joints. Insulating joints shall be installed at butterfly valves, closure pieces, blow-offs and air cock connections.

The new water main shall be isolated from sleeves, manhole, reinforcing rods, casings and all other structures by physical means, or by the use of high strength dielectric materials. Test stations shall be placed at pipeline crossings, as required or approved by the Engineer.

Under NO circumstances shall the water main be shorted to a casing or steel reinforcing or other buried metallic structures not part of the cathodic protection system.

At locations where casings are required, the pipeline shall be isolated from the casing by installing approved insulating devices such as non-metallic spacers.

Eighteen inches of shock shall be left on each wire in each test station. In the event a wire is less than eighteen inches it shall be extended with a wire of the same color and same gage or lower gage with an insulated electrical connector approved by the Engineer.

Test station wiring shall be placed in PVC conduit at all roadway crossings.

TESTING:

To ensure that the cathodic protection system is functioning properly, and that the criteria for protection as stated in NACE Recommended Practice SP0100 (latest revision) are met, field tests shall be performed by the NYC DDC NACE Corrosion Specialist in concert with and in support of the RFI team. DEP-BWSO-CPQA shall be informed about the testing and, at its option, may visit the interim testing, however the responsible party for the contract i.e. DDC or DEP shall witness all final testing.

During installation, testing shall be performed on each anode groundbed and isolated pipe section or group of sections of completed pipe over 2000 feet in length. An interim report for each section shall be submitted to the RFI Team.

The complete cathodic protection system shall be tested prior to final restoration, and pipe-to-soil potential testing shall be repeated following final restoration.

The cathodic protection system shall not be considered complete until a Final Report and As-Built-Drawings have been prepared and submitted by the NYC DDC NACE Corrosion Specialist and accepted by DEP-BWSO-CPQA. The report shall be organized in an orderly chronological order.

CLIENT DEPARTMENT OF DESIGN & CONSTRUCTION DIVISION OF INFRASTRUCTURE BUREAU OF DESIGN	REPLACEMENT OF TRUNK WATER MAIN IN FLATBUSH AVENUE	CATHODIC PROTECTION SYSTEM	

Park Slope Historic District Extension II | LP-2558

NYC Landmarks Preservation Commission

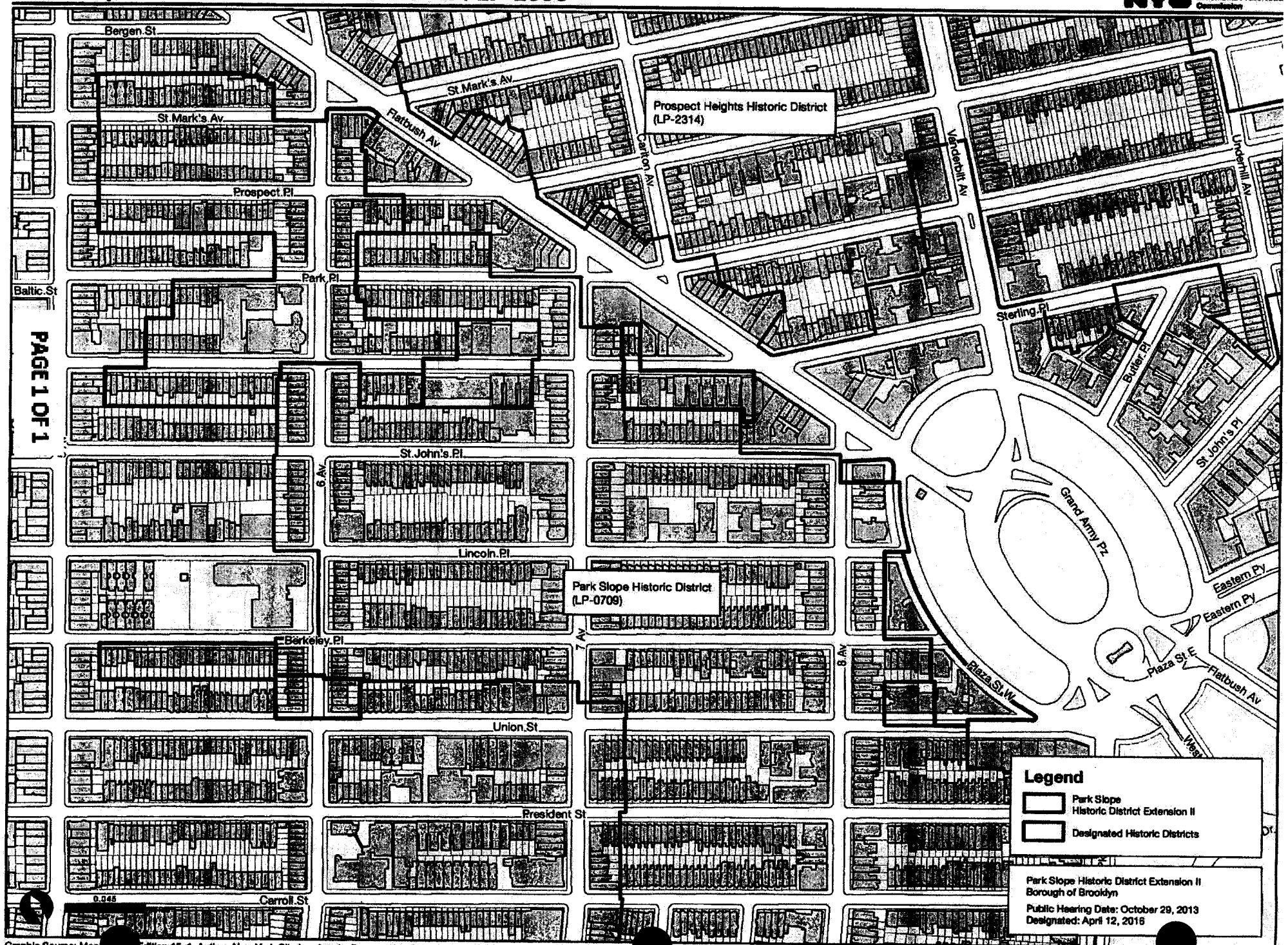

Graphic Source: Map Edition 15v1, Author: New York City Landmarks Preservation Commission, DHW, Date: 4.12.2016

PAGE 1 OF 1

EP7 - PAGES

GAS COST SHARING (EP-7) STANDARD SPECIFICATIONS

NOTICE

THE PAGES CONTAINED IN THIS SECTION (EP7-PAGES) REPRESENT THE GAS COST SHARING WORK THAT SHALL APPLY TO AND BECOME A PART OF THE CONTRACT.

(NO TEXT ON THIS PAGE)

TABLE OF CONTENT

I - NOTICE TO ALL BIDDERS; GAS COST SHARING WORK

II - GENERAL PROVISIONS; GAS COST SHARING WORK

1. General
2. Gas Interferences And Accommodations
   2a. Water Main Accommodations
   2b. Sewer Accommodations
3. Quantity Overruns, EP-7 Funded Bid Items
4. Changes And Extra Work
5. Excavation
6. Backfilling And Street Restoration
7. Non-Responsive Bids
8. Minimum Clearances
9. Work By Facility Operator
10. Materials Furnished By Facility Operator
11. Liability And Insurance
12. Width And Depth Of Excavation
13. Depth And Crossing Angles Of Gas Facilities
14. Maintenance Of Traffic For Gas Work
15. Relocated Gas And Temporary Systems Installation
16. Role Of Company Inspector
17. Coordination With Gas Company

III - TECHNICAL SECTION

SECTION 6.01 - Trench Crossings; Support And Protection Of Gas Facilities And Services.
SECTION 6.02 - Extra Excavation For The Installation Of Catch Basin Sewer Drain Pipes With Gas Interferences.
SECTION 6.02.1 - Extra Excavation For The Installation Of Catch Basin Sewer Drain Pipes With Upstream Inverts Greater Than Six (6) Feet.
SECTION 6.03 - Removal Of Abandoned Gas Facilities. All Sizes.
SECTION 6.03.1 - Removal Of Abandoned Gas Facilities With Possible Coal Tar Wrap. All Sizes. (For National Grid Work Only)
SECTION 6.03.1a - Removal Of Abandoned Gas Facilities With Possible Coal Tar Wrap. All Sizes. (For Con Edison Work Only)
SECTION 6.04 - Adjust Hardware To Grade Using Spacer Rings/Adaptors. (Street Repaving.)
SECTION 6.05 - Adjust Hardware To Grade By Resetting. (Road Reconstruction.)
SECTION 6.06 - Special Care Excavation And Backfilling.
SECTION 6.07 - Test Pits For Gas Facilities.
SECTION 6.09 - Trench Excavation and Backfill for New Gas Mains and Services (For National Grid Work Only)
SECTION 6.09a - Trench Excavation and Backfill for New Gas Mains and Services (For Con Edison Work Only)

IV - STANDARD SKETCHES; GAS COST SHARING WORK

NO. 1 - Support Requirements For Gas Mains And Services Crossing Excavation Greater Than 4'-0" Wide At Any Angle
NO. 1A - Support Requirements For Gas Mains Over 16" Diameter Up To And Including 48" Diameter Crossing Excavation At Any Angle
NO. 2 - Typical Methods Of Measurement For Gas Crossings
NO. 3 - Utility Crossings During Catch Basin Chute Connection Pipe Installation
NO. 4 - Utility Crossings During Catch Basin Chute Connection Pipe Installation (Extra Depth)
NO. 5 - Gas Main Encroachment On And/Or Parallel To Excavation Of Unsheeted Trench

V - PRELIMINARY GAS WORK TO BE PERFORMED BY FACILITY OPERATOR

VI - LISTING OF APPROXIMATE LOCATIONS OF EP-7 BID ITEMS QUANTITIES

I - NOTICE TO ALL BIDDERS; GAS COST SHARING WORK

All prospective bidders are hereby advised that, pursuant to the "Gas Facility Cost Allocation Act", ("the Act"), the City of New York has entered into an agreement ("the Agreement") with the gas companies (Con Edison or National Grid (formerly KeySpan Energy Delivery)) operating in their respective areas of the City to "share" the cost of facility relocation and/or support and protection of facilities disturbed by proposed water and/or sewer and related City work specified in this contract. Therefore, bid items, specifications and estimated quantities for the incremental costs of support and protection of certain gas facilities have been included in this contract. The low bid for this contract shall be determined by examining each bid for all work to be performed under this contract including any work of support and protection of gas facilities to be performed. The Contractor shall not seek additional compensation from gas companies except as specifically set forth in its contract.

II - GENERAL PROVISIONS; GAS COST SHARING WORK

1. General:

The Contractor shall perform City work with interferences from existing live and abandoned gas facilities. This shall be defined as utility work. Therefore, this contract includes bid items, specifications and estimated quantities designed to fully compensate him/her for the incremental costs of supporting, protecting, providing accommodations and, avoiding disturbing gas facilities located in the streets shown on the contract drawings. In the event that any other provisions of this contract related to gas facilities (or private utilities) conflict with these provisions, these provisions shall supersede and govern all work related to gas facilities owned by the companies operating in the project area. All utility work, as defined in these specifications, including changes and additions thereto shall be paid solely by the City except when specified otherwise in this contract. Contractor hereby agrees that the facility operator shall not be liable to pay him/her for any work performed including extra utility work. Contractor agrees that its bid prices include all compensation for loss of productivity and efficiency, idle time, delays (including any delays occasioned by negotiation of a contract change), change in operations, mobilization, demobilization, remobilization, added cost or expense, lost of profit, other damages or impact costs that may be suffered by or because of utility work, or the presence of gas facilities in the proximity of City work and that it will not seek additional compensation for these items. All disputes shall be resolved as specified in the contract.

Pursuant to the Act, Agreement, and the New York City Administrative Code, the gas company(ies) has been directed by the Commissioner and is required to perform all maintenance, repairs, replacement, shifting, alteration, relocation, and/or removal work that are not part of this contract. By having bid on this contract, the Contractor understands and agrees that the Commissioner has preasserted any right the City has to require, including the issuance of any directives or so called "order outs" under the New York City Administrative Code, any or all gas companies to maintain, repair, replace, protect, support, shift, alter, relocate, and/or remove all gas facilities that are about to be disturbed by the City contract work. The issuance of additional such directives during the performance of the contract work, where necessary in the sole judgment of the Commissioner, shall be initiated by such Commissioner as set forth in the relevant sections of the Act and Agreement. Contractor further agrees to insert such requirements as set forth herein above into any contracts with its approved subcontractors so that its subcontractors also understand and agree to such contract requirements.

2. Gas Interferences And Accommodations:

During the performance of sewer and water main work funded by the New York City Department of Environmental Protection (NYCDEP), as instructed by the Engineer, the use of any applicable contract bid item is allowed in order to resolve and accommodate all gas facilities interferences with such City work, including the removal of contaminated soil in associated trench excavation. This is in addition to the specified EP-7 bid items in the contract. Payment for such accommodation shall be funded by EP-7 bid item "UTL-GCS-2WS - GAS INTERFERENCES AND ACCOMMODATIONS" (F.S. Fixed Sum). The value of such accommodation shall be computed by multiplying the appropriate unit prices bid to the quantity of work performed, as determined by the Engineer, and applying the total amount thus to be paid

to EP-7 bid item "UTL-GCS-2WS - GAS INTERFERENCES AND ACCOMMODATIONS". When EP-7 bid item "UTL-GCS-2WS - GAS INTERFERENCES AND ACCOMMODATIONS" does not exist, such additional accommodation work shall be at no cost to the City but shall be a matter of adjustment between gas facility operator and Contractor. Private facilities, other than gas, that become in interference due to gas interferences accommodations shall also be accommodated, if so directed by the Resident Engineer, at no additional cost to the City and, provided that its owner agrees to be responsible for all additional costs to Contractor, otherwise, such facility shall be ordered by the City to be maintained, shifted, relocated or replaced by its owner at his/her expenses.

2a. Water Main Accommodations:

When water main construction is to be performed in this contract, Contractor shall be required, if warranted by field conditions, and at locations designated by the Resident or Borough Engineer, to change the vertical or horizontal alignment of water mains including but not limited to all additional labor, material, work method accommodations, furnishing, delivering and laying offset fittings and pipes, etc., necessary in order to complete water main installation and, avoid gas interferences in the project area, including street intersections. Typical work method accommodations shall include, but not be limited to, pier and plate, installation of filter fabric and select fill, etc. Such work shall be performed as directed by the Engineer and in accordance with contract specifications and latest edition of water mains standards and specifications.

2b.Sewer Accommodations:

When sewer construction is to be performed in this contract, Contractor shall be required, if warranted by field conditions, and at locations designated by the Resident or Borough Engineer, to change the horizontal alignment of sewer facilities (if possible) including but not limited to all additional labor, material, work method accommodations, furnishing, delivering and construction of additional manholes or modification of manholes/catch basins, extending chute connections, house connections, using alternate materials and methods, poured-in-place structures, etc., necessary in order to complete sewer installation and, avoid gas interferences in the project area, including street intersections. The term sewer facility shall include, but not be limited to, all sewer pipe and appurtenances, manholes, catch basins, catch basin chutes, etc. Such work shall be performed as directed by the Engineer and in accordance with contract specifications and latest edition of sewer standards and specifications.

3. Quantity Overruns, EP-7 Funded Bid Items:

No quantity overrun, in excess of one hundred twenty five (125) percent, shall be permitted for EP-7 funded bid items (gas) included in this contract, except when Resident Engineer determines that such overruns are caused by field modifications to planned City work, or approved construction methods, or contract scope changes. Overruns not paid by City shall be negotiated and paid to Contractor by gas facility operator who then shall be entitled to reimbursement by NYCDEP under established cost sharing procedures.

4. Changes And Extra Work:

This section is not applicable to work defined under "Emergency Reconstruction Contracts" or so-called "Where and When Contracts" since these projects, by definition, inherently encounter unanticipated gas facilities and cannot be pre-engineered. In all other cases, any contract changes proposed for City work shall also cover and include all associated changes to support and protection of gas facilities affected by such changes to City work. In all other cases where the Contractor finds that City work cannot be performed as planned and specified and/or, as approved because of a need to support, protect and/or alleviate interferences from gas facilities that were not listed and/or shown, or incorrectly shown in contract plans and specifications, he shall immediately notify the Resident Engineer and the facility operators' representative of his findings. Resident Engineer shall promptly examine such claims and determine whether or not such work is covered by contract bid items and /or specifications (contract bid items and specifications shall include city contract items as well as EP-7 items). The Resident Engineer shall also

examine the claim to determine if the application of EP-7 bid item "UTL-GCS-2WS - GAS INTERFERENCES AND ACCOMMODATIONS" is appropriate to resolve the claim. If upon examination, the Engineer determines that such field conditions were unanticipated (not shown and/or listed, or incorrectly shown in contract documents) and are not covered by bid items and contract specifications, he shall then direct the Contractor and the affected facility operator to negotiate the cost of supporting and protecting, and/or alleviating the impact on City work caused by such unanticipated gas facilities with each other with the understanding that the performance of City work shall continue during negotiations. If a cost agreement is reached, the Contractor and facility operator shall adjust such costs between themselves at no additional costs to the City contract. If the Contractor and affected facility operator do not reach an agreement concerning the price to be paid for the extra work within five (5) business days of the Engineer's directive to engage into such negotiations and, after considering: public safety and inconvenience, requirements of laws and regulations applicable to private utilities, integrity of all utility systems, including but not limited to sewer and water, gas, electric, telephone and, cable TV facilities, sound engineering practices, cost (long and short term) to all affected parties, and potential City work delays, then the Resident Engineer, depending on nature and severity of interferences with City work, shall either, direct the facility operator to relocate or replace its facilities at its own discretion and cost, reimbursable by NYCDEP under established gas cost sharing procedures or, direct the Contractor to perform the utility work on actual time, material and equipment costs basis pursuant to relevant contract requirements and amendments. Contract bid prices for any applicable items of work involved shall be applied, or converted to an allowance for time and material charges. Changes shall be for affected portions of utility work and, shall be processed with EP-7 funds.

5. Excavation:

All excavators shall notify the NYC/LI One Call Center at 1-800-272-4480 at least two (2) working days, not including the day of the call, but not more than ten (10) working days in advance of the start of any excavation work. The gas company(ies) will mark out its facilities within the project limits and provide Construction Inspector(s) during all excavation work in close proximity (within twelve (12) inches) to gas facilities. The Contractor shall exercise extreme caution when excavating in the vicinity of any gas facilities. Hand excavation shall be performed within twelve (12) inches of gas facilities. The Contractor prior to excavating underneath these facilities shall adequately support all gas facilities. Standard support details for gas facilities have been included in the specifications. Any damage to gas facilities shall be reported immediately to the gas company(ies). The Contractor shall be responsible for all cost associated with repairs made necessary by damages caused by his operations.

6. Backfilling And Street Restoration:

Backfilling operations and street restorations shall be in accordance with contract requirements.

7. Non-Responsive Bids:

Every gas (EP-7) bid item has a suggested "Not less than" value per unit indicated on contract bid sheet. Bids resulting in cost of less than suggested for EP-7 items are hereby prohibited and if submitted shall be considered NON-RESPONSIVE.

8. Minimum Clearances:

Clearance requirements for City work shall govern and supersede any clearance requirement of gas facility operator. Therefore, a minimum of twelve (12) inches clearance between private utilities and City water mains, sewers or related structures to be installed in this contract shall be maintained. When this clearance is not attainable, the Resident Engineer may allow a minimum of four (4) inches clearance. With less than twelve (12) inches clearance a neoprene/polyethylene shield (to be provided by facility operator) shall be installed as part of all work item specifications. However, if Resident Engineer determines that City work cannot be performed within allowable clearance and no reasonable City accommodation (no-cost change to City work) is possible, the City shall direct the facility operator to remove, relocate, shift, or alter their facility(ies) pursuant to the New York City Administrative Code.

9. Work By Facility Operator:

The facility operator may find it necessary to perform the following types of work during performance of City work: accommodating a contractor's request for gas facilities modifications (in order to facilitate City contractor's proposed construction method) or, remedial and emergency work on gas facilities proper with their own resources and materials if an approved method of construction for City work causes unanticipated disturbances to gas facilities or, replacing defective gas facilities when they are exposed by the Contractor and their actual conditions are observable by the facility operator. Also included in the above category of defective gas facilities are: the presence of environmental contaminants attributable to the gas facility in or around gas facilities. If such work is deemed required by the facility operator or if facility operator is directed by the City to address such deficiencies at any time during the course of construction, the Contractor shall modify the construction schedule at no cost to the City and allow the facility operator five (5) business days to perform such work without interferences. Additional costs to the facility operator (in cases of accommodations) or, Contractor (in cases of defective gas facilities) due to such gas work, if any, shall be the responsibility of the parties involved and not of the City. Such costs shall be a matter of adjustment between the Contractor and the facility operator.

10. Materials Furnished By Facility Operator:

It shall be the Contractor's responsibility to inspect material to be installed by him immediately upon delivery and advise the facility operator through its authorized representative, of all damaged materials. The Contractor at no additional costs to the City or the facility operator shall replace any material that is damaged or lost after the Contractor's inspection.

11. Liability And Insurance:

Notwithstanding the provisions of this contract, the existing division of liabilities to third parties shall remain the same as between the City and the company. Therefore, it is specifically agreed by the City, company and Contractor (by bidding on this contract) that for the purpose of any liabilities to third parties, that the City contractor performing work directly and physically relating to gas company facilities in this project, shall be deemed an agent of the company and not an agent of the City, the New York City Municipal Water Finance Authority, or the New York City Water Board. Contractor shall include the company as an additional insured on all insurance policies maintained to comply with the City's insurance requirements.

12. Width And Depth Of Excavation:

Contractor shall not be authorized to deliberately change trench or excavation widths and/or depth specified without Engineer's approval. Enlargement of any side of excavation up to eighteen (18) inches beyond pay limits (or inside face of sheeting) requested by the Contractor for the installation of certain types of sheeting may be granted. However, such enlargements or those greater than allowable shall not be approved when, in the sole judgment of the City, field conditions allow the water mains and sewer work to be performed within the limits specified and, the sole purpose of such enlargement request is to impact adjacent utilities (public or private) whose support and protection are part of this contract. Any approval shall be given at no additional cost to the City contract, including EP-7 funding, and all costs associated with unauthorized enlargements shall be the sole responsibility of the Contractor.

13. Depth And Crossing Angles Of Gas Facilities:

Where gas facilities are shown (or specified as) crossing proposed alignment of sewers, water mains, catch basins and chute connections or any other proposed excavations at specific angles (as measured off plans or sketches or specified in contract), it shall be understood that actual field measurements may deviate (plus or minus) forty-five (45) degrees from those shown or specified. The cover, or depth from street surface to top of facilities, shall be as shown or specified in contract documents, no deviation is to be assumed. Where gas facilities are not shown on contract documents, but their support and protection are otherwise included in this contract then, all references to facilities crossing at "various angles and depth" in the gas sections shall mean that such facilities are crossing sewer, water, catch basin and, catch basin chute, and other excavations at a ninety (90) degree angle to the proposed sheeting line or side of

excavation (for unsheeted trenches) with an allowable deviation of forty-five (45) degrees in any direction, except for catch basin chute excavation where the allowable deviation shall be sixty (60) degrees. Where the cover is not noted or specified, the bottom face of such facilities shall be assumed to be crossing catch basin chutes at a depth of three (3) foot eight (8) inches or less from the street surface. Paragraph No. 2 above shall apply in cases of distribution water main construction. Appropriate bid items and specifications are provided for cases where angle and depth are greater than stated above. This section also applies to work defined in "Emergency Reconstruction Contracts" or so-called "Where and When Contracts". These contracts are not pre-engineered and consequently have no drawings, sketches or determined locations and so, gas facilities encountered will be crossing existing and proposed sewer, water, catch basin/catch basin chutes and all appurtenances at various angles and depths.

14. Maintenance Of Traffic For Gas Work:

All work pertaining to gas bid items and specifications shall be performed within the contract maintenance of traffic plan as specified in the contract document. The bid price for the Maintenance and Protection of Traffic shall cover all work pertaining to gas items. The City shall make compensation for additional maintenance and protection of traffic items in connection with gas item of work only when such additional work is deemed reasonable and necessary by the Resident Engineer and is approved by him prior to its performance.

15. Relocated Gas And Temporary Systems Installation:

In cases where the Contractor is allowed to select the location for temporary construction such as, installation of dewatering headers, wells, well points, etc., he shall not disturb any gas facilities shown on sketches provided in this section. The only exception shall be, if the affected gas company agrees to such relocation and provided that the cost of such relocation is a matter of adjustment between the company and Contractor, and at no cost to the City.

16. Role Of Company Inspector:

In any case in which the City elects to perform some or all support and protection work with its own employees, personnel or contractors, the facility operator shall provide onsite inspectors to approve and certify such support and protection work (exclusive of City accommodations) performed by the City's own employees, personnel, and contractors. Facility operator's inspectors are not authorized to direct City contractor during the performance of contract work. They shall act through the City Resident Engineer and provide him/her required approvals and certifications, prior to preparing partial payments of EP-7 items, in a format and frequency to be prescribed by the appropriate City Head of Construction.

17. Coordination With Gas Company:

The Contractor shall be required to notify the gas company(ies), in writing, at least two (2) weeks prior to the start of final paving in order to allow companies to complete any unfinished gas work located within the area to be paved. Every effort shall be made to maintain gas service with minimum inconvenience to the public.

III - TECHNICAL SECTION

SECTION 6.01 - Trench Crossings; Support And Protection Of Gas Facilities And Services.

1. Description:

Under this section, the Contractor shall provide all labor, materials, equipment, and incidentals required to

support and/or protect the integrity of gas mains, services and appurtenances of any sizes, configurations, and operating pressures crossing trench excavations above subgrade for planned construction of sewers and water mains facilities. A gas service shall be defined as a gas pipe of three (3) inches in diameter or less branching from the main to a customer pick up point or property valve box. A gas main may be any size pipe that is part of a distribution or transmission network other than services described above. Crossings shall be defined as gas facilities spanning the width of excavation (one side to the other side). These crossings may be at various angles and depth as shown on "Gas Cost Sharing Work Standard Sketches Nos. 1 and 1A", and as specified in "General Provisions; Gas Cost Sharing Work Paragraph No. 13" and, at the locations shown or listed in contract documents. The gas company operating in the area, (facility operator), owns these facilities. The work shall be performed in accordance with contract specifications, plans, and at the directions of the Resident Engineer in consultation with the authorized representatives of the facility operator.

2. Method Of Construction:

A. Protection: In general, the gas facilities shall be protected as required by New York State Industrial Code 753. In particular, the Contractor shall use hand excavation methods (pick and shovel or hand held power tools) directly below the pavement base to expose the gas facilities (marked out by facility operators) and to ascertain the clearances and cover of the facilities with respect to the proposed excavation. Upon exposing the affected facilities sufficiently, at the discretion of the Resident Engineer, to ascertain the foregoing, Contractor shall be permitted to proceed with a combination of hand and machine excavation, as appropriate, outside a zone of protection whose limit shall be defined as a perimeter located twelve (12) inches from the outside face of each gas facility crossings (See "Gas Cost Sharing Work Standard Sketch No. 2"). If the facilities are in direct interference with City work, meaning that "Minimum Clearances" described in "General Provisions; Gas Cost Sharing Work Paragraph No. 8" cannot be maintained, and excavation has to be temporarily or permanently abandoned then this particular location shall become a test pit and dealt with as specified in Section 6.07, and "General Provisions; Gas Cost Sharing Work Paragraphs Nos. 2 and 8".

B. Support: Gas mains or services crossing excavations equal or less than four (4) feet wide are generally self supporting, unless field conditions as determined by the Resident Engineer require otherwise. The support requirements for gas mains and services crossing excavations greater than four (4) feet wide shall be as shown on the attached "Gas Cost Sharing Work Standard Sketch No. 1" and Contractor shall use sheeting methods that permit the maintenance of gas facilities in their existing locations and configurations. Alternate methods equivalent to those shown on the sketch or accommodations by the facility operator proposed by the Contractor in order to facilitate the execution of the specified work shall be allowable, provided that prior approval is obtained by the Contractor from the Engineer and the facility operator. The support and protection of gas facilities crossings shown on plans, drawings, listings or otherwise identified in this contract shall not be circumvented with the issuance of so called "order outs".

3. Method Of Measurement:

The Contractor shall be paid for supporting and/or protecting gas facilities crossing trench excavations under the appropriate bid items covered by this section. The Contractor shall be directly responsible to the facility operator for the total cost of using any alternate method requiring the use of resources owned by the facility operator. Regardless of the method used, the City shall pay the bid price for the appropriate support and/or protect item of work. The average rate charged by the facility operator for alternate support and protection work such as, disconnecting and reconnecting gas services is listed in attached "Schedule GCS-A".

4. Payment Restrictions:

These items shall not be paid for: gas services crossing unsheeted water main trench excavation; abandoned gas main/services identified by facility operator; gas mains/services crossing trench excavations for fire hydrant branch connections pipes, catch basins and/or chutes (sewer drain pipe), house sewer and/or water services; gas facilities encroaching any face of excavation for sewer and/or

water construction, all of which are covered under other contract sections. Also this item shall not be paid for new gas mains and services crossing water trenches when trenching for such new facilities has been performed by the Contractor in common with trench excavation for City work (overlapping trench limits). The cost of supporting and protecting such gas facilities crossings shall be deemed included in the cost of trench excavation for the new gas facilities. This payment restriction shall apply even if such common trench gas excavation is not part of the contract. The prices bid for items covered by this section represent full compensation to Contractor to completely perform the work described. No other bid items shall be combined with these items in order to pay for gas main and/or services crossing excavations specified herein.

5. Method Of Payment:

Each (Ea.) gas facility crossing trench excavation as described in these specifications shall be counted for payment.

6. Price To Cover:

The cost of timber/steel supports installed for gas facilities shall be included in the bid price. The bid price for each crossing shall also cover all additional supervision, labor, material (except those provided by the facility operator), equipment and insurance necessary to completely maintain the gas facilities without disruption of service to the customers and in accordance with contract plans, specifications and facility operator standards. The price shall also include: changes of method of operations; sheeting modifications where necessary to accommodate the gas facilities crossings; installation and removal of water pipe under gas facilities (so called "snaking"); extra care during excavation (including hand excavation under existing single and multiple gas facilities); extra backfilling and compaction around, over and under gas facilities; installation and removal of sheeting around gas facilities; associated maintenance and protection of traffic; barricades; and traffic plates that may be required to temporarily close and/or complete the work.

SECTION 6.02 - Extra Excavation For The Installation Of Catch Basin Sewer Drain Pipes With Gas Interferences.

1. Description:

Under this item, the Contractor shall provide all labor, materials, equipment, insurance, and incidentals for the extra excavation associated with the installation of catch basin sewer drain pipes (chute) under gas facilities of various sizes crossing the trench excavation at various angles and depth at the locations shown in the contract documents and also, for the support and protection of these facilities during associated excavation and backfill operations. The gas company operating in the area, (facility operator), owns these facilities.

2. Method Of Measurement:

The bid price shall be per location (Each) where extra excavation is required when catch basin sewer drain pipes are installed at an upstream invert depth lower than four (4) feet (up to a maximum of six (6) feet) from the proposed pavement grade because the bottom faces of interfering gas mains and appurtenances are located at a depth greater than three (3) foot eight (8) inches from proposed pavement surface (See "Gas Cost Sharing Work Standard Sketch No. 4").

3. Method Of Construction:

Incremental cost responsibility for chute excavation is determined by the first private facility encountered starting from catch basin structure proper and that prevents the installation of the chute connection at an upstream cover less than or equal to three (3) feet or any other minimum cover required to avoid City facilities (e.g. water, sewer, etc.) as directed by the Resident Engineer.

4. Payment Restrictions:

This item shall not apply and related bid item shall not be paid in cases where:

A. Upstream invert chute is more than six (6) feet deep because of gas facilities.

B. Chute cannot be installed above existing gas facilities because of interferences with other private facilities that are not otherwise covered under this contract, regardless of upstream invert depth.

The above cases shall be at no cost to the City, but shall be a matter of adjustment between the Contractor and the facility operator(s).

5. Price To Cover:

The bid price shall cover the additional cost of all additional supervision, labor, materials, equipment and insurance, to complete the installation of catch basins and associated sewer connections in accordance with the contract plans and specifications. The price shall include: excavation by hand around and under single and multiple gas facilities; locating, supporting and protecting gas facilities; backfilling and all other items necessary to perform all work incidental thereto including: installation and removal of drain pipe under gas facilities ("snaking"); widening of trenches to facilitate the above work; subsequent additional backfill and pavement restoration; modifying precast catch basin window to accommodate connection; changing sheeting method and configuration to accommodate gas facility crossings; maintenance and protection of traffic; barricades; and installation of traffic plates that may be required to temporarily close and/or complete the work. The price shall not include removal of ledge rock and/or excavation of boulders in open cut.

SECTION 6.02.1 - Extra Excavation For The Installation Of Catch Basin Sewer Drain Pipes With Upstream Inverts Greater Than Six (6) Feet.

1. Description:

Under this item, the Contractor shall provide all labor, materials, equipment, insurance and incidentals for the extra excavation of catch basin chutes where the upstream invert is greater than six (6) feet under gas facilities of various sizes crossing the trench excavation at various angles and depth at the locations shown in the contract documents or as determined by field conditions and also, for the support and protection of these facilities during the associated excavation, sheeting and backfilling operations.

2. Method Of Measurement:

The bid price shall be per location (Each) where extra excavation and sheeting is required when the catch basin chute installed at an upstream invert depth lower than six (6) feet from the proposed pavement grade because the bottom faces of the interfering gas mains and appurtenances are located at a greater depth than three foot eight inches from the proposed pavement surface only.

3. Method Of Construction:

Incremental cost responsibility for chute excavation is determined by the first private facility encountered during such excavation when initiated from catch basin structure and that prevents the installation of the chute at an upstream cover less than or equal to three (3) feet or any other cover required to avoid City facilities as directed by the Resident Engineer.

4. Payment Restriction:

This item shall not apply and related bid item shall not be paid in cases where:
Upstream invert chute is less than or equal to six (6) feet deep because of gas facilities. Section 6.02 shall be paid.

5. Price To Cover:

The bid price shall cover the additional cost of all supervision, labor, materials, equipment and insurance to complete the installation of catch basin and associated sewer connections in accordance with the contract plans and specifications. The price shall include: excavation by hand around and under single and multiple gas facilities; locating, supporting and protecting gas facilities incidental thereto; widening of trenches to facilitate the above work; subsequent additional backfilling and pavement restoration; modifying pre-cast basin window to accommodate connection; the installation of catch basin with deeper sumps as specified; additional sheeting and changes in sheeting method and configuration to accommodate gas facility crossings; maintenance and protection of traffic; barricades; and installation of traffic plates that may be required to temporarily close and/or complete the work.

SECTION 6.03 - Removal Of Abandoned Gas Facilities. All Sizes.

1. Description:

Under this section the Contractor shall provide all labor, materials, equipment, insurance and, incidentals required for the removal of abandoned gas mains, services, or appurtenances thereof, located within the street shown on the contract plans, owned by gas company operating in the project area (facility operator), used or to be used for or in connection with or to facilitate the conveying, transportation, distribution or furnishing of gas (natural or manufactured or mixture of both) for light, heat, or power, but does not include property used solely for or in connection with business of selling, distributing or furnishing of gas in enclosed containers. Such removal shall include only abandoned gas facilities that interfere with (i.e. cause additional work) City work.

2. Determination Of Operating Status Of Gas Facilities:

The Contractor shall notify facility operator, as required by New York State Industrial Code 753. Gas facilities shall not be removed without the approval of the facility operator whose authorized representative shall certify in writing (specific facility or area wide facilities certification) and in a timely manner acceptable to the Resident Engineer that abandoned facilities are free of combustible gas and any other environmental contaminants prior to removal. The Resident Engineer shall rely on facility operator's certification. The facility operator may request the excavation of test pits (See Section 6.07) for this determination ahead of City work and, Contractor shall provide safe access, facilitate and permit facility operator to enter test pit excavations for the purpose of testing gas facilities to be removed by the Contractor. However, facility operator may prefer to make this test during performance of City work, in order to issue the above certification. This shall be permitted provided that it is agreed that additional costs, if any resulting from this choice shall be a matter of adjustment between the Contractor and facility operator only, and at no cost to the City.

3. Restrictions:

The facility operator shall be solely responsible for its contaminated gas facilities, surrounding contaminated soil and their disposal and abatement procedures, unless contract bid items are applicable and provided for such work. In such cases, the quantity removed shall be charged to EP-7 bid item "UTL-GCS-2WS - GAS INTERFERENCES AND ACCOMMODATIONS" at the City bid prices.

4. Method Of Measurement:

Abandoned gas pipeline removal shall be measured for payment per linear foot of pipe and appurtenances removed.

5. Price To Cover:

The price shall cover all additional cost of supervision, labor, materials, equipment, and insurance necessary to complete this work in accordance with the contract plans and specifications, including excavation by hand around and under other City and facility operator owned properties and, where necessary, support and protection of such properties. The price shall also cover breaking, cutting, and/or burning of abandoned gas pipes and their disposal from the site; sealing open ends remaining in the excavation with concrete or caps (caps to be provided by the facility operator) and backfilling of the area where the pipeline has been removed with clean backfill. The price shall also include any required dump charges. This item does not include any type of extra excavation, backfilling, compaction, pavement removal and restoration associated with abandoned gas facilities removal, all of which are covered under Section 6.06.

SECTION 6.03.1 - Removal Of Abandoned Gas Facilities With Possible Coal Tar Wrap. All Sizes. (For National Grid Work Only)

1. Description:

Under this section the Contractor shall provide all labor, materials, equipment, insurance and, incidentals required for the removal of abandoned gas mains, services or appurtenances thereof, located within the street shown on the contract plans, owned by the gas company operating in the project area (facility operator), used or to be used for or in connection with or to facilitate the conveying, transportation, distribution or furnishing of gas (natural or manufactured or mixture of both) for light, heat, or power, but does not include property used solely for or in connection with business of selling, distributing or furnishing of gas in enclosed containers. Such removal shall include only abandoned gas facilities that interfere with (i.e. cause additional work) City work. These gas facilities may be coated with Coal Tar Wrap and so, may require special handling and disposal methods as specified in National Grid Standard Operating Procedure 12-2, Coal Tar Wrap Handling and 12NYCRR56.

2. Determination Of Operating Status Of Gas Facilities:

The Contractor shall notify facility operator, as required by New York State Industrial Code 753. Gas facilities shall not be removed without the approval of the facility operator whose authorized representative shall certify in writing (specific facility or area wide facilities certification) and in a timely manner acceptable to the Resident Engineer that abandoned facilities are free of combustible gas and any other environmental contaminants prior to removal. The Resident Engineer shall rely on the facility operator's certification. The facility operator may request the excavation of test pits (See Section 6.07) for this determination ahead of City work and, the Contractor shall provide safe access, facilitate and permit facility operator to enter test pit excavations for the purpose of testing gas facilities to be removed by the Contractor. However, the facility operator may prefer to make this test during performance of City work, in order to issue the above certification. This shall be permitted provided that it is agreed that additional costs, if any, resulting from this choice shall be a matter of adjustment between the Contractor and the facility operator only, and at no cost to the City contract. Should such investigation result in the determination that the abandoned gas facilities do not contain Coal Tar Wrap then the removal of said facilities shall be covered under separate item (See Section 6.03).

3. Requirements:

The City Contractor shall excavate abandoned gas facility sufficiently, either in its entirety, or at locations determined by Contractor to allow the removal of Coal Tar Wrap (if present on the abandoned gas facility) and to facilitate the safe extraction of manageable lengths of abandoned pipe without damage to adjacent facilities, utilities or City structures either parallel to or crossing above or below abandoned gas facility. The Contractor is to allow access to the designated cutting points within the Contractor's trench by authorized National Grid personnel who will remove the Coal Tar Wrap as per National Grid procedures. This work by National Grid personnel shall be performed in a timely fashion and shall not unduly impede the Contractor's progress and/or productivity. Upon completion of the coating removal, the Contractor shall be allowed to cut, burn or grind the gas facility and remove the section of abandoned pipe. The

Contractor at a site designated by the Contractor shall stockpile the removed pipe. The facility operator will be responsible to provide trucking and disposal services with its own personnel and shall remove the stockpiled pipes during off hours or during such time as agreed to by the Contractor. Since the pipe removed will remain the property of the facility operator and is to be disposed of by the facility operator, the facility operator shall be responsible for any required notifications, filings, dump charges and incidentals associated with the disposal of abandoned gas facilities found to contain Coal Tar Wrap.

4. Method Of Measurement:

Abandoned gas pipeline removal shall be measured for payment per linear foot of pipe and appurtenances removed.

5. Price To Cover:

The price shall cover all additional cost of supervision, labor, materials, equipment and insurance necessary to complete this work in accordance with the contract plans and specifications, including excavation by hand around and under other City and facility operator owned properties and, where necessary, the support and protection of such properties. The cost shall also include hand excavation in the area(s) of proposed abandoned pipe cut(s), cutting and/or burning of abandoned gas pipes and stockpile of removed sections of abandoned pipe and associated maintenance and protection of traffic, blocking and temporary fencing if required. The unit price shall also cover sealing open ends remaining in the excavation with concrete or end caps (end caps to be provided by the facility operator) and backfilling of the area where the abandoned pipeline has been removed with clean backfill material. This item does not include any type of extra excavation, backfilling, compaction, pavement removal and/or restoration (temporary and permanent) associated with abandoned pipe removal ("lost trench"), all of which are covered under separate Section 6.06. The price shall also include allowance for any loss of productivity by the Contractor due to required facility operator work to remove pipe coating and prepare pipe for cutting as well as any change in Contractor's excavation method, additional trucking and/or stockpiling costs.

SECTION 6.03.1a - Removal Of Abandoned Gas Facilities With Possible Coal Tar Wrap. All Sizes. (For Con Edison Work Only)

1. Description:

Under this section the Contractor shall provide all labor, material, equipment, insurance and, incidentals required to prepare abandoned gas mains, services and appurtenances thereof located within the street shown on contract plans, owned by the gas company operating in the project area (facility operator), for removal due to interference with proposed City work. These abandoned gas facilities were, at one time, used for or in connection with or to facilitate the conveying, transportation, distribution or furnishing of gas (natural, manufactured or a combination of both) for light, heat, or power, but does not include property used solely for or in connection with business of selling, distribution or furnishing of gas in enclosed containers. Such preparation for removal shall include only abandoned gas facilities that interfere with (i.e. cause additional work) City work. These gas facilities may be coated with Coal Tar Wrap which may contain asbestos or PCB's and so, may require special handling and disposal methods as specified in Con Edison - ASBESTOS MANAGEMENT MANUAL, CHAPTER 6 - ASBESTOS WORK PROCEDURES, SECTION 06.04 - COAL TAR WRAP REMOVAL. For under 25' (feet) in length and an approved NYC-DEP variance for over 25' (feet).

2. Determination Of Operating Status Of Gas Facilities:

The Contractor shall notify facility operator, as required by New York State Industrial Code 753. Gas Facilities shall not be removed without the approval of the facility operator whose authorized representative shall certify in writing (specific facility or area wide facilities certification) and in a timely manner acceptable to the Resident Engineer that abandoned facilities are free of combustible gas and any other environmental contaminants prior to removal. The Resident Engineer shall rely on the facility

operator's certification. The facility operator may request the excavation of test pits (See Section 6.07) for this determination ahead of City work and Contractor shall provide safe access, facilitate and permit facility operator to enter test pit excavations for the purpose of testing gas facilities. However, the facility operator may prefer to make this test during performance of City work in order to issue the above certification. This shall be permitted provided that it is agreed that additional costs, if any, resulting from this choice shall be a matter of adjustment between the Contractor and the facility operator only, and at no cost the City contract. Should such investigation result in the determination that the abandoned gas facilities do not contain Coal Tar Warp then the removal of said facilities shall be covered under separate item (See Section 6.03).

3. Requirements:

The Contractor shall excavate abandoned gas facility sufficiently, either in it's entirety, or at locations determined by Contractor to allow the removal of Coal Tar Wrap (if present on the abandoned gas facility) and to facilitate the safe extraction of manageable lengths of abandoned pipe without damage to adjacent facilities, utilities or city structures either parallel to or crossing above or below abandoned gas facility. The Contractor is to allow access to the designated cutting points within the Contractors trench by authorized Con Edison personnel who will remove the Coal Tar Wrap as per Con Edison and/or NYC-DEP approved procedures. This access shall conform to all applicable codes, rules & regulations. This work by Con Edison personnel shall be performed in a timely fashion and shall not unduly impede the Contractors progress and/or productivity. Upon completion of the coating removal, the Contractor shall be allowed to cut, burn or grind the gas facility and remove the section of abandoned pipe. Contractor shall designate a specific site to stockpile those removed pipes. The facility operator will be responsible to provide trucking and disposal services with its own personnel and shall remove the stockpiled pipes during off hours or during such time as agreed to by the Contractor. Since the pipe removed will remain the property of the facility operator and is to be disposed of by the facility operator, the facility operator shall be responsible for any required notifications, filings, dump charges and incidentals associated with the disposal of abandoned gas facilities found to contain Coal Tar Wrap.

4. Method Of Measurement:

Abandoned gas facility removal shall be measured for payment per linear foot of pipe and appurtenances removed.

5. Price To Cover:

The price shall cover all additional cost of supervision, labor, materials, equipment and insurance necessary to complete this work in accordance with the plans and specifications, including, but not limited to, excavation by hand around and under other City and facility operator owned properties and, where necessary, the support and protection of such properties. The cost shall also include hand excavation in the area(s) of proposed abandoned pipe cut(s), cutting and/or burning of abandoned gas pipes and stockpile of removed sections of abandoned pipe and associated maintenance of traffic, blocking and temporary fencing if required. The unit price shall also cover sealing open ends remaining in the excavation with concrete or end caps (end caps to be supplied by facility operator) and backfilling of the area where the abandoned pipeline has been removed with clean backfill material. This item does not include any type of extra excavation, backfilling, compaction, pavement removal and/or restoration (temporary and permanent) associated with abandoned pipe removal ("lost trench"), all of which are covered under separate Section 6.06. The price shall also include allowance for any loss of productivity by the Contractor due to required facility operator work to remove pipe coating and prepare pipe for cutting as well as any change in Contractor excavation method, additional trucking and/or stockpiling costs.

SECTION 6.04 - Adjust Hardware To Grade Using Spacer Rings/Adaptors. (Street Repaving.)

1. Description:

Under this section, the Contractor shall provide all labor, supervision, materials, equipment, insurance and incidentals required to adjust to final grade gas street surface hardware located within the contract area boundaries shown on the plans. The gas company operating in the area, (facility operator), owns these facilities. The work shall be performed in accordance with the contract plans, specifications and at the directions of the Resident Engineer in concurrence with authorized representative of the facility operator.

2. Materials:

The facility operator shall furnish and deliver all prefabricated hardware parts required. These include adaptors for the grade adjustment proper and new street hardware if existing ones are found to be defective, all in accordance with the facility operator standards and City rules and regulations. The Contractor shall notify the facility operator of the installation schedule at least three (3) business days before materials are required on the site. Should the facility operator fail to deliver the necessary material according to any schedule mutually agreed upon by the Contractor and facility operator, the City shall not be responsible for any delays attributable thereto, nor for the failure of delivery of such materials. On project where material storage is not permitted on site, the facility operator shall deliver the required material to the Contractor's yard and it shall be the Contractor's responsibility to transport the material to the work site when needed for installation. It shall also be the Contractor's responsibility to inspect the materials to be installed by him immediately upon delivery and advise the facility operator through its authorized representative, of all damaged materials. The Contractor at no additional expense to the City or the facility operator shall replace any material that is damaged or lost after the Contractor's inspection.

3. Method Of Measurement:

The Contractor shall be paid for each six (6) inch round box and/or nine (9) inch square box adjusted to grade regardless of adjustment height requirements.

4. Price To Cover:

The unit price bid for this item shall include all additional labor, supervision, insurance, equipment and, material (except those to be provided by the facility operator), required to adjust each box to grade as required in the contract plans and specifications. The bid price shall also include the removal of existing frames and covers from existing facilities to be salvaged and returned to the facility operator and, all material transportation from the Contractor's material storage yard to the work site. In addition the bid price shall include "chipping" around existing box using appropriate means and methods where grinding is required.

SECTION 6.05 - Adjust Hardware To Grade By Resetting. (Road Reconstruction.)

1. Description:

Under this item, the Contractor shall provide all labor, supervision, materials, equipment, insurance and incidentals required to adjust to the proposed grade gas street surface hardware located within the contract area boundaries shown on the plans. The gas company operating in the area, (facility operator), owns these facilities. The work shall consist of either building up or lowering or resetting the casting by removing the existing frame and cover building up or decreasing the existing installation, replacing the frame and/or cover if damaged or worn out, as determined by the Resident Engineer, with a new frame and/or cover furnished by the owner, and setting the frame and cover to new elevation. The work shall be performed in accordance with the contract plans, specifications and at the directions of the Resident Engineer.

2. Materials:

The facility operator shall furnish and deliver all new hardware parts required. The Contractor shall furnish materials such as mortar, bricks and concrete in compliance with contract requirements. At locations

where high-early strength concrete is required under this contract to be placed adjacent to gas facilities, then the requirement for concrete shall be high-early strength complying with the current New York State Department of Transportation, Standard Specifications for Class F concrete. Existing castings may be replaced as required and deemed necessary by the Engineer and by City rules and regulations. The Contractor shall install the new castings of various sizes furnished by the facility operator. The Contractor shall notify the facility operator of the installation schedule at least three (3) business days before materials are required on the site and, shall provide off-loading services to the facility operator. Should the facility operator fail to deliver the necessary material according to any schedule mutually agreed upon by the Contractor and facility operator, the City shall not be responsible for any delays attributable thereto, nor for the failure of delivery of such materials. Such delays shall be a matter of adjustment between the Contractor and the facility operator. On project where material storage is not permitted on site, the facility operator shall deliver the required material to the Contractor's yard and it shall be the Contractor's responsibility to transport the material to the work site when needed for installation. It shall also be the Contractor's responsibility to inspect the materials to be installed by him, immediately upon delivery and advise the facility operator through its authorized representative, of all damaged materials. The Contractor at no additional expense to the City or the facility operator shall replace any material that is damaged or lost after the Contractor's inspection.

3. Methods Of Construction:

The Contractor shall remove and reinstall existing castings or install new castings to the proposed grade. Setting and resetting the castings shall be done with mortar and brick according to the standards of the facility operator. Work shall be performed in a workmanlike manner. Castings that are deemed unacceptable for resetting shall remain the property of the facility operator and he shall be responsible for their removal and proper disposal from site. No traffic shall be allowed on adjusted street hardware until permitted by the Engineer.

4. Method Of Measurement:

The Contractor shall be paid for each gas hardware adjusted to grade regardless of size or adjustment height requirements (up or down).

5. Price To Cover:

The unit price bid for this item shall include all additional labor, supervision, insurance, equipment and, material (except those to be provided by the facility operator), required to adjust each gas hardware to grade as required in the contract plans and specifications. The bid price shall also include the removal of existing frames and covers from existing facilities; building up the existing installations with bricks and mortar, or lowering the existing installation by removing bricks and mortar; replacing damaged frames and/or covers with new frames and/or covers furnished by the facility operator; setting the frames and covers to the new elevations; protect existing installations; repair minor structural damages to existing installations prior to resetting frames; unloading of furnished castings at the Contractor's yard and transporting castings from the Contractor's yard to the job site as required; completing the work in accordance with the contract plans, specifications and, at the directions of the Engineer. In addition the bid price shall include "chipping" around existing gas facilities using appropriate means and methods where grinding is required.

SECTION 6.06 - Special Care Excavation And Backfilling.

1. Description:

Under this section, the Contractor shall provide all labor, materials, equipment, insurance and incidentals required to support and protect the integrity of live gas facilities including mains, services, related structures and appurtenances during excavations. The gas company operating in the area, (facility operator), owns these facilities. The work shall be performed in accordance with the contract plans, specifications and at the directions of the Resident Engineer in consultation with authorized

representatives of the facility operator.

2. Applicability Of Section:

This section shall apply to live gas facilities of various sizes located within two (2) feet of any face of unsheeted excavation, (unsheeted excavation refers to any excavation performed for city work and includes excavations performed that are to be subsequently sheeted using approved methods) and paralleling or, encroaching any face of excavation. Also, for crossings greater than forty-five (45) degrees and/or located at a cover depth greater than five (5) feet from existing street surface. Parallel facilities are not exposed at any time during excavation (See "Gas Cost Sharing Work Standard Sketch No. 5"). Encroaching facilities are partially exposed inside the limit of excavation (See "Gas Cost Sharing Work Standard Sketch No. 5"). This section shall also apply to gas facilities crossing catch basins excavation, and catch basins sewer connections (chutes) trench excavation only when extra depth (covered in other section), is not required for chutes installations because of such utilities interferences (See "Gas Cost Sharing Work Standard Sketch No. 3"). This section shall also apply to gas services (if shown or otherwise listed in contract documents) crossing unsheeted excavations for water mains, gas facilities crossing fire hydrant branch connections, house sewer and/or water service connections excavations. This section shall also apply for so called "loss trench", as described further, and for additional excavation (pavement and/or soil), backfilling, compaction, roadway base and pavement restoration due to abandoned gas facilities, only if removed by Contractor. If operating status of gas facilities cannot be determined prior to excavation then such facilities shall be considered live and this section shall fully apply. The excavation around fully exposed live gas facilities along and within limits of excavation (not crossings) shall be covered by this section also (not shown on "Gas Cost Sharing Work Standard Sketch No. 5"), however the support requirement, if any is required, of such facilities is beyond the scope of these specifications and therefore shall be the responsibility of facility operator to determine and prescribe, at no cost to the City contract, but shall be a matter of adjustment between the Contractor and facility operator.

3. Payment Restriction:

No special care excavation shall be paid for abandoned gas facilities paralleling and/or encroaching excavation and therefore are not in direct interference with City work. Except as allowed in this section, the bid item specified under this section shall not be used in combination with items covered under other sections for work done due to a particular gas facility. This item shall not be paid for new gas facilities when trenching for such new facilities has been performed by the Contractor of record in common with trench excavation for City Work (overlapping trench limits). The cost of excavating with care as defined in this section shall be deemed included in the cost of trench excavation for the new gas facilities. This restriction shall apply even if such gas common trench excavation is not part of the contract. If facilities are in direct interference with City work, meaning that "Minimum Clearances" described in "General Provisions; Gas Cost Sharing Work Paragraph No. 8" cannot be maintained and excavation has to be temporarily or permanently abandoned then this particular location shall become a test pit and dealt with as specified in Section 6.07 and "General Provisions; Gas Cost Sharing Work Paragraphs Nos. 2 and 8".

4. Method Of Construction:

All excavation in the vicinity of gas facilities shall be as required by NYS Industrial Code 753. Where these facilities are paralleling and located two (2) feet or less from the limits of the proposed excavation, the Contractor shall use hand excavation methods (pick and shovel or hand held power tools) to ascertain the clearances of these facilities with respect to the proposed excavation. Once the location of these facilities with respect to the proposed excavation is verified to the satisfaction of the Resident Engineer, the Contractor shall then proceed with a combination of hand and machine excavation as required preserving the integrity of the facilities. The installation of timber supports or underpinning, when soil foundation cannot fully support partially exposed pipes, may be required to prevent pipe movement as directed by the Resident Engineer.

5. Method Of Payment:

The unit price for this work item shall be based on cubic yard (CY) of average excavation with care and, is

to be considered as an incremental cost for performing City work with gas facilities interferences.

6. Method Of Measurement:

A. For Paralleling Facilities: Volume calculated as: Depth as measured from existing street surface to the bottom of unsheeted trench excavation allowable by OSHA regulations, multiplied by, the width measured as one (1) foot from the face of excavation toward the center of excavation, multiplied by the length of parallel facility, divided by twenty-seven (27) cubic feet per cubic yard (See "Gas Cost Sharing Work Standard Sketch No. 5"). The gas facility is no longer considered to be in interference once sheeting has been installed, therefore no further compensation for paralleling facilities as described above will be made.

B. For Encroaching Facilities: Volume calculated as: Depth of trench as allowable by OSHA, maximum up to five (5) feet multiplied by, the width of partially exposed pipe plus one (1) foot, multiplied by the length of facility encroachment, divided by twenty-seven (27) cubic feet per cubic yard (See "Gas Cost Sharing Work Standard Sketch No. 5").

C. Fully Exposed Gas Facilities: (Not shown on "Gas Cost Sharing Work Standard Sketch No. 5") along and inside trench and/or crossing trench at an angle greater than forty-five (45) degrees and/or a cover depth greater than five (5) feet from the existing street surface. The volume shall be measured as the depth of trench excavation multiplied by the distance measured along the sheeting line between two (2) points of intersections of the gas facilities and the sides of trench excavation, multiplied by the width of trench excavation.

D. For Additional Excavation And Restoration Due To So Called "Loss Trench", When The Integrity Of Pavement And Soil Above And Around Existing Live Gas Facilities Cannot Be Maintained Due To Its Lack Of Cohesiveness: Volume shall be calculated as: Depth of unsheeted trench excavation multiplied by width measured as distance of facility from closest edge of unsheeted excavation plus, width of facility proper plus, one (1) foot or a maximum width of three (3) feet multiplied by length of facility fully exposed divided by, twenty-seven (27) cubic feet per cubic yard (not shown on "Gas Cost Sharing Work Standard Sketch No. 5").

E. For Facilities Crossing Excavation For Catch Basins, Or Chutes Installations (When NYCDEP Funded) Or Fire Hydrant Branch Connections, Or Unsheeted Water Main Trench, Or House Sewer And/Or Water Services: Volume calculated as: Depth as measured from existing street surface to the bottom of the trench excavation multiplied by, the width taken as the outside diameter of pipe or the width of structure plus one (1) foot on either side (two (2) feet), multiplied by, the length of exposed facility crossing the trench, divided by twenty-seven (27) cubic feet per cubic yard (not shown on "Gas Cost Sharing Work Standard Sketch No. 5").

Overlapping volume dimensions measured as described above may occur when multiple facilities are paralleling excavations, encroaching excavations or crossing catch basins and catch basin chute installations. In such cases, all such facilities shall be counted as one limited by the extreme pipes, faces (See "Gas Cost Sharing Work Standard Sketch No. 2"). The volume shall then be calculated as described above.

7. Price To Cover:

The bid price shall also cover all additional supervision, labor, material, equipment and insurance necessary to excavate while protecting and maintaining (excluding supports for fully exposed live gas) gas facilities without disruption of service to the public and in accordance with contract specifications. The price shall also include, changes of sheeting method and excavation width configuration where necessary to accommodate gas facilities in their existing locations; difficulties during the installation of catch basins, chute connections, hydrant branch, and house sewer and water connections under or over gas facilities; loss of productivity due to slower rate of excavation (special care) during excavation, including the use of such methods as: hand excavation around existing single and multiple facilities, extra excavation and backfilling due to lost trench because of existing and adjacent gas facilities, compaction, removal of

sheeting from the facilities, extra roadway base restoration and temporary pavement, associated maintenance and protection of traffic, barricades, and traffic plates that may be required to temporarily close and/or complete the work.

SECTION 6.07 - Test Pits For Gas Facilities.

1. Description:

Under this section, the Contractor shall furnish all labor, materials, insurance, equipment and appliances necessary to excavate, sheet and, maintain test pits at locations approved by the Resident Engineer in consultation with the facility operator. Test pits shall be dug in order to ascertain exact locations, cover and invert elevations, clearances, alignment and operating status (live or dead) of existing gas facilities. The Contractor shall inspect jointly with the Resident Engineer and facility operator, gas facilities and other structures uncovered, take all relevant measurements and elevations as directed by the Resident Engineer. Tests to determine operating status of gas facilities shall be performed by facility operator. The pits shall be covered with steel plates during daytime nonworking hours, and uncovered, as required, until the inspection work is completed. Testing of gas facilities may require a maximum of four (4) hours. Then, the pits shall be backfilled with clean fill, and resurfaced with temporary pavement. All traffic shall be maintained and all safety measures as stipulated shall be complied with.

2. Methods Of Construction:

A. Excavation: Existing pavement to be removed shall be neatly cut along lines of removal with a saw or other approved equipment which leaves a neat straight joint line along the juncture with subsequently replaced pavement. Excavation in the vicinity of utilities and other structures shall be performed using hand tools. Use of hand operated pneumatic and electric jackhammers will be permitted only for breaking pavement and removal of masonry, concrete and boulders, or as otherwise directed by the Resident Engineer. The Contractor shall properly dispose of all materials excavated from test pits away from site. Test pits shall be excavated at locations shown on the contract drawings or as directed by the Resident Engineer. Additional test pits may be required and shall be excavated where required, as ordered by the Resident Engineer. All test pits shall be excavated to a depth and size necessary to locate the existing facilities. Sheeting shall be used when depth of excavation exceeds five (5) feet. The sheeting required shall be furnished and installed in full compliance with the State of New York and Federal Safety Codes requirements and as specified in contract, whichever is more stringent. Care shall be taken that no existing gas facilities or other structures are broken or damaged. All broken or damaged facilities shall be reported immediately to facility operator who shall decide whether such facilities shall be repaired or replaced by company forces or by City contractor and in conformance with "General Provisions; Gas Cost Sharing Work Paragraph No. 9". Contractor shall excavate all material encountered, including large masses of concrete, cemented masonry and boulders, as directed by the Resident Engineer. Any type of excavation protection used, shall satisfy the following:

   (a) Industrial Code Rule 753.
   (b) Prevent injury to workers and the public, and avoid damage to existing water, sewer, and gas pipes or other structures, and to pavements and their foundations, through caving or sliding of the banks of the excavation.

   Should it become necessary, as determined by the Resident Engineer, to enlarge any test pit in any dimension after sheeting has been placed, the Contractor shall remove portions of the sheeting, as necessary, enlarge the test pits as directed, and replace the sheeting without additional compensation for this work other than for the additional volume of material excavated.

B. Maintenance Of Test Pits: Excavated test pits shall be maintained free of debris and kept dry by the Contractor in order to permit the inspection and measurements and to determine the locations of facilities. In order to accomplish this, Contractor shall, upon completion of excavation and placement of sheeting (if depth greater than five (5) feet), furnish and install adequate steel plates and posting

over the excavated pits and shall temporarily remove all equipment debris and workers, and relocate barricades in order to open the full width of street to traffic during nonworking hours. The Contractor shall then, at no additional cost, relocate such barricades, barrels, cones and other warning devices and remove steel plates, as and when directed by the Resident Engineer to facilitate the inspection of exposed facilities. When work is being performed and the pits are not covered with steel plates, the Contractor shall provide complete and safe access to the test pits as may be required, and he shall provide construction barricades and maintain traffic at all times as shown or as directed by the Resident Engineer. Upon completion of test pit inspection by the Resident Engineer, the pit shall be backfilled by the Contractor as specified in contract, except that backfill material shall conform to contract specifications for such purpose.

C. Pavement And Sidewalk Restoration: After backfilling is completed, the Contractor shall construct a temporary pavement consisting of a minimum of four (4) inches thick asphaltic concrete mixture in roadway areas or a two (2) inches thick asphaltic concrete mixture in sidewalk areas in order to maintain existing pedestrian and vehicular traffic. This temporary pavement shall be maintained until permanent pavement and sidewalk replacement is constructed as specified in contract.

3. Measurements:

The quantity to be measured for payment shall be the number of cubic yards of material removed from within the limits of the pit dimensions as directed by the Resident Engineer. The volume occupied by existing pipes or other structures remaining within the maximum payment lines will not be deducted from the total volume measured except, where the cross sectional area of these facilities exceeds four (4) square feet. As determined by the Resident Engineer, the quantity measured for payment may be proportionate to a fair and reasonable estimate of gas responsibility in the total volume excavated.

4. Price To Cover:

The contract price bid per cubic yard for test pits shall cover all additional costs of labor, material, insurance, equipment, appliances and incidentals required to excavate test pits, including removal and disposal of excavated materials, sheeting, steel plating, backfill, compaction and temporary pavement and sidewalk restoration all in accordance with the specifications and as directed by the Resident Engineer. The price shall also include the cost of providing safe access to the excavation by facility operator for the performance of certain test to determine operating status of gas facilities prior to City work. The price shall also include support and protection of all gas facilities crossing excavation, paralleling and/or encroaching any face of excavation.

SECTION 6.09 - Trench Excavation and Backfill for New Gas Mains and Services (For National Grid Work Only)

1. Description:

Under this section, the contractor shall furnish all labor, materials, equipment, insurance, permits and incidentals required to break/remove roadway and sidewalk pavement, excavate, backfill and restore gas trenches. The trench to be excavated shall be determined by the size of the gas facility to be installed. The work shall be performed in accordance with applicable specifications, and/or at the direction of the Resident Engineer in consultation with the facility operator.

2. Materials:

All materials used to excavate and prepare trenches shall be supplied by the Contractor and be approved by the facility operator in consultation with the Resident Engineer.

3. Method of Construction:

Excavation – The Contractor shall saw cut and/or break and remove existing roadway which may include

but is not limited to, asphalt, concrete and cobblestone, utilizing approved equipment that leaves a neat straight joint line along the juncture with subsequently replaced pavement. Prior to starting the trenching operation, the contractor shall excavate the appropriate gas main tie-in pits at the extremities of the gas main sections to be replaced. Test pits shall be excavated to determine exact location of all tie-in pits and at appropriate intervals along proposed trench excavation to verify lane and clearances as shown on the contract plans. The tie-in pits shall be adequately protected by the contractor using wood fencing or steel traffic plates until such time when the facility operator has completed the tie-in work. The Contractor shall be permitted to excavate utilizing a combination of machine and hand excavation, as field conditions warrant, and as directed by the facility operator. The trench shall be adjusted so as to provide for a nominal cover on the new gas facilities or as required based on field conditions, applicable specifications, or as directed by the facility operator in consultation with the Resident Engineer. The width of the trench shall be as directed by the facility operator in consultation of the Resident Engineer. The bottom of the trench shall be graded smooth with a minimum cushion of 3 inches of clean sand and in conformance with applicable specification and be compacted, to minimize initial settlement and to avoid "point" support of new gas facilities. All stones projecting into the trench bottom shall be removed, and the voids backfilled before the new gas facilities are installed. Where streets are not to final grade, the cover shall be measured from the final grade, or the existing grade, whichever provides the deeper trench. Excavation in the vicinity of utilities and other structures shall be performed using hand tools. The contractor shall properly dispose of all materials excavated away from site. Size and location of excavation shall be as directed by the facility operator in consultation with the Resident Engineer. Trenches shall be excavated to a depth and size necessary to facilitate the installation of the new gas facility and in conformance with the applicable specification. All existing facilities that are encountered during trench excavating shall be protected in a manner suitable to the facility operator in consultation with the Resident Engineer. Tight sheeting shall be used, as required, based on field conditions and/or when the depth of excavation is equal to or greater than five feet. Skeleton type sheeting will not be permitted. The sheeting required shall be furnished and installed in full compliance with the State of New York and Federal Safety Code requirements and in compliance with applicable specifications and/or as directed by the facility operator in consultation with the Resident Engineer. Care shall be taken that no existing gas facilities or other structures are broken or damaged. Contractor shall excavate all material encountered necessary to facilitate the installation of the new gas facilities, and as directed by the facility operator. Care should be taken to avoid damage to existing utility facilities and structures, and to pavements and their foundations, and to avoid caving or sliding banks within the excavation.

Maintenance of Trench Excavation - Excavated trenches shall be maintained free of debris and kept dry by the contractor. In order to accomplish this, contractor shall, upon completion of excavation and placement of sheeting (as required and/or if depth is equal to or greater than five feet), furnish and install adequate steel plates, as directed by the facility operator in consultation with the Resident Engineer, and posting over the excavated trenches and shall temporarily remove all equipment debris and workers, and relocate barricades in order to open the full width of street to traffic during non-working hours, as required based on DOT requirements. National Grid forces will perform all live gas main connections, dead gas main cut-outs, and/or service work associated with disconnecting and reconnecting from old to new gas main The Contractor shall then, at no additional cost, relocate such barricades barrels, cones and other warning devices and remove steel plates, as and when directed by the facility operator in consultation with the Resident Engineer to facilitate the installation of the new gas facilities. When work is being performed and the excavations are not covered with steel plates, the Contractor shall provide complete and safe access to the trench as may be required, and shall provide construction barricades and maintain traffic at all times as shown or as directed by the facility operator in consultation with the Resident Engineer. The contractor has the responsibility to maintain and set to grade all National Grid hardware during backfill and pavement restoration. Upon completion of installation of the new gas facility, the trench excavation shall be backfilled by the contractor in accordance with Contract requirements and all backfill material shall conform to contract specifications for such purpose.

Pavement and Sidewalk Restoration - After backfilling is completed, the contractor shall install temporary pavement consisting of six inches (6") thick asphaltic concrete mixture in roadway areas or a two inches (2") thick asphaltic concrete mixture in sidewalk areas in order to maintain existing pedestrian and vehicular traffic. This temporary pavement shall be maintained until permanent replacement as specified in contract. Permanent pavement restoration shall be as required by the appropriate contract

specifications and as directed by the Resident Engineer.

4. Method of Measurement:

The quantity to be measured for payment shall be the number of cubic yards (C.Y.) of trench actually excavated, including roadway pavement, base and/or sidewalk concrete removed within the limits of the trench as directed by the Resident Engineer in consultation with the facility operator. The volume occupied by existing pipes or other structures will be deducted from the total volume measured as shown on contract drawing(s) Title: EP-7 SECT. 6.09 GAS SPECIALTY CONTRACTOR WORK, or as encountered based on existing field conditions.

5. Price to Cover:

The unit price bid per cubic yard for excavation shall include the cost of all supervision, labor, material, equipment, insurance and incidentals necessary to complete excavation trenches, including backfill, compaction testing and restoration of trenches and tie-ins pits as specified or shown on the contract, plans. The bid price shall also include the cost of coordinating the sewer and water main work to be performed by the contractor with the gas installation work to be performed by others. The price shall also include, associated maintenance of traffic, and traffic plates and openings and closings of plates as may be required in order to provide access to the facility operator during the new gas facility installation, and installing, removing and maintaining tight sheeting that may be required, cut, break and remove various thickness of surface and base pavement, excavate by hand, furnish, place and compact, in compliance with DOT requirements, clean sand backfill following installation of the gas facility. Any required removing, trucking, storing, and disposing of material shall be deemed included in the unit price. The price shall also include the cost of providing temporary pavement restoration. Permanent pavement restoration shall be deemed included in this item, as required and as directed by the Resident Engineer.

SECTION 6.09a Trench Excavation and Backfill for New Gas Mains and Services (For Con Edison Work Only)

1. Description:

Under this section, the contractor shall furnish all labor, materials, equipment, insurance, permits and incidentals required to break/remove roadway and sidewalk pavement, excavate, backfill and restore gas trenches. The trench to be excavated shall be determined by the size of the gas facility to be installed. The work shall be performed in accordance with applicable specifications, and/or at the direction of the Resident Engineer in consultation with the facility operator.

2. Materials:

All materials used to excavate and prepare trenches shall be supplied by the Contractor and be approved by the facility operator in consultation with the Resident Engineer. Clean sand backfill material shall be used and shall conform to Con Edison specification EO-1181-rev.6, General Specification for Backfilling of Trench and Small Openings.

3. Method of Construction:

Excavation – The Contractor shall saw cut and/or break and remove existing roadway which may include but is not limited to, asphalt, concrete and cobblestone, utilizing approved equipment that leaves a neat straight joint line along the juncture with subsequently replaced pavement. Prior to starting the trenching operation, the contractor shall excavate the appropriate gas main tie-in pits at the extremities of the gas main sections to be replaced. Test pits shall be excavated to determine exact location of all tie-in pits and at appropriate intervals along proposed trench excavation to verify lane and clearances as shown on the contract plans. The tie-in pits shall be adequately protected by the contractor using wood fencing or steel traffic plates until such time when the facility operator has completed the tie-in work. The Contractor shall be permitted to excavate utilizing a combination of machine and hand excavation, as field conditions warrant, and as directed by the facility operator. The trench shall be adjusted so as to provide for a

nominal cover on the new gas facilities or as required based on field conditions, applicable specifications, or as directed by the facility operator in consultation with the Resident Engineer. The width of the trench shall be as directed by the facility operator in consultation of the Resident Engineer. The width and depth of the trench shall conform to Con Edison Gas Operations drawing 309495 rev. 4, Trench Excavation for Gas Mains Up to 350 PSIG, or as directed by the facility operator in consultation of the Resident Engineer. The bottom of the trench shall be graded smooth with a minimum cushion of 3 inches of clean sand and in conformance with applicable specification and be compacted, to minimize initial settlement and to avoid "point" support of new gas facilities. All stones projecting into the trench bottom shall be removed, and the voids backfilled before the new gas facilities are installed. Where streets are not to final grade, the cover shall be measured from the final grade, or the existing grade, whichever provides the deeper trench. Excavation in the vicinity of utilities and other structures shall be performed using hand tools. The contractor shall properly dispose of all materials excavated away from site. Size and location of excavation shall be as directed by the facility operator in consultation with the Resident Engineer. Trenches shall be excavated to a depth and size necessary to facilitate the installation of the new gas facility and in conformance with the applicable specification. All existing facilities that are encountered during trench excavating shall be protected in a manner suitable to the facility operator in consultation with the Resident Engineer. Tight sheeting shall be used, as required, based on field conditions and/or when the depth of excavation is equal to or greater than five feet. Skeleton type sheeting will not be permitted. The sheeting required shall be furnished and installed in full compliance with the State of New York and Federal Safety Code requirements and in compliance with applicable specifications and/or as directed by the facility operator in consultation with the Resident Engineer. Care shall be taken that no existing gas facilities or other structures are broken or damaged. Contractor shall excavate all material encountered necessary to facilitate the installation of the new gas facilities, and as directed by the facility operator. Care should be taken to avoid damage to existing utility facilities and structures, and to pavements and their foundations, and to avoid caving or sliding banks within the excavation.

Maintenance of Trench Excavation - Excavated trenches shall be maintained free of debris and kept dry by the contractor. In order to accomplish this, contractor shall, upon completion of excavation and placement of sheeting (as required and/or if depth is equal to or greater than five feet), furnish and install adequate steel plates, as directed by the facility operator in consultation with the Resident Engineer, and posting over the excavated trenches and shall temporarily remove all equipment debris and workers, and relocate barricades in order to open the full width of street to traffic during non-working hours, as required based on DOT requirements. Con Edison forces will perform all live gas main connections, dead gas main cut-outs, and/or service work associated with disconnecting and reconnecting from old to new gas main The Contractor shall then, at no additional cost, relocate such barricades barrels, cones and other warning devices and remove steel plates, as and when directed by the facility operator in consultation with the Resident Engineer to facilitate the installation of the new gas facilities. When work is being performed and the excavations are not covered with steel plates, the Contractor shall provide complete and safe access to the trench as may be required, and shall provide construction barricades and maintain traffic at all times as shown or as directed by the facility operator in consultation with the Resident Engineer. The contractor has the responsibility to maintain and set to grade all Con Edison hardware during backfill and pavement restoration. Upon completion of installation of the new gas facility, the trench excavation shall be backfilled by the contractor in accordance with Contract requirements and all backfill material shall conform to contract specifications for such purpose.

Pavement and Sidewalk Restoration - After backfilling is completed, the contractor shall install temporary pavement consisting of six inches (6") thick asphaltic concrete mixture in roadway areas or a two inches (2") thick asphaltic concrete mixture in sidewalk areas in order to maintain existing pedestrian and vehicular traffic. This temporary pavement shall be maintained until permanent replacement as specified in contract. Permanent pavement restoration shall be as required by the appropriate contract specifications and as directed by the Resident Engineer.

4. Method of Measurement:

The quantity to be measured for payment shall be the number of cubic yards (C.Y.) of trench actually excavated, including roadway pavement, base and/or sidewalk concrete removed within the limits of the trench as directed by the Resident Engineer in consultation with the facility operator. The volume occupied

by existing pipes or other structures will be deducted from the total volume measured as shown on contract drawing(s) Title: EP-7 SECT. 6.09 GAS SPECIALTY CONTRACTOR WORK, or as encountered based on existing field conditions.

5. Price to Cover:

The unit price bid per cubic yard for excavation shall include the cost of all supervision, labor, material, equipment, insurance and incidentals necessary to complete excavation trenches, including backfill, compaction testing and restoration of trenches and tie-ins pits as specified or shown on the contract, plans. The bid price shall also include the cost of coordinating the sewer and water main work to be performed by the contractor with the gas installation work to be performed by others. The price shall also include, associated maintenance of traffic, and traffic plates and openings and closings of plates as may be required in order to provide access to the facility operator during the new gas facility installation, and installing, removing and maintaining tight sheeting that may be required, cut, break and remove various thickness of surface and base pavement, excavate by hand, furnish, place and compact, in compliance with DOT requirements, clean sand backfill following installation of the gas facility. Any required removing, trucking, storing, and disposing of material shall be deemed included in the unit price. The price shall also include the cost of providing temporary pavement restoration. Permanent pavement restoration shall be deemed included in this item, as required and as directed by the Resident Engineer.

GAS COST SHARING STANDARD SPECIFICATIONS
SCHEDULE GCS-A

Average rate charged by utility companies to Disconnect and Reconnect Gas Services:

1. National Grid - $586.90 per Service/and Visit
2. Con Edison - $524.00 per Service/and Visit

IV - STANDARD SKETCHES; GAS COST SHARING WORK

Hereinafter attached are the following Standard Sketches for Gas Cost Sharing Work:

Sketch No. 1 - Support Requirements For Gas Mains And Services Crossing Excavation Greater Than 4' - 0" Wide At Any Angle

Sketch No. 1A - Support Requirements For Gas Mains Over 16" Diameter Up To And Including 48" Diameter Crossing Excavation At Any Angle

Sketch No. 2 - Typical Methods Of Measurement For Gas Crossings

Sketch No. 3 - Utility Crossings During Catch Basin Chute Connection Pipe Installation

Sketch No. 4 - Utility Crossings During Catch Basin Chute Connection Pipe Installation (Extra Depth)

Sketch No. 5 - Gas Main Encroachment On And/Or Parallel To Excavation Of Unsheeted Trench

GAS COST SHARING WORK (SKETCH NO. 1)

SUPPORT REQUIREMENTS FOR GAS MAINS AND SERVICES CROSSING EXCAVATION GREATER THAN 4'-0" WIDE AT ANY ANGLE

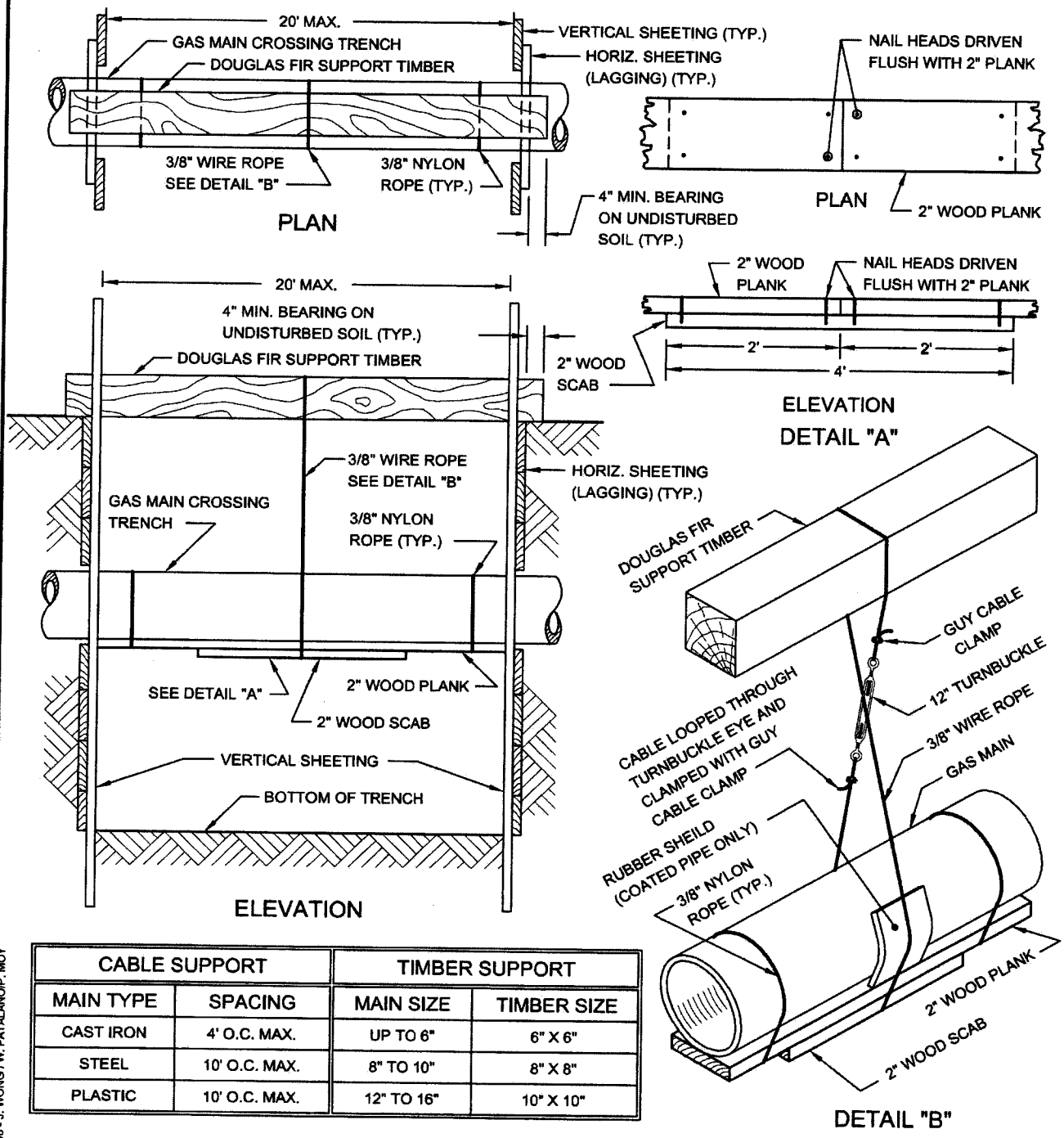

CABLE SUPPORT		TIMBER SUPPORT	
MAIN TYPE	SPACING	MAIN SIZE	TIMBER SIZE
CAST IRON	4' O.C. MAX.	UP TO 6"	6" X 6"
STEEL	10' O.C. MAX.	8" TO 10"	8" X 8"
PLASTIC	10' O.C. MAX.	12" TO 16"	10" X 10"

REVISED OCT. 2004 - L. ADRIEN
REVISED JUNE 1998 - J. WONG / W. PATALANOP, MOY

GAS COST SHARING WORK (SKETCH NO. 1A)

SUPPORT REQUIREMENTS FOR GAS MAINS OVER 16" DIAMETER UP TO AND INCLUDING 48" DIAMETER CROSSING EXCAVATION AT ANY ANGLE

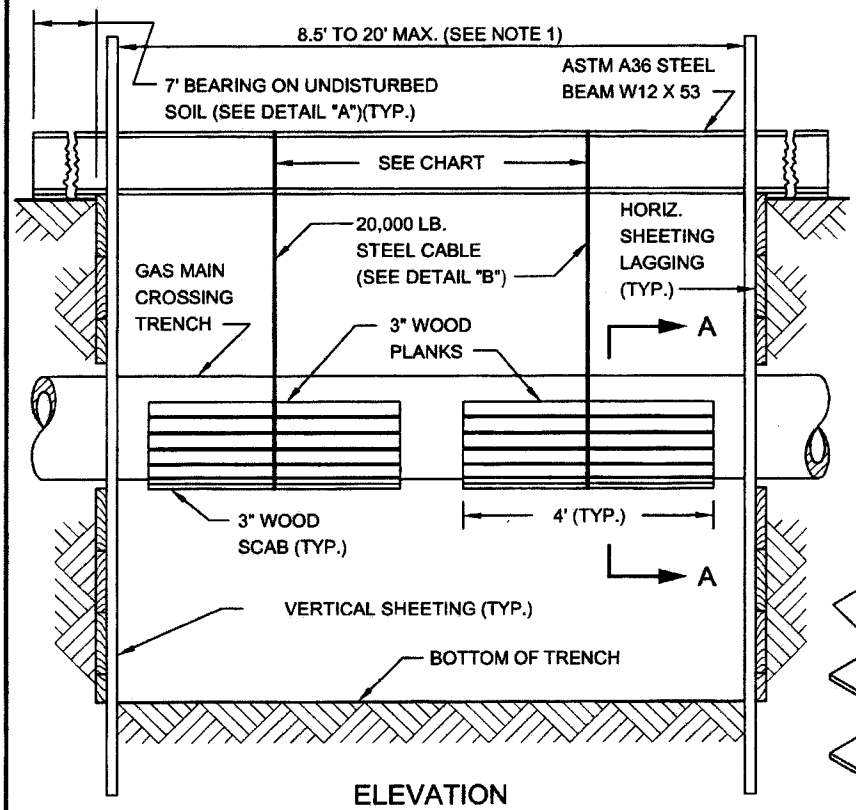

ELEVATION

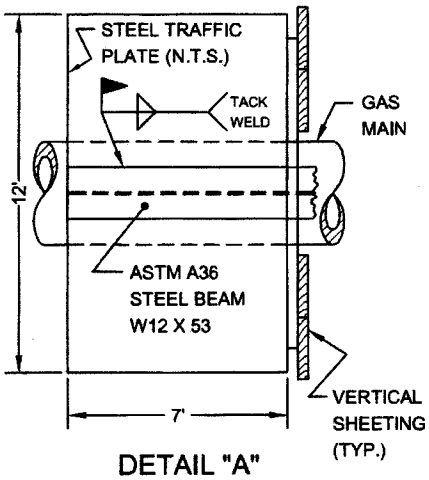

DETAIL "A"

CABLE SUPPORT	
MAIN TYPE	SPACING
CAST IRON	4' O.C. MAX.
STEEL	10' O.C. MAX.

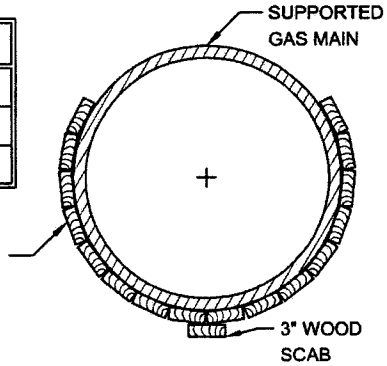

SECTION A-A

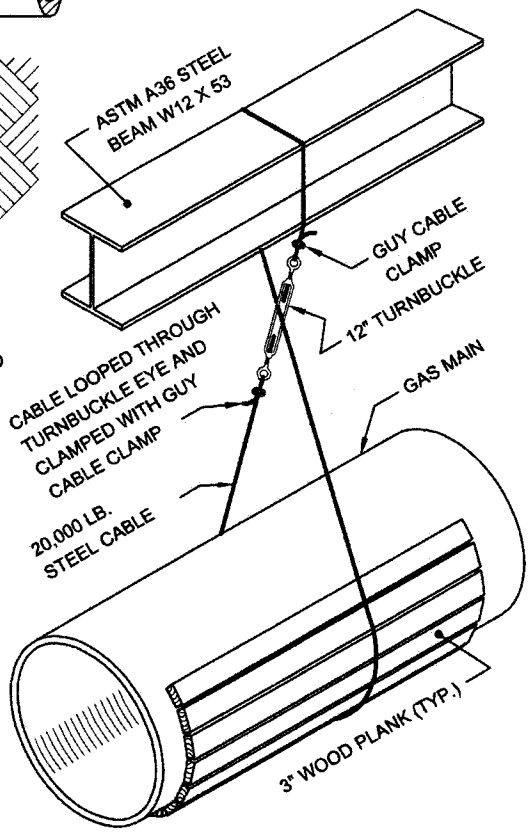

DETAIL "B"

NOTES:

(1) NO SUPPORT IS REQUIRED FOR GAS MAINS OVER 16" DIA. UP TO AND INCLUDING 48" DIA. CROSSING TRENCHES LESS THAN 8.5' WIDE.

(2) UNDERMINE A MAXIMUM OF 8.5 L.F. OF CAST IRON GAS MAIN AT A TIME.

(3) SET STEEL CABLE OVER 3" WOOD PROTECTIVE PLANKS AND PLACE AN ADDITIONAL 3" SCAB ON THE BOTTOM OF THE GAS MAIN.

(4) ADJUST STEEL CABLE UNTIL DEAD WEIGHT OF THE UNDERMINED GAS MAIN HAS BEEN TAKEN UP BY THE OVERHEAD STEEL BEAM SUPPORT.

(5) ALL SUPPORTS AND STEEL CABLES CAN BE REOMVED ONLY AFTER THE REQUIRED BACKFILL (AROUND AND BELOW GAS MAIN) HAS BEEN COMPACTED IN ACCORDANCE WITH NEW YORK CITY STANDARDS AND AT THE DIRECTIONS OF THE ENGINEER.

REVISED OCT. 2004 - J. ADRIEN
REVISED JUNE 1998 - J. WONG / W. PATALANOP, MOY

GAS COST SHARING WORK (SKETCH NO. 2)

TYPICAL METHODS OF MEASUREMENT FOR GAS CROSSINGS

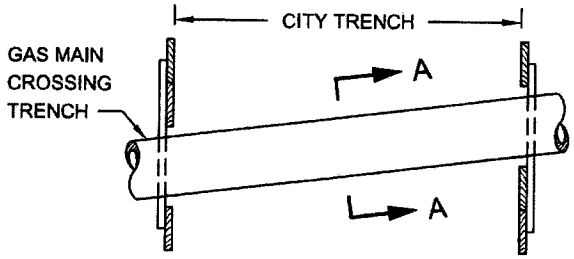

SINGLE FACILITY CROSSING

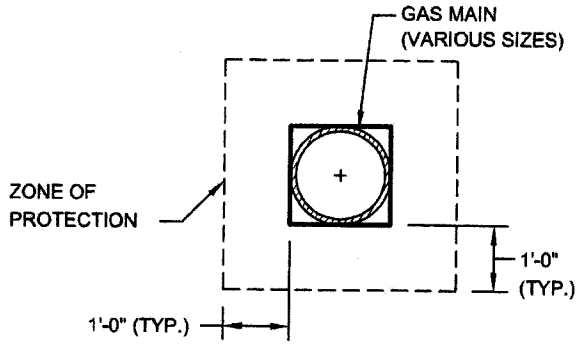

SECTION A-A

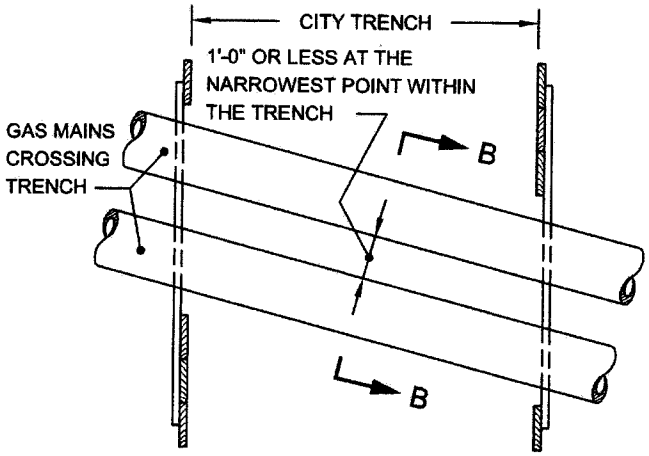

MULTIPLE FACILITIES
(GAS MAINS AT SAME ELEVATION)

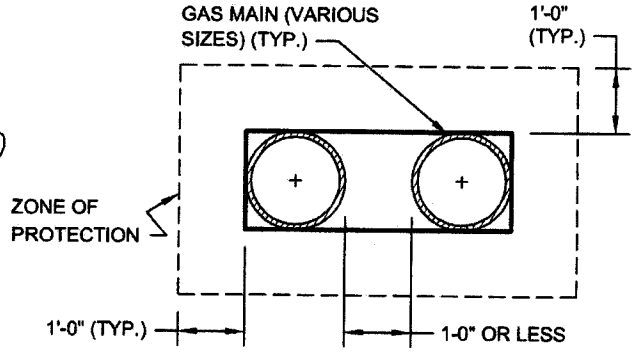

SECTION B-B

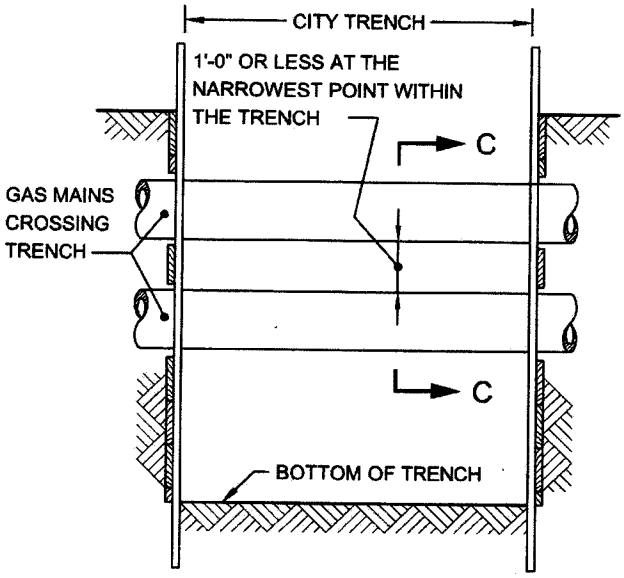

MULTIPLE FACILITIES
(ONE CROSSING AT DIFFERENT ELEVATIONS)

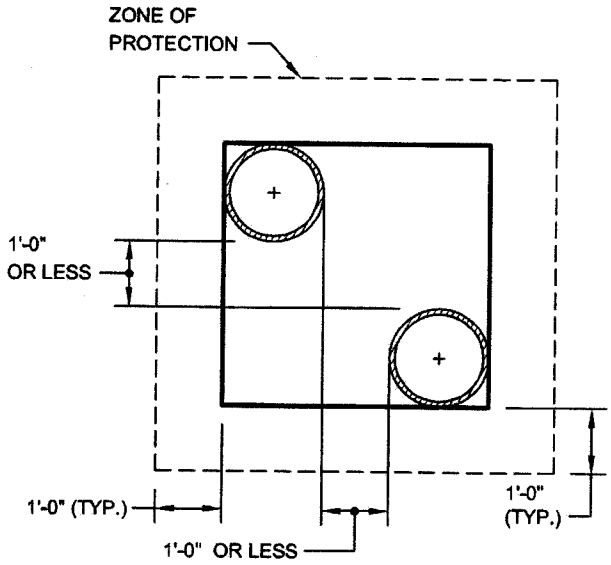

SECTION C-C

NOTE:

GAS MAINS MAY OR MAY NOT BE PARALLEL TO EACH OTHER.

REVISED SEPT. 2004 - J. ADRIEN
REVISED SEPT. 2004 - J. WONG/W. PATALANO/P. MOY

GAS COST SHARING WORK (SKETCH NO. 3)

UTILITY CROSSINGS DURING CATCH BASIN CHUTE CONNECTION PIPE INSTALLATION

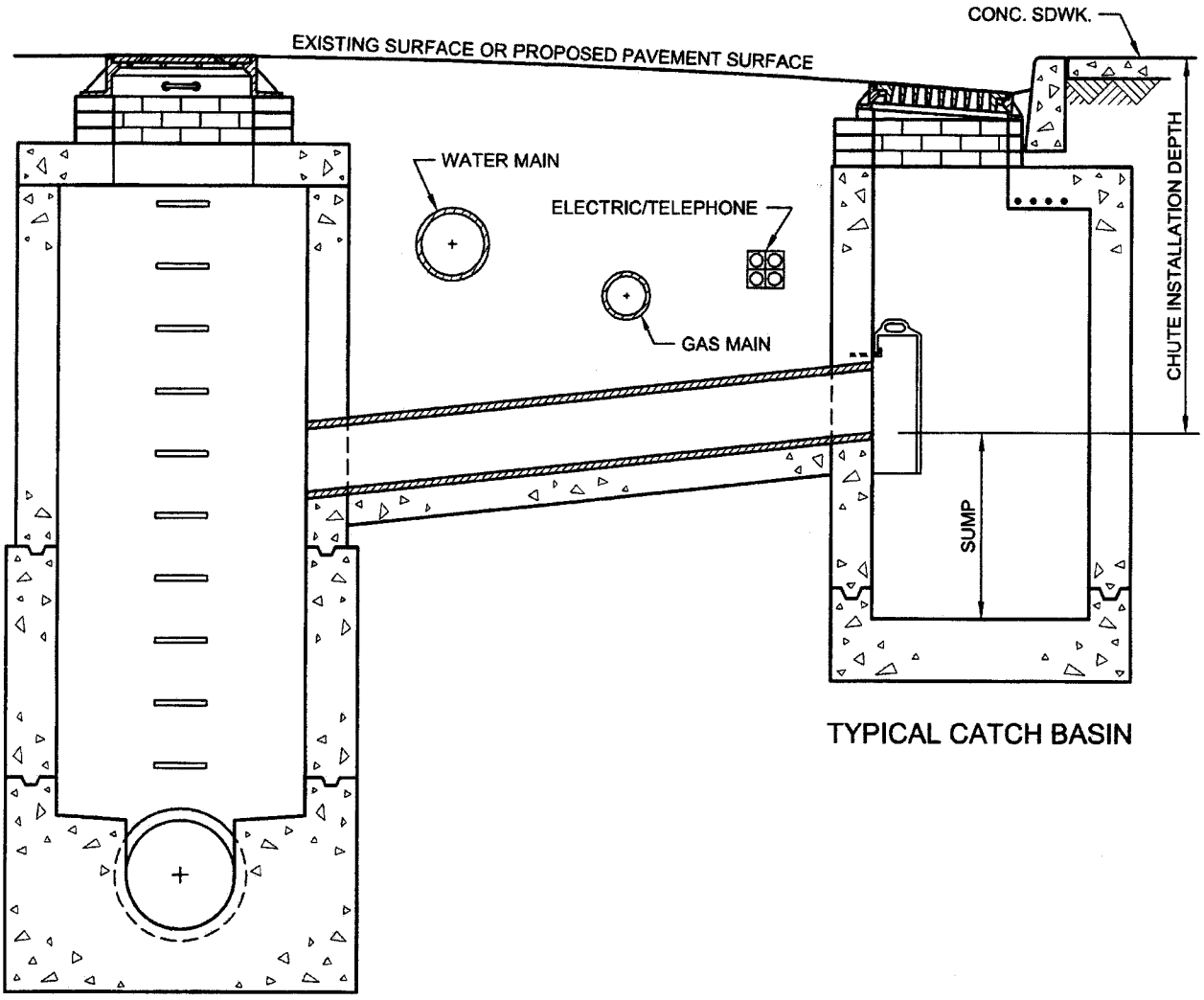

TYPICAL CATCH BASIN

TYPICAL SEWER MANHOLE

REVISED OCT. 2004 - L. ADRIEN
REVISED OCT. 1998 - J. WONG/W. PATALANO/P. MOY

GAS COST SHARING WORK (SKETCH NO. 4)

UTILITY CROSSINGS DURING CATCH BASIN CHUTE CONNECTION PIPE INSTALLATION (EXTRA DEPTH)

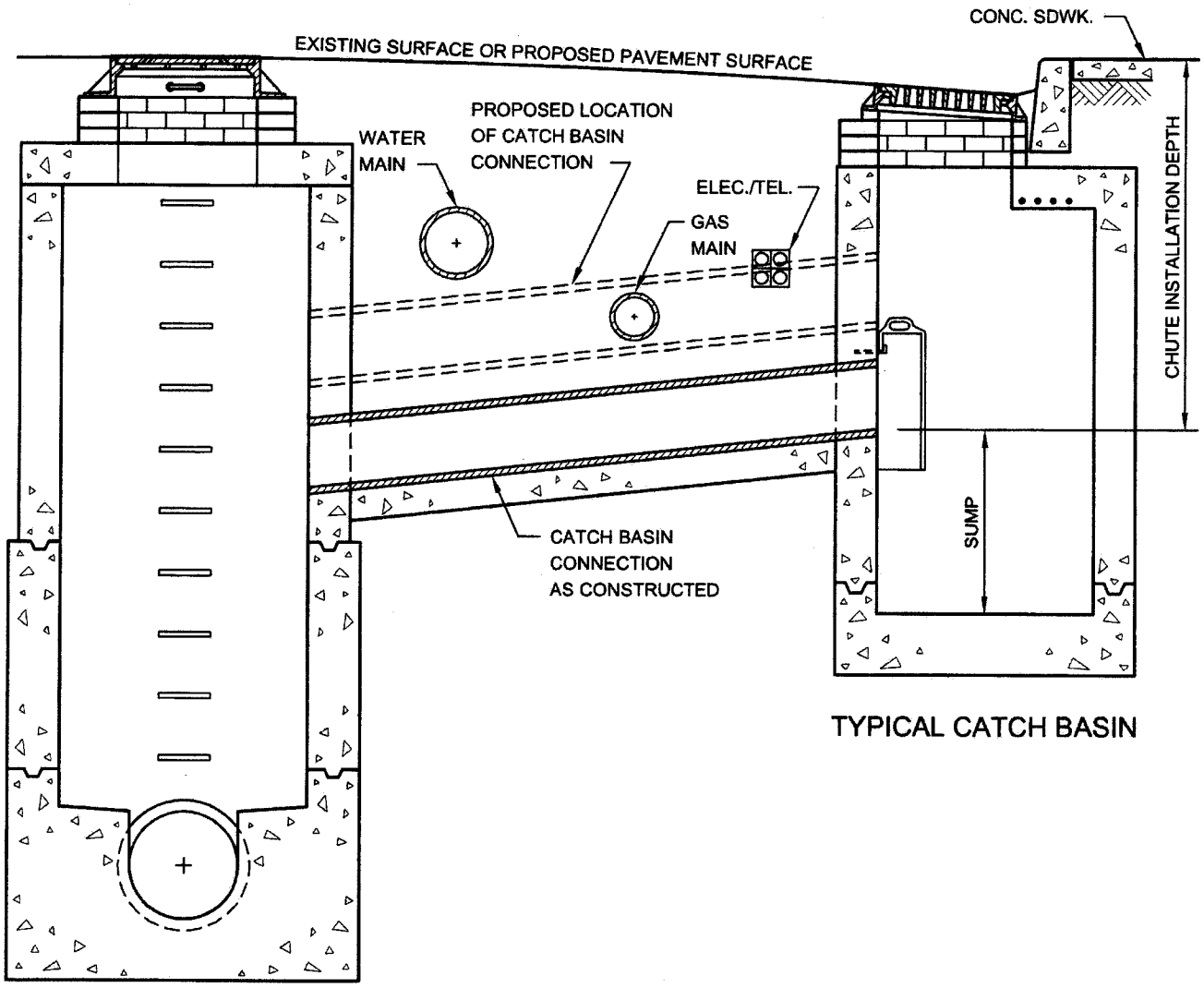

TYPICAL CATCH BASIN

TYPICAL SEWER MANHOLE

REVISED OCT. 2004 - L. ADRIEN
REVISED OCT. 1998 - J. WONG/W. PATALANO/P. MOY

GAS COST SHARING WORK (SKETCH NO. 5)

GAS MAIN ENCROACHMENT ON AND/OR PARALLEL TO EXCAVATION OF UNSHEETED TRENCH

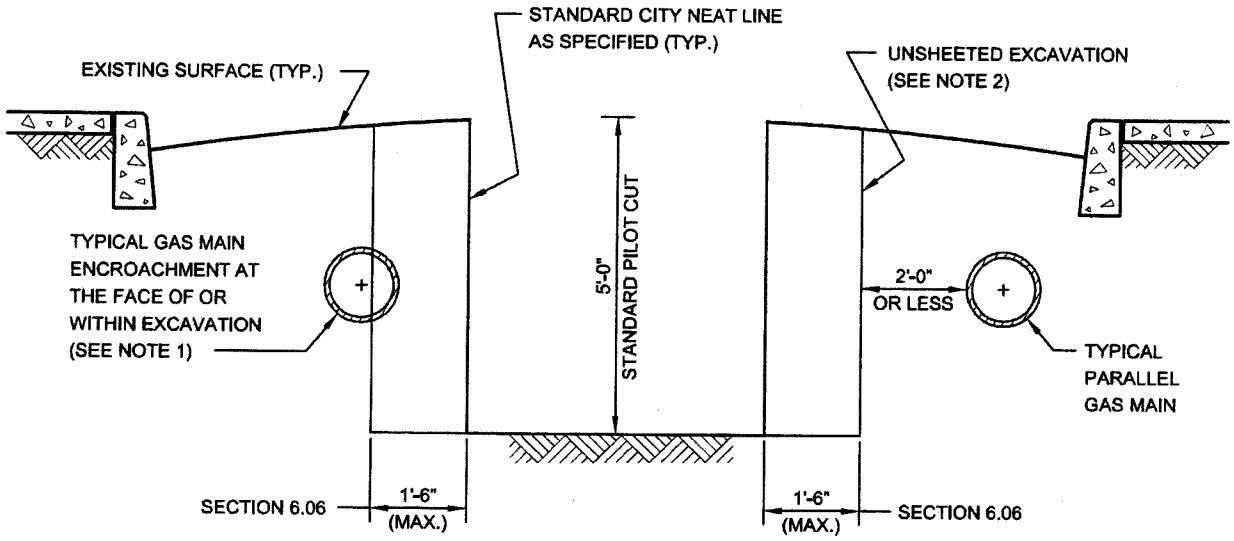

NOTES:

(1) GAS MAIN LOCATED AS SHOWN MAY HAVE TO BE REMOVED BY THE FACILITY OPERATOR PRIOR TO THE START OF CITY EXCAVATION, OTHERWISE, THE CONTRACTOR WILL BE PAID UNDER SECTION 6.06 FOR THE SAID WORK. IF GAS MAIN IS ABANDONED THEN SECTION 6.03 SHALL APPLY.

(2) EIGHTEEN (18) INCHES FROM STANDARD NEAT LINE IS THE MAXIMUM ALLOWABLE WIDTH OF AREA THAT MAY BE DISTURBED OR EXCAVATED DURING INSTALLATION OF CERTAIN TYPES OF SHEETING SYSTEMS THAT MEET THE REQUIREMENTS OF THE STANDARD SPECIFICATIONS OF THE DEPARTMENT OF DESIGN AND CONSTRUCTION OF THE CITY OF NEW YORK.

REVISED OCT. 2004 - L. ADRIEN
REVISED OCT. 1998 - J. WONG/W. PATALANO/P. MOY

V - PRELIMINARY GAS WORK TO BE PERFORMED BY FACILITY OPERATOR.

APPLICABLE TO ALL GAS DRAWINGS:

- ALL RELOCATION WORK SHOWN IN THIS SECTION IS TO BE PERFORMED BY FACILITY OPERATOR.
- ALL SUPPORT AND PROTECTION WORK TO BE PERFORMED BY CITY CONTRACTOR
- IF ADDITIONAL INFORMATION IS NEEDED REGARDING THE FACILITY OPERATOR'S RELOCATION WORK, THE CONTRACTOR IS ADVISED TO CONTACT THE GAS COMPANY REPRESENTATIVE:

  Neville Jacobs Jr.
  NationalGrid Energy Delivery
  287 Maspeth Avenue
  Brooklyn, NY 11211
  718-963-5612

(NO TEXT IN THIS AREA, TURN PAGE)

Contract # BED798
Funding Project # CNCC307

COVER SHT 1 OF 2

ITEM	SHEET	ON STREET	ACTIVITY	SIZE	PRESSURE	MATERIAL	LENGTH IN FT.	REIMB./NON-REIMB.
1	1,2,3,5,6	BALTIC ST.	INST.	8"	15 PSI	PE	1625	REIMB.
2	1,2,5	BALTIC ST.	RET.	4"	15 PSI	ST	720	REIMB.
3	2	GREGORY PL.	RET.	4"	15 PSI	PE	260	REIMB.
4	2	GREGORY PL.	INST.	6"	15 PSI	PE	330	REIMB.
5	3,4	BULTER ST.	INST.	6"	15 PSI	PE	695	REIMB.
6	3,4	BULTER ST.	RET.	4"	15 PSI	PE	513	REIMB.
7	4	BULTER ST.	RET.	6"	15 PSI	ST	150	REIMB.
8	5,6	PARK PL.	RET.	6"	6WC	CI	165	REIMB.
9	5	PARK PL.	RET.	6"	6WC	PE	520	REIMB.
10	6	PARK PL.	RET.	6"	6WC	PE	170	REIMB.
11	6	PARK PL.	RET.	6"	6WC	CI	45	REIMB.
12	6	PARK PL.	RET.	6"	6WC	ST	65	REIMB.
13	6	PARK PL.	RET.	6"	6WC	ST	40	REIMB.
14	6,7,8	6 AVE.	RET.	12"	6WC	ST	635	REIMB.
15	6,7	6 AVE.	INST.	12"	6WC	PE	695	REIMB.
16	6	PARK PL.	INST.	6"	6WC	PE	15	REIMB.
17	7	6 AVE.	INST.	8"	6WC	PE	60	REIMB.
18	7	6 AVE.	RET.	8"	6WC	PE	40	REIMB.
19	8	6 AVE.	RET.	8"	6WC	PE	65	REIMB.
20	8	6 AVE.	INST.	8"	6WC	PE	75	REIMB.
21	8,9,10,11,12,13	ST. JOHNS PL.	INST.	8"	6WC	PE	3630	REIMB.
22	8	ST. JOHNS PL.	RET.	8"	6WC	ST	37	REIMB.
23	8	ST. JOHNS PL.	RET.	8"	6WC	CI	527	REIMB.
24	9,10	ST. JOHNS PL.	RET.	8"	6WC	CI	400	REIMB.
25	9	ST. JOHNS PL.	RET.	4"	6WC	CI	25	REIMB.
26	9	ST. JOHNS PL.	RET.	8"	6WC	PE	65	REIMB.
27	9	ST. JOHNS PL.	RET.	8"	6WC	CI	35	REIMB.
28	9	7 AVE.	RET.	6"	6WC	ST	58	REIMB.
29	9	7 AVE.	RET.	6"	6WC	ST	38	REIMB.
30	9	7 AVE.	RET.	6"	6WC	ST	56	REIMB.
31	9	ST. JOHNS PL.	RET.	6"	6WC	ST	85	REIMB.
32	9	7 AVE.	RET.	6"	6WC	CI	25	REIMB.
33	10,11	ST. JOHNS PL.	RET.	8"	6WC	PE	540	REIMB.

EPT-27A1

Contract # BED798
Funding Project # CNCC307

ITEM	SHEET	ON STREET	ACTIVITY	SIZE	PRESSURE	MATERIAL	LENGTH IN FT.	REIMB./NON-REIMB.
34	11,12	FLATBUSH AVE.	INST.	8"	6WC	PE	710	REIMB.
35	11,12	FLATBUSH AVE.	RET.	8"	6WC	CI	180	REIMB.
36	11,12	FLATBUSH AVE.	RET.	6"	6WC	CI	153	REIMB.
37	11,13	8 AVE.	RET.	8"	6WC	CI	240	REIMB.
38	11	ST. JOHNS PL.	RET.	8"	6WC	CI	60	REIMB.
39	11	GRAND ARMY PLAZA	RET.	6"	6WC	ST	100	REIMB.
40	11	GRAND ARMY PLAZA	RET.	4"	6WC	CI	90	REIMB.
41	13	8 AVE.	RET.	8"	6WC	ST	85	REIMB.
42	13	8 AVE.	RET.	8"	6WC	CI	80	REIMB.
43	13	LINCOLN PL.	RET.	6"	6WC	CI	35	REIMB.
44	13	LINCOLN PL.	RET.	6"	6WC	PE	40	REIMB.
45	12	FLATBUSH AVE.	RET.	8"	6WC	PE	35	REIMB.
46	12	FLATBUSH AVE.	RET.	8"	6WC	ST	120	REIMB.
47	12	FLATBUSH AVE.	RET.	8"	6WC	CI	123	REIMB.
48	12	FLATBUSH AVE.	RET.	6"	6WC	ST	218	REIMB.
49	12	FLATBUSH AVE.	RET.	6"	6WC	CI	195	REIMB.
50	12	STERLING PL.	RET.	6"	6WC	CI	56	REIMB.
51	12	STERLING PL.	RET.	6"	6WC	ST	30	REIMB.
52	12	FLATBUSH AVE.	RET.	12"	6WC	ST	30	REIMB.
53	14,15,16	DOUGLASS ST.	INST.	24"	15 PSI	ST	1045	REIMB.
54	14	DOUGLASS ST.	INST.	12"	15 PSI	ST	40	REIMB.
55	14,15	DOUGLASS ST.	RET.	24"	15 PSI	ST	195	REIMB.
56	14	DOUGLASS ST.	RET.	12"	15 PSI	ST	50	REIMB.
57	15,16	DOUGLASS ST.	INST.	8"	6WC	PE	1075	REIMB.
58	15,16	DOUGLASS ST.	RET.	24"	15 PSI	CI	470	REIMB.
59	16	DOUGLASS ST.	RET.	8"	6WC	ST	60	REIMB.
60	15,16	DOUGLASS ST.	RET.	8"	6WC	CI	440	REIMB.
61	15	DOUGLASS ST.	RET.	8"	6WC	PE	35	REIMB.
62	16	DOUGLASS ST.	RET.	20"	15 PSI	CI	240	REIMB.
63	16	4 AVE.	RET.	8"	6WC	CI	160	REIMB.
64	16	DOUGLASS ST.	RET.	8"	6WC	CI	172	REIMB.
65	16	4 AVE.	RET.	6"	6WC	PE	120	REIMB.
66	17	6 AVE.	RET.	8"	6WC	PE	50	REIMB.
67	17	6 AVE.	INST.	8"	6WC	PE	60	REIMB.

EP7-27A2

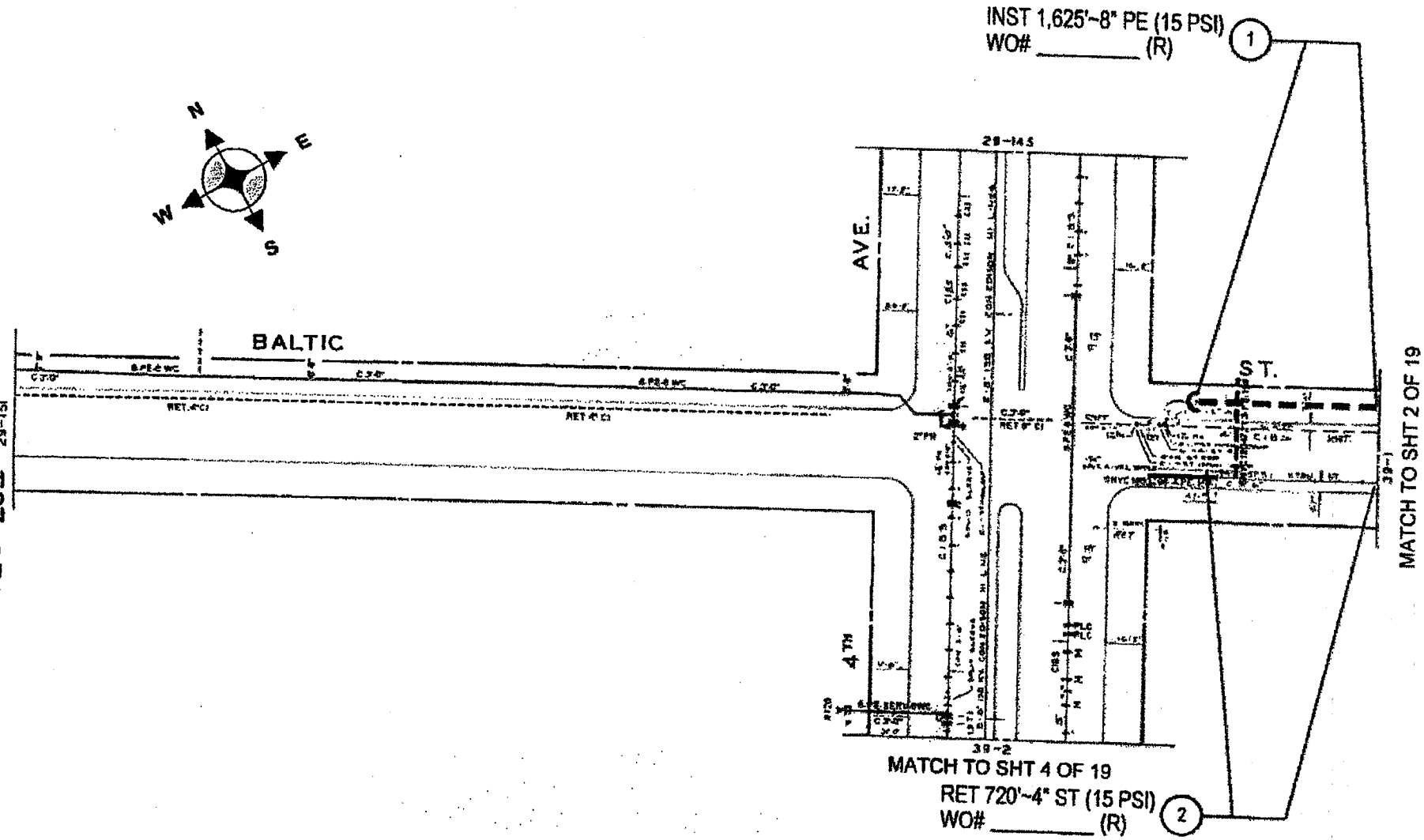

EPT-27A3

nationalgrid

BED798

CNCC307	ID-29-152 SHT 1 OF 19

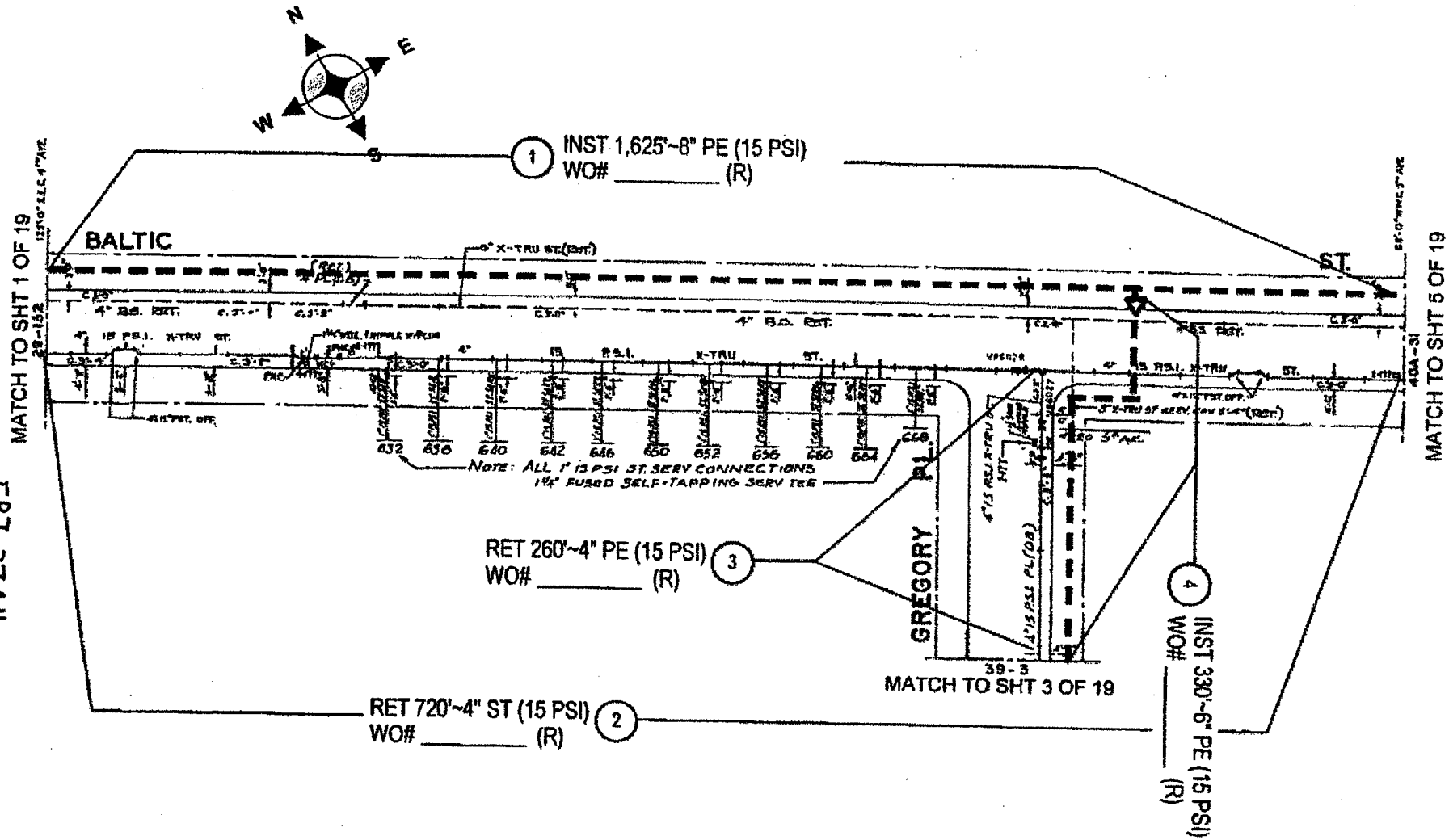

EPT-27A4

nationalgrid

BED798

CNCC307	ID-39-1 SHT 2 OF 19

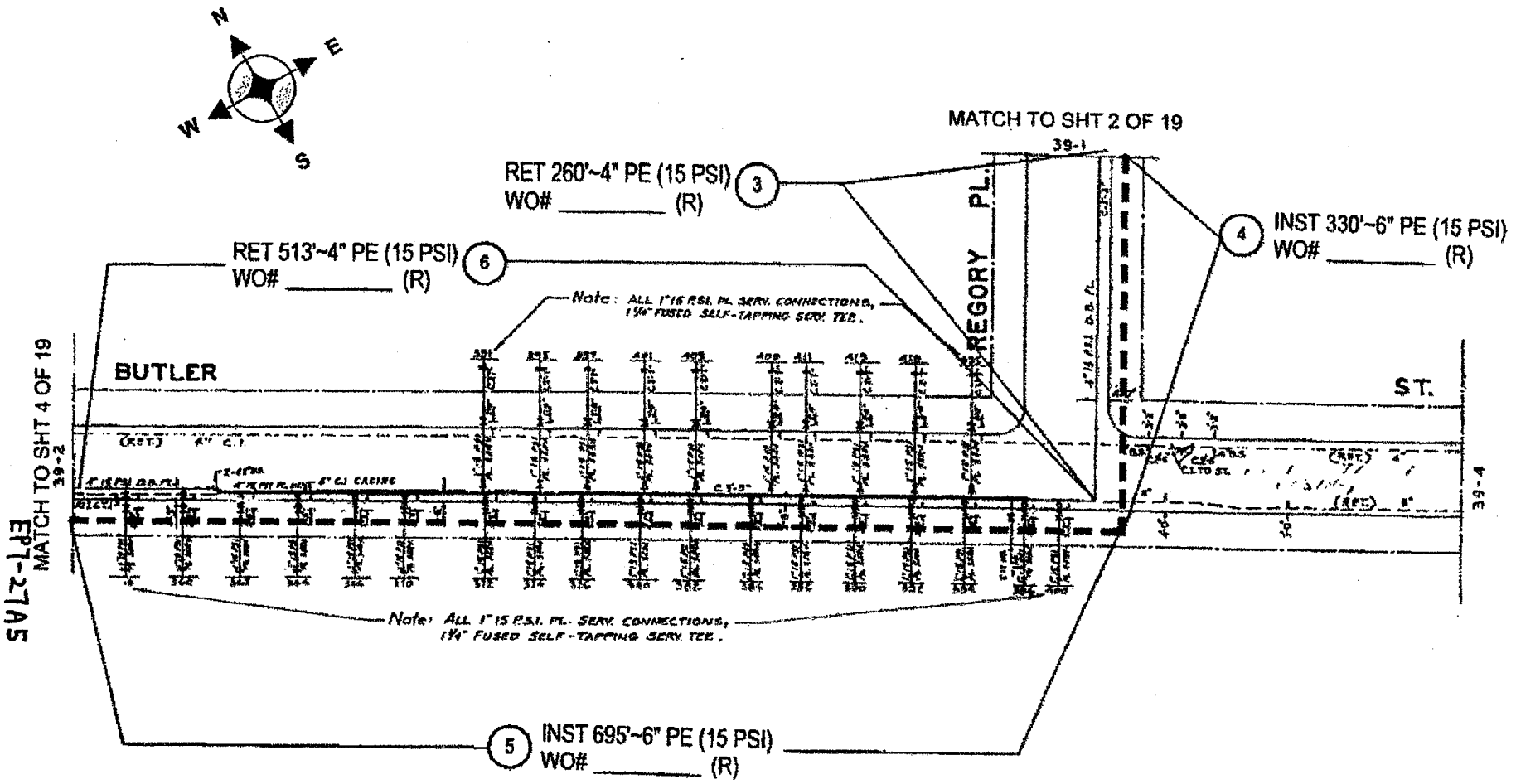

EP1-27A5

nationalgrid

BED798

CNCC307	ID-39-3 SHT 3 OF 19

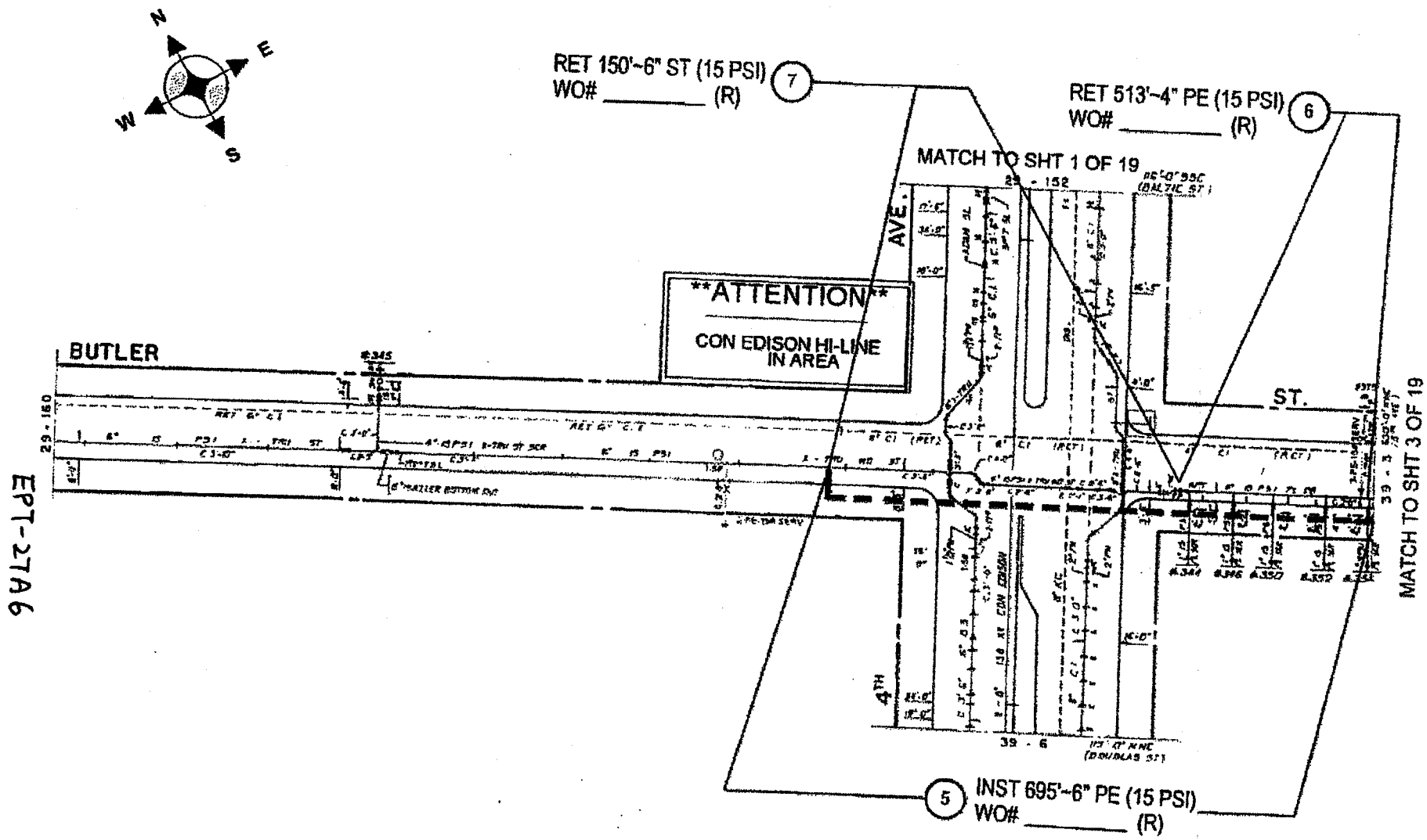

EPT-27A6

nationalgrid

BED798

CNCC307	ID-39-2 SHT 4 OF 19

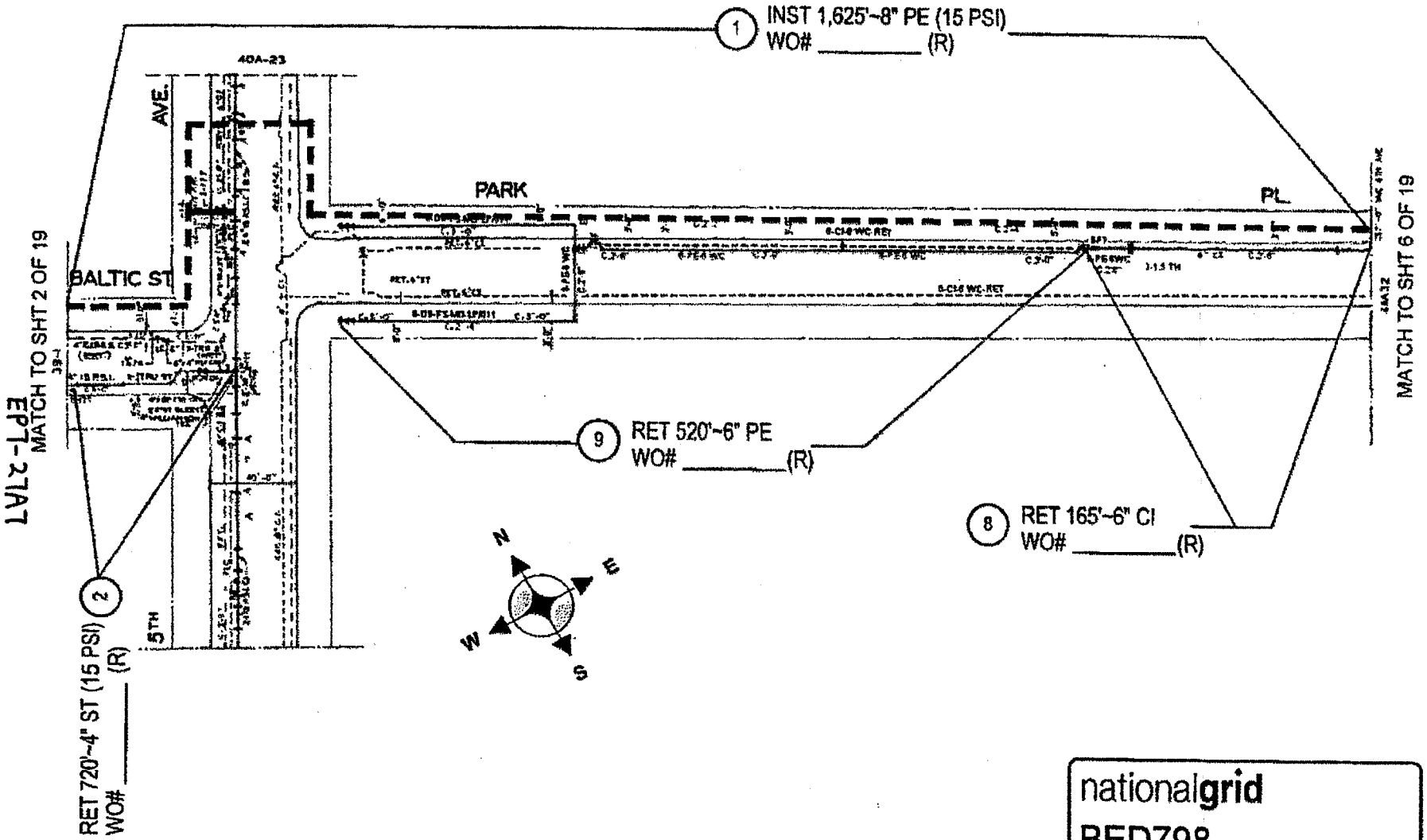

EPT-27A7

nationalgrid
BED798

CNCC307	ID-40A-31 SHT 5 OF 19

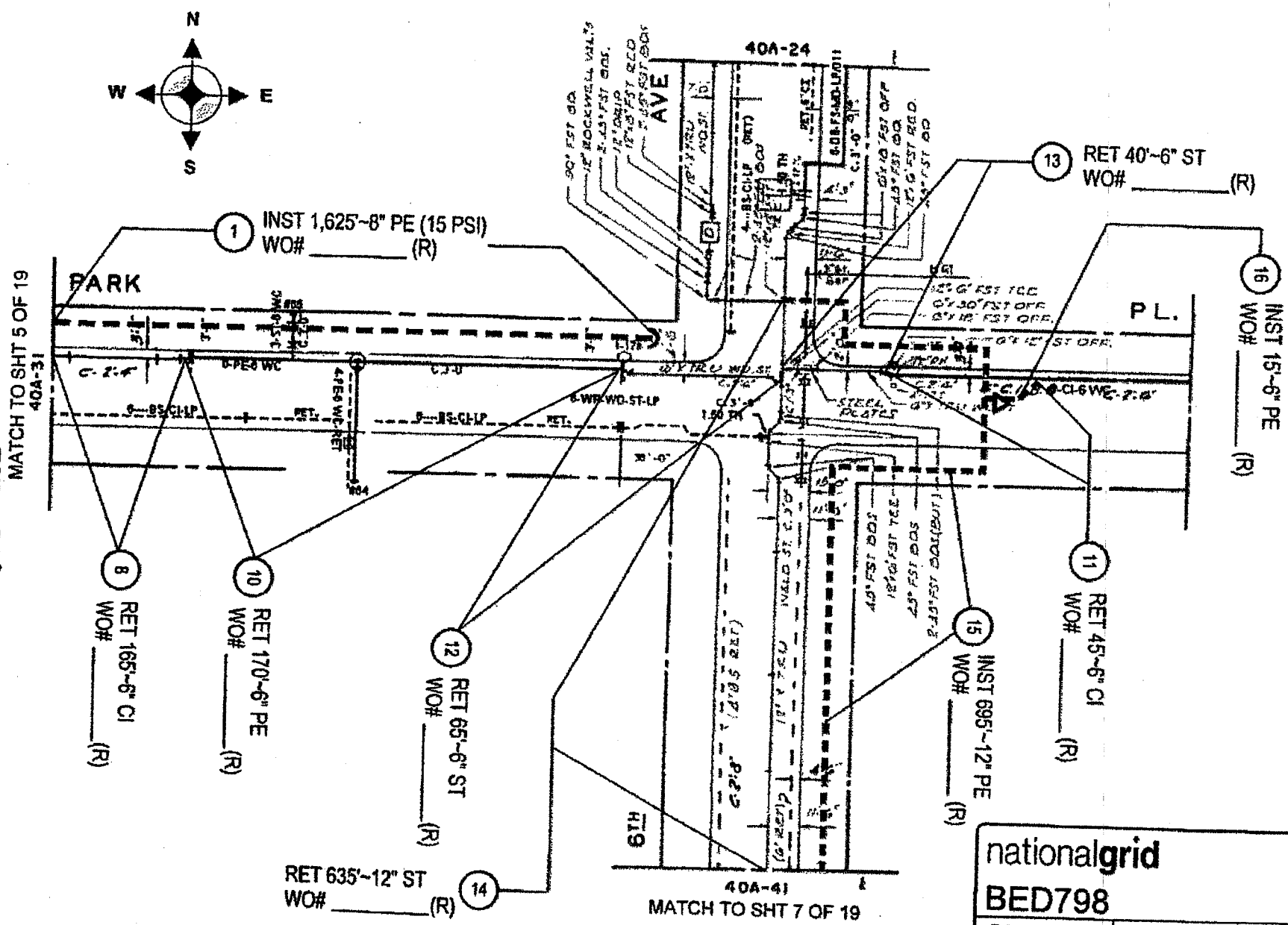
N
W
E
S
PARK
AVE
PL.
6TH
40A-24
40A-31
40A-41
MATCH TO SHT 5 OF 19
MATCH TO SHT 7 OF 19
1 INST 1,625'~8" PE (15 PSI) WO# _____ (R)
8 RET 165'~6" CI WO# _____ (R)
10 RET 170'~6" PE WO# _____ (R)
12 RET 65'~6" ST WO# _____ (R)
13 RET 40'~6" ST WO# _____ (R)
14 RET 635'~12" ST WO# _____ (R)
15 INST 695'~12" PE WO# _____ (R)
16 INST 15'~6" PE WO# _____ (R)
11 RET 45'~6" CI WO# _____ (R)
nationalgrid
BED798
CNCC307
ID-40A-32
SHT 6 OF 19

EPT-27A8

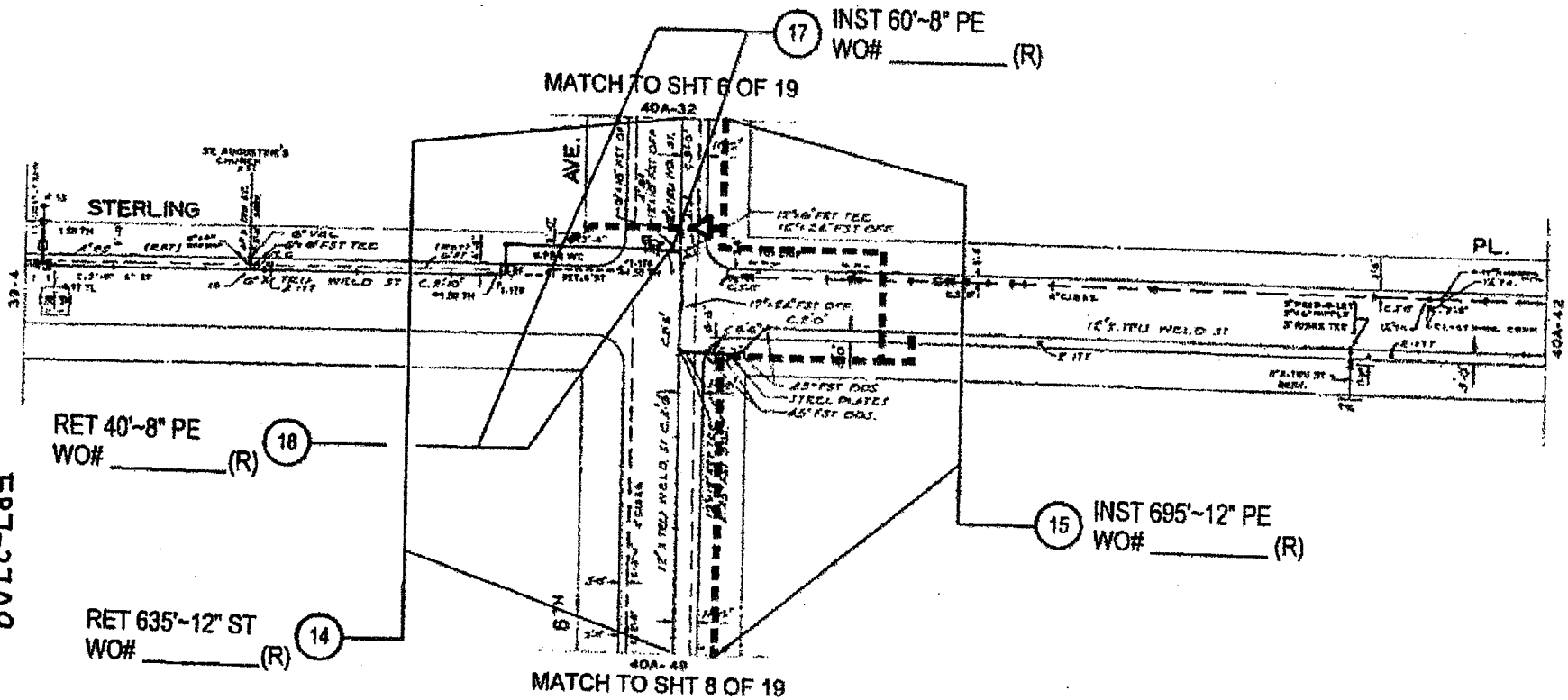

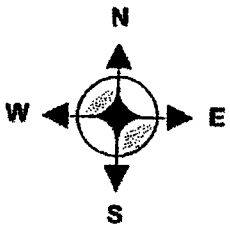

EP7-27A9

nationalgrid
BED798

CNCC307	ID-40A-41 SHT 7 OF 19

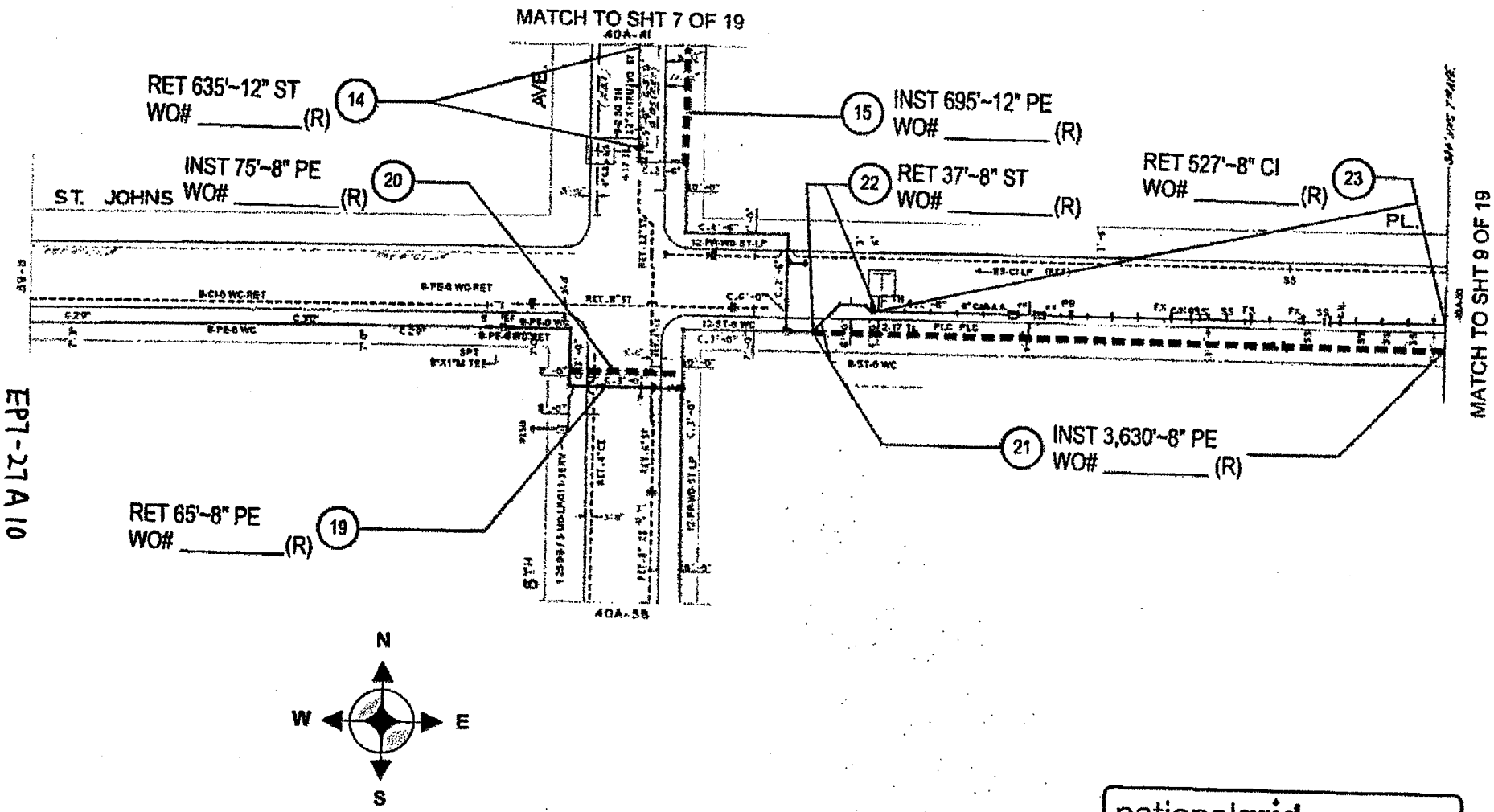

EPT-27A 10

nationalgrid

BED798

CNCC307	ID-40A-49 SHT 8 OF 19

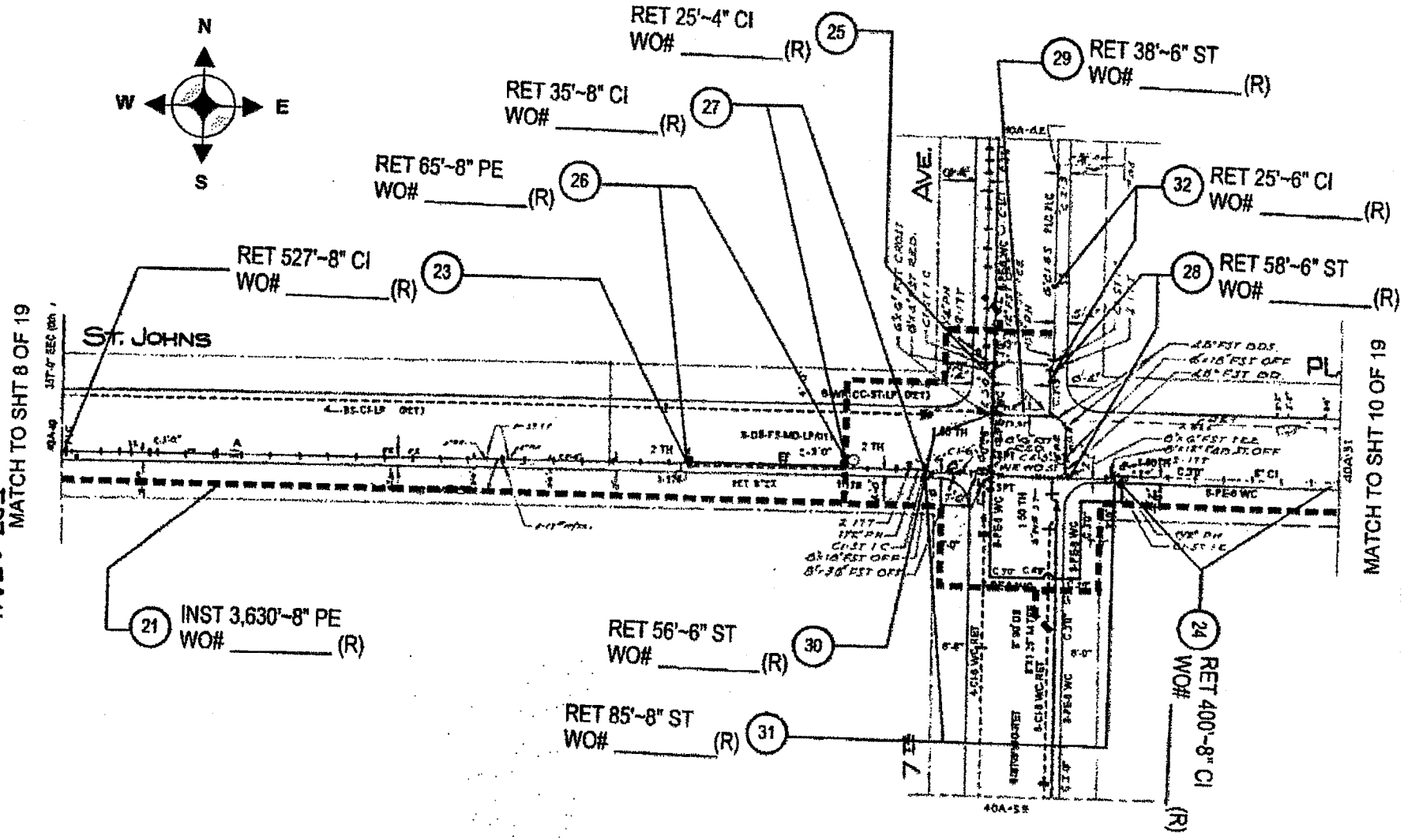

EPT-27AII

nationalgrid

BED798

CNCC307	ID-40A-50 SHT 9 OF 19

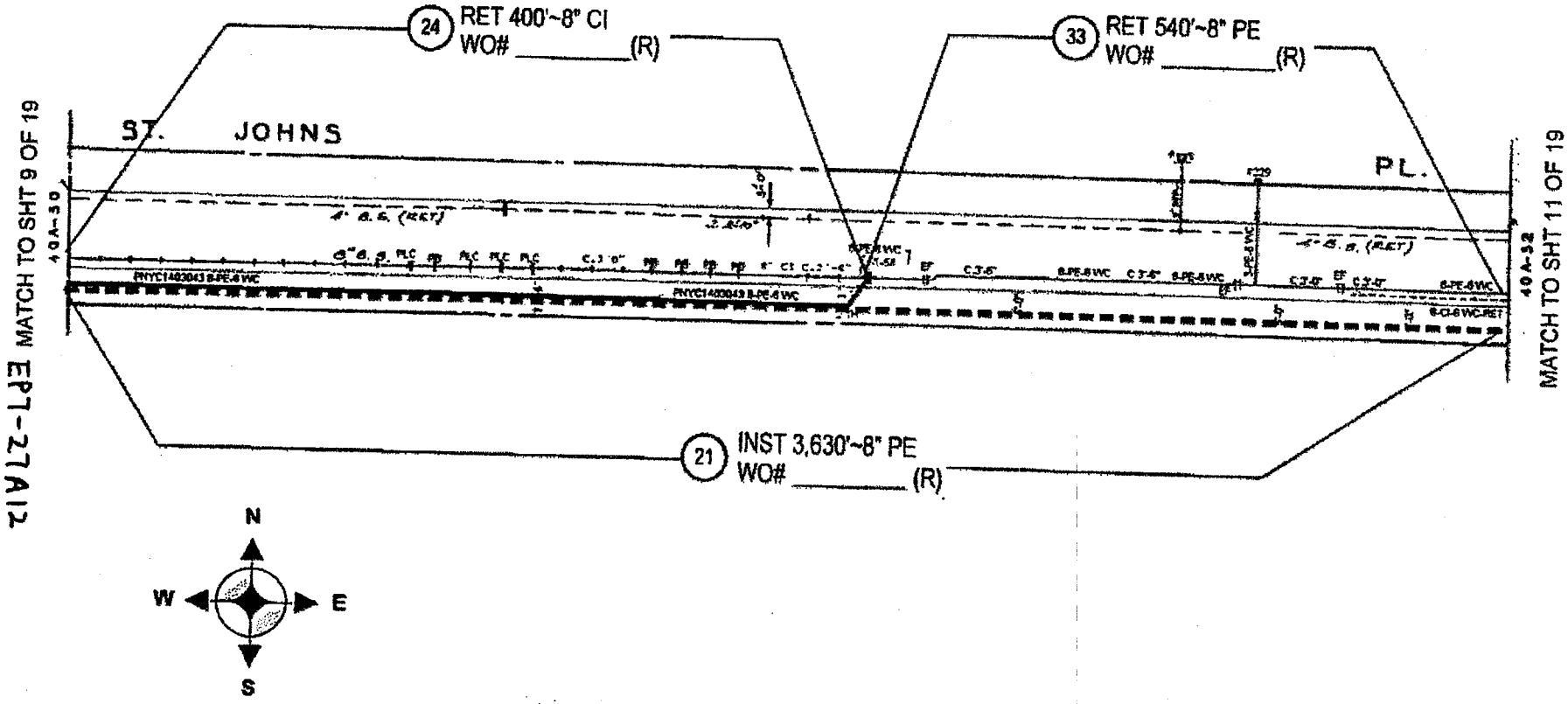

nationalgrid

BED798

CNCC307	ID-40A-51 SHT 10 OF 19

EP7-27A12

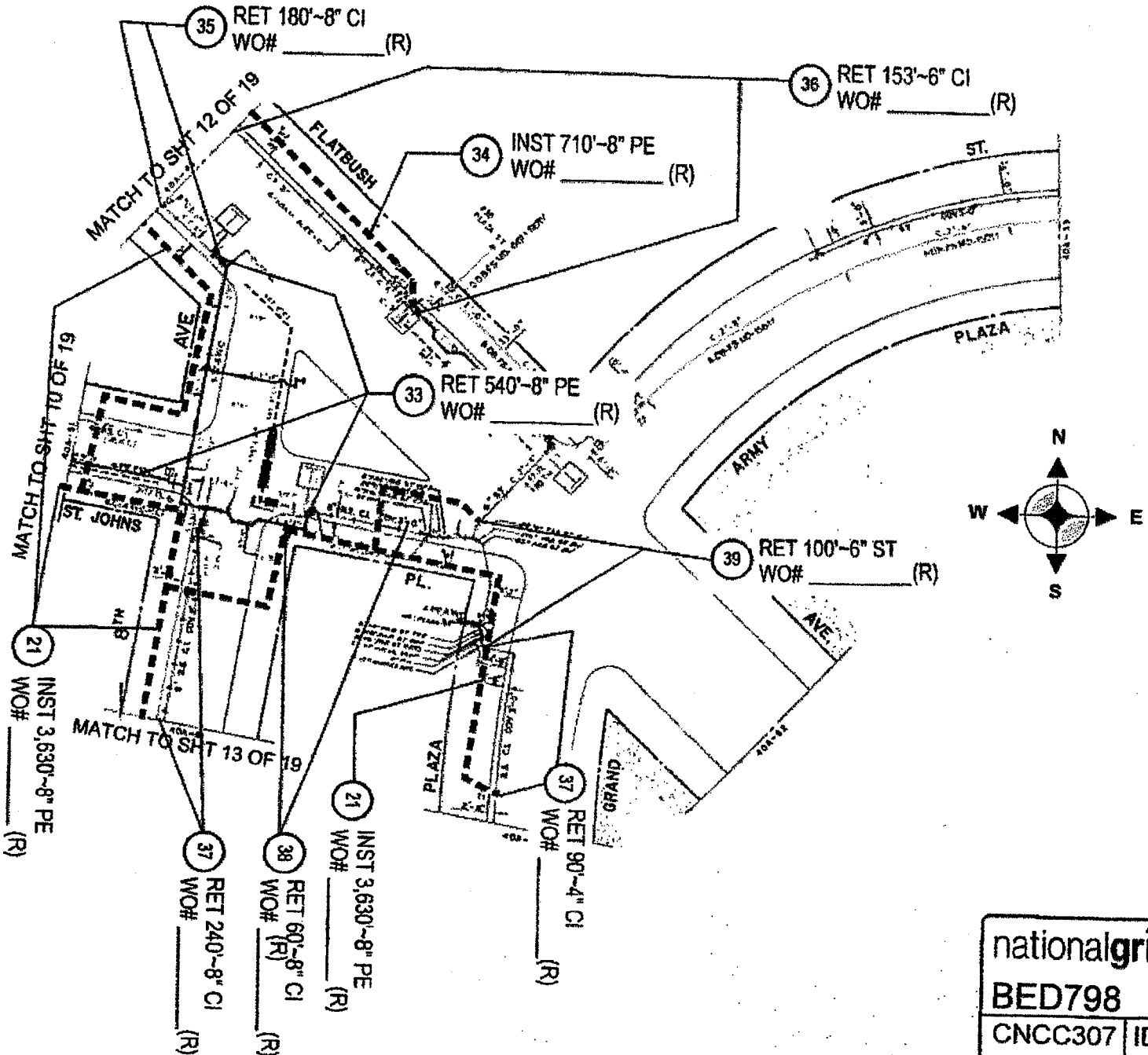

EPT-27A13

nationalgrid
BED798
CNCC307 | ID-40A-52
SHT 11 OF 19

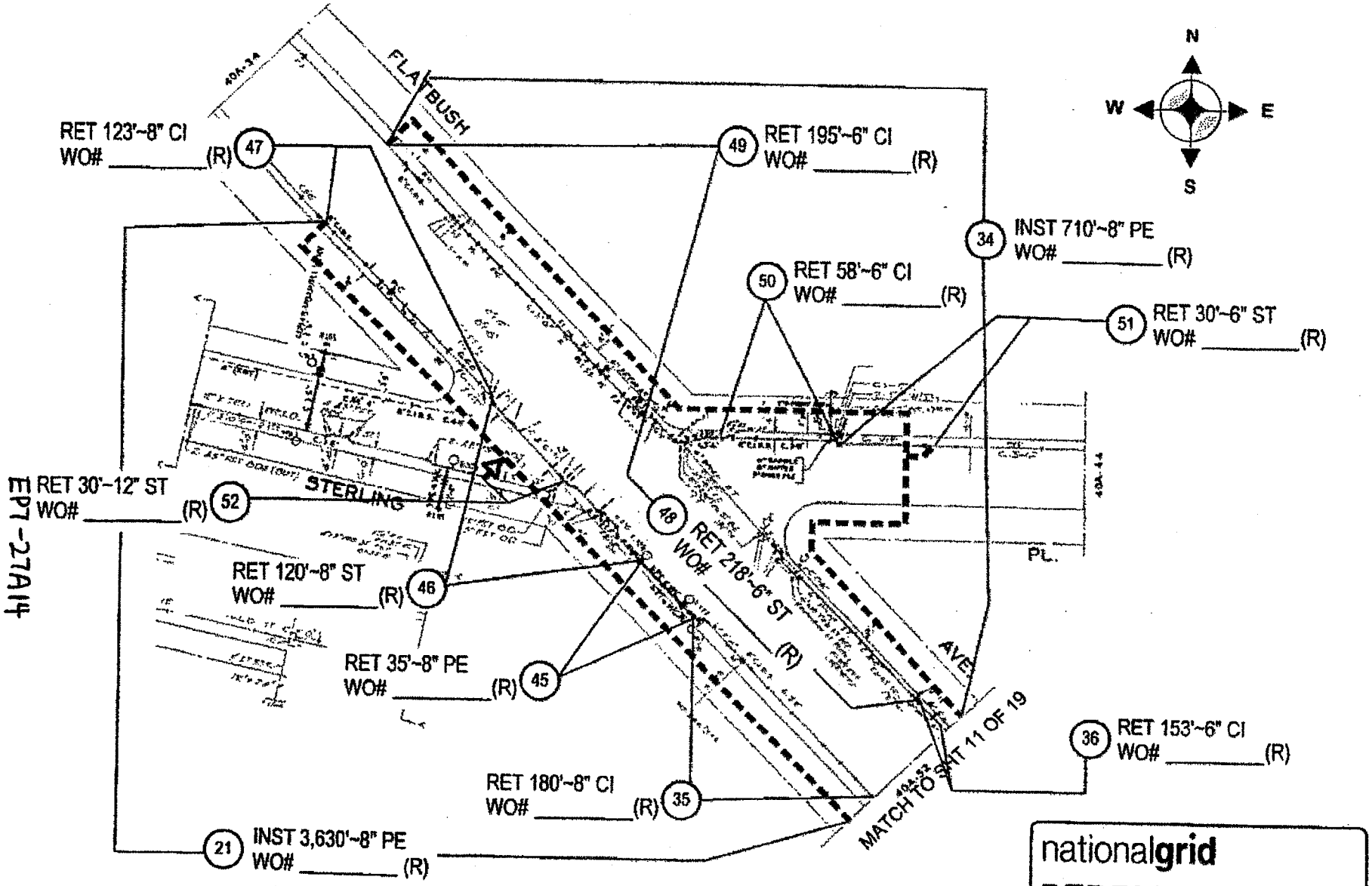

EP7-27A14

nationalgrid

BED798

CNCC307	ID-40A-53 SHT 12 OF 19

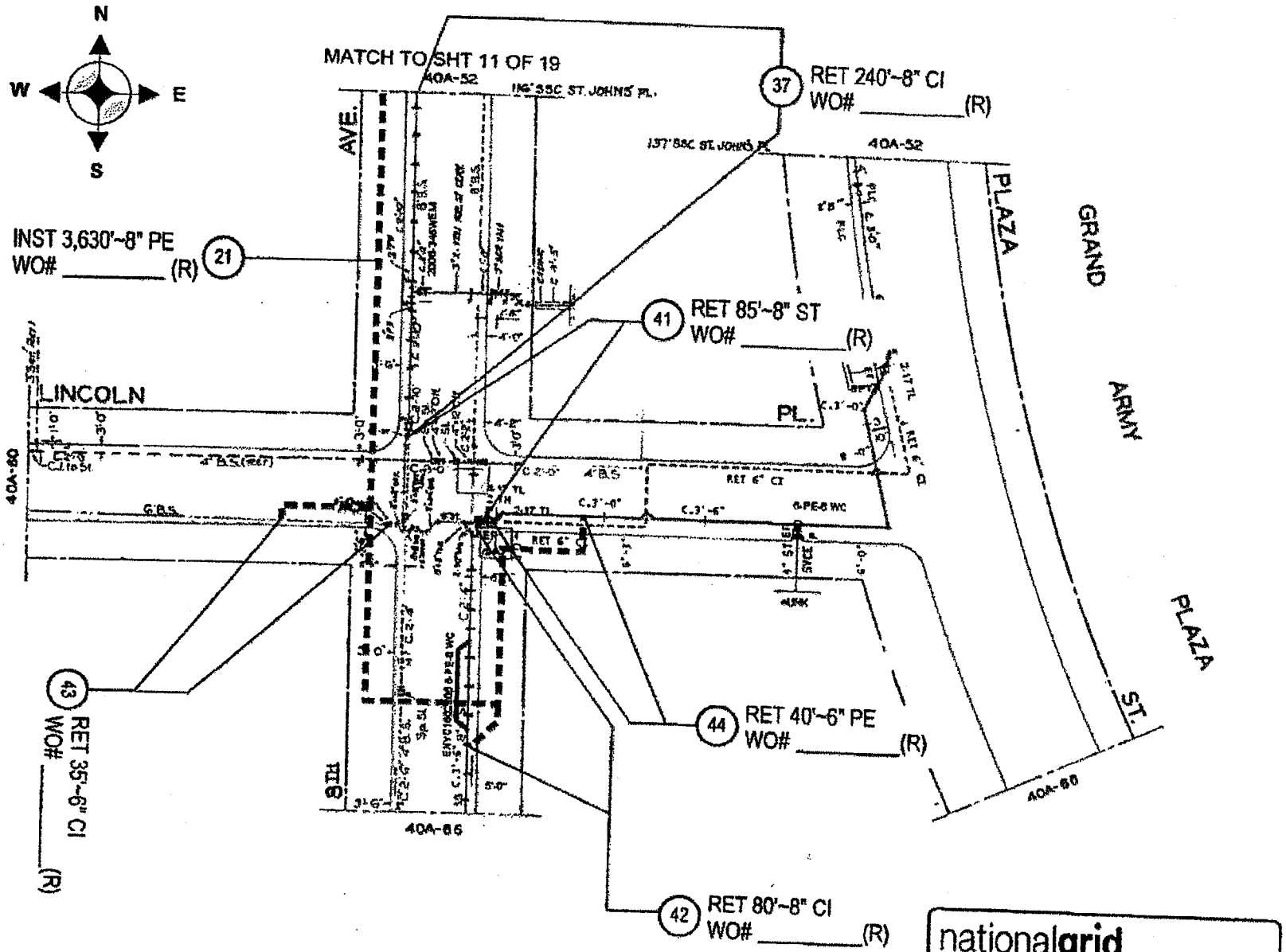

nationalgrid

BED798

CNCC307	ID-40A-61 SHT 13 OF 19

EPT-27A15

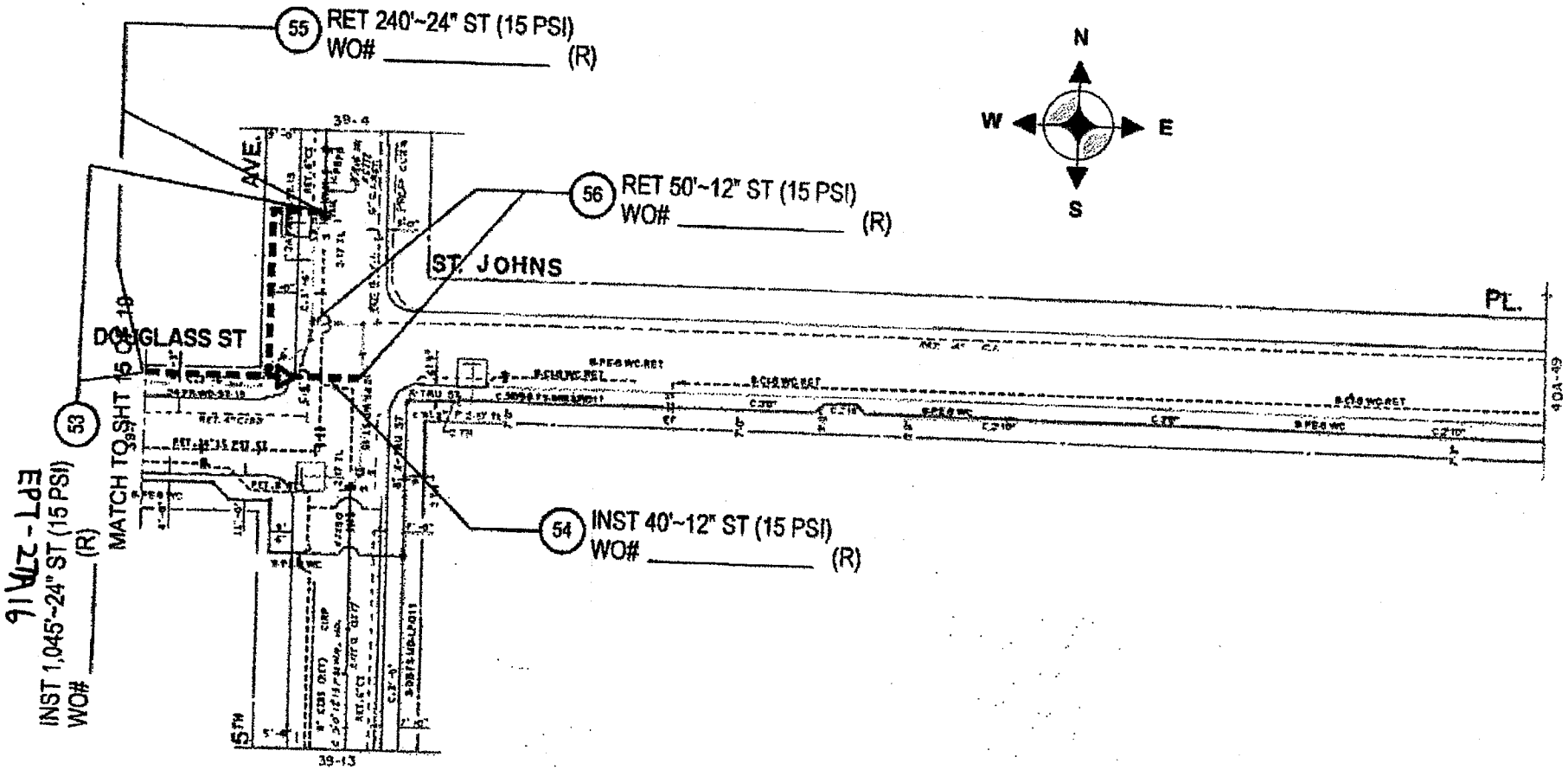

nationalgrid
BED798
CNCC307 | ID-39-8
SHT 14 OF 19

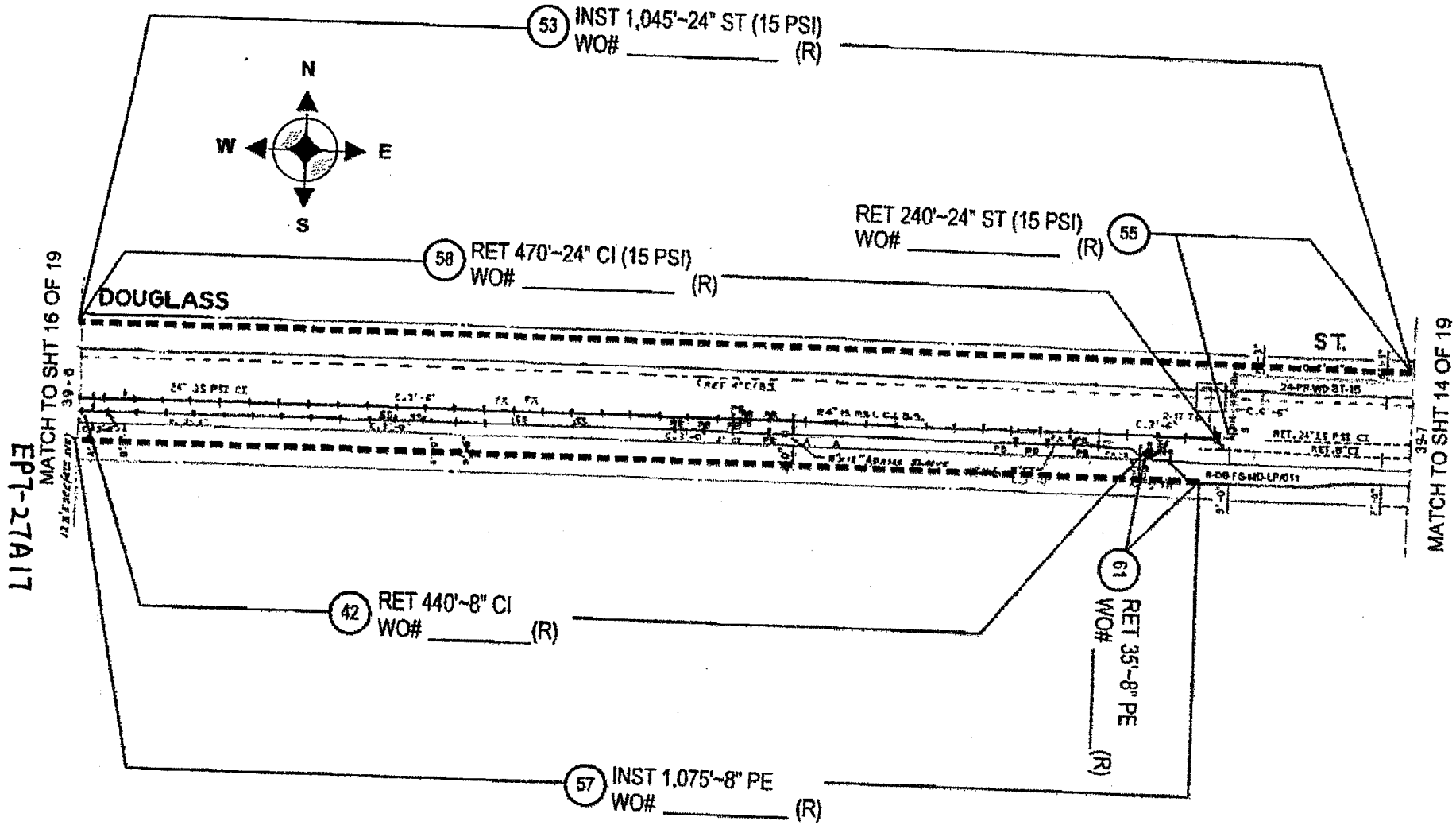

nationalgrid

BED798

CNCC307	ID-39-7 SHT 15 OF 19

EPT-27A17

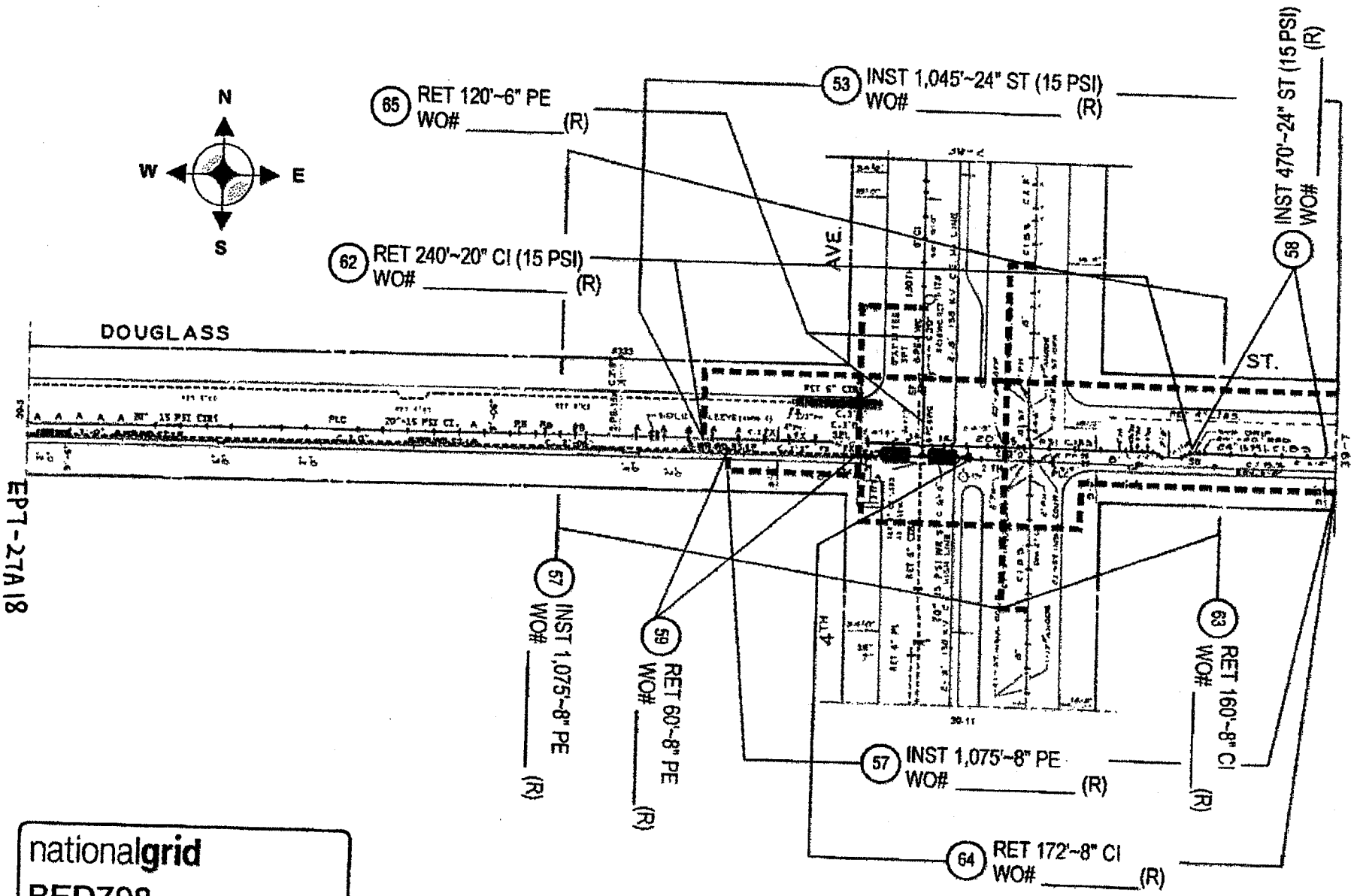

EPT-27A18

nationalgrid

BED798

CNCC307	ID-39-6 SHT 16 OF 19

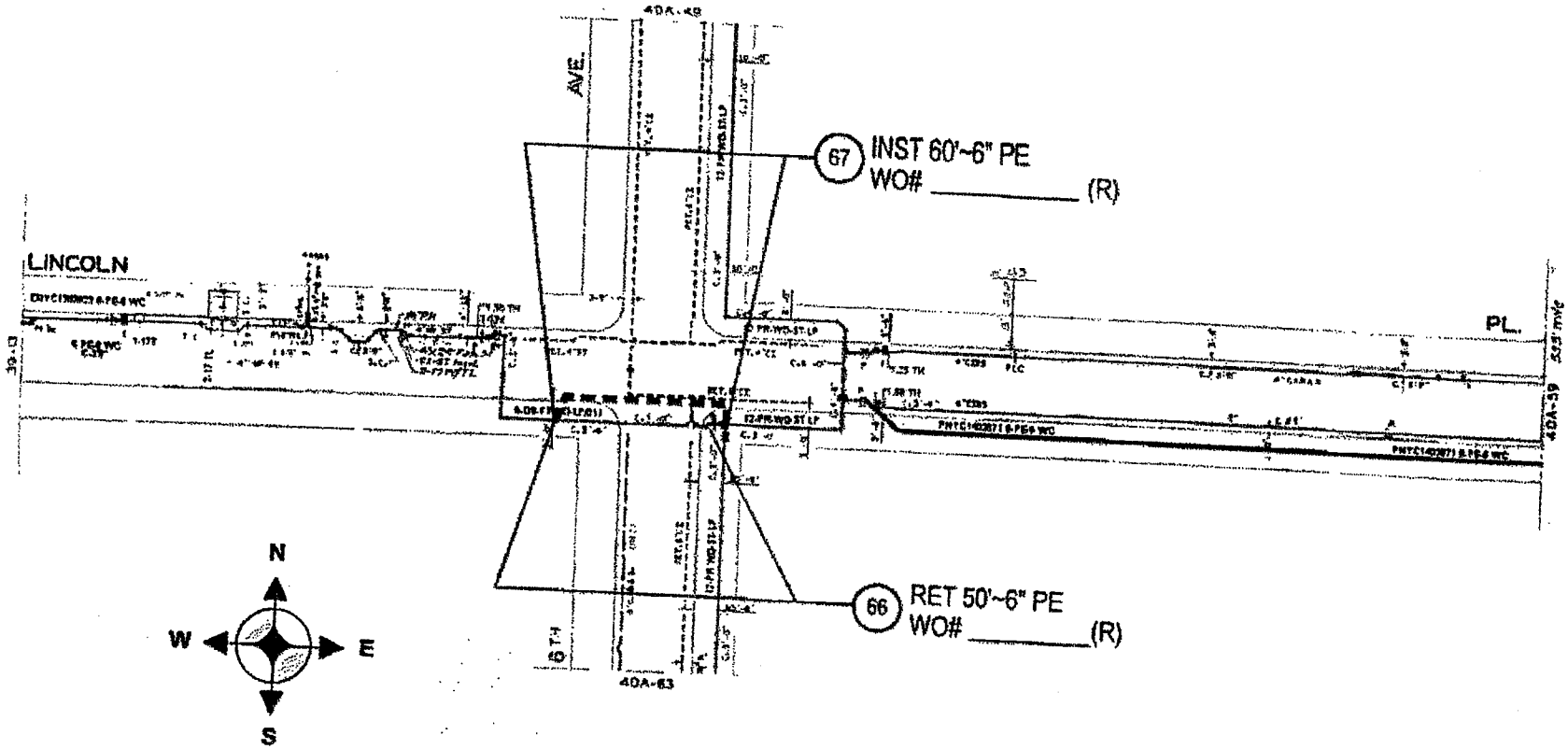

EP7-27A19

nationalgrid
BED798
CNCC307 | ID-40A-58
SHT 17 OF 19

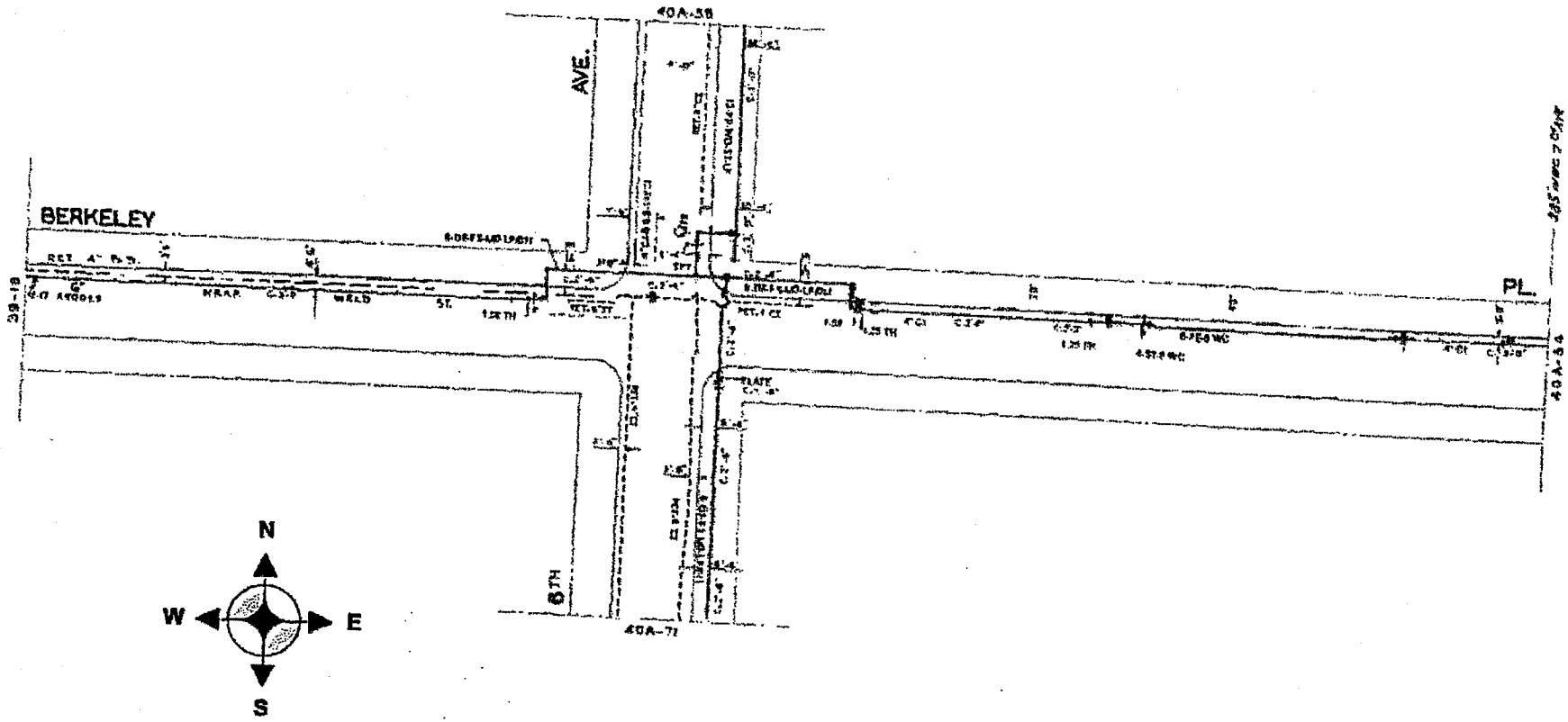

EPT-27A20

nationalgrid

BED798

CNCC307	ID-40A-63 SHT 18 OF 19

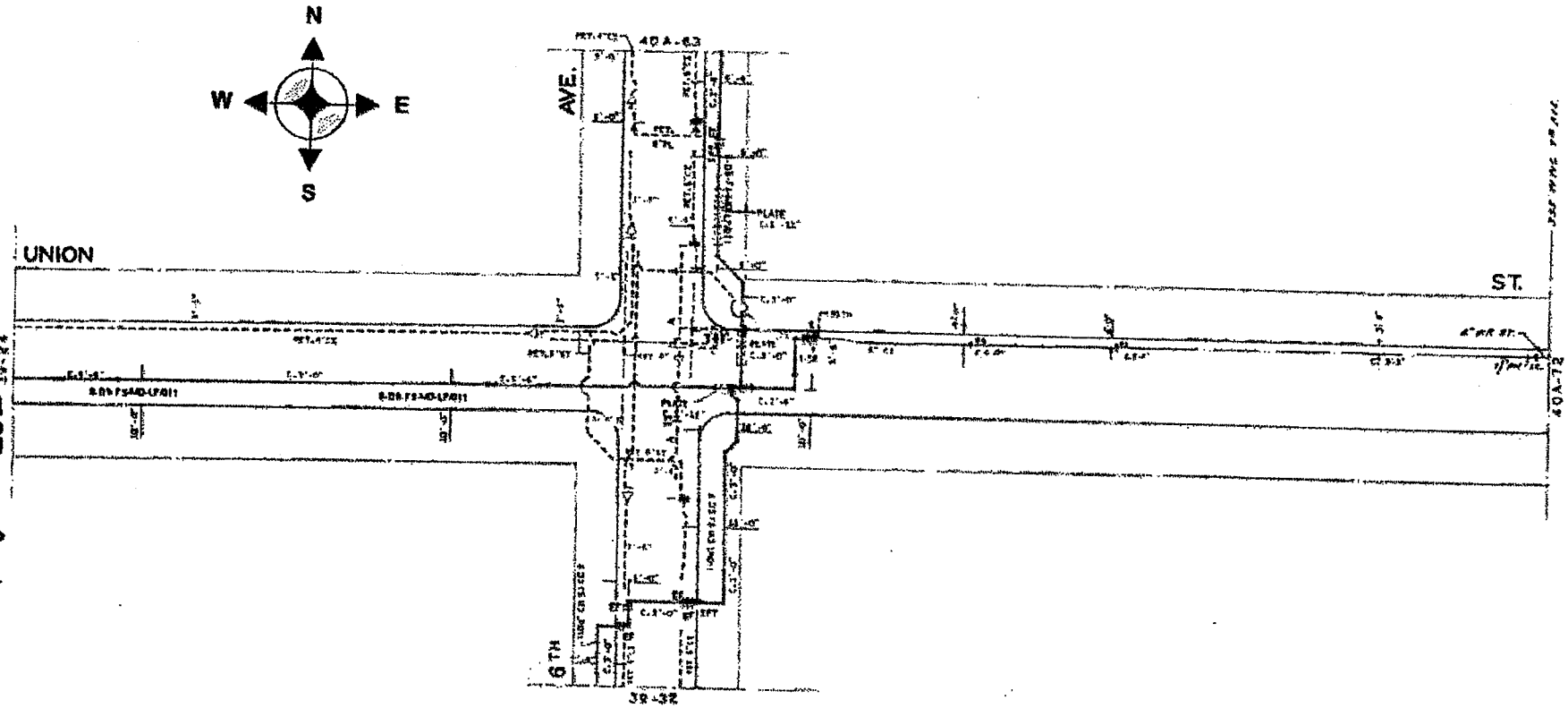

EPT-27A21

nationalgrid
BED798

CNCC307	ID-40A-71 SHT 19 OF 19

VI - LISTING OF APPROXIMATE LOCATIONS OF EP-7 BID ITEMS QUANTITIES.

(NO TEXT IN THIS AREA, TURN PAGE)

SCOPE OF WORK
SUPPORT AND PROTECTION
FOR CONTRACT BED-798

The City of New York Department of Design and Construction is proposing to install sewers and/or water mains and all appurtenances in various locations in The City of New York along with all work incidental thereto.

6.01.1 - Gas Main Crossing Sewer Up To 24" In Diameter. (Ea.)

1 in 5 Ave @ St. Johns Pl.
1 in St. Johns Pl bet 7 Ave & 8 Ave.
1 in 5 Ave @ Park Pl.
1 in 8 Ave bet St. Johns Pl & Lincoln Pl.

6.01.2 - Gas Main Crossing Sewer 30" In Diameter. (Ea.)

2 in St. Johns Pl bet 6 Ave & 7 Ave.

6.01.4 - Gas Main Crossing Sewer 48" Thru 54" In Diameter. (Ea.)

1 in 6 Ave bet Park Pl & Sterling Pl.

6.01.4Q - Gas Main Crossing 4'- 0"W x 5'- 0"H F.T.R.C. Combined Sewer. (Ea.)

2 in 6 Ave bet Lincoln Pl & Berkeley Pl.

6.01.4R - Gas Main Crossing 4'- 6"W x 5' - 0"H F.T.R.C. Combined Sewer. (Ea.)

1 in 6 Ave @ St. Johns Pl.

6.01.8 - Gas Services Crossing Trenches And /Or Excavations. (Ea.)

210 in Various Locations as Required.

SCOPE OF WORK
SUPPORT AND PROTECTION
FOR CONTRACT BED-798

The City of New York Department of Design and Construction is proposing to install sewers and/or water mains and all appurtenances in various locations in The City of New York along with all work incidental thereto.

6.01.9 - Gas Main Crossing Water Main Up To 20" In Diameter. (Ea.)

1 in St. Johns Pl bet 7 Ave & 8 Ave.
1 in Baltic St bet Gregory Pl & 5 Ave.
2 in 6 Ave @ Berkeley Pl.
2 in 8 Ave bet St. Johns Pl & Lincoln Pl.
1 in Baltic St @ 4 Ave.
1 in Bulter St @ 4 Ave.
3 in Sterling Pl @ Flatbush Ave.
2 in 8 Ave bet Flatbush Ave & St. Johns Pl.

6.01.14 - Gas Main Crossing Water Main 72" In Diameter. (Ea.)

1 in 6 Ave bet Park Pl & Sterling Pl.
1 in Sterling Pl @ Flatbush Ave.
1 in St. Johns Pl bet 7 Ave & 8 Ave.
1 in St. Johns Pl bet 6 Ave & 7 Ave.
2 in 6 Ave bet Lincoln Pl & Berkeley Pl.
1 in 6 Ave bet St. Johns Pl & Lincoln Pl.
1 in St. Johns Pl @ 7 Ave.
1 in 8 Ave bet St. Johns Pl & Lincoln Pl.
2 in 8 Ave bet Flatbush Ave & St. Johns Pl.

6.03 - Removal Of Abandoned Gas Facilities. All Sizes. (L.F.)

7500 in Various Locations as Required.

6.03.1 - Removal Of Abandoned Gas Facilities With Possible Coal Tar Wrap. All Sizes.(L.F.)
(For National Grid Work Only)

400 in Various Locations as Required.

EPT-28 A2

SCOPE OF WORK
SUPPORT AND PROTECTION
FOR CONTRACT BED-798

The City of New York Department of Design and Construction is proposing to install sewers and/or water mains and all appurtenances in various locations in The City of New York along with all work incidental thereto.

6.04 - Adjust Hardware To Grade Using Spacer Rings/Adaptors (Street Repaving). (Ea.)

25 in Various Locations as Required.

6.05 - Adjust Hardware To Grade By Resetting (Road Reconstruction). (Ea.)

40 in Various Locations as Required.

6.06 - Special Care Excavation And Backfilling. (C.Y.)

4500 in various locations as required, including but not limited to all gas services crossing unsheeted water main trenches.

6.07 - Test Pits For Gas Facilities. (C.Y.)

100 in Various Locations as Required.

HAZ - PAGES

SPECIFICATIONS FOR HANDLING, TRANSPORTATION AND DISPOSAL OF NONHAZARDOUS AND POTENTIALLY HAZARDOUS CONTAMINATED MATERIALS

NOTICE

THE PAGES CONTAINED IN THIS SECTION ARE ISSUED FOR THE PURPOSE OF SPECIFYING THE REQUIREMENTS OF THE CONTRACT DOCUMENTS AND HEREBY MADE PART OF SAID CONTRACT DOCUMENTS.

(NO TEXT ON THIS PAGE)

SPECIFICATIONS FOR HANDLING, TRANSPORTATION AND DISPOSAL OF NON-HAZARDOUS AND POTENTIALLY HAZARDOUS CONTAMINATED MATERIALS

72" REPLACEMEMNT IN FLATBUSH AVENUE BETWEEN STERLING PLACE AND 8TH, ETC. (WITH COMBINED SEWER REPLACEMENT)

BOROUGH OF BROOKLYN
CITY OF NEW YORK

Capital Project ID: BED798

Prepared By:

Department of Design and Construction

30-30 Thomson Avenue, 3rd Floor
Long Island City, New York 11101

November 17, 2016

Table of Contents

ITEM 8.01 C1 HANDLING, TRANSPORTING, & DISPOSAL OF NON-HAZARDOUS CONTAMINATED SOILS ..... HAZ. - 1

ITEM 8.01 C2 SAMPLING AND TESTING OF CONTAMINATED/ POTENTIALLY HAZARDOUS SOIL FOR DISPOSAL PARAMETERS ..... HAZ. - 7

ITEM 8.01 H HANDLING, TRANSPORTING, AND DISPOSAL OF HAZARDOUS SOILS ..... HAZ. - 9

ITEM 8.01 S HEALTH AND SAFETY ..... HAZ. - 14

ITEM 8.01 W1 REMOVAL, TREATMENT, AND DISCHARGE/DISPOSAL OF CONTAMINATED WATER ..... HAZ. - 19

ITEM 8.01 W2 SAMPLING AND TESTING OF CONTAMINATED WATER ..... HAZ. - 25

ATTACHMENT 1: NYCDEP LIMITATIONS FOR DISCHARGE TO STORM, SANITARY/COMBINED SEWER ..... HAZ. - 28

ATTACHMENT 2: APPLICABLE REGULATIONS ..... HAZ. - 31

ATTACHMENT 3: DEFINITIONS ..... HAZ. - 34

ATTACHMENT 4: PHASE II SUBSURFACE CORRIDOR INVESTIGATION REPORT ..... HAZ. - 36

ITEM 8.01 C1 HANDLING, TRANSPORTING, & DISPOSAL OF NON-HAZARDOUS CONTAMINATED SOILS

8.01 C1.1 WORK TO INCLUDE

General: This work shall consist of the handling, transportation and disposal of non-hazardous contaminated soils. The materials covered by this specification are soils that are contaminated with petroleum or chemical products but cannot be classified as hazardous waste. For the purpose of this specification, soil shall be defined as any material excavated below the pavement and base for pavement.

Non-hazardous contaminated soils are defined as soils exhibiting one or more of the following characteristics:

- Elevated Photo-Ionization Detector (PID) readings, subsequently confirmed by lab analysis
- Visual evidence of contamination
- Petroleum and/or chemical odors
- Soils that have been documented as contaminated in previous environmental reports

Non-hazardous contaminated soils must be stockpiled at an off-site approved location or secured on-site by the Contractor, meeting all required Federal, State and Local stipulations. Sampling and laboratory analysis must be conducted to determine if the soils are hazardous, unless the alternative procedure as defined under subsection 8.01 C1.1 A.5 has been agreed upon by treatment facilities. Contaminated soils determined to be non-hazardous shall be handled in accordance with the specifications herein for Item 8.01 C1. Contaminated soils determined to be hazardous shall be handled in accordance with the specifications for Item 8.01 H – Handling, Transporting and Disposal of Hazardous Soils.

The Contractor shall retain the services of an independent Environmental Consultant, as specified under Item 8.01 S – Health and Safety, to oversee the work required under this Item.

Non-hazardous soils shall be delivered to the disposal or treatment facility within thirty (30) calendar days after excavation.

The Contractor shall conduct sampling and analysis of the impacted soils as specified under Item 8.01 C2 – Sampling and Testing of Contaminated/Potentially Hazardous Soils for Disposal Parameters. The laboratory results shall be forwarded to DDC Program Management, Office of Environmental and Geotechnical Services (OEGS) for review to determine if the soils will be handled and disposed of as contaminated regulated soils or hazardous waste. No other soils shall be sampled or tested without the DDC's approval or direction.

The Contractor shall ensure that all operations associated with the handling, sampling, loading, transportation, and disposal of non-hazardous contaminated soils are in compliance with all applicable Federal, State, and City statutes and regulations.

The Contractor shall document the excavation, handling, transportation and disposal of non-hazardous contaminated soils. The Contractor shall supply all equipment, material and labor required to conduct the specified work of this Item.

A. Material Handling Plan: Within forty-five (45) calendar days after award of Contract, the Contractor shall submit to the Program Management, OEGS for review, a Material Handling Plan (MHP). The MHP must be approved by the Program Management, OEGS, prior to the Contractor's commencement of work. The MHP shall, at a minimum, consist of:

1. The Contractor's procedures for identifying non-hazardous contaminated soils during excavation, including the specific model and manufacturer of intended organic vapor monitoring equipment and calibration procedures to be used. It should also include the training and experience of the personnel who will operate the equipment.
2. The Contractor's procedures for safely handling non-hazardous contaminated soils. The procedures must include personnel safety and health as well as environmental protection considerations.
3. Name, address, New York State Department of Health's (DOH) Environmental Laboratories Accreditation Program (ELAP) status and telephone number of the proposed laboratory for analysis of representative soil samples. The ELAP for the intended analysis must approve the laboratory.
4. Identification of the Contractor's proposed waste transporter(s). This information shall include:

    a. Name and Waste Transporter Permit Number

    b. Address

    c. Name of responsible contact for the hauler

    d. Telephone number for the contact

    e. Any and all necessary permit authorizations for each type of waste transported

    f. Previous experience in performing the type of work specified herein
5. All staging/stockpiling areas (if stockpiling areas are intended and available), or alternate procedures that will be used. Alternate procedures may include, but are not limited to, agreements from the intended disposal or treatment facilities to accept boring data and/or analytical data previously obtained during the site characterization so that materials may be directly loaded into vehicles for shipment to the disposal facility.
6. A backup facility should the staging/stockpile areas become unavailable, insufficient in area or not be present by some other unforeseen difficulty.
7. Identification of the Contractor's two proposed Treatment Storage or Disposal (TSD) facilities for non-hazardous contaminated soils (primary and back-up) for final disposal of the soils. The primary TSD shall be an approved soil recycling/treatment facility. The backup facility may be a recycling/treatment facility or a New York State Department of Environmental Conservation (DEC) approved lined landfill or other facility approved by DEC to accept this material. The information required for each facility shall include:

    a. Facility name and the State identification number

        (1) Facility location

        (2) Name of responsible contact for the facility

        (3) Telephone number for contact

        (4) Signed letter of agreement to accept waste as specified in this contract

        (5) Unit of measure utilized at facility for costing purposes

    b. A listing of all permits, licenses, letters of approval, and other authorizations to operate, which are currently held and valid for the proposed facility.

c. A listing of all permits, licenses, letters of approval, and other authorizations to operate which have been applied for by the proposed facility but not yet granted or issued.

d. The Contractor shall specify and describe the disposal/containment unit(s) that the proposed facility will use to manage the waste. The Contractor shall identify the capacity available in the units and the capacity reserved for the subject waste.

e. The Contractor shall provide the date of the proposed facility's last compliance inspection.

f. A list of all active (unresolved) compliance orders (or agreements), enforcement notices, or notices of violations issued to the proposed facility shall be provided. The source and nature of the cause of violation shall be stated, if known.

8. Description of all sampling and field/laboratory analyses that will be needed to obtain disposal facility approval.

8.01 C1.2 MATERIALS

A. Containers shall be as required in the United State Department of Transportation (DOT) regulations.

B. Polyethylene to be placed under (20 mil. thickness minimum) and over (10 mil. thickness minimum) soil piles.

C. The Contractor shall assure that the waste hauler's appropriate choice of vehicles and operating practices shall prevent spillage or leakage of contaminated material from occurring en route.

D. The Contractor shall provide, install and maintain any temporary loading facilities on site as required until completion of material handling activities. The location and design of any facilities shall be included in the MHP and be approved by the Program Management, OEGS.

8.01 C1.3 CONSTRUCTION DETAILS

A. Material Handling

1. Immediately after excavation of non-hazardous contaminated soil the Contractor shall:

   a. Load material directly onto trucks/tankers/roll offs for disposal off site; or

   b. If interim stockpiling is required, place on a minimum of 20 mil. or equivalent plastic ground cloth and cover by minimum of 10 mil. polyethylene sheeting or equivalent to protect against leaching or runoff of contaminants into groundwater or stormwater. Weight or secure the sheeting by appropriate means and seal seams as approved by the DDC to prevent tearing or removal by weather. Grade surrounding surface to provide for positive drainage away from pile. Stockpile shall not exceed 100 cubic yards.

2. Institute appropriate procedures and security measures to ensure the protection of site personnel and the public from contaminated materials as described in the approved MHP and Item 8.01 S - Health and Safety.

3. Any soil encountered that appears to contain unknown contaminants (based on visual, odor, or other observation), or that vary substantially from the material originally identified must be segregated in stockpiles and the independent Environmental

Consultant promptly notified. Construct stockpiles to the same requirements as stated in subsection A.1.b above.

4. Provide any dewatering that is necessary to complete the work. Contaminated water shall be disposed of in accordance with Item 8.01 W1 – Removal, Treatment and Discharge/Disposal of Contaminated Water.

5. Provide and operate field organic vapor test equipment, a PID or a flame ionization detector (FID), to detect general organic vapor levels at intervals of approximately fifty (50) cubic yards of soil excavated, when visual or odor observations indicate the material may substantially differ from the soil previously excavated and/or as directed by the independent Environmental Consultant.

B. Off-Site Transportation to Disposal or Treatment Facility

1. General

a. The Contractor shall furnish all labor, equipment, supplies and incidental costs required to transport contaminated material from the work area to the off-site disposal or treatment facility, and any other items and services required for transporting contaminated material for disposal at an off-site facility.

b. The Contractor shall submit the name and location of the facility where an off-site scale is located. The Contractor shall also submit a plan to the DDC for review outlining procedures on controlling trucks leaving the work site and en-route to the off-site scale. The Contractor shall be responsible for tracking all material/vehicles from the site to the off-site scale.

c. The Contractor shall provide to the DDC certified tare and gross weight slips for each load received at the accepted facility which shall be attached to each returned manifest.

d. The Contractor shall coordinate the schedule for truck arrival and material deliveries at the job site to meet the approved project schedule.

e. The Contractor shall inspect all vehicles leaving the project site to ensure that contaminated soils adhering to the wheels or undercarriage are removed prior to the vehicle leaving the site.

f. The Contractor shall obtain letters of commitment from the waste haulers and the treatment, disposal or recovery facility to haul and accept shipments. The letter shall indicate agreement to handle and accept the specified estimated quantities and types of material during the time period specified in the project schedule and any time extension as deemed necessary.

g. **The Program Management, OEGS shall review and approve waste profiles before transportation to the TSD facility.**

2. Hauling

a. The Contractor shall coordinate manifesting, placarding of shipments, and vehicle decontamination. All quantities shall also be measured and recorded upon arrival at the disposal or treatment facility. If any deviation between the two records occurs, the matter is to be reported immediately to the DDC and to be resolved by the Contractor to the satisfaction of the DDC.

b. The Contractor shall be held responsible, at its own cost for any and all actions necessary to remedy situations involving material spilled in transit or mud and dust tracked off-site.

c. The Contractor shall ensure that trucks are protected against contamination by properly covering and lining them with compatible material (such as polyethylene) or by decontaminating them prior to and between acceptances of loads.

d. The Contractor shall be responsible for inspecting the access routes for road conditions, overhead clearance, and weight restrictions.

e. The Contractor shall only use the transporter(s) identified in the MHP for the performance of work. Any use of substitute or additional transporters must have previous written approval from the Program Management, OEGS at no additional cost to the City.

f. The Contractor shall develop, document, and implement a policy for accident prevention.

g. The Contractor shall not combine contaminated materials from other projects with material from this project.

h. No material shall be transported until approved by the DDC.

3. Off-Site Disposal

a. The Contractor shall use only the facility(ies) identified in the MPH for the performance of the work. Substitutions or additions shall not be permitted without prior written approval from the Program Management, OEGS, and if approved shall be at no extra cost to the City.

b. The Contractor shall be responsible for acceptance of the materials at an approved facility, for ensuring that the facility is properly permitted to accept the stated materials, and that the facility provides the stated treatment and/or disposal services.

c. The DDC reserves the right to contact and visit the disposal or treatment facility and regulatory agencies to verify the agreement to accept the stated materials and to verify any other information provided.

d. In the event that the identified and approved facility ceases to accept the stated materials or the facility ceases operations, it is the Contractor's responsibility to locate an alternate approved and permitted facility(ies) for accepting materials. The alternate facility(ies) must be approved in writing by the DDC in the same manner and with the same requirements as for the original facility(ies). This shall be done at no extra cost or delay to the City.

e. The Contractor shall obtain manifest forms, and complete the shipment manifest records required by the appropriate regulatory agencies for verifying the material and quantity of each load in unit of volume and weight. Copies of each manifest shall be submitted to the DDC within four (4) business days following shipment, and within three (3) business days after notification of receipt of the facility. Any manifest discrepancies shall be reported immediately to the DDC and be resolved by the Contractor to the satisfaction of the DDC.

4. Equipment and Vehicle Decontamination

a. The Contractor shall design and construct a portable decontamination station to be used to decontaminate equipment and vehicles exiting from the exclusion zone. The cost for this work will be paid under Item 8.01 S - Health and Safety.

b. Water generated during the decontamination process shall be disposed of in accordance with Item 8.01 W1 – Removal, Treatment and Discharge/Disposal of Contaminated Water.

8.01 C1.4 METHOD OF MEASUREMENT

Quantities for non-hazardous contaminated soils shall be measured in tons. The tonnage will be determined by off-site truck scales, as per Subsection 8.01 C1.3.B1, that are capable of generating load tickets.

8.01 C1.5 PRICE TO COVER

A. The unit bid price bid per ton for Item 8.01 C1 shall include the cost of furnishing all labor, materials, equipment, plan, and insurance for excavation, handling, transportation, disposal, documentation, fees, permits, loading, stockpiling, hauling, and any other incidentals necessary to complete all the work as specified herein for handling, transporting, and disposal of non-hazardous contaminated soil.

B. Final disposal of hazardous soil shall be paid for under Item 8.01 H – Handling, Transporting and Disposal of Hazardous Soils. Disposal of decontamination water shall be paid for under Item 8.01 W1 – Removal, Treatment and Discharge/Disposal of Contaminated Water.

C. Backfill will be paid for under its respective item as specified in the contract document.

D. The independent Environmental Consultant shall be paid under Item 8.01 S – Health and Safety.

Payment will be made under:

ITEM NUMBER	ITEM	PAYMENT UNIT
8.01 C1	Handling, Transporting, and Disposal of Non-Hazardous Contaminated Soil	Tons

ITEM 8.01 C2 SAMPLING AND TESTING OF CONTAMINATED/ POTENTIALLY HAZARDOUS SOIL FOR DISPOSAL PARAMETERS

8.01 C2.1 WORK TO INCLUDE

A. Description

The work shall consist of collecting and analyzing representative soil samples for parameters typically requested by the disposal facilities.

B. Sampling and Laboratory Analysis

1. At least thirty (30) days prior to the commencement of work, the Contractor's independent Environmental Consultant must submit a Soil Sampling Plan/Field Sampling Plan (SSP/FSP) to the Program Management, Office of Environmental and Geotechnical Services (OEGS) for review and approval. The plan shall include the name, address, DOH's ELAP status, and telephone numbers of the proposed laboratory. The plan shall also include training and experience of the personnel who will collect the samples.

2. The Contractor shall sample and analyze representative samples of the contaminated/potentially hazardous soils. For stockpiled soils, the Contractor shall collect and analyze one (1) composite sample per 500 cubic yards or fraction thereof. Each composite sample shall consist of a minimum of five (5) grab samples collected from greater than two (2) feet below the soil surface. For drummed soil, the Contractor shall collect one (1) composite sample per (ten) 10 drums or fraction thereof. Each composite sample shall consist of a grab sample from each of the ten (10) drums or fraction thereof. Each composite sample shall be analyzed for Resource Conservation and Recovery Act (RCRA) hazardous waste characteristics (Ignitability, Reactivity, Corrosivity), Full Toxicity Characteristic Leaching Procedure (TCLP) (including RCRA metals, volatile Organic Compounds (VOCs), Semi-Volatile Organic Compounds (SVOCs), pesticides, herbicides), Total Petroleum Hydrocarbons (TPH) and Polychlorinated Biphenyls (PCBs). All samples collected should be analyzed on a five (5) calendar days turn around time and analytical results must be submitted to Program Management, OEGS upon receipt of the analytical results.

3. All sampling shall be conducted by a person trained in sampling protocols using standard accepted practices for obtaining representative samples.

4. The Contractor must also contact the disposal facility where the waste will be sent for permanent disposal, and arrange to collect any additional samples required by the facility. The cost associated with additional sampling and testing shall be included in the bid price of this Item.

5. The quality of the data from the sampling program is the Contractor's responsibility. The Contractor must furnish all qualified personnel, equipment and instruments necessary to carry out the sampling. Unless directed otherwise, all sampling procedures must follow the DEC sampling guidelines and protocols.

6. All sample containers shall be marked and identified with legible sample labels which shall indicate the project name, sample location and/or container, the sample number, the date and time of sampling, preservatives utilized and other information that may be useful in determining the character of the sample. Chain-of-custody shall be tracked from laboratory issuance of sample containers through laboratory receipt of the samples.

7. The Contractor shall maintain a bound sample logbook. The Contractor shall provide DDC access to it at all times and shall turn it over to the DDC in good condition at the completion of the work. The following information, as a minimum shall be recorded to the log:

    1. Sample identification number
    2. Sample location
    3. Field observation
    4. Sample type
    5. Analyses
    6. Date/time of collection
    7. Collector's name
    8. Sample procedures and equipment utilized
    9. Date sent to laboratory and name of laboratory

8. The City reserves the right to direct the Contractor to conduct alternative sampling in lieu of the parameters described in subsection B2, if the situation warrants. The substitute sampling parameters shall be of equal or lesser monetary value than those described in subsection B2, as determined by industry laboratory pricing standards.

9. Only dedicated sampling equipment may be used to collect these samples. All equipment involved in field sampling must be decontaminated before being brought to the sampling location, and must be properly disposed after use.

10. Soils exceeding any of the hazardous characteristic criteria meet the legal definition of hazardous soils (rather than non-hazardous contaminated soils) and shall be transported or disposed of under Item 8.01 H – Handling, Transporting and Disposal of Hazardous Soils. All analyses must be done by a laboratory that has received approval from the ELAP for the methods to be used. The Contractor must specify the laboratory in the MHP.

8.01 C2.2 METHOD OF MEASUREMENT

Quantities for samples shall be measured as the number of sets of samples that are tested. A set shall be defined as one (1) composite sample analyzed for the full range of parameters as specified in subsection B2.

8.01 C2.3 PRICE TO COVER

The unit price bid per set for Item 8.01 C2 shall include the cost of furnishing all labor, materials, equipment, plan, and insurance necessary for sampling, handling, transporting, testing, documentation, fees, permits and any other incidentals necessary to complete the work as specified herein for sampling and testing of contaminated/potentially hazardous soil.

Payment will be made under:

ITEM NUMBER	ITEM	PAYMENT UNIT
8.01 C2	Sampling and Testing of Contaminated/ Potentially Hazardous Soil for Disposal Parameters	Set

ITEM 8.01 H HANDLING, TRANSPORTING, AND DISPOSAL OF HAZARDOUS SOILS

8.01 H.1 WORK TO INCLUDE

General: This work shall consist of the handling, transportation and disposal of soils or materials that are listed as hazardous wastes or exhibit any of the characteristics of a hazardous waste, namely ignitability, corrosivity, reactivity, and toxicity, as defined in 6 NYCRR Part 371, Section 371.3 and 40 CFR Section 261. For the purpose of this specification, soils shall be defined as any materials excavated below the pavement and base for pavement.

Contaminated soils determined to be hazardous under Item 8.01 C2 shall be handled, transported, and disposed of under Item 8.01 H in accordance with the specifications herein.

The independent Environmental Consultant retained by the Contractor, as specified under Item 8.01 S – Health and Safety, shall conduct sampling and analysis of above soils to determine which soils are hazardous.

All work under Item 8.01 H shall be performed under the direct supervision of the Contractor's Environmental Consultant, as approved by the Program Management, Office of Environmental and Geotechnical Services (OEGS).

The Contractor shall ensure that all operations associated with the handling, sampling, loading, transportation, and disposal of hazardous materials are in compliance with the applicable Federal, State, and Local statutes and regulations.

The Contractor shall document the excavation, handling, sampling, and testing, transportation and disposal of hazardous soils. The City shall be listed in the disposal documents as the waste generator.

The Contractor shall supply all equipment, material and labor required to conduct the specified work of this section.

The Contractor shall ensure that all operations associated with the handling, sampling, loading, transportation and disposal of hazardous soils are conducted in a manner to protect site personnel, the public and the environment, in accordance with all applicable Federal, State, and Local laws and regulations.

The Contractor shall decontaminate all equipment prior to its removal from the exclusion zone and/or following contact with hazardous materials, as detailed in Item 8.01 S - Health and Safety. Water generated during the decontamination process shall be disposed of under Item 8.01 W1 – Removal, Treatment and Discharge/Disposal of Contaminated Water.

A. Material Handling Plan: Within forty-five (45) calendar days after award of Contract, the Contractor shall submit to the Program Management, OEGS for review, a Material Handling Plan (MHP). The MHP must be approved by the Program Management, OEGS, prior to the Contractor's commencement of work. The MHP shall, at a minimum, consist of:

   1. The Contractor's procedures for identifying contaminated/potentially hazardous soils during excavation, including instrumentation and calibration procedures to be used.

   2. The Contractor's procedures for safely handling hazardous soils or soils which have not yet been tested but are believed to be potentially hazardous.

   3. Identification of the Contractor's proposed waste transporter(s). This information shall include:

      a. Name and waste transporter permit number

b. Address

c. Name of responsible contact for the hauler

d. Telephone number for the contact

e. Any and all necessary permit authorizations for each type of waste transported

f. Previous experience in performing the type of work specified herein

4. All staging/stockpiling areas (if stockpiling areas are intended and available), or alternate procedures that will be used. Alternate procedures could include, but are not limited to, agreements from the intended disposal or treatment facilities to accept boring data and/or analytical data previously obtained during the site characterization so that materials may be directly loaded into vehicles for shipment to the disposal facility or the use of off-site stockpiling locations approved by the DEC.

5. A backup facility, should the staging/stockpile areas become unavailable, insufficient in area or not be present by some other unforeseen difficulty.

6. Identification of the Contractor's two proposed United State Environmental Protection Agency (EPA) or DEC approved RCRA TSD facilities for hazardous soils.

7. The Contractor shall submit the following information prior to any transportation of soils regarding the temporary and final off-site TSD or facilities where it is proposing to take hazardous soils. The expense of furnishing all information will be included in the Contractor's bid price:

   a. General Information

      (1) Facility name and the EPA identification number

      (2) Facility location

      (3) Name of responsible contact for the facility

      (4) Telephone number for contact

      (5) Signed letter of agreement to accept waste as specified in this contract

      (6) Signed letter of agreement with a TSD for disposal of waste that may not be land-disposed

      (7) Unit of measure utilized at each facility for costing purposes

   b. A listing of all permits, licenses, letters of approval, and other authorizations to operate, which are currently held and valid for the proposed facility as they pertain to receipt and management of wastes derived from this Contract.

   c. A listing of all permits, licenses, letters of approval, and other authorizations to operate which have been applied for by the proposed facility.

   d. The Contractor shall specify and describe the disposal/containment unit(s) that the proposed facility will use to manage the waste. The Contractor shall identify the capacity available in the units and the capacity reserved for the subject waste.

   e. The Contractor shall provide the date of the proposed facility(ies) last compliance inspection under RCRA.

   f. A list of all active (unresolved) compliance orders, agreements, enforcement notices or notices of violations issued to the proposed facility shall be approved. The source and nature of the cause of violation shall be stated, if known.

8. Description of all sampling and analyses that will be needed to obtain disposal facility approval.

8.01 H.2 MATERIALS

A. Containers shall be watertight as required in the DOT regulations and must meet all applicable regulations including but not limited to those in Attachment 2.

B. Polyethylene (20 mil. thickness minimum) to be placed under and (10 mil. thickness minimum) over soil piles. If soils are placed in drums, polyethylene must be placed over the drums.

8.01 H1.3 CONSTRUCTION DETAILS

A. Material Handling

1. The Contractor shall institute procedures to protect site personnel and the public from the non-hazardous and hazardous materials as described in Section 8.01 S - Health and Safety.

2. The Contractor shall handle hazardous soil as approved in the MHP.

3. Stockpiled materials at the temporary TSD facility shall be handled according to the facility requirements but at a minimum: shall be drummed or placed on and covered with polyethylene to protect against erosion and leaching into surrounding soils, the stockpile area shall be graded for positive drainage away from the pile, and shall be labeled while being held for sampling prior to permanent disposal.

4. Provide any dewatering that is necessary to complete the work. Water shall be disposed of in accordance with Item 8.01 W1 – Removal, Treatment and Discharge/Disposal of Contaminated Water.

B. Off-Site Transportation and Disposal

1. The Contractor shall furnish all labor, equipment and supplies required to transport hazardous materials from the work area to the off-site TSD facility(ies) and to acquire any other items and services required for transporting hazardous materials for storage and/or disposal at an approved off-site facility.

2. Weight Measurement

a. The Contractor shall submit the name and location of the facility where an off-site scale is located. The Contractor shall also submit a plan to the DDC for review outlining procedures on controlling trucks leaving the work site and on-route to the off-site scale. The Contractor shall be responsible for tracking all materials/vehicles from the site to the off-site scale.

b. The Contractor shall provide to the DDC certified tare and gross weight slips for each load received at the accepted facility which shall be attached to each returned manifest.

3. General

a. Manifests: The Contractor shall organize and maintain the material shipment records/manifests required by law.

b. The Contractor shall coordinate the schedule for truck arrival and material deliveries at the job site to meet the approved project schedule. The schedule shall be compatible with the availability of equipment and personnel for material handling at the job site.

c. The Contractor shall inspect all vehicles leaving the project site to ensure that hazardous soils adhering to the wheels or under carriage are removed prior to the vehicle leaving the site.

d. The Contractor shall obtain letters of commitment from the waste haulers and the TSD facility to haul and accept shipments. The letter shall indicate agreement to handle and accept the specified estimated quantities and types of material during the time period specified in the project schedule and any time extension as deemed as necessary.

4. Hauling

a. The Contractor shall not deliver waste to any facility other than the TSD facility(ies) listed on the shipping manifest.

b. The Contractor shall coordinate manifesting, placarding, of shipments, and vehicle decontamination. All quantities shall also be measured and recorded upon arrival at the TSD facility. If any deviation between the two records occurs, the matter is to be reported immediately to the DDC and to be resolved by the Contractor to the satisfaction of the DDC.

c. The Contractor shall be held responsible, at its own expense, for any and all actions necessary to remedy situations involving material spilled in transit or mud and dust tracked off-site.

d. The Contractor shall ensure that trucks are protected against contamination by properly covering and lining them with compatible material (such as polyethylene) or by decontaminating them prior to any use other than hauling hazardous materials.

e. The Contractor shall be responsible for inspecting the access routes for road conditions, overhead clearance, and weight restrictions.

f. The Contractor shall only use the transporter(s) identified in the MHP for the performance of work. Only a transporter with a current Part 364 Waste Transporter Permit from the DEC may transport this material. Any use of substitute or additional transporters must have previous written approval from the DDC and such substitution or additional transporter shall be at no additional cost to the City.

g. The Contractor shall develop, document, and implement a policy for accident prevention.

h. The Contractor shall not combine hazardous materials from other projects with material from this project.

i. **The Contractor shall obtain for the City an EPA hazardous waste generator identification number and a representative of Program Management, OEGS will review and sign the manifest as the generator.**

j. No materials shall be transported until approved by the DDC.

5. Off-Site Disposal

a. The Contractor shall be responsible for acceptance of the materials at an approved TSD facility, for ensuring that the facility is properly permitted to accept the stated materials, and that the facility provides the stated storage and/or disposal services.

b. In the event that the identified and approved facility ceases to accept the stated materials or the facility ceases operations, it is the Contractor's responsibility to locate an alternate approved and permitted facility(ies) for accepting materials. The Contractor is responsible for making the necessary arrangements to utilize the facility(ies), and the alternate facility(ies) must be approved in writing by the DDC in the same manner and with the same requirements as for the original facility(ies). This shall be done with no extra cost or delay to the City.

c. The Contractor shall submit all results and weights to the DDC.

d. **The Contractor is responsible to pay <u>all fees</u> associated with the generation and disposal of all excavated hazardous waste. These fees include, but are not limited to, the <u>New York State Department of Finance and Taxation (DFT) quarterly fees</u> for hazardous waste and the <u>New York State DEC annual hazardous waste regulatory fee program</u>. The Contractor shall submit a copy of proof of payment to the DDC and Program Management, OEGS.**

6. Equipment and Vehicle Decontamination

The Contractor shall design and construct a portable decontamination station to be used to decontaminate equipment and vehicles exiting from the exclusion zone. The cost for this work shall be paid under Item 8.01 S - Health and Safety. Disposal of decontamination liquids is described under Item 8.01 W1 – Removal, Treatment and Discharge/Disposal of Contaminated Water.

7. Record Keeping

The Contractor shall obtain manifest forms, and complete the shipment manifest records required by the appropriate regulatory agencies for verifying the material and quantity of each load in unit of volume and weight. Copies of each manifest shall be submitted to the DDC within four (4) business days following shipment, and within three (3) business days after notification of receipt of the facility. Any manifest discrepancies shall be reported immediately to the DDC and be resolved by the Contractor to the satisfaction of the DDC.

8.01 H.4 METHOD MEASUREMENT

Quantities for hazardous soil shall be measured in tons satisfactorily delivered to the treatment, storage or disposal facility. The tonnage will be determined by off-site truck scales, as per subsection 8.01 H1.3.B.2, that are capable of generating load tickets.

8.01 H.5 PRICE TO COVER

A. The unit price bid per ton for Item 8.01 H shall include the cost of furnishing all labor, materials, equipment, plan, and insurance for excavation, handling, transportation, disposal, documentation, permits, fees, taxes, stockpiling, hauling, and any other incidentals necessary to complete the work as specified herein for handling, transporting and disposal of hazardous soils.

B. Final disposal of non-hazardous materials shall be paid for under Item 8.01 C1 – Handling, Transporting and Disposal of Non-Hazardous Soils. Disposal of decontamination water shall

be paid under Item 8.01 W1 – Removal, Treatment and Discharge/Disposal of Contaminated Water.

C The independent Environmental Consultant shall be paid under Item 8.01 S – Health and Safety.

D. Backfill will be paid for under its respective item.

Payment will be made under:

ITEM NUMBER	ITEM	PAYMENT UNIT
8.01 H	Handling, Transporting, and Disposal of Hazardous Soils	Tons

ITEM 8.01 S HEALTH AND SAFETY

8.01 S.1 WORK TO INCLUDE

Health and Safety Requirements

A. Scope of Work

It is the Contractor's responsibility to stage and conduct his work in a safe manner. The Contractor shall implement a Health and Safety Plan (HASP) for contaminated/hazardous soil intrusive activities as set forth in Occupational Safety and Health Administration (OSHA) Standards 1910.120 and 1926.650-652. The Contractor shall ensure that all workers have at a minimum hazard awareness training. The Contractor shall segregate contaminated work area in secured exclusion zones. These zones shall limit access to Contractor personnel specifically trained to enter the work area. The exclusion zone shall be set up to secure the area from the public and untrained personnel. The project health and safety program shall apply to all construction personnel including persons entering the work area. In addition, the Contractor shall protect the public from on-site hazards, including subsurface contaminants associated with on-site activities. The HASP shall be signed off by a Certified Industrial Hygienist and reviewed by Program Management, Office of Environmental and Geotechnical Services (OEGS).

Work shall include, but not be limited to:

1. Implementation of a baseline medical program.
2. Providing safety equipment and protective clothing for site personnel, including maintenance of equipment on a daily basis; replacement of disposable equipment as required; decontamination of clothing, equipment and personnel; and providing all other health and safety measures.
3. Providing, installing, operating and maintaining on-site emergency medical first aid equipment as specified in this section for which payment is not provided under other pay items in this Contract.
4. Providing, installing, operating, maintaining and decommissioning all equipment and personnel decontamination facilities specified within this section, including, but not limited to, the decontamination pad, decontamination water supply, decontamination water collection equipment and all other items and services required for the implementation of the health and safety requirements for which pay items are not provided elsewhere in this Contract.

5. Provide the minimum health and safety requirements for excavation activities within the limits of this Contract.

6. Implement and enforce a HASP: The HASP as presented in these specifications is dynamic with provisions for change to reflect new information, new practices or procedures, changing site environmental conditions or other situations which may affect site workers and the public. The HASP will also address measures for community protection, accident prevention, personnel protection, emergency response/contingency planning, air monitoring, odor control and hazardous chemicals expected on site. Providing a Confined Space Entry Program as defined in the Occupational Safety and Health Act, Confined Space Entry Standard, 29 CFR 1910.146.

B. Environmental Consulting Services

The Contractor shall retain an independent Environmental Consultant to obtain all permits and perform all field screening, air monitoring, community air monitoring, soil sampling, and health and safety services. The independent Environmental Consultant shall at a minimum provide documentation to the Program Management, OEGS demonstrating the minimum requirements as set forth below:

1. The independent Environmental Consultant project supervisor on site and other designated key personnel shall have a minimum of three (3) years experience in the environmental field dealing with issues associated with contaminated soils. Such experience shall include oversight on environmental, specifically volatile organic compound and dust monitoring services as a routine part of its daily operations.

2. The independent Environmental Consultant must be experienced in work of this nature, size, and complexity and must have previous experience in working with the DEC.

3. The independent Environmental Consultant shall furnish a project listing identifying the location, nature of services provided, owner, owner's contact, contact's telephone number, project duration and value for at least five (5) projects within the last three (3) years.

4. If conditions within the exclusion zone are deemed hazardous, then the Contractor and its independent Environmental Consultant shall ensure that all personnel working within identified exclusion zones and/or involved (direct contact) with the handling, storage or transport of hazardous and contaminated materials shall have completed a minimum of forty (40) hours of Health and Safety Training on Hazardous Waste Sites in accordance with 29 CFR 1910.120(e). The training program shall be conducted by a qualified safety instructor. If conditions in the exclusion zone are deemed to be non-hazardous, the independent Environmental Consultant shall provide site specific training.

5. The Contractor shall ensure that on-site management and supervisors directly responsible for or who supervise employees engaged in hazardous waste operations shall receive the training specified in above and at least eight (8) additional hours of specialized training on managing such operations at the time of job assignment.

C. Submittals

1. The Contractor shall submit, within forty-five (45) calendar days after the contract award, a written HASP as specified herein, to Program Management, OEGS for review and comment. The Contractor shall make all necessary revisions required by Program Management, OEGS and resubmit the HASP to the Program Management, OEGS for acceptance. Start-up work for the project will not be permitted until written acceptance has been issued by the Program Management, OEGS.

2. Daily safety logs shall be maintained by the Contractor and shall be submitted to the DDC either on request or on completion of the work. Training logs shall be maintained by the Contractor and submitted to the DDC either on request or on completion of the work. Daily logs on air monitoring during excavation activities shall be prepared and maintained by the Contractor and submitted to the DDC either on request or upon completion of the work.

3. A closeout report shall be submitted by the Contractor to the DDC upon completion of the work within the defined exclusion zones. This report shall summarize the daily safety and monitoring logs and provides an overview of the Contractor's performance regarding environmental and safety issues. The report shall carefully document all areas where contamination has been found including pictures, addresses of locations, and potential sources.

4. Medical Surveillance Examinations: The Contractor shall submit to the DDC the name, office address and telephone number of the medical consultant utilized. Evidence of baseline medical examinations together with the evidence of the ability to wear National Institute for Occupational Safety and Health (NIOSH) approved respirators (as specified in American National Standards Institute (ANSI) Z88.6) shall be provided to the DDC for all construction personnel who are to enter the exclusion zones.

5. Accident Reports: All accidents, spills, or other health and safety incidents shall be reported to the DDC.

D. Health and Safety Plan

The HASP shall comply with OSHA regulations 29 CFR 1910.120/1926.65. This document shall at a minimum contain the following:

1. Description of work to be performed
2. Site description
3. Key personnel
4. Worker training procedures
5. Work practices and segregation of work area
6. Hazardous substance evaluation
7. Hazard assessment
8. Personal and community air monitoring procedures and action levels
9. Personal protective equipment
10. Decontamination procedures
11. Safety rules
12. Emergency procedures
13. Spill control, dust control, vapor/odor suppression procedures
14. Identification of the nearest hospital and route
15. Confined space procedures
16. Excavation safety procedures

8.01 S.2 MEASUREMENT

Health and Safety Requirements

A. 25% of the lump sum price will be paid when the following items are implemented or mobilized:

Medical surveillance program
Health and safety training
Health and safety plan

Environmental and personnel monitoring
Instrumentation
Spill control
Dust control
Personnel and equipment decontamination facilities
Personnel protective clothing
Communications
Mobilization

B. 50% will be paid in proportional monthly amounts over the period of work.

C 25% will be paid when the operation is demobilized and removed from the project site.

8.01 S.3 PRICE TO COVER

Health and Safety Requirements

The lump sum price bid for the health and safety requirements shall include all labor, materials, equipment, and insurance necessary to complete the work in accordance with these specifications. The price bid shall include, but not be limited to, the following:

A. Providing training, safety personnel, air monitoring and medical examinations as specified.

B. Providing safety equipment and protective clothing for site personnel, including maintenance of equipment on a daily basis; replacement of disposable equipment as required; decontamination of clothing, equipment and personnel; and all other health and safety activities or costs not paid for under other pay items in this Contract.

C. Providing, installing, operating and maintaining on-site emergency medical and first aid equipment. This includes all furnishings, equipment, supplies and maintenance of all medical equipment, and all other health and safety items and services for which payment is not provided under other pay items in this Contract.

D. Providing, installing, operating, maintaining, and decommissioning all personnel and equipment decontamination facilities, including decontamination pad, decontamination water supply, and all other items and services required for the implementation of the health and safety requirements for which pay items are not provided elsewhere in this Contract. Vehicle decontamination pads shall be included in the price of this item. Disposal of decontamination fluid shall be paid for under Item 8.01 W1 – Removal, Treatment and Discharge/Disposal of Contaminated Water.

E. Spill Control

1. Payment shall account for furnishing, installing, and maintaining all spill control equipment and facilities. Payment will include equipment and personnel to perform emergency measures required to contain any spillage and to remove spilled materials and soils or liquids that become contaminated due to spillage during work within the exclusion zones and handling of excavated soils and liquids from these areas. This collected spill material will be properly disposed of.

2. Payment under this item shall not include testing, handling, transportation or disposal of petroleum-contaminated/potentially hazardous soils excavated during construction. The price for this work will be paid for under Items 8.01 C1 – Handling, Transporting and Disposal of Non-Hazardous Contaminated Soils, 8.01 C2 – Sampling and Testing of Contaminated/Potentially Hazardous Soil for Disposal Parameters or 8.01 H – Handling, Transporting and Disposal of Hazardous Soils, as appropriate.

F. Dust Control

Payment shall account for furnishing, installing, and maintaining dust control equipment and facilities to be used whenever applicable dust levels are exceeded. Payment will include all necessary labor, equipment, clean water, foam, and all other materials required by the Dust Control Plan. The DOH Community Air Monitoring Plan (CAMP) may be used as guidance.

G. Vapor/Odor Suppression

Payment shall account for furnishing, installing and maintaining vapor/odor control equipment and facilities to be used whenever organic vapor monitoring or the presence of odors indicates that vapor suppression is required to protect workers or the public. Payment will include all necessary labor, equipment, clean water, foam and all other materials required by the Vapor/Odor Suppression Plan.

H. Mobilization/Demobilization

1. Mobilization

Payment shall include but not be limited to:

a. All work required to furnish, install and maintain all signs, fencing, support zone facilities, parking areas and all temporary utilities;

b. All work required to furnish, install, and maintain an office space with phone and utilities for health and safety personnel;

c. All work required for complete preparation of lay down area for roll-off containers, including sampling, and any required fencing;

d. All direct invoiced cost from bonding companies and government agencies for permits and costs of insurance; and

e. All other items and services required for mobilization and site preparation.

2. Demobilization

Payment shall include but not be limited to: All work required to sample the area; remove from the site all equipment, temporary utilities and supporting facilities; performance of necessary decontamination and repairs; disposal of disposable equipment and protective gear and other items and services required for complete demobilization.

Payment will be made under:

ITEM NUMBER	ITEM	PAYMENT UNIT
8.01 S	Health and Safety	Lump Sum

ITEM 8.01 W1 REMOVAL, TREATMENT, AND DISCHARGE/DISPOSAL OF CONTAMINATED WATER

8.01 W1.1 WORK TO INCLUDE

General: This work shall consist of the proper removal and disposal of all contaminated groundwater and decontamination water generated during construction operations. The Contractor shall be solely responsible for the proper disposal or discharge of all contaminated water generated at the job site. The Contractor will have the option of treating water on-site for discharge to the combined sanitary/storm sewer system or removing contaminated water for off-site disposal. The Contractor shall be responsible to choose a method compatible to the construction work and shall be compensated on a per day basis regardless of method employed. The Contractor will be compensated for only those days where the system is in full operation.

The Contractor shall retain a dewatering/water treatment Specialist (hereinafter the "Specialist") and laboratory as specified under Item 8.01 W2 – Sampling and Testing of Contaminated Water, to conduct any testing that may be required for disposal of impacted water.

The dewatering/water treatment Specialist is responsible to obtain all permits; perform all water sampling, testing; and provide ancillary services related to dewatering and water treatment. The Specialist shall at a minimum provide documentation to the Program Management, Office of Environmental and Geotechnical Services (OEGS) demonstrating the minimum requirements as set forth below:

1. The Specialist shall demonstrate that it has, at a minimum, three (3) years experience in the design of dewatering plans. The Specialist should demonstrate expertise dealing with issues associated with contaminated water. During that three (3) year period, the Specialist shall demonstrate that it provided dewatering and water treatment systems as a routine part of its daily operations.
2. The Specialist must be experienced in work of this nature, size, and complexity and must have previous experience in working with the DEC.
3. The Specialist shall furnish a project listing identifying the location, nature of services provided, owner, owner's contact, contact's telephone number, project duration and value for at least five (5) projects within the last three (3) years of a similar nature, size, and complexity to this one.
4. If conditions within the exclusion zone are deemed hazardous, then the Contractor and its independent Environmental Consultant shall ensure that all personnel working within identified exclusion zones and/or involved (direct contact) with the handling, storage or transport of hazardous and contaminated material shall have completed a minimum of forty (40) hours of Health and Safety Training on Hazardous Waste Sites in accordance with 29 CFR 1910.120(e). The training program shall be conducted by a qualified safety instructor. If conditions in the exclusion zone are deemed to be non-hazardous, the Specialist shall be responsible to provide site-specific training to its employees and other affected personnel.
5. The Contractor shall ensure that on-site management and supervisors directly responsible for or who supervise employees engaged in hazardous waste operations shall receive the training specified in above and at least eight (8) additional hours of specialized training on managing such operations at the time of job assignment.

The Contractor shall document all operations associated with the handling, sampling and disposal of contaminated water, and ensure that they are in compliance with applicable Federal, State and Local statutes and regulations.

The Contractor shall supply all labor, equipment, transport, plant, material, treatment, and other incidentals required to conduct the specified work of this section.

If water will be disposed of into the combined sanitary/storm sewer system, the Contractor shall ensure the Specialist treats the water to comply with the New York City Department of Environmental Protection (DEP) Sanitary/Combined and Storm Sewer Effluent Limit concentrations prior to discharge. The Contractor is responsible for providing settling or filtering tanks and any other apparatus required by DEP. Alternatively, the Contractor can provide a plan for transport and disposal at an off-site waste disposal facility.

Within forty-five (45) calendar days after award of Contract, the Contractor shall submit to the Program Management, OEGS for review, a Water Handling Plan (WHP). The WHP must be approved by the Program Management, OEGS, prior to the Contractor's commencement of work. The minimum requirements for the WHP are specified herein Item 8.01W 1.2, for each type of disposal (disposal into the combined sanitary/storm sewer or off-site disposal). The Contractor shall maintain a complete, up to date copy of the WHP on the job site at all times.

8.01 W1.2 CONSTRUCTION DETAILS

For each disposal method the Contractor proposes to utilize (disposal to combined sanitary/storm sewer or off-site disposal), the WHP shall include the information required in paragraphs A and B below, as appropriate.

A. <u>On-site treatment and discharge into New York City combined sanitary/storm sewers.</u>

1. Regulations: The Contractor shall comply with all applicable regulations. This includes but may not be limited to:

   Title 15-New DEP Sewer Use Regulations.

2. Permits: The Contractor is solely responsible to obtain all necessary and appropriate Federal, State and Local permits and approvals. The Contractor will be responsible for performing all and any system pilot tests required for permit approval. This includes but may not be limited to:

   a. Industrial waste approval for the New York City sewer system.

   b. Groundwater discharge permit for the New York City sewer system (DEP Division of Sewer Regulation and Control), if discharge to sewer exceeds 10,000 gallons per day.

   c. The Contractor shall comply with DEC State Pollutant Discharge Elimination System (SPDES) Permit Number GP-0-10-001, General Permit for Stormwater Discharges.

   d. Long Island well point permit for Brooklyn and Queens sites, if well points are used for dewatering.

   e. Wastewater quality control application, DEP.

3. The WHP for this portion of the work shall include at a minimum:

a. Identification and design of Contractor's proposed treatment to assure that the water meets the DEP sewer use guidelines prior to discharge to the sewer, including identification of all materials, procedures, settling or filtering tanks, filters and other appurtenances proposed for treatment and disposal of contaminated water.

b. The name, address and telephone number of the contact for the Contractor's proposed chemical laboratory, as well as the laboratory's certifications under Federal, State or non-governmental bodies.

c. The name, address and telephone number of the contact for the Contractor's proposed independent Environmental Consultant.

d. Copies of all submitted permit applications and approved permits the Contractor have received.

4. Materials

The Contractor shall supply all settling or filtering tanks, pumps, filters, treatment devices and other appurtenances for treatment, temporary storage and disposal of contaminated water. All equipment shall be suitable for the work described herein.

5. Execution

a. The Contractor is solely responsible for disposal of all water, in accordance with all Federal, State and Local regulations.

b. The Contractor is solely responsible for any treatment required to assure that water discharged into the sewer is in compliance with all permits and Federal, State and Local statutes and regulations.

c. The Contractor is solely responsible for the quality of the water disposed of into the sewers.

d. The Contractor is responsible for sampling and testing of water for the DEP Sanitary/Combined and Storm sewer Effluent Limit concentrations. The quality of the data is the Contractor's responsibility. Any sampling and testing shall be conducted and paid in accordance with Item 8.01 W2 – Sampling and Testing of Contaminated Water.

e. The Contractor shall be responsible to maintain the discharge rate to the sewer such that all permit requirements are met, the capacity of the sewer is not exceeded and no surcharging occurs downstream due to the Contractor's actions. Dewatering by means of well points or deep wells will not be allowed in the Boroughs of Brooklyn or Queens where the rate of pumping exceeds forty-five (45) gallons per minute unless the appropriate permit has been secured from the DEC.

f. Disposal of Treatment Media

(1) The Contractor shall be responsible for disposal or recycling of treatment media in accordance with all Federal, State and Local regulations.

(2) The Contractor shall provide the DDC with all relevant documentation concerning the disposal of treatment media, including manifests, bills of lading, certificates of recycling or destruction and other applicable documentation.

(3) **Disposal of treatment media shall not be considered as a separate pay item; instead it shall be considered as incidental work thereto and included in the unit price bid.**

B. Off-Site Disposal

1. Regulations: The Contractor shall conform to all applicable Federal, State and Local regulations pertaining to the transportation, storage and disposal of any hazardous and/or non-hazardous materials as listed in Attachment 2.

2. The following shall be submitted to the DDC prior to initiating any off-site disposal:

a. (1) Name and waste transporter permit number

(2) Address

(3) Name of responsible contact for the hauler

(4) Any and all necessary permit authorizations for each type of waste transported

(5) Previous experience in performing the type of work specified herein

b. General information for each proposed treatment/disposal facility and at least one backup treatment/disposal facility

(1) Facility name and EPA identification number

(2) Facility location

(3) Name of responsible contact for the facility

(4) Telephone number for contact

(5) Unit of measure utilized at facility for costing purposes

c. A listing of all permits, licenses, letters of approval and other authorizations to operate, which are currently held and valid for the proposed facility as they pertain to receipt and management of the wastes derived from this Contract.

d. A listing of all permits, licenses, letters of approval and other authorizations to operate which have been applied for by the proposed facility but not yet granted or issued. Provide dates of application(s) submitted. Planned submittals shall also be noted.

e. The Contractor shall specify and describe the disposal/containment unit(s) that the proposed facility will use to manage the waste and provide dates of construction and beginning of use, if applicable. Drawings may be provided. The Contractor shall identify the capacity available in the units and the capacity reserved for the subject waste.

f. The Contractor shall provide the date of the proposed facility's last compliance inspection.

g. A list of all active (unresolved) compliance orders, agreements, enforcement notices or notices of violations issued to the proposed facility shall be submitted. The source and nature of the cause of violation shall be stated, if known. If groundwater contamination is noted, details of the facility's groundwater monitoring program shall be provided.

h. Description of all sampling and field/laboratory analyses that will be needed to obtain disposal facility approval.

3. Materials

All vessels for temporary storage and transport to an off-site disposal facility shall be as required in DOT regulations.

4. Execution

a. General

(1) The Contractor shall organize and maintain the material shipment records/manifests required by Federal, State and Local law. The Contractor shall include all bills of lading, certificates of destruction, recycling or treatment and other applicable documents.

(2) The Contractor shall coordinate the schedule for truck arrival and material deliveries at the job site to meet the approved project schedule. The schedule shall be compatible with the availability of equipment and personnel for material handling at the job site.

(3) The Contractor shall inspect all vehicles leaving the project site to ensure that contaminated liquids are not spilling and are contained for transport.

(4) The Contractor shall obtain letters of commitment from the waste haulers and the treatment, disposal or recovery facility to haul and accept shipment. The letter shall indicate agreement to handle and accept the specified estimated quantities and types of material during the time period specified in the project schedule and any time extension as deemed as necessary.

(5) The Contractor shall verify the volume of each shipment of water from the site.

(6) The Contractor is responsible for sampling and testing of water for off-site disposal. The quality of the data is the Contractor's responsibility. Any sampling and testing shall be conducted and paid in accordance with Item 8.01 W2 – Sampling and Testing of Contaminated Water.

(7) The Contractor shall be responsible for any additional analyses required by the TSD facility, and for the acceptance of the water at an approved TSD facility.

b. Hauling

(1) The Contractor shall not deliver waste to any facility other than the TSD facility(ies) listed on the shipping manifest.

(2) The Contractor shall coordinate manifesting, placarding of shipments, and vehicle decontamination. All quantities shall also be measured and recorded upon arrival at the TSD facility(ies). If any deviation between the two records occurs, the matter is to be reported immediately to the DDC and shall be resolved by the Contractor to the satisfaction of the DDC.

(3) The Contractor shall be held responsible for any and all actions necessary to remedy situations involving material spilled in transit or mud and dust tracked off-site. This cleanup shall be accomplished at the Contractor's expense.

(4) The Contractor shall be responsible for inspecting the access routes for road conditions, overhead clearance and weight restrictions.

(5) The Contractor shall only use the transporter(s) identified in the WHP for the performance of work. Only a transporter with a current Part 364 Waste Transporter Permit from DEC may transport this material. Any use of substitute or additional transporters must have previous written approval from the DDC at no additional cost to the City.

(6) The Contractor shall develop, document, and implement a policy for accident prevention.

(7) The Contractor shall not combine waste materials from other projects with material from this project.

(8) The Contractor shall obtain for the City a hazardous waste generator identification number and will sign the manifest as the generator, if necessary.

(9) No material shall be transported until approved by the DDC.

c. Disposal Facilities

(1) The Contractor shall use only the TSD facility(ies) identified in the WHP for the performance of the work. Substitutions or additions shall not be permitted without prior written approval from the Program Management, OEGS, and, if approved, shall be at no extra cost to the City.

(2) The Contractor shall be responsible for acceptance of the material at an approved TSD facility, for ensuring that the facility is properly permitted to accept the stated material, and that the facility provides the stated storage and/or disposal services.

(3) The DDC reserves the right to contact and visit the disposal facility and regulatory agencies to verify the agreement to accept the stated material and to verify any other information provided. This does not in any way relieve the Contractor of his responsibilities under this Contract.

(4) In the event that the identified and approved facility ceases to accept the stated materials or the facility ceases operations, it is the Contractor's

responsibility to locate an alternate approved and permitted facility(ies) for accepting materials. The Contractor is responsible for making the necessary arrangements to utilize the facility(ies), and the alternate facility(ies) must be approved in writing by the DDC in the same manner and with the same requirements as for the original facility(ies). This shall be done with no extra cost or delay to the City.

d. Equipment and Vehicle Decontamination

(1) The Contractor shall design and construct a portable decontamination station to be used to decontaminate equipment and vehicles exiting the exclusion zone. The cost for this work shall be paid under Item 8.01 S – Health and Safety.

8.01 W1.3 METHOD OF MEASUREMENT

The quantity for on-site treatment and discharge or off-site disposal shall be on a per day basis.

8.01 W1.4 PRICE TO COVER

A. The per day price bid for Item 8.01 W1 shall include the cost of furnishing all labor, materials, equipment, plan, and insurance for handling, transportation, disposal, documentation, permits, hauling, mobilization and demobilization, and any other incidentals thereto to complete the work.

B. The Contractor will not be paid for water that is within the DEP Sewer Discharge Limits.

Payment will be made under:

ITEM NUMBER	ITEM	PAYMENT UNIT
8.01 W1	Removal, Treatment and Disposal/Discharge of Contaminated Water	Day

ITEM 8.01 W2 SAMPLING AND TESTING OF CONTAMINATED WATER

8.01 W2.1 WORK TO INCLUDE

A. Description

The work shall consist of sampling and testing of potentially contaminated groundwater, surface runoff within the excavated area and all contaminated water generated during the decontamination process.

B. Sampling and Testing

1. The Contractor is responsible, at a minimum, for sampling and testing of contaminated water for the DEP Sanitary/Combined and Storm Sewer Effluent Limit concentrations as listed in Attachment 1. The quality of the data is the Contractor's responsibility. Any additional testing required by the Federal, State and/or disposal facilities shall be included in the bid price of this Item.

2. All sampling and testing shall be conducted by a person trained in sampling protocols using accepted standard practices and/or the DEC sampling guidelines and protocols.

3. All sample containers shall be marked with legible sample labels which shall indicate the project name, sample location and/or container, the sample number, the date and time of sampling, preservatives utilized, how the sample was chilled to 4 degrees Celsius, and other information that may be useful in determining the character of the sample.

4. Chain-of-custody shall be tracked from laboratory issuance of sample containers through receipt of the samples.

5. The Contractor shall maintain a bound sample log book. The Contractor shall provide the DDC access to it at all times and shall turn it over to the DDC in good condition at the completion of the work. The following information, as a minimum, shall be recorded to the log:

   a. Sample identification number

   b. Sample location

   c. Field observation

   d. Sample type

   e. Analyses

   f. Date/time of collection

   g. Collector's name

   h. Sample procedures and equipment used

   i. Date sent to laboratory/name of laboratory

6. Only dedicated sampling equipment may be used to collect these samples. All equipment involved in field sampling must be decontaminated before being brought to the site, and must be properly disposed of after use.

7. Samples shall be submitted to the Contractor's laboratory within the holding times for the parameters analyzed.

8. All analyses must be done by a laboratory that has received approval from the DOH's ELAP for the methods to be done. The Contractor must specify the laboratory in the WHP.

9. Analytical results for water discharged to the sewer and for off-site disposal must be submitted to the DDC no later than five (5) days after sample collection.

10. The City reserves the right to direct the Contractor to conduct alternative sampling in lieu of the parameters described above, if the situation warrants. The substitute sampling parameters shall be of equal or lesser monetary value than those described above, as determined by industry laboratory pricing standards.

8.01 W2.2 METHOD OF MEASUREMENT

Quantities for samples shall be measured as the number of sets of samples that are tested for the DEP Sanitary/Combined and Storm Sewer Effluent Limit concentrations. A set shall be defined as one (1) representative sample analyzed for the full range of DEP parameters as specified in attachment 1.

8.01 W2.3 PRICE TO COVER

The unit price bid per set for Item 8.01 W2 shall include the cost of furnishing all labor, materials, equipment, plan, and insurance for handling, transport, sampling, testing, documentation, permits, other incidentals necessary to complete the work of sampling and testing of contaminated water. Any additional costs incurred by the Contractor for sampling and testing of contaminated water shall be included in the bid price of this Item.

Payment will be made under:

ITEM NUMBER	ITEM	PAYMENT UNIT
8.01 W2	Sampling and Testing of Contaminated Water	Set

ATTACHMENT 1: NYCDEP LIMITATIONS FOR DISCHARGE TO STORM, SANITARY/COMBINED SEWER

NEW YORK CITY DEPARTMENT OF ENVIRONMENTAL PROTECTION
BUREAU OF WASTEWATER TREATMENT

Limitations for Effluent to Sanitary or Combined Sewers

Parameter[1]	Daily Limit	Units	Sample Type	Monthly Limit
Non-polar material[2]	50	mg/l	Instantaneous	---
pH	5-11	SU's	Instantaneous	---
Temperature	< 150	Degree F	Instantaneous	---
Flash Point	> 140	Degree F	Instantaneous	---
Cadmium	2 0.69	mg/l mg/l	Instantaneous Composite	--- --
Chromium (VI)	5	mg/l	Instantaneous	---
Copper	5	mg/l	Instantaneous	---
Lead	2	mg/l	Instantaneous	---
Mercury	0.05	mg/l	Instantaneous	---
Nickel	3	mg/l	Instantaneous	---
Zinc	5	mg/l	Instantaneous	---
Benzene	134	ppb	Instantaneous	57
Carbontetrachloride	---	---	Composite	---
Chloroform	---	---	Composite	---
1,4 Dichlorobenzene	---	---	Composite	---
Ethylbenzene	380	ppb	Instantaneous	142
MTBE (Methyl-Tert-Butyl-Ether)	50	ppb	Instantaneous	---
Naphthalene	47	ppb	Composite	19
Phenol	---	---	Composite	---
Tetrachloroethylene (Perc)	20	ppb	Instantaneous	---
Toluene	74	ppb	Instantaneous	28
1,2,4 Trichlorobenzene	---	---	Composite	---
1,1,1 Trichloroethane	---	---	Composite	---
Xylenes (Total)	74	ppb	Instantaneous	28
PCB's (Total)[3]	1	ppb	Composite	---
Total Suspended Solids (TSS)	350[4]	mg/l	Instantaneous	---
CBOD[5]	---	---	Composite	---
Chloride[5]	---	---	Instantaneous	---

Total Nitrogen[5]	---	---	Composite	---
Total Solids[5]	---	---	Instantaneous	---

1 All handling and preservation of collected samples and laboratory analyses of samples shall be performed in accordance with 40 C.F.R. pt. 136. If 40 C.F.R. pt. 136 does not cover the pollutant in question, the handling, preservation, and analysis must be performed in accordance with the latest edition of "Standard Methods for the Examination of Water and Wastewater." All analyses shall be performed using a detection level less than the lowest applicable regulatory discharge limit. If a parameter does not have a limit, then the detection level is defined as the least of the Practical Quantitation Limits identified in NYSDEC's Analytical Detectability and Quantitation Guidelines for Selected Environmental Parameters, December 1988

2 Analysis for ***non-polar materials*** must be done by EPA method 1664 Rev. A. Non-Polar Material shall mean that portion of the oil and grease that is not eliminated from a solution containing N–Hexane, or any other extraction solvent the EPA shall prescribe, by silica gel absorption.

3 Analysis for PCB=s is required if ***both*** conditions listed below are met:
1) if proposed discharge ≥ 10,000 gpd;
2) if duration of a discharge > 10 days.
Analysis for PCB=s must be done by EPA method 608 with MDL=<65 ppt. PCB's (total) is the sum of PCB-1242 (Arochlor 1242), PCB-1254 (Arochlor 1254), PCB-1221 (Arochlor 1221), PCB-1232 (Arochlor 1232), PCB-1248 (Arochlor 1248), PCB-1260 (Arochlor 1260) and PCB-1016 (Arochlor 1016).

4 For discharge ≥ 10,000 gpd, the TSS limit is 350 mg/l. For discharge < 10,000gpd, the limit is determined on a case by case basis.

5 Analysis for Carbonaceous Biochemical Oxygen Demand (CBOD), Chloride, Total Solids and Total Nitrogen are required if proposed discharge ≥ 10,000 gpd.

ATTACHMENT 2: APPLICABLE REGULATIONS

Applicable regulations include, but are not limited to:

1. 49 CFR 100 to 179 - DOT Hazardous Materials Transport and Manifest System Requirements
2. New York State Department of Environmental Conservation (DEC), Spills Technology and Remediation Series (STARS) Memo #1
3. 6 NYCRR 360-1 DEC Solid Waste Management Facilities
4. 6 NYCRR 364- Waste Transporter permits
5. Local restrictions on transportation of waste/debris
6. 40 CFR 260 to 272 - Hazardous Waste Management (RCRA)
7. 6 NYCRR 371 - Identification and Listing of Hazardous Wastes
8. 6 NYCRR 372 - Hazardous Waste Manifest System and Related Standards for Generators, Transporters and Facilities
9. 6 NYCRR 373-1 - Hazardous Waste Treatment, Storage and Disposal Facility Permitting Requirements
10. 6 NYCRR 376 - Land Disposal Restrictions
11. Posted weight limitations on roads or bridges
12. Transportation Skills Programs, Inc. 1985 - Hazardous Materials and Waste Shipping Papers and Manifests
13. Other local restrictions on transportation of waste/debris
14. Occupational Safety and Health Administration (OSHA), Standards and Regulations, 29 CFR 1910 (General Industry)
15. OSHA 29 CFR 1910.120 Hazardous Waste Operations and Emergency Response
16. OSHA Safety and Health Standards 29 CFR 1926 (Construction Industry)
17. OSHA 29 CFR 1910.146 Confined Space Entry Standard
18. Standard Operating Safety Guidelines, EPA Office of Emergency and Remedial Response Publication, 9285.1-03
19. NIOSH / OSHA / USCG / EPA Occupational Safety and Health Guidance Manual for Hazardous Waste Site Activities (1986)
20. U.S. Department of Health and Human Services (DHHS) "NIOSH Sampling and Analytical Methods," DHHS (NIOSH) Publication 84-100
21. ANSI, Practice for Respiratory Protection, Z88.2 (1980)
22. ANSI, Emergency Eyewash and Shower Equipment, Z41.1 (1983)
23. ANSI, Protective Footwear, Z358.1 (1981)
24. ANSI, Physical Qualifications for Respirator Use, Z88.6 (1984)
25. ANSI, Practice for Occupational and Educational Eye and Face Protection, Z87.1 (1968)
26. Water Pollution Control Federation "Manual of Practice No. 1, Safety in Wastewater Works"

27. NFPA No. 327 "Standard Procedures for Cleaning and Safeguarding Small Tanks and Containers"
28. Occupational Safety and Health Act Confined Space Entry Standard 29 CFR 1910.146.87
29. Department of Transportation 49 CFR 100 through 179
30. Department of Transportation 49 CFR 387 (46 FR 30974, 47073)
31. Environmental Protection Agency 40 CFR 136 (41 FR 52779)
32. Environmental Protection Agency 40 CFR 262 and 761
33. Resource Conservation and Recovery Act (RCRA)
34. Any transporter of hazardous or non-hazardous materials shall be licensed in the State of New York and all other states traversed in accordance with all applicable regulations.

ATTACHMENT 3: DEFINITIONS

Contaminated Groundwater and Decontamination Fluids: Groundwater within the excavation trench or decontamination water that contains regulated compounds above the NYCDEP Discharge to Sanitary/Combined Sewer Effluent limits.

Disposal or Treatment Facility: A facility licensed to accept either non-hazardous regulated waste or hazardous waste for either treatment or disposal.

Exclusion Zone: Work area that will be limited to access by Contractor personnel specifically trained to enter the work area only. The exclusion zone will be set up to secure the area from the public and untrained personnel. The project health and safety program will apply to all construction personnel including persons entering the work area.

Hazard Assessment: An assessment of any physical hazards that may be encountered on a work site.

Hazardous Soils: Soils that exhibit any of the characteristics of a hazardous waste, namely ignitability, corrosivity, reactivity, and toxicity, as defined in 6 NYCRR Part 371, Section 371.3 and 40 CFR Section 261.

Hazardous Substance Evaluation: An evaluation of the possible or known presence of any hazardous substances that may be encountered on a job site. This evaluation is included in the Health and Safety Plan and will include the identification and description of any hazardous substances expected to be encountered. Material Safety Data Sheets (MSDS) will be included for each substance.

Health and Safety Plan: A plan employed at a work site that describes all the measures that will be taken to assure that all work is conducted in a safe manner, and that the health of the workers and the public will be insured.

Material Handling Plan: A plan outlining the methods that will be employed to handle, transport and dispose of contaminated materials.

Non-Hazardous Contaminated Soils: Soils which exhibit a distinct chemical or petroleum odor, or exhibit elevated photoionization detector readings but are not classified as hazardous waste under 6 NYCRR Part 371, Section 371.3 and 40 CFR Section 261.

New York State Health Department's Environmental Laboratory Approval Program: A program by which the state of New York approves and accredits environmental testing laboratories.

PCBs: Polychlorinated biphenyls are a group of toxic compounds commonly used as a coolant in transformers and other electrical components.

Photoionization Detector: A hand held instrument used to measure volatile organic compounds in air. The instrument ionizes the organic molecules through the use of an ultraviolet lamp.

RCRA Hazardous Waste Characteristics: Characteristics of a material which may indicate the material is hazardous. These include: ignitability corrosivity, reactivity, and toxicity.

Total Petroleum Hydrocarbons: An analytical procedure used to determine the total amount of petroleum compounds in a material.

ATTACHMENT 4: PHASE II SUBSURFACE CORRIDOR INVESTIGATION REPORT

- Final -

Phase II Subsurface Corridor Investigation Report

For

Replacement of 72" Trunk Water Main in Flatbush Avenue

Flatbush Avenue between Park Place and 8th Avenue

Brooklyn, New York

DDC PROJECT NO. BED798

WORK ORDER NO. 11373-LIRO-3-10798

CONTRACT REGISTRATION NO. 20151405569

Prepared for:

Department of Design and Construction

Office of Environmental and Geotechnical Services

30-30 Thomson Avenue, Third Floor

Long Island City, New York 11101

Prepared by:

LiRo Engineers, Inc.

703 Lorimer Street

Brooklyn, New York 11211

PROJECT NO. 15-008-0265

October 10, 2016

TABLE OF CONTENTS

EXECUTIVE SUMMARY **ES-1**

1.0 INTRODUCTION **1**
1.1 SUMMARY OF PREVIOUS ENVIRONMENTAL INVESTIGATIONS 1
1.2 SCOPE OF WORK 7

2.0 CORRIDOR INFORMATION **9**
2.1 CORRIDOR LOCATION, DESCRIPTION AND USE 9
2.2 DESCRIPTION OF SURROUNDING PROPERTIES 9
2.3 CORRIDOR AND REGIONAL TOPOGRAPHIC SETTING 9
2.4 CORRIDOR AND REGIONAL GEOLOGY 9
2.5 CORRIDOR AND REGIONAL HYDROGEOLOGY 10

3.0 CORRIDOR EVALUATION **12**
3.1 SOIL QUALITY INVESTIGATION 12
3.2 GROUNDWATER QUALITY INVESTIGATION 14
3.3 LABORATORY ANALYSES 14
3.4 DATA EVALUATION 14

4.0 FINDINGS **16**
4.1 FIELD SCREENING 16
4.2 SOIL AND GROUNDWATER LABORATORY ANALYTICAL RESULTS 16
4.2.1 Volatile Organic Compounds (VOCs) in Soil 16
4.2.2 Polycyclic Aromatic Hydrocarbons (PAHs) in Soil 16
4.2.3 Polychlorinated Biphenyls (PCBs) in Soil 16
4.2.4 Toxicity Characteristic Leaching Procedure (TCLP) Resource Conservation and Recovery Act (RCRA) Metals in Soil 16
4.2.5 Waste Characterization of Soil 17

5.0 CONCLUSIONS AND RECOMMENDATIONS **18**
6.0 STATEMENT OF LIMITATIONS **20**

Tables
1 Summary of Environmental Boring Data
2 Summary of TCL VOCs Detected in Soil
3 Summary of PAHs Detected in Soil
4 Summary of PCBs Detected in Soil
5 Summary of Waste Characterization in Soil

Figures
1 Topographic Corridor Location Map
2 Sample Location Plan

Appendices
A Boring Location Sketches
B Geologic Boring Logs
C Laboratory Analytical Results – Included on Attached CD

EXECUTIVE SUMMARY

On behalf of the New York City Department of Design and Construction (DDC), LiRo Engineers, Inc. (LiRo) conducted a Phase II Subsurface Corridor Investigation (Phase II SCI) of the BED798 Corridor located on Flatbush Avenue between Park Place and 8th Avenue (the "Corridor"). The Corridor is located in the Park Slope neighborhood of Brooklyn, New York. Excavation for the replacement of the 72-inch water main and combined sewers is proposed along the Corridor. Based on the review of the available information provided by the DDC, the proposed depth of excavation ranges from 10 to 20 feet below grade (ftbg) with an average depth at 10 ftbg. The Phase II SCI was conducted to determine if the Corridor's environmental condition would impact proposed construction activities.

The Corridor is approximately 1.55-mile (8,184-foot) long and is comprised of the following street segments:

Street Segments	Length (mile)
Flatbush Avenue between Park Place and 8th Avenue	0.14
St. John's Place between 5th Avenue and Flatbush Avenue	0.47
Park Place between 5th Avenue and 6th Avenue	0.15
Baltic Street between 4th Avenue and 5th Avenue	0.15
Douglass Street between 4th Avenue and 5th Avenue	0.15
6th Avenue between Park Place and Union Street	0.25
8th Avenue between Lincoln Place and Flatbush Avenue	0.07
Butler Street between 4th Avenue and Baltic Street	0.17

LiRo prepared a Phase I Corridor Assessment Report (CAR) dated March 9, 2016. It identified 19 sites that had a potential "High" risk and 79 sites that had a potential "Moderate" risk to impact the subsurface (soil and/or groundwater) of the Corridor and recommended the performance of a Phase II SCI. The Phase II SCI was performed between August 29, 2016 and September 12, 2016 and consisted of the following components:

- The advancement of 19 borings to terminal depths as follows:
    - SB-01 through SB-07, SB-10 through SB-14, and SB-20 – 15 ftbg (SB-14 encountered refusal due to large rocks and/or concrete pieces);
    - SB-08 – 13 ftbg (refusal due to large rocks and/or concrete pieces);
    - SB-09 – 10 ftbg (refusal due to large rocks and/or concrete pieces);
    - SB-15 – 9.5 ftbg (refusal due to large rocks and/or concrete pieces); and,
    - SB-16 through SB-18 – 18 ftbg;

- Field screening of soil samples, including photo-ionization detector (PID) readings and visual and olfactory indicators of contamination (staining, odors);

- The collection of 38 soil samples which were analyzed for the following parameters: (1) United States Environmental Protection Agency (USEPA) Target Compound List (TCL) volatile organic compounds (VOCs); (2) Polycyclic Aromatic Hydrocarbons (PAHs); (3) TCL polychlorinated biphenyls (PCBs); (4) Total Petroleum Hydrocarbon Diesel Range Organics/Gasoline Range Organics (TPHC DRO/GRO); (5) Resource Conservation and Recovery Act (RCRA) Characteristics; and/or, (6) Toxicity Characteristic Leaching Procedure (TCLP) RCRA Metals; and,

- The preparation of this report, which includes tables summarizing the laboratory analytical results and figures depicting boring locations, significant site features and, if applicable, contamination occurrence and distribution.

Since groundwater was not encountered during the Phase II SCI, no groundwater samples were collected.

In order to evaluate the subsurface soil quality, laboratory analytical results were compared with the regulatory standards identified in (1) New York State Department of Environmental Conservation (NYSDEC) Subpart 375-6: Remedial Program Unrestricted and Restricted Use (Track 1 and Track 2) Soil Cleanup Objectives (SCOs); (2) NYSDEC CP-51 Soil Cleanup Levels (SCLs) which include Supplemental Soil Cleanup Objectives (SSCOs) to NYSDEC Subpart 375-6 and SCLs for gasoline/fuel oil contaminated soil; and/or, (3) Toxicity Characteristic Regulatory Levels for Hazardous Waste published in RCRA and 6 New York Codes, Rules and Regulation (NYCRR) Part 371.

The subsurface soils encountered during this Phase II SCI consisted predominantly of light brown, reddish brown, and dark brown fine to medium sand with some clay, silt, and gravel from grade to 18 ftbg. Man-made materials, which are indicative of urban fill, were encountered throughout the Corridor at depths ranging from 0.5 to 18 ftbg. Groundwater was not encountered within any of the on-site borings. Bedrock was not encountered during the Phase II SCI. However, refusal was met within four (4) of the on-site borings due to large rocks and/or concrete pieces.

Field screening (i.e., PID readings and visual and olfactory observations) did not identify impacted soils within the Corridor.

VOCs, including acetone and methylene chloride, were detected in 17 of the 19 grab samples collected. Acetone was detected at a concentration exceeding the Unrestricted Use (Track 1) SCO in one (1) of the grab samples collected (SB-07). Acetone, which was detected in 12 additional samples below applicable standards, is a common laboratory cross contaminant and is most likely not representative of subsurface conditions. Methylene chloride, which is also a common laboratory cross contaminant, was detected below applicable standards in nine (9) of the 19 grab samples collected. PAHs, including anthracene, benzo(a)anthracene, benzo(k)fluoranthene, chrysene, fluoranthene, phentanthrene, and/or pyrene, were detected in three (3) of the 19 composite samples collected at concentrations below their corresponding Unrestricted Use (Track 1) and Restricted Use (Track 2) SCOs and CP-51 SCLs in SB-02, SB-04, and SB-05. One (1) PCB, aroclor 1254, was detected in one (1) of the 19 composite samples collected at a concentration below the corresponding Unrestricted Use (Track 1) and Restricted Use (Track 2) SCO and CP-51 SCL in SB-06. TCLP RCRA metals, including arsenic, barium, chromium, lead, and selenium, were detected in all 19 composite samples collected at concentrations below their corresponding 6 NYCRR Part 371 and RCRA standards.

Ignitability (flash point), reactivity (cyanide and sulfide), and corrosivity (pH) were within the acceptable RCRA ranges. TPHC-DRO were detected at concentrations ranging from approximately 14.4 mg/kg to 61 mg/kg in 11 of the 19 samples collected. TPHC-GRO were not detected in any of the 19 samples collected. There are no regulatory standards for TPHC-DRO and TPHC-GRO.

Conclusions and Recommendations

Based on the evaluation of the field screening data and the laboratory analytical results, and a comparison to applicable regulatory standards, the following conclusions are presented:

- Field screening (i.e., PID readings and visual and olfactory observations) did not identify any petroleum-impacted soils within the Corridor;

- Laboratory analytical results identified TPHC-DRO impacted soils throughout the Corridor. The presence of TPHC-DRO in subsurface soils may be attributed primarily to: (a) residuals from releases of petroleum products in the vicinity of the Corridor; and/or, (b) contaminants in historic fill material placed on the Corridor;

- The subsurface soil samples collected from the Corridor did not exhibit hazardous waste characteristics;

- Since groundwater was not encountered, no groundwater samples were collected; and,

- Based on the Phase II SCI Work Plan prepared by LiRo and dated August 9, 2016, a total of 20 soil borings were proposed to be advanced along the Corridor. However, soil boring SB-19 was canceled due to the presence of underground utilities. In addition, four (4) temporary well points (TWPs) were proposed to be installed; however, since groundwater was not encountered within any of the 19 soil borings advanced, no TWPs were installed. Due to SB-19 not being installed and groundwater not being sampled, the portion of the Corridor along Flatbush Avenue between Sterling Place and 8th Avenue could not be evaluated. The potential exists for localized areas of impact within those areas.

Based on the results of the field investigation and laboratory analytical results, LiRo recommends the following:

- The Contract documents should identify provisions and a contingency for managing, handling, transporting and disposing of contaminated, non-hazardous soil. The Contractor should be required to submit a Material Handling Plan, to identify the specific protocol and procedures that will be employed to manage the waste in accordance with applicable regulations;

- Due to the presence of TPHC-DRO along the investigated Corridor areas, dust control procedures are recommended during excavation activities to minimize the creation and dispersion of fugitive airborne dust. The Contractor may implement dust control measures to minimize potential of migrating fugitive airborne contaminants released as a direct result of construction activities;

- Groundwater was not encountered during the Phase II SCI activities and, therefore, dewatering may not be required. However, should dewatering become necessary during construction activities within the Corridor, the contractor should be required to obtain New York City Department of Environmental Protection (NYCDEP) sewer discharge permit. If discharge into surface waters or storm sewers is required during dewatering, it may be done under the appropriate NYSDEC State Pollutant Discharge Elimination System (SPDES) permit. Additional sampling and laboratory analysis may be required to satisfy NYSDEC requirements prior to discharge into storm sewers; and,

- Before beginning any excavation activity, the contractor shall submit a Corridor-specific health and safety plan (HASP) that will meet the requirements set forth by the Occupational, Safety and Health

Administration (OSHA), the New York State Department of Health (NYSDOH) and any other applicable regulations. The HASP should identify the possible locations and risks associated with the potential contaminants that may be encountered, and the administrative and engineering controls that will be utilized to mitigate concerns (i.e., dust control procedures).

1.0 INTRODUCTION

On behalf of the New York City Department of Design and Construction (DDC), LiRo Engineers, Inc. (LiRo) conducted a Phase II Subsurface Corridor Investigation (Phase II SCI) of the BED798 Corridor located on Flatbush Avenue between Park Place and 8th Avenue (the "Corridor"). The Corridor is located in the Park Slope neighborhood of Brooklyn, New York. Excavation for the replacement of the 72-inch water main and combined sewers is proposed along the Corridor. Based on the review of the available information provided by the DDC, the proposed depth of excavation ranges from 10 to 20 feet below grade (ftbg) with an average depth at 10 ftbg. The Phase II SCI was conducted to determine if the Corridor's environmental condition would impact proposed construction activities.

The Corridor is approximately 1.55-mile (8,184-foot) long and is comprised of the following street segments:

Street Segments	Length (mile)
Flatbush Avenue between Park Place and 8th Avenue	0.14
St. John's Place between 5th Avenue and Flatbush Avenue	0.47
Park Place between 5th Avenue and 6th Avenue	0.15
Baltic Street between 4th Avenue and 5th Avenue	0.15
Douglass Street between 4th Avenue and 5th Avenue	0.15
6th Avenue between Park Place and Union Street	0.25
8th Avenue between Lincoln Place and Flatbush Avenue	0.07
Butler Street between 4th Avenue and Baltic Street	0.17

1.1 Summary of Previous Environmental Investigations

LiRo prepared a Phase I Corridor Assessment Report (Phase I CAR) dated March 9, 2016, which presented the results of a survey conducted along the Corridor to assess the presence of potential sources of subsurface contamination within and in the immediate vicinity of the Corridor. The survey also included a review of fire insurance maps to document historical use and a limited review of the New York State databases to identify sites that are known to be environmental concern.

The Phase I CAR identified 19 sites that had a Final "High" risk and 79 sites that had a Final "Moderate" risk to impact the subsurface of the Corridor and recommended advancing borings, installing temporary well points, and collecting soil and groundwater samples to assess potential impacts.

"High" Risk Sites:

No.	Facility Name	Address	Map ID
1	Former Gas Station, Underground Storage Tank (UST) Site, E Designation Site, Closed Leaking Tank (LTANK) Site, and Closed NY Spill Site (currently a residential building)	126-136 4th Ave. and 598-604 Baltic St.	H1

"High" Risk Sites:

No.	Facility Name	Address	Map ID
2	Former Auto Repair Facility, Radiator Repair Facility, and Possible Dry Cleaners (currently an active construction site)	109-113 4th Ave. and 609-615 Baltic St.	H2
3	Former Dry Cleaners (currently Key Food Market and parking lot)	120 5th Ave.	H3
4	Former Machine Shop (currently Ponce Funeral Homes)	162 4th Ave. and 337-345 Douglass St.	H4
5	BP Gas Station	164-178 4th Ave. and 334-344 Douglass St.	H5
6	Former Elevator Manufacturer (currently a residential building)	383 Douglass St.	H6
7	Former Manufacturing Facility and Elevator Factory (currently a residential building)	407 Douglass St.	H7
8	Former Auto Repair Facility (currently Los Pollitos Mexican Restaurant and apartments)	148 5th Ave. and 412-416 Douglass St.	H8
9	Former Dry Cleaning Facility (currently G Laundry)	131 6th Ave.	H9
10	UST Site and Closed LTANK Site (currently American Apparel)	312-316 Flatbush Ave.	H10
11	Historic Auto Facility and Dry Cleaners (currently a barber shop)	172-176 Park Pl.	H11
12	Golden Touch Cleaners	326-328 Flatbush Ave.	H12
13	Former Car Sales Facility with One (1) Gas Tank (currently Key Food Market)	369-373 Flatbush Ave.	H13
14	Former Garage with One (1) Gas Tank (currently the Brooklyn Kidney Center and likely apartments)	184 Sterling Pl.	H14
15	Former Garage and Auto Repair Facility (currently North Unit)	342-344 Flatbush Ave.	H15
16	Four Seasons Cleaners and apartments	381-395 Flatbush Ave. and 186-192 Sterling Pl.	H16
17	Former Garage with One (1) Gas Tank (currently M&T Bank)	243-247 St. Johns Pl.	H17
18	Former Dry Cleaners (currently a gift shop and likely apartments)	152 5th Ave.	H18
19	Former Dry Cleaners (currently a residential building identified as "The Gardenia"	99-105 4th Ave. and 628-644 Warren St.	H19

"Moderate" Risk Sites:

No.	Facility Name	Address	Map ID
1	Former Tobacco Blending and Cigarette Manufacturer (currently School No. 133)	606-620 Baltic St. and 115-119 4th Ave.	M1
2	Aboveground Storage Tank (AST) Site (currently a church)	62 Park Pl.	M2
3	Former Undertaker (currently a residential building)	121-123 6th Ave.	M3
4	Closed NY Spill Site (currently an intersection)	6th Ave. and St. Johns Pl.	M4
5	AST Site (currently the Park Slope Elementary School)	180 6th Ave.	M5
6	AST Site (currently a church)	186 St. Johns Pl.	M6
7	Closed NY Spill Site (currently an intersection)	Flatbush Ave. and Park Pl.	M7
8	Closed NY Spill Site (currently an intersection)	Flatbush Ave. and Sterling Pl.	M8
9	AST Site (currently a residential building)	10 Plaza St. East	M9
10	AST Site (currently a residential building)	25 8th Ave.	M10
11	Former Manufacturing Facility and Garage/Auto Repair Facility with One (1) Gas Tank	587-599 Baltic St.	M11
12	Former Photo Facility (currently a residential building)	104-106 4th Ave. and 620-626 Warren St.	M12
13	Formerly Knickerbocker Toy Co., Inc. and Street Cleaning Department (currently townhouses)	397-427 Butler St.	M13
14	Formerly the Lane Show Factory (currently Polish Nail Space and apartments)	113-117 5th Ave.	M14
15	Historic Auto Facility (currently a medical office)	153 4th Ave.	M15
16	Former Manufacturing Facility and Cabinet Works (currently townhouses)	352-364 Butler St.	M16
17	Former Metal Goods Manufacturer (currently townhouses)	366-386 Butler St.	M17
18	Economy Cleaners, Closed LTANK Site, and Closed NY Spill Site	123 5th Ave.	M18
19	Former Garage with One (1) Gas Tank (currently Sterling Place Garage – parking)	87 Sterling Pl.	M19
20	Historic Cleaners (currently a commercial and residential building)	219 6th Ave.	M20

"Moderate" Risk Sites (continued):

No.	Facility Name	Address	Map ID
21	Former Garage with Two (2) Gas Tanks and Borden Co./Borden Farm Products Co./Bordens Condensed Milk Co./Depot of NY Condensed Milk Co. with Two (2) Gas Tanks (currently a residential building)	98-112 Sterling Pl.	M21
22	UST Site and Closed LTANK Site (currently the Berkeley Carroll School)	152-156 Sterling Pl.	M22
23	Closed NY Spill Site (A few Large Releases) (currently an intersection)	7th Ave. and Flatbush Ave.	M23
24	Historic Cleaners (currently Lapelstat Real Estate and apartments)	323 Flatbush Ave.	M24
25	UST Site and Closed LTANK Site (currently a residential building)	210-214 Sterling Pl.	M25
26	UST Site and Closed LTANK Site (currently a residential building)	25 Plaza St.	M26
27	Closed Spill Site (A Large Release) (currently a residential building)	48-10 8th Ave. (assumed to be 48 8th Ave.)	M27
28	UST Site (currently a residential building)	234 Lincoln Pl.	M28
29	Former Manufacturing Facility and Garage with One (1) Gas Tank (currently an active construction site)	610-618 Warren St.	M29
30	UST Site, Closed LTANK Site, Closed NY Spill Site, Historic Auto Facility (currently a residential building)	572 Warren St. and 583 Baltic St.	M30
31	Former Manufacturing Facility (currently an active construction site)	577-579 Baltic St.	M31
32	Formerly Family Dry Cleaners (currently a residential building)	95-04 4th Ave.	M32
33	Formerly Metropolitan Tobacco Co. (currently a residential building)	649-661 Warren St.	M33
34	Historic Cleaners (currently Hiroto Sushi, BKLN Juice, and apartments	75 5th Ave.	M34
35	Former Manufacturing Facility with One (1) Gas Tank and Former Garage with One (1) Gas Tank (currently multiple auto related businesses)	324-330 Butler St.	M35
36	Lorenzutti Motors	330 Douglass St.	M36
37	Formerly Rinaldi Recycling Co. (currently Insa Japanese Restaurant)	326 Douglass St.	M37
38	Formerly Rinaldi Recycling Co. (currently DanceWave Dance Studio)	182 4th Ave.	M38

"Moderate" Risk Sites (continued):

No.	Facility Name	Address	Map ID
39	Former Machine Shop (currently a residential building)	90 Park Pl.	M39
40	Former Garage with One (1) Gas Tank (currently a residential building identified as "Sterling Atrium")	109-113 Sterling Pl.	M40
41	Former Garage with One (1) Gas Tank (currently a residential building identified as "The Atrium")	115-117 Sterling Pl.	M41
42	Former Garage with Two (2) Gas Tanks (currently a residential building)	119-123 Sterling Pl.	M42
43	Former Undertaker (currently a residential building identified as "The Vermeil")	24 7th Ave. and 133-139 Sterling Pl.	M43
44	E Designation (UST) Site (currently American Kinetics Lab and apartments)	87 4th Ave.	M44
45	Former Manufacturing Facility and Historic Cleaners (currently a vacant dry cleaners and apartments)	79-85 4th Ave. and 68-78 St. Marks St.	M45
46	Former Tire Service Center (currently a vacant commercial storefront and apartments)	88 4th Ave.	M46
47	Happy Cleaners and Apartments	86 4th Ave.	M47
48	UST and AST Site (currently Building Supplies and Seafood Depot)	620-628 Degraw St.	M48
49	UST Site (currently National)	617 Sackett St.	M49
50	Formerly Jacob Mergenthaler's Sons – Sash, Door, and Blind Manufacturer (currently a residential building)	663-679 Sackett St.	M50
51	Arecibo Car Service, a Deli, and Apartments	170 5th Ave.	M51
52	Former Dry Cleaners (currently Perfect Potato and apartments)	174 5th Ave.	M52
53	Former Auto Repair Facility, Metal Works, and Electro Plating (currently a residential building with a garage)	709 Sackett St.	M53
54	Happy Cleaners and Apartments	182 5th Ave.	M54
55	UST Site (currently Saint Francis Xavier School)	752 President St.	M55
56	Former Battery Service Center with One (1) Gas Tank and Garage (currently a commercial or residential building with a garage)	813-815 Union St.	M56

"Moderate" Risk Sites (continued):

No.	Facility Name	Address	Map ID
57	UST Site, Historic Auto Facility, and Open LTANK (currently a residential building identified as the "Phoenix House")	174 Prospect Pl.	M57
58	Former Dry Cleaners (currently Active Rehab –shoe repair)	248 Flatbush Ave.	M58
59	Former Dry Cleaners (currently Checks Cashed and apartments)	236 Flatbush Ave.	M59
60	Dry Cleaners and Shoe Repair	281 Flatbush Ave.	M60
61	UST Site (currently a Bar/Grill and apartments)	295 Flatbush Ave.	M61
62	Historic Cleaners (currently Sherwin Williams)	313 Butler St.	M62
63	Historic Cleaners (currently Brooklyn Hardware and apartments)	66 5th Ave.	M63
64	Historic Cleaners (currently Life Boutique Thrift and apartments)	82 5th Ave.	M64
65	Former Dry Cleaners (currently Amesly Realty Management and apartments)	57 5th Ave.	M65
66	Formerly Kim's Eden Dry Cleaners (currently AREA Bagels)	55-23 5th Ave.	M66
67	UST Site, NY Spill Site (One [1] Open, Multiple Closed), Closed LTANK Site, and Historic Auto Facility (currently Speedway Gas Station)	204-222 4th Ave.	M67
68	Former Auto Repair Facility (currently Bend and Bloom Yoga)	708 Sackett St.	M68
69	Historic Dry Cleaners (currently "Something Else" gift shop and apartments)	187 5th Ave.	M69
70	Former Lacquer Canning Facility (currently "Wild Was Mama" shop and apartments)	464 Bergen St.	M70
71	Historic Auto Facility with One (1) Gas Tank (currently a residential building with a garage)	710 Carroll St.	M71
72	Former Sheet Metal Works Facility and Garage with One (1) Gas Tank and Open NY Spill Site (currently a medical office)	794-796 Union St.	M72
73	Former Loft/Garage with up to Four (4) Gas Tanks (currently PS Yoga)	837-839 Union St.	M73
74	Historic Auto Facility (currently Union Beauty and apartments)	849 Union St.	M74

"Moderate" Risk Sites (continued):

No.	Facility Name	Address	Map ID
75	Former Manufacturing Facility, Rug Cleaner, and Motor Manufacturer (currently Park Slope Food Coop)	780-786 Union St.	M75
76	Former Garage with Three (3) Gas Tanks (currently an industrial building)	841-845 Union St.	M76
77	Eco Cleaners	86 7th Ave.	M77
78	Economy Cleaners and Apartments	79-81 7th Ave.	M78
79	Former Dry Cleaners (currently Simple Nails and apartments)	85 7th Ave.	M79

1.2 Scope of Work

The Phase II SCI consisted of a field investigation, laboratory analyses, and the preparation of this report, which includes tables summarizing the laboratory analytical results and figures depicting boring locations, significant site features and, if applicable, contamination occurrence and distribution. Drilling activities for the field investigation were performed by Associated Environmental Services, Limited (AES) of Hauppauge, New York. Oversight of drilling activities was performed by LiRo. Laboratory analyses were provided by York Analytical Laboratory, Inc. (York) of Stratford, Connecticut, a NYS Department of Health (NYSDOH) approved laboratory (No. 10854). Field derived Quality Assurance/Quality Control (QA/QC) samples (i.e., field blanks, trip blanks, and duplicates) were not collected for this project. The field investigation was conducted from August 29, 2016 through September 12, 2016 and consisted of the following components.

- The advancement of 19 borings to terminal depths as follows:
  - SB-01 through SB-07, SB-10 through SB-14, and SB-20 – 15 ftbg (SB-14 encountered refusal due to large rocks and/or concrete pieces);
  - SB-08 – 13 ftbg (refusal due to large rocks and/or concrete pieces);
  - SB-09 – 10 ftbg (refusal due to large rocks and/or concrete pieces);
  - SB-15 – 9.5 ftbg (refusal due to large rocks and/or concrete pieces); and,
  - SB-16 through SB-18 – 18 ftbg;

- It should be noted that based on the Phase II SCI Work Plan prepared by LiRo and dated August 9, 2016, a total of 20 soil borings were proposed to be advanced along the Corridor. However, soil boring SB-19 was canceled due to the presence of underground utilities.

- The borings were advanced using a GeoProbe direct push drill rig. Prior to direct push advancement, borings were cleared to a depth of 6 feet using a hand auger and/or a vacuum excavator (Vacex). Soil samples were collected using 5-foot long, 2-inch diameter Macro Core stainless steel samplers equipped with polyvinyl chloride (PVC) liners. In addition, a Health and Safety Plan was prepared prior to commencing field work.

- Field screening, classification, and identification of soils from the ground surface to the bottom of each boring. Soil samples were visually classified in the field using the Unified Soil Classification System (USCS). Field screening consisted of visual and olfactory indicators of impacts as well as screening with a photoionization detector (PID).

- The collection of one (1) composite and one (1) grab sample from the 19 soil boring locations (SB-01 through SB-18, and SB-20). The composite samples were comprised of soil from the entire boring column. The grab samples were collected from the bottom 6-inch interval in each boring.

- Laboratory analysis of the composite samples for: (1) Polycyclic Aromatic Hydrocarbons (PAHs) via United States Environmental Protection Agency (USEPA) Method 8270C; (2) Polychlorinated Biphenyls (PCBs) via USEPA Method 3550B/8082; (3) Total Petroleum Hydrocarbon Diesel Range Organics/Gasoline Range Organics (TPHC DRO/GRO) via USEPA Method 8015B; (4) Resource Conservation and Recovery Act (RCRA) Characteristics via USEPA SW-846; and, (5) Toxicity Characteristic Leaching Procedure (TCLP) RCRA Metals via USEPA SW-846.

- Laboratory analysis of the grab samples for TCL volatile organic compounds (VOCs) by USEPA Method 8260B.

Since groundwater was not encountered during the Phase II SCI, no groundwater samples were collected.

2.0 CORRIDOR INFORMATION

2.1 Corridor Location, Description and Use

The Corridor is located in the Park Slope section of the Borough of Brooklyn, New York. The Corridor consists of Flatbush Avenue between Park Place and 8th Avenue, which is developed with a paved roadway and existing infrastructure systems.

Adjoining property usage consists primarily of commercial and residential properties. Properties of potential environmental concern noted adjoining the Corridor include a Ponce Funeral Home, BP Gas Station, Golden Touch Cleaners, and Four Seasons Cleaners.

The Corridor is approximately 1.55-mile (8,184-foot) long. A map of the Corridor area is presented as Figures 2A-2C.

2.2 Description of Surrounding Properties

Surrounding property usage consists primarily of commercial and residential properties. Properties of potential environmental concern noted surrounding the Corridor include a number of dry cleaners, auto repair facilities, and a Speedway Gas Station.

2.3 Corridor and Regional Topographic Setting

Based on a review of the United States Geological Survey (USGS) 7.5-Minute Quadrangle Map, Brooklyn, NY, dated 1995, the elevation of the Corridor ranges from approximately 30 feet above mean sea level (msl) by the intersection of Baltic Street and Fourth Avenue to approximately 125 feet above msl by the traffic circle near Plaza Street East and West. The topography of the immediate Corridor area is sloping to the northwest toward the East River. A copy of the topographic map is presented in Figure 1.

2.4 Corridor and Regional Geology

Site and regional geology and hydrogeology are based on information provided in the Geologic Map of New York State (Lower Hudson Sheet) and the USGS "Hydrogeologic Framework of Long Island, New York." Based on these sources, physiographically, Kings and Queens Counties are part of the Long Island Hydrogeologic System. In a roughly north-south cross section, the geology can be characterized as a wedge-shaped layer of Cretaceous and Pleistocene age sedimentary deposits, thickening to the south-southeast. Several impermeable clay layers are located within these sedimentary deposits, generally creating three (3) distinct aquifers. The deep aquifers in southeastern Kings and Queens Counties extend into Nassau and Suffolk Counties and are the sole source of drinking water for Nassau and Suffolk Counties and as such are protected in Kings and Queens Counties. However, the potable water supply for the Corridor comes from the NYC municipal water system which is primarily withdrawn from the Catskills Reservoir in Upstate New York.

Bedrock is of Precambrian and Paleozoic age. The thickness of the unconsolidated sediment ranges from 0 to approximately 1,300 ftbg from north to south. Outcrops of metamorphic bedrock can be found along the northwest portions of Queens. The uppermost unconsolidated unit consists of Pleistocene glacial till and moraine deposits in the northern portions of Queens and Kings Counties and glaciofluvial sediments derived from melt-water of the retreating glaciers to the south. These deposits constitute the Upper Glacial Aquifer.

The Cretaceous age sediments are characterized by three (3) periods of deposition separated by periods of erosion. The lowermost unit, known as the Raritan Formation, was formed by streams and coalescing delta deposits. The formation has been divided into two (2) units, the Lloyd Sand Member and a conformable overlying clay unit (the Raritan Confining Unit).

The Magothy Formation was deposited in an environment dominated by streams and coalescing deltas. The coarse basal unit indicates an environment of high energy that decreases rapidly, resulting in deposition of finer sands and silts that make up the majority of the formation.

Several episodes of Pleistocene glaciation by a southward advance from New England and the Hudson River valley eroded the Cretaceous deposits. The unconformity that extends across most of Queens and Kings Counties between the Cretaceous deposits and the overlying sediments, represents glacial scouring and glaciofluvial activity. Evidence of ice contact with the underlying Cretaceous deposits is absent in the southern portion of Queens and Kings Counties, indicating the southernmost limit of the advancing ice sheets.

The oldest Pleistocene deposit, represented only on western Long Island and Queens and Kings Counties is the Jameco Gravel (Jameco Aquifer). It is a channel filling of gravel and coarse sands which may represent a paleo Hudson River.

The terminal moraine of the last glacial advance is represented by the Harbor Hill Moraine. The Moraine trends southwest to northeast through central Kings and Queens Counties. The moraine deposits consist of poorly sorted silts, clays, sands and boulders and form the topographic highs in the area.

The subsurface soils encountered during this Phase II SCI consisted predominantly of light brown, reddish brown, and dark brown fine to medium sand with some clay, silt, and gravel from grade to 18 ftbg. Man-made materials, which are indicative of urban fill, were encountered throughout the Corridor at depths ranging from 0.5 to 18 ftbg. Bedrock was not encountered during the Phase II SCI.

2.5 Corridor and Regional Hydrogeology

Based on Records of Borings (ROBs) provided by the DDC for subsurface investigation completed in the surrounding area, the depth to groundwater ranges from approximately 20 to 30 ftbg in the westerly end of the Corridor. These ROBs also indicated that groundwater was not encountered within subsurface investigation completed in the easterly portion of the Corridor suggesting that the depth to groundwater is greater than 31 ftbg. Groundwater was not encountered within any of the on-site borings (which extended to various depths up to 18 ftbg) during the LiRo Phase II SCI. The nearest surface water body is Gowanus Canal which is located approximately 0.3 miles east of the Corridor. Based on the topographic map, groundwater flow is anticipated to be towards the northwest. Groundwater depth and flow direction may vary due to seasonal fluctuations in precipitation, local variation in geology, underground structures (i.e., subway tunnels), or local dewatering operations.

According to the United States Fish and Wildlife Service, the Corridor does not fall within a national wetland. The nearest national wetland is located approximately 0.6 miles southeast of the Corridor and is described as a freshwater pond (PUBH) wetland. State mapped wetlands and check zones were not identified through the NYSDEC Wetland Mapper website.

Federal Emergency Management Agency (FEMA) Flood Insurance Rate Maps (FIRM) were accessed from the FEMA website. Map panel 3604970211F (effective September 4, 2007) shows that the entire Corridor is located in Zone X (Area of Minimal Flood Hazard).

3.0 CORRIDOR EVALUATION

Between August 29, 2016 and September 12, 2016, LiRo provided oversight for the advancement of 19 soil borings and the collection of soil samples during the field investigation at the designated areas in the vicinity of the planned construction. While groundwater samples were proposed to be collected, no groundwater was encountered within the 19 soil boring advanced along the Corridor.

The soil samples from the borings were transferred into laboratory supplied sample jars and properly labeled. The samples were stored with ice in a cooler to preserve the samples at 4° Celsius prior to and during shipment. A chain-of-custody was prepared prior to sample shipment. A summary of the field observations, including the location of the sites and the details of the soil borings, is provided in Table 1.

3.1 Soil Quality Investigation

Nineteen (19) borings (SB-01 through SB-18, and SB-20) were advanced to:

- SB-01 through SB-07, SB-10 through SB-14, and SB-20 – 15 ftbg (SB-14 encountered refusal due to large rocks and/or concrete pieces);
- SB-08 – 13 ftbg (refusal due to large rocks and/or concrete pieces);
- SB-09 – 10 ftbg (refusal due to large rocks and/or concrete pieces);
- SB-15 – 9.5 ftbg (refusal due to large rocks and/or concrete pieces); and,
- SB-16 through SB-18 – 18 ftbg;

The borings were advanced using a GeoProbe direct push drill rig. Prior to direct push advancement, borings were cleared to a depth of 6 ftbg using a hand auger and/or a vacuum excavator. Soil samples were collected using 5-foot long, 2-inch diameter Macro Core stainless steel samplers equipped with polyvinyl chloride (PVC) liners. Soil boring locations are shown on Figure 2. The designations and sampling intervals for the samples that were submitted to the laboratory are included in Table 1. Maps depicting each boring location are included in Appendix A. Boring logs are provided in Appendix B. The locations of each boring are described below:

- **SB-01** – Advanced in the vicinity of "High" risk site No. 2 and "Moderate" risk site no. 1 and located on Baltic Street, 177 feet from the east side of 4th Avenue and 5 feet from the south side of Baltic Street.

- **SB-02** – Advanced in the vicinity of "High" risk site No. 3 and located on Baltic Street, 89 feet from the east side of Butler Street and 10 feet from the south side of Baltic Street.

- **SB-03** – Advanced in the vicinity of "Moderate" risk site Nos. 2 and 14 and located on Park Place, 280 feet from the east side of 5th Avenue and 5 feet from the south side of Park Place.

- **SB-04** – Advanced in the vicinity of "Moderate" risk site Nos. 1 and 16 and located on Butler Street, 90 feet from the east side of 4th Avenue and 5 feet from the north side of Butler Street.

- **SB-05** – Advanced in the vicinity of "High" risk site No. 3 and "Moderate" risk site no. 13 and located on Butler Street, 82 feet from the south side of Baltic Street and 7 feet from the east side of Gregory Place.

- **SB-06** – Advanced in the vicinity of "High" risk site Nos. 4 and 5 and "Moderate" risk site no. 15 and located on Douglass Street, 67 feet from the east side of 4th Avenue and 5 feet from the north side of Douglass Street.

- **SB-07** – Advanced in the vicinity of "High" risk site Nos. 6, 7, and 18 and located on Douglass Street, 202 feet from the west side of 5th Avenue and 1 foot from the north side of Douglass Street.

- **SB-08** – Advanced in the vicinity of "High" risk site No. 18 and located on St. Johns Place, 123 feet from the east side of 5th Avenue and 0.5 feet from the south side of St. Johns Place.

- **SB-09** – Advanced in the vicinity of "High" risk site No. 8 and "Moderate" risk site No. 4 and located on St. Johns Place, 105 feet from the west side of 6th Avenue and 4 feet from the south side of St. Johns Place.

- **SB-10** – Advanced in the vicinity of "High" risk site No. 8 and "Moderate" risk site No. 21 and located on St. Johns Place, 107 feet from the east side of 6th Avenue and 3 feet from the south side of St. Johns Place.

- **SB-11** – Advanced in the vicinity of "Moderate" risk site No. 6 and located on St. Johns Place, 107 feet from the west side of 7th Avenue and 4 feet from the south side of St. Johns Place.

- **SB-12** – Advanced in the vicinity of "Moderate" risk site Nos. 6 and 22 and located on St. Johns Place, 70 feet from the east side of 7th Avenue and 4 feet from the south side of St. Johns Place.

- **SB-13** – Advanced in the vicinity of "High" risk site No. 17 and located on St. Johns Place, 49 feet from the west side of 8th Avenue and 4 feet from the south side of St. Johns Place.

- **SB-14** – Advanced in the vicinity of "Moderate" risk site Nos. 2, 3, and 39 and located on 6th Avenue, 42 feet from the south side of Park Place and 5 feet from the west side of 6th Avenue.

- **SB-15** – Advanced in the vicinity of "High" risk site No. 8 and located on 6th Avenue, 69 feet from the south side of Sterling Place and 6 feet from the east side of 6th Avenue.

- **SB-16** – Advanced in the vicinity of "Moderate" risk site No. 4 and located on 6th Avenue, 28 feet from the south side of St. Johns Place and 2 feet from the east side of 6th Avenue.

- **SB-17** – Advanced in the vicinity of "Moderate" risk site No. 5 and located on 6th Avenue, 79 feet from the south side of Lincoln Place and 11 feet from the west side of 6th Avenue.

- **SB-18** – Advanced in the vicinity of "Moderate" risk site Nos. 20 and 56 and located on 6th Avenue, 37 feet from the north side of Union Street and 8 feet from the west side of 6th Avenue.

- **SB-19** – SB-19 was not advanced due to the presence of utilities within close proximity to the proposed location.

- **SB-20** – Advanced in the vicinity of "Moderate" risk site No. 10 and located on 8th Avenue, 89 feet from the north side of Lincoln Place and 3 feet from the east side of 8th Avenue.

Continuous soil samples were collected from each of the borings at 4-foot or 5-foot intervals. Upon sample retrieval, the soils were classified and examined for visual evidence (i.e., staining, discoloration) and any olfactory indications (i.e., odors) of contamination. In addition, a PID was used to screen the soil for VOC vapors. The bowls and utensils used in the sampling procedures are then decontaminated using a deionized water and Alconox soap bath and then rinsed with deionized water.

In order to identify representative conditions relative to the presence of PAHs, PCBs, TPHC DRO/GRO, RCRA Characteristics, and TCLP RCRA metals over the entire soil column in each boring, composite soil samples were collected by mixing the soil from the entire column. Composite samples were collected from all 19 soil borings.

In order to identify representative conditions relative to the presence of VOCs, grab soil samples were collected from the bottom 6-inch interval in all 19 soil borings.

Based on the Phase II SCI Work Plan prepared by LiRo and dated August 9, 2016, a total of 20 soil borings were proposed to be advanced along the Corridor. However, soil boring SB-19 was canceled due to the presence of underground utilities.

3.2 Groundwater Quality Investigation

The Phase II SCI Work Plan also proposed the installation of four (4) temporary well points (TWPs) along the Corridor; however, groundwater was not encountered within any of the 19 soil borings advanced at the time of the Phase II SCI. Therefore, no TWPs were installed and that groundwater samples were not collected.

3.3 Laboratory Analyses

The soil samples were submitted to York Analytical Laboratories, Inc. (York), a NYS Department of Health (NYSDOH) approved laboratory (No. 10854). Field derived Quality Assurance/Quality Control (QA/QC) samples (i.e., field blank, trip blank, duplicate) were not collected for this project. Laboratory analytical reports are included in Appendix C.

The grab soil samples were analyzed for USEPA Target Compound List (TCL) volatile organic compounds (VOCs) by Method 8260B. The composite soil samples were analyzed for: PAHs via USEPA Method 8270C; (2) PCBs via USEPA Method 3550B/8082; (3) TPHC DRO/GRO via USEPA Method 8015B; (4) RCRA Characteristics via USEPA SW-846; and, (5) TCLP RCRA Metals via USEPA SW-846.

3.4 Data Evaluation

In order to evaluate the subsurface soil quality, the laboratory analytical results of the grab and composite soil samples were compared with the regulatory standards identified in: (1) NYSDEC Subpart 375-6: Remedial Program Unrestricted and Restricted Use (Track 1 and Track 2) Soil Cleanup Objectives (SCOs); (2) NYSDEC CP-51 Soil Cleanup Levels (SCLs) which include Supplemental Soil Cleanup Objectives (SSCOs) to NYSDEC Subpart 375-6 and SCLs for gasoline/fuel oil contaminated soil; and/or,

(3) Toxicity Characteristic Regulatory Levels for Hazardous Waste published in RCRA and 6 NYCRR Part 371.

4.0 FINDINGS

This section discusses the analytical data and findings for the activities discussed in Section 3.0. Boring logs can be found in Appendix B. Complete analytical data reports are included in Appendix C.

4.1 Field Screening

Field screening (i.e., PID readings and visual and olfactory observations) did not identify impacted soils within the Corridor. Refer to Table 1 for a summary of environmental boring data.

4.2 Soil and Groundwater Laboratory Analytical Results

4.2.1 Volatile Organic Compounds (VOCs) in Soil

VOCs were detected in 17 of the 19 grab samples collected. Acetone was detected at a concentration exceeding the Unrestricted Use (Track 1) SCO in one (1) of the grab samples collected (SB-07). Acetone, which was detected in 12 additional samples below applicable standards, is a common laboratory cross contaminant and is most likely not representative of subsurface conditions.

Methylene chloride, which is also a common laboratory cross contaminant, was detected below applicable standards in nine (9) of the 19 grab samples collected. Refer to Table 2 for a summary of TCL VOC detections.

4.2.2 Polycyclic Aromatic Hydrocarbons (PAHs) in Soil

PAHs were detected in three (3) of the 19 composite samples collected. Anthracene, benzo(a)anthracene, benzo(k)fluoranthene, chrysene, fluoranthene, phentanthrene, and pyrene were detected at concentrations below their corresponding Unrestricted Use (Track 1) and Restricted Use (Track 2) SCOs and CP-51 SCLs in SB-02, SB-04, and SB-05. Refer to Table 3 for a summary of TCL PAH detections.

4.2.3 Polychlorinated Biphenyls (PCBs) in Soil

One (1) PCB was detected in one (1) of the 19 composite samples collected. Aroclor 1254 was detected at a concentration below the corresponding Unrestricted Use (Track 1) and Restricted Use (Track 2) SCO and CP-51 SCL in SB-06. Refer to Table 4 for a summary of the PCB analysis.

4.2.4 Toxicity Characteristic Leaching Procedure (TCLP) Resource Conservation and Recovery Act (RCRA) Metals in Soil

TCLP RCRA metals were detected in all 19 composite samples collected. Arsenic, barium, chromium, lead, and selenium were detected below their corresponding 6 NYCRR Part 371 and RCRA standards. Based on their consistency, most of the detected metal concentrations may be attributed to background levels. However, some of the detected concentrations for arsenic may be attributed to contaminants in historic fill material placed throughout the Corridor. Refer to Table 5 for a summary of TCLP RCRA metals detections.

4.2.5 Waste Characterization of Soil

Ignitability (flash point), reactivity (cyanide and sulfide), and corrosivity (pH) were within the acceptable RCRA ranges. TPHC-DRO were detected at concentrations ranging from approximately 14.4 mg/kg to 61 mg/kg in 11 of the 19 samples collected. TPHC-GRO were not detected in any of the 19 samples collected. There are no regulatory standards for TPHC-DRO and TPHC-GRO. Analytical results will need to be compared to levels acceptable by the chosen receiving facility to determine appropriate waste Characterization prior to off-site disposal. Refer to Table 5 for a summary of TCLP parameters, RCRA Characteristics, and TPHC DRO/GRO results.

4.2.6 Analysis of NYCDEP Parameters in Groundwater

Since groundwater was not encountered within the soil borings advanced along the Corridor, no groundwater samples were collected.

5.0 CONCLUSIONS AND RECOMMENDATIONS

Based on the evaluation of the field screening data and the laboratory analytical results, and a comparison to applicable regulatory standards, the following conclusions are presented:

- Field screening (i.e., PID readings and visual and olfactory observations) did not identify any petroleum-impacted soils within the Corridor;
- Laboratory analytical results identified TPHC-DRO impacted soils throughout the Corridor. The presence of TPHC-DRO in subsurface soils may be attributed primarily to: (a) residuals from releases of petroleum products in the vicinity of the Corridor; and/or, (b) contaminants in historic fill material placed on the Corridor;
- The subsurface soil samples collected from the Corridor did not exhibit hazardous waste characteristics;
- Since groundwater was not encountered, no groundwater samples were collected; and,
- Based on the Phase II SCI Work Plan prepared by LiRo and dated August 9, 2016, a total of 20 soil borings were proposed to be advanced along the Corridor. However, soil boring SB-19 was canceled due to the presence of underground utilities. In addition, four (4) temporary well points (TWPs) were proposed to be installed; however, since groundwater was not encountered within any of the 19 soil borings advanced, no TWPs were installed. Due to SB-19 not being installed and groundwater not being sampled, the portion of the Corridor along Flatbush Avenue between Sterling Place and 8th Avenue could not be evaluated. The potential exists for localized areas of impact within those areas.

Based on the results of the field investigation and laboratory analytical results, LiRo recommends the following:

- The Contract documents should identify provisions and a contingency for managing, handling, transporting and disposing of contaminated, non-hazardous soil. The Contractor should be required to submit a Material Handling Plan, to identify the specific protocol and procedures that will be employed to manage the waste in accordance with applicable regulations;
- Due to the presence of TPHC-DRO along the investigated Corridor areas, dust control procedures are recommended during excavation activities to minimize the creation and dispersion of fugitive airborne dust. The Contractor may implement dust control measures to minimize potential of migrating fugitive airborne contaminants released as a direct result of construction activities;
- Groundwater was not encountered during the Phase II SCI activities and, therefore, dewatering may not be required. However, should dewatering become necessary during construction activities within the Corridor, the contractor should be required to obtain New York City Department of Environmental Protection (NYCDEP) sewer discharge permit. If discharge into surface waters or storm sewers is required during dewatering, it may be done under the appropriate NYSDEC State Pollutant Discharge Elimination System (SPDES) permit. Additional sampling and laboratory analysis may be required to satisfy NYSDEC requirements prior to discharge into storm sewers; and,

- Before beginning any excavation activity, the contractor shall submit a Corridor-specific health and safety plan (HASP) that will meet the requirements set forth by the Occupational, Safety and Health Administration (OSHA), the New York State Department of Health (NYSDOH) and any other applicable regulations. The HASP should identify the possible locations and risks associated with the potential contaminants that may be encountered, and the administrative and engineering controls that will be utilized to mitigate concerns (i.e., dust control procedures).

6.0 STATEMENT OF LIMITATIONS

The data presented and the opinions expressed in this report are qualified as stated in the attachment to this section of the report.

Report Prepared By:

Amy Hewson
Senior Environmental Analyst

Report Reviewed By:

Stephen Frank
Senior Geologist

Report Reviewed By:

Robert Kreuzer
Project Manager

STATEMENT OF LIMITATIONS

The data presented and the opinions expressed in this report are qualified as follows:

The sole purpose of the investigation and of this report is to assess the physical characteristics of the Corridor with respect to the presence or absence in the environment of oil or hazardous materials and substances as defined in the applicable state and federal environmental laws and regulations and to gather information regarding current and past environmental conditions at the Corridor.

LiRo derived the data in this report primarily from visual inspections, examination of records in the public domain, interviews with individuals with information about the Corridor, and a limited number of subsurface explorations made on the dates indicated. The passage of time, manifestation of latent conditions or occurrence of future events may require further exploration at the Corridor, analysis of the data, and reevaluation of the findings, observations, and conclusions expressed in the report.

In preparing this report, LiRo has relied upon and presumed accurate certain information (or the absence thereof) about the Corridor and adjacent properties provided by governmental officials and agencies, the Client, and others identified herein. Except as otherwise stated in the report, LiRo has not attempted to verify the accuracy or completeness of any such information.

The data reported and the findings, observations, and conclusions expressed in the report are limited by the Scope of Services, including the extent of subsurface exploration and other tests. The Scope of Services was defined by the requests of the Client, the time and budgetary constraints imposed by the Client, and the availability of access to the Corridor.

Because of the limitations stated above, the findings, observations, and conclusions expressed by LiRo in this report are not, and should not be considered, an opinion concerning the compliance of any past or present owner or operator of the Corridor with any federal, state or local law or regulation. No warranty or guarantee, whether express or implied, is made with respect to the data reported or findings, observations, and conclusions expressed in this report. Further, such data, findings, observations, and conclusions are based solely upon Corridor conditions in existence at the time of investigation.

This report has been prepared on behalf of and for the exclusive use of the Client, and is subject to and issued in connection with the Agreement and the provisions thereof.

TABLES

TABLE 1 – SUMMARY OF FIELD INVESTIGATION
TABLE 2 – SUMMARY OF TCL VOCs DETECTED IN SOIL
TABLE 3 – SUMMARY OF PAHs DETECTED IN SOIL
TABLE 4 – SUMMARY OF PCBs DETECTED IN SOIL
TABLE 5 –SUMMARY OF WASTE CHARACTERIZATION IN SOIL

Table 1. Summary of Environmental Boring Data
Phase II Subsurface Corridor Investigation for Water Mains

Boring No.	Sample ID	PID (ppm)	Sample Interval (ftbg)	Total VOCs (ug/kg)	Total PAHs (ug/kg)	Total PCBs (ug/kg)	TCLP Metals/Waste Exceedance(s) (Yes/No)	Depth to Water (ftbg)	Total Depth (ftbg)	Other Comments
SB-01	SB-01-14.5-15	<1	14.5-15	8	NA	NA	NA	ND	15	No PID readings or visual or olfactory evidence of impacts were detected.
	SB-01-COMP		Composite	NA	ND	ND	No			
SB-02	SB-02-14.5-15	<1	14.5-15	ND	NA	NA	NA	ND	15	No PID readings or visual or olfactory evidence of impacts were detected.
	SB-02-COMP		Composite	NA	403	ND	No			
SB-03	SB-03-14.5-15	<1	14.5-15	7	NA	NA	NA	ND	15	No PID readings or visual or olfactory evidence of impacts were detected.
	SB-03-COMP		Composite	NA	ND	ND	No			
SB-04	SB-04-14.5-15	<1	14.5-15	7	NA	NA	NA	ND	15	No PID readings or visual or olfactory evidence of impacts were detected.
	SB-04-COMP		Composite	NA	713	ND	No			
SB-05	SB-05-14.5-15	<1	14.5-15	7	NA	NA	NA	ND	15	No PID readings or visual or olfactory evidence of impacts were detected.
	SB-05-COMP		Composite	NA	905	ND	No			
SB-06	SB-06-14.5-15	<1	14.5-15	21	NA	NA	NA	ND	15	No PID readings or visual or olfactory evidence of impacts were detected.
	SB-06-COMP		Composite	NA	ND	39	No			
SB-07	SB-07-14.5-15	<1	14.5-15	65	NA	NA	NA	ND	15	No PID readings or visual or olfactory evidence of impacts were detected.
	SB-07-COMP		Composite	NA	ND	ND	No			
SB-08	SB-08-12.5-13	<1	12.5-13	13	NA	NA	NA	ND	13	No PID readings or visual or olfactory evidence of impacts were detected.
	SB-08-COMP		Composite	NA	ND	ND	No			
SB-09	SB-09-9.5-10	<1	9.5-10	19	NA	NA	NA	ND	10	No PID readings or visual or olfactory evidence of impacts were detected.
	SB-09-COMP		Composite	NA	ND	ND	No			
SB-10	SB-10-14.5-15	<1	14.5-15	7	NA	NA	NA	ND	15	No PID readings or visual or olfactory evidence of impacts were detected.
	SB-10-COMP		Composite	NA	ND	ND	No			
SB-11	SB-11-14.5-15	<1	14-14.5	16	NA	NA	NA	ND	15	No PID readings or visual or olfactory evidence of impacts were detected.
	SB-11-COMP		Composite	NA	ND	ND	No			
SB-12	SB-12-14.5-15	<1	14.5-15	8	NA	NA	NA	ND	15	No PID readings or visual or olfactory evidence of impacts were detected.
	SB-12-COMP		Composite	NA	ND	ND	No			
SB-13	SB-13-14.5-15	<1	14.5-15	9	NA	NA	NA	ND	15	No PID readings or visual or olfactory evidence of impacts were detected.
	SB-13-COMP		Composite	NA	ND	ND	No			
SB-14	SB-14-14.5-15	<1	14.5-15	5	NA	NA	NA	ND	15	No PID readings or visual or olfactory evidence of impacts were detected.
	SB-14-COMP		Composite	NA	ND	ND	No			
SB-15	SB-15-9-9.5	<1	9-9.5	7	NA	NA	NA	ND	9.5	No PID readings or visual or olfactory evidence of impacts were detected.
	SB-15-COMP		Composite	NA	ND	ND	No			
SB-16	SB-16-17.5-18	<1	17.5-18	ND	NA	NA	NA	ND	18	No PID readings or visual or olfactory evidence of impacts were detected.
	SB-16-COMP		Composite	NA	ND	ND	No			
SB-17	SB-17-17.5-18	<1	17.5-18	9	NA	NA	NA	ND	18	No PID readings or visual or olfactory evidence of impacts were detected.
	SB-17-COMP		Composite	NA	ND	ND	No			
SB-18	SB-18-17.5-18	<1	17.5-18	7	NA	NA	NA	ND	18	No PID readings or visual or olfactory evidence of impacts were detected.
	SB-18-COMP		Composite	NA	ND	ND	No			

Table 1. Summary of Environmental Boring Data
Phase II Subsurface Corridor Investigation for Water Mains

Boring No.	Sample ID	PID (ppm)	Sample Interval (ftbg)	Total VOCs (ug/kg)	Total PAHs (ug/kg)	Total PCBs (ug/kg)	TCLP Metals/Waste Exceedance(s) (Yes/No)	Depth to Water (ftbg)	Total Depth (ftbg)	Other Comments
Boring No.	Sample ID	PID (ppm)	Sample Interval (ftbg)	Total VOCs (ug/kg)	Total PAHs (ug/kg)	Total PCBs (ug/kg)	TCLP Metals/Waste Exceedance(s) (Yes/No)	Depth to Water (ftbg)	Total Depth (ftbg)	Other Comments
SB-19	NA	NA	NA	NA	NA	NA	NA	NA	NA	Boring cancelled due to proixmity to underground utilities.
SB-20	SB-20-14.5-15	<1	14.5-15	9	NA	NA	NA	ND	15	No PID readings or visual or olfactory evidence of impacts were detected.
	SB-20-COMP		Composite	NA	ND	ND	No			

Notes:
Soil samples were analyzed for Target Compound List (TCL) Volatile Organic Compounds (VOCs), TCL Semi-Volatile Organic Compounds (SVOCs) Polycyclic Aromatic Hydrocarbons (PAHs), TCL PCBs, Total Petroleum Hydrocarbon (TPHC) Diesel Range Organics/Gasoline Range Organics (TPHC DRO/GRO), Resource Conservation and Recovery Act (RCRA) Characteristics, and/or Toxicity Characteristic Leaching Procedure (TCLP) RCRA Metals.
NA = Not Analyzed/Not Applicable
ND = Non detect
ftbg = feet below grade surface
ppm = parts per million
ug/kg = microgram per kilogram

Table 2. Summary of Target Compound List (TCL) Volatile Organic Compounds (VOCs) Detected in Soil

TCL VOC	Part 375-6.8 (a) Unrestricted Use (Track 1) Soil Cleanup Objectives (SCOs)	Part 375-6.8 (b) Restricted Use (Track 2) Residential Soil Cleanup Objectives (SCOs)	CP-51 Soil Cleanup Levels (SCLs) / Supplemental Soil Cleanup Objectives (SSCOs) - Residential	Sample ID, Date Collect, and Depth (ftbg)						
				SB-01-14.5-15	SB-02-14.5-15	SB-03-14.5-15	SB-04-14.5-15	SB-05-14.5-15	SB-06-14.5-15	SB-07-14.5-15
				9/7/2016	9/7/2016	9/8/2016	9/7/2016	9/7/2016	9/12/2016	9/12/2016
				14.5-15	14.5-15	14.5-15	14.5-15	14.5-15	14.5-15	14.5-15
Acetone	50	100,000	NS	8.1 J	ND	6.6 SCAL-E, J	7 J	7 J	13 CCV-E, SCAL-E, B	
Methylene chloride	50	51,000	NS	ND	ND	ND	ND	ND	8 J	7 J
Total VOCs	NS	NS	NS	8	ND	7	7	7	21	65

Notes:
All concentrations are reported in parts per billion (ppb or ug/kg)
ftbg = feet below grade surface
NS = No Standard
ND = Compound not detected above method detection limit (see attached lab report for mdl's)
SCAL-E = The value reported is estimated. The value is estimated due to its behavior during initial calibration (average Rf>20%).
J = Compound detected below the quantitation limit
CCV-E = The value reported is estimated. The value is estimated due to its behavior during continuing calibration verification (>20%difference for average Rfor >20% drift for quadric fit).
B = Analyte is found in the associated analysis batch blank. For volatiles, methylene chloride and acetone are common lab contaminates.
SCOs = Soil Cleanup Objectives as per the NYSDEC Regulations 6 NYCRR Subpart 375-6 Remedial Program Soil Cleanup Objectives (December 14, 2006).
CP-51 SCLs = New York State Department of Environmental Conservation (NYSDEC) CP-51 – Soil Cleanup Guidance (CP-51) (October 21, 2010).

BOLD = Concentration exceeds NYSDEC CP-51 SCLs Table 1 - Supplemental Soil Cleanup Objectives (Residential), Table 2 - Soil Cleanup Levels for Gasoline Contaminated Soils, Table 3 - Soil Cleanup Levels for Fuel oil Contaminated Soil
Concentration exceeds Restricted Use (Track 2) Residential Soil Cleanup Objectives
Italicized = Concentration exceeds Restricted Use (Track 2) Residential Soil Cleanup Objectives

Table 2. Summary of Target Compound List (TCL) Volatile Organic Compounds (VOCs) Detected in Soil

TCL VOC	Part 375-6.8 (a) Unrestricted Use (Track 1) Soil Cleanup Objectives (SCOs)	Part 375-6.8 (b) Restricted Use (Track 2) Residential Soil Cleanup Objectives (SCOs)	CP-51 Soil Cleanup Levels (SCLs) / Supplemental Soil Cleanup Objectives (SSCOs) - Residential	Sample ID, Date Collect, and Depth (ftbg)						
				SB-08-12.5-13	SB-09-9.5-10	SB-10-14.5-15	SB-11-14.5-15	SB-12-14.5-15	SB-13-14.5-15	SB-14-14.5-15
				9/12/2016	9/12/2016	9/8/2016	9/9/2016	9/9/2016	9/9/2016	9/8/2016
				12.5-13	9.5-10	14.5-15	14.5-15	14.5-15	14.5-15	14.5-15
Acetone	50	100,000	NS	6 J B	8.8 J B	7.4 J	6.7 J	ND	ND	5.4 J
Methylene chloride	50	51,000	NS	7.4 J	10 J	ND	9.1 J	7.9 J	9.2 J	ND
Total VOCs	NS	NS	NS	13	19	7	16	8	9	5

Notes:
All concentrations are reported in parts per billion (ppb or ug/kg)
ftbg = feet below grade surface
NS = No Standard
ND = Compound not detected above method detection limit (see attached lab report for mdl's)
SCAL-E = The value reported is estimated. The value is estimated due to its behavior during initial calibration (average Rf>20%).
J = Compound detected below the quantitation limit
CCV-E = The value reported is estimated. The value is estimated due to its behavior during continuing calibration verification (>20%difference for average Rfor >20% drift for quadric fit).
B = Analyte is found in the associated analysis batch blank. For volatiles, methylene chloride and acetone are common lab contaminates.
SCOs = Soil Cleanup Objectives as per the NYSDEC Regulations 6 NYCRR Subpart 375-6 Remedial Program Soil Cleanup Objectives (December 14, 2006).
CP-51 SCLs = New York State Department of Environmental Conservation (NYSDEC) CP-51 – Soil Cleanup Guidance (CP-51) (October 21, 2010).

BOLD = Concentration exceeds NYSDEC CP-51 SCLs Table 1 - Supplemental Soil Cleanup Objectives (Residential), Table 2 - Soil Cleanup Levels for Gasoline Contaminated Soils, Table 3 - Soil Cleanup Levels for Fuel oil Contaminated Soil
[redacted]
Italicized = Concentration exceeds Restricted Use (Track 2) Residential Soil Cleanup Objectives

Table 2. Summary of Target Compound List (TCL) Volatile Organic Compounds (VOCs) Detected in Soil

TCL VOC	Part 375-6.8 (a) Unrestricted Use (Track 1) Soil Cleanup Objectives (SCOs)	Part 375-6.8 (b) Restricted Use (Track 2) Residential Soil Cleanup Objectives (SCOs)	CP-51 Soil Cleanup Levels (SCLs) / Supplemental Soil Cleanup Objectives (SSCOs) - Residential	Sample ID, Date Collect, and Depth (ftbg)				
				SB-15-9-9.5	SB-16-17.5-18	SB-17-17.5-18	SB-18-17.5-18	SB-20-14.5-15
				9/8/2016	9/8/2016	9/7/2016	9/12/2016	9/9/2016
				9-9.5	17.5-18	17.5-18	17.5-18	14.5-15
Acetone	50	100,000	NS	7.3 SCAL-E, J	ND	9.2 J	ND	ND
Methylene chloride	50	51,000	NS	ND	ND	ND	7.1 J	9 J
Total VOCs	NS	NS	NS	7	ND	9	7	9

Notes:
All concentrations are reported in parts per billion (ppb or ug/kg)
ftbg = feet below grade surface
NS = No Standard
ND = Compound not detected above method detection limit (see attached lab report for mdl's)
SCAL-E = The value reported is estimated. The value is estimated due to its behavior during initial calibration (average Rf>20%).
J = Compound detected below the quantitation limit
CCV-E = The value reported is estimated. The value is estimated due to its behavior during continuing calibration verification (>20%difference for average Rfor >20% drift for quadric fit).
B = Analyte is found in the associated analysis batch blank. For volatiles, methylene chloride and acetone are common lab contaminates.
SCOs = Soil Cleanup Objectives as per the NYSDEC Regulations 6 NYCRR Subpart 375-6 Remedial Program Soil Cleanup Objectives (December 14, 2006).
CP-51 SCLs = New York State Department of Environmental Conservation (NYSDEC) CP-51 – Soil Cleanup Guidance (CP-51) (October 21, 2010).

BOLD = Concentration exceeds NYSDEC CP-51 SCLs Table 1 - Supplemental Soil Cleanup Objectives (Residential), Table 2 - Soil Cleanup Levels for Gasoline Contaminated Soils, Table 3 - Soil Cleanup Levels for Fuel oil Contaminated Soil
Shaded = Concentration exceeds Restricted Use (Track 2) Residential Soil Cleanup Objectives
Italicized = Concentration exceeds Restricted Use (Track 2) Residential Soil Cleanup Objectives

Table 3. Summary of Target Compound List (TCL) Polycyclic Aromatic Hydrocarbons (PAHs) Detected in Soil

TCL SVOC	Part 375-6.8 (a) Unrestricted Use (Track 1) Soil Cleanup Objectives (SCOs)	Part 375-6.8 (b) Restricted Use (Track 2) Residential Soil Cleanup Objectives (SCOs)	CP-51 Soil Cleanup Levels (SCLs) / Supplemental Soil Cleanup Objectives (SSCOs) - Residential	Sample ID, Date Collect, and Depth (ftbg)						
				SB-01-COMP 9/7/2016 Composite	SB-02-COMP 9/7/2016 Composite	SB-03-COMP 9/8/2016 Composite	SB-04-COMP 9/7/2016 Composite	SB-05-COMP 9/7/2016 Composite	SB-06-COMP 9/12/2016 Composite	SB-07-COMP 9/12/2016 Composite
Anthracene	100,000	100,000	100,000	ND	ND	ND	56.2 J	ND	ND	ND
Benzo(a)anthracene	1,000	1,000	1,000	ND	56.2 J	ND	69.5 J	105	ND	ND
Benzo(k)fluoranthene	800	1,000	800	ND	ND	ND	ND	72.3 J	ND	ND
Chrysene	1,000	1,000	1,000	ND	59 J	ND	78.3 J	114	ND	ND
Flouranthene	100,000	100,000	100,000	ND	106	ND	185	243	ND	ND
Phenanthrene	100,000	100,000	100,000	ND	64.7 J	ND	153	116	ND	ND
Pyrene	100,000	100,000	100,000	ND	117	ND	171	255	ND	ND
Total PAHs	NS	NS	NS	ND	403	ND	713	905	ND	ND

Notes:
All concentrations are reported in parts per billion (ppb or ug/kg)
ftbg = feet below grade surface
ND = Compound not detected above method detection limit (see attached lab report for mdl's)
NS = No Standard
J = Compound detected below the quantitation limit
SCOs = Soil Cleanup Objectives as per the NYSDEC Regulations 6 NYCRR Subpart 375-6 Remedial Program Soil Cleanup Objectives (December 14, 2006).
CP-51 SCLs = New York State Department of Environmental Conservation (NYSDEC) CP-51 – Soil Cleanup Guidance (CP-51) (October 21, 2010).

BOLD = Concentration exceeds NYSDEC CP-51 SCLs Table 1 - Supplemental Soil Cleanup Objectives (Residential), Table 2 - Soil Cleanup Levels for Gasoline Contaminated Soils, Table 3 - Soil Cleanup Levels for Fuel oil Contaminated Soil
[redacted]
Italicized = Concentration exceeds Restricted Use (Track 2) Residential Soil Cleanup Objectives

Table 3. Summary of Target Compound List (TCL) Polycyclic Aromatic Hydrocarbons (PAHs) Detected in Soil

TCL SVOC	Part 375-6.8 (a) Unrestricted Use (Track 1) Soil Cleanup Objectives (SCOs)	Part 375-6.8 (b) Restricted Use (Track 2) Residential Soil Cleanup Objectives (SCOs)	CP-51 Soil Cleanup Levels (SCLs) / Supplemental Soil Cleanup Objectives (SSCOs) - Residential	Sample ID, Date Collect, and Depth (ftbg)						
				SB-08-COMP	SB-09-COMP	SB-10-COMP	SB-11-COMP	SB-12-COMP	SB-13-COMP	SB-14-COMP
				9/12/2016	9/12/2016	9/8/2016	9/9/2016	9/9/2016	9/9/2016	9/8/2016
				Composite	Composite	Composite	Composite	Composite	Composite	Composite
Anthracene	100,000	100,000	100,000	ND	ND	ND	ND	ND	ND	ND
Benzo(a)anthracene	1,000	1,000	1,000	ND	ND	ND	ND	ND	ND	ND
Benzo(k)fluoranthene	800	1,000	800	ND	ND	ND	ND	ND	ND	ND
Chrysene	1,000	1,000	1,000	ND	ND	ND	ND	ND	ND	ND
Flouranthene	100,000	100,000	100,000	ND	ND	ND	ND	ND	ND	ND
Phenanthrene	100,000	100,000	100,000	ND	ND	ND	ND	ND	ND	ND
Pyrene	100,000	100,000	100,000	ND	ND	ND	ND	ND	ND	ND
Total PAHs	NS	NS	NS	ND	ND	ND	ND	ND	ND	ND

Notes:
All concentrations are reported in parts per billion (ppb or ug/kg)
ftbg = feet below grade surface
ND = Compound not detected above method detection limit (see attached lab report for mdl's)
NS = No Standard
J = Compound detected below the quantitation limit
SCOs = Soil Cleanup Objectives as per the NYSDEC Regulations 6 NYCRR Subpart 375-6 Remedial Program Soil Cleanup Objectives (December 14, 2006).
CP-51 SCLs = New York State Department of Environmental Conservation (NYSDEC) CP-51 – Soil Cleanup Guidance (CP-51) (October 21, 2010).

BOLD = Concentration exceeds NYSDEC CP-51 SCLs Table 1 - Supplemental Soil Cleanup Objectives (Residential), Table 2 - Soil Cleanup Levels for Gasoline Contaminated Soils, Table 3 - Soil Cleanup Levels for Fuel oil Contaminated Soil
Shaded = Concentration exceeds Unrestricted Use
Italicized = Concentration exceeds Restricted Use (Track 2) Residential Soil Cleanup Objectives

Table 3. Summary of Target Compound List (TCL) Polycyclic Aromatic Hydrocarbons (PAHs) Detected in Soil

TCL SVOC	Part 375-6.8 (a) Unrestricted Use (Track 1) Soil Cleanup Objectives (SCOs)	Part 375-6.8 (b) Restricted Use (Track 2) Residential Soil Cleanup Objectives (SCOs)	CP-51 Soil Cleanup Levels (SCLs) / Supplemental Soil Cleanup Objectives (SSCOs) - Residential	Sample ID, Date Collect, and Depth (ftbg)				
				SB-15-COMP 9/8/2016 Composite	SB-16-COMP 9/8/2016 Composite	SB-17-COMP 9/7/2016 Composite	SB-18-COMP 9/12/2016 Composite	SB-20-COMP 9/9/2016 Composite
Anthracene	100,000	100,000	100,000	ND	ND	ND	ND	ND
Benzo(a)anthracene	1,000	1,000	1,000	ND	ND	ND	ND	ND
Benzo(k)fluoranthene	800	1,000	800	ND	ND	ND	ND	ND
Chrysene	1,000	1,000	1,000	ND	ND	ND	ND	ND
Flouranthene	100,000	100,000	100,000	ND	ND	ND	ND	ND
Phenanthrene	100,000	100,000	100,000	ND	ND	ND	ND	ND
Pyrene	100,000	100,000	100,000	ND	ND	ND	ND	ND
Total PAHs	NS	NS	NS	ND	ND	ND	ND	ND

Notes:
All concentrations are reported in parts per billion (ppb or ug/kg)
ftbg = feet below grade surface
ND = Compound not detected above method detection limit (see attached lab report for mdl's)
NS = No Standard
J = Compound detected below the quantitation limit
SCOs = Soil Cleanup Objectives as per the NYSDEC Regulations 6 NYCRR Subpart 375-6 Remedial Program Soil Cleanup Objectives (December 14, 2006).
CP-51 SCLs = New York State Department of Environmental Conservation (NYSDEC) CP-51 – Soil Cleanup Guidance (CP-51) (October 21, 2010).

BOLD = Concentration exceeds NYSDEC CP-51 SCLs Table 1 - Supplemental Soil Cleanup Objectives (Residential), Table 2 - Soil Cleanup Levels for Gasoline Contaminated Soils, Table 3 - Soil Cleanup Levels for Fuel oil Contaminated Soil

Italicized = Concentration exceeds Restricted Use (Track 2) Residential Soil Cleanup Objectives

Table 4. Summary of Polychlorinated Biphenyls (PCBs) Detected in Soil

PCBs	Part 375-6.8 (a) Unrestricted Use (Track 1) Soil Cleanup Objectives (SCOs)	Part 375-6.8 (b) Restricted Use (Track 2) Residential Soil Cleanup Objectives (SCOs)	CP-51 Soil Cleanup Levels (SCLs) / Supplemental Soil Cleanup Objectives (SSCOs) - Residential	Sample ID, Date Collect, and Depth (ftbg)							
				SB-01-COMP	SB-02-COMP	SB-03-COMP	SB-04-COMP	SB-05-COMP	SB-06-COMP	SB-07-COMP	SB-08-COMP
				9/7/2016	9/7/2016	9/8/2016	9/7/2016	9/7/2016	9/12/2016	9/12/2016	9/12/2016
				Composite	Composite	Composite	Composite	Composite	Composite	Composite	Composite
Aroclor 1254	NS	NS	NS	ND	ND	ND	ND	ND	39.3	ND	ND
Total PCBs	100	1,000	NS	ND	ND	ND	ND	ND	39	ND	ND

Notes:
All concentrations are reported in parts per billion (ppb or ug/kg)
ftbg = feet below grade surface
ND = Compound not detected above method detection limit (see attached lab report for mdl's)
NS = No Standard
SCOs = Soil Cleanup Objectives as per the NYSDEC Regulations 6 NYCRR Subpart 375-6 Remedial Program Soil Cleanup Objectives (December 14, 2006).
CP-51 SCLs = New York State Department of Environmental Conservation (NYSDEC) CP-51 – Soil Cleanup Guidance (CP-51) (October 21, 2010).

BOLD = Concentration exceeds NYSDEC CP-51 SCLs Table 1 - Supplemental Soil Cleanup Objectives (Residential), Table 2 - Soil Cleanup Levels for Gasoline Contaminated Soils, Table 3 - Soil Cleanup Levels for Fuel oil Contaminated Soil

Italicized = Concentration exceeds Restricted Use (Track 2) Residential Soil Cleanup Objectives

Table 4. Summary of Polychlorinated Biphenyls (PCBs) Detected in Soil

PCBs	Part 375-6.8 (a) Unrestricted Use (Track 1) Soil Cleanup Objectives (SCOs)	Part 375-6.8 (b) Restricted Use (Track 2) Residential Soil Cleanup Objectives (SCOs)	CP-51 Soil Cleanup Levels (SCLs) / Supplemental Soil Cleanup Objectives (SSCOs) - Residential	Sample ID, Date Collect, and Depth (ftbg)							
				SB-09-COMP	SB-10-COMP	SB-11-COMP	SB-12-COMP	SB-13-COMP	SB-14-COMP	SB-15-COMP	SB-16-COMP
				9/12/2016	9/8/2016	9/9/2016	9/9/2016	9/9/2012	9/8/2016	9/8/2016	9/8/2016
				Composite	Composite	Composite	Composite	Composite	Composite	Composite	Composite
Aroclor 1254	NS	NS	NS	ND	ND	ND	ND	ND	ND	ND	ND
Total PCBs	100	1,000	NS	ND	ND	ND	ND	ND	ND	ND	ND

Notes:
All concentrations are reported in parts per billion (ppb or ug/kg)
ftbg = feet below grade surface
ND = Compound not detected above method detection limit (see attached lab report for mdl's)
NS = No Standard
SCOs = Soil Cleanup Objectives as per the NYSDEC Regulations 6 NYCRR Subpart 375-6 Remedial Program Soil Cleanup Objectives (December 14, 2006).
CP-51 SCLs = New York State Department of Environmental Conservation (NYSDEC) CP-51 – Soil Cleanup Guidance (CP-51) (October 21, 2010).

BOLD = Concentration exceeds NYSDEC CP-51 SCLs Table 1 - Supplemental Soil Cleanup Objectives (Residential), Table 2 - Soil Cleanup Levels for Gasoline Contaminated Soils, Table 3 - Soil Cleanup Levels for Fuel oil Contaminated Soil
[redacted]
Italicized = Concentration exceeds Restricted Use (Track 2) Residential Soil Cleanup Objectives

Table 4. Summary of Polychlorinated Biphenyls (PCBs) Detected in Soil

PCBs	Part 375-6.8 (a) Unrestricted Use (Track 1) Soil Cleanup Objectives (SCOs)	Part 375-6.8 (b) Restricted Use (Track 2) Residential Soil Cleanup Objectives (SCOs)	CP-51 Soil Cleanup Levels (SCLs) / Supplemental Soil Cleanup Objectives (SSCOs) - Residential	Sample ID, Date Collect, and Depth (ftbg)		
				SB-17-COMP	SB-18-COMP	SB-20-COMP
				9/7/2016	9/12/2016	9/9/2016
				Composite	Composite	Composite
Aroclor 1254	NS	NS	NS	ND	ND	ND
Total PCBs	100	1,000	NS	ND	ND	ND

Notes:
All concentrations are reported in parts per billion (ppb or ug/kg)
ftbg = feet below grade surface
ND = Compound not detected above method detection limit (see attached lab report for mdl's)
NS = No Standard
SCOs = Soil Cleanup Objectives as per the NYSDEC Regulations 6 NYCRR Subpart 375-6 Remedial Program Soil Cleanup Objectives (December 14, 2006).
CP-51 SCLs = New York State Department of Environmental Conservation (NYSDEC) CP-51 – Soil Cleanup Guidance (CP-51) (October 21, 2010).

BOLD = Concentration exceeds NYSDEC CP-51 SCLs Table 1 - Supplemental Soil Cleanup Objectives (Residential), Table 2 - Soil Cleanup Levels for Gasoline Contaminated Soils, Table 3 - Soil Cleanup Levels for Fuel oil Contaminated Soil
[redacted]
Italicized = Concentration exceeds Restricted Use (Track 2) Residential Soil Cleanup Objectives

Table 5. Summary of Waste Characterization in Soil

Parameter	6 NYCRR Part 371 and RCRA	Sample ID, Date Collect							
		SB-01-COMP	SB-02-COMP	SB-03-COMP	SB-04-COMP	SB-05-COMP	SB-06-COMP	SB-07-COMP	SB-08-COMP
		9/7/2016	9/7/2016	9/8/2016	9/7/2016	9/7/2016	9/12/2016	9/12/2016	9/12/2016
		Composite	Composite	Composite	Composite	Composite	Composite	Composite	Composite
METALs[1]	ug/L								
Arsenic	5,000	ND	ND	ND	ND	ND	ND	ND	6
Barium	100,000	301	537	380	362	537	230	221	352
Chromium	5,000	ND	ND	ND	ND	ND	ND	ND	ND
Lead	5,000	21	17	29	17	47	73	45	25
Selenium	1,000	25	16	27 M-SeTC, B	18 M-SeTC, B	19 M-SeTC, B	ND	ND	ND
MISC. PARAMETERS (units)									
Reactivity Sulfide (mg/kg)	500	40	40	ND	32	40	32	ND	40
Reactivity Cyanide (mg/kg)	250	ND	ND	ND	ND	ND	ND	ND	ND
pH (SU)	2-12.5	8.1	9.89	7.64	10.2	8.06	7.3	6.8	7.45
Ignitability	>140 °F	NA	NA	NA	NA	NA	NA	NA	NA
TPHC Diesel Range Organics (mg/kg)	NS	ND	14.4	ND	ND	18.8	46.5	44.8	41.8
TPHC Gasoiline Range Organics (mg/kg)	NS	ND	ND	ND	ND	ND	ND	ND	ND

Notes:
ftbg = feet below grade surface
NS = No Standard
ND = Compound not detected above method detection limit (see attached lab report for mdl's)
SU = Standard unit
M-SeTC = It is noted that a known interference with selenium at the analytical line for analysis by ICP is caused by carbon emissions from the RCLP or high organics matrix. The data user may subtract the matrix value from the data if needed.

B = Analyte is found in the associated analysis batch blank. For volatiles, methylene chloride and acetone are common lab contaminants.
mg/Kg = milligram per kilogram
ug/L = microgram per liter
[1] = TCLP RCRA Metals

Shading: Concentration exceeds [illegible]

Table 5. Summary of Waste Characterization in Soil

Parameter	6 NYCRR Part 371 and RCRA	Sample ID, Date Collect							
		SB-09-COMP	SB-10-COMP	SB-11-COMP	SB-12-COMP	SB-13-COMP	SB-14-COMP	SB-15-COMP	SB-16-COMP
		9/12/2016	9/8/2016	9/9/2016	9/9/2016	9/9/2016	9/8/2016	9/8/2016	9/8/2016
		Composite	Composite	Composite	Composite	Composite	Composite	Composite	Composite
METALs[1]	ug/L								
Arsenic	5,000	ND	ND	5	ND	ND	ND	ND	ND
Barium	100,000	169	214	263	289	325	360	327	302
Chromium	5,000	ND	ND	ND	12	ND	ND	ND	ND
Lead	5,000	20	28	35	30	509	93	110	45
Selenium	1,000	ND	18 M-SeTC, B	ND	19 M-SeTC	ND	22 M-SeTC, B	20 M-SeTC, B	23 M-SeTC, B
MISC. PARAMETERS (units)									
Reactivity Sulfide (mg/kg)	500	ND	16	40	40	16	ND	16	32
Reactivity Cyanide (mg/kg)	250	ND	ND	ND	ND	ND	ND	ND	ND
pH (SU)	2-12.5	6.54	8.19	5.98	6.75	5.53	7.02	6.47	7.15
Ignitability	>140 °F	NA	NA	NA	NA	NA	NA	NA	NA
TPHC Diesel Range Organics (mg/kg)	NS	43.9	ND	38.4	47.1	56.4	ND	ND	ND
TPHC Gasoiline Range Organics (mg/kg)	NS	ND	ND	ND	ND	ND	ND	ND	ND

Notes:
ftbg = feet below grade surface
NS = No Standard
ND = Compound not detected above method detection limit (see attached lab report for mdl's)
SU = Standard unit
M-SeTC = It is noted that a known interference with selenium at the analytical line for analysis by ICP is caused by carbon emissions from the RCLP or high organics matrix. The data user may subtract the matrix value from the data if needed.

B = Analyte is found in the associated analysis batch blank. For volatiles, methylene chloride and acetone are common lab contaminants.
mg/Kg = milligram per kilogram
ug/L = microgram per liter
[1] = TCLP RCRA Metals

[redacted]

Table 5. Summary of Waste Characterization in Soil

Parameter	6 NYCRR Part 371 and RCRA	Sample ID, Date Collect		
		SB-17-COMP	SB-18-COMP	SB-20-COMP
		9/7/2016	9/12/2016	9/9/2016
		Composite	Composite	Composite
METALs[1]	**ug/L**			
Arsenic	5,000	ND	ND	ND
Barium	100,000	363	212	301
Chromium	5,000	ND	ND	9
Lead	5,000	30	15	21
Selenium	1,000	26 M-SeTC, B	ND	ND
MISC. PARAMETERS (units)				
Reactivity Sulfide (mg/kg)	500	ND	40	16
Reactivity Cyanide (mg/kg)	250	ND	ND	ND
pH (SU)	2-12.5	7.38	6.39	6.29
Ignitability	>140 °F	NA	NA	NA
TPHC Diesel Range Organics (mg/kg)	NS	ND	61	52.9
TPHC Gasoiline Range Organics (mg/kg)	NS	ND	ND	ND

Notes:
ftbg = feet below grade surface
NS = No Standard
ND = Compound not detected above method detection limit (see attached lab report for mdl's)
SU = Standard unit
M-SeTC = It is noted that a known interference with selenium at the analytical line for analysis by ICP is caused by carbon emissions from the RCLP or high organics matrix. The data user may subtract the matrix value from the data if needed.

B = Analyte is found in the associated analysis batch blank. For volatiles, methylene chloride and acetone are common lab contaminants.
mg/Kg = milligram per kilogram
ug/L = microgram per liter
[1] = TCLP RCRA Metals

[redacted]

FIGURE 1 – TOPOGRAPHIC CORRIDOR LOCATION MAP

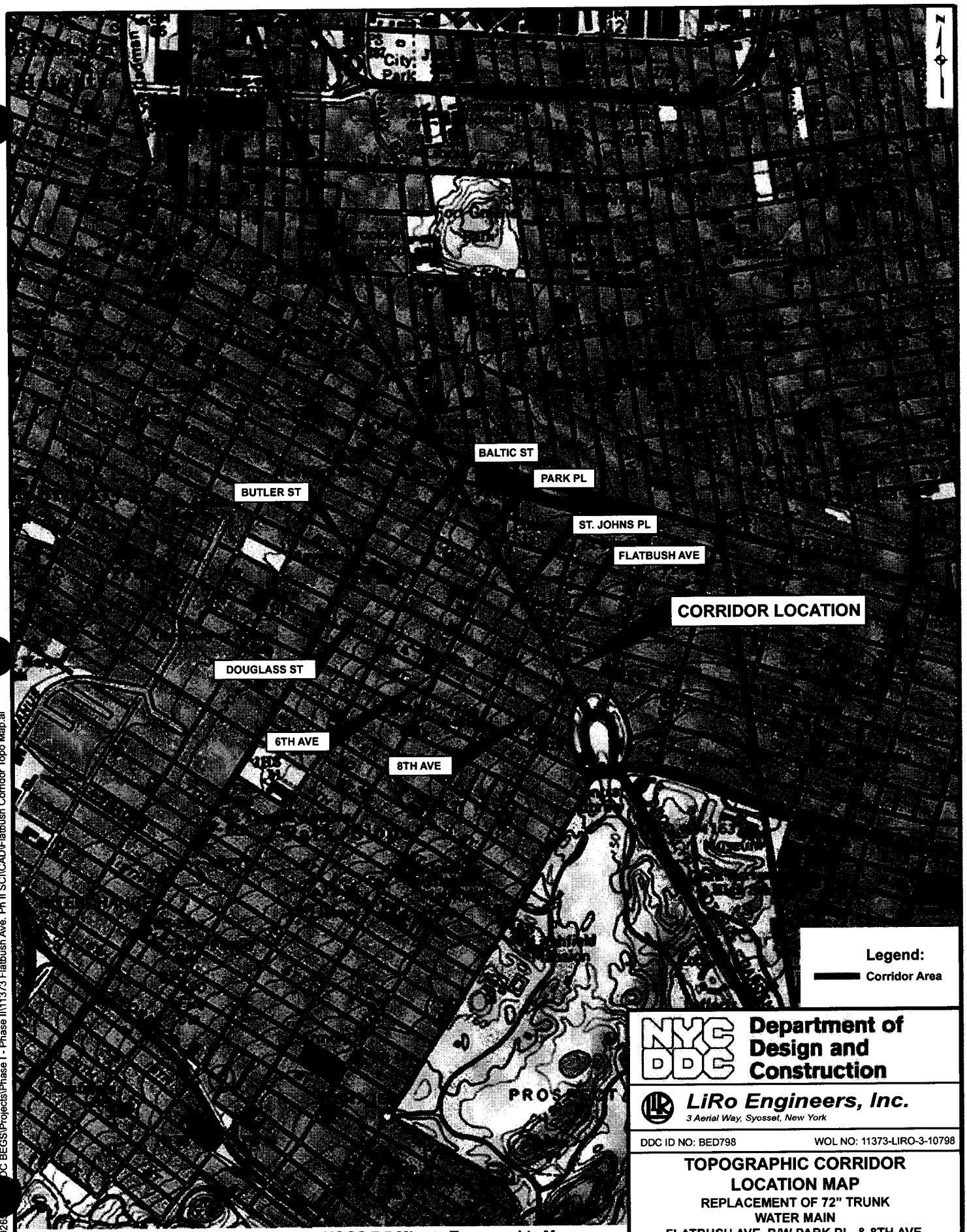

0 1,000 2,000 3,000 4,000 Feet

USGS 7.5 Minute Topographic Map
40073-F8 Brooklyn
Copyright © 2013 National Geographic Society

NYC DDC Department of Design and Construction

LiRo Engineers, Inc.
3 Aerial Way, Syosset, New York

DDC ID NO: BED798 WOL NO: 11373-LIRO-3-10798

TOPOGRAPHIC CORRIDOR LOCATION MAP
REPLACEMENT OF 72" TRUNK WATER MAIN
FLATBUSH AVE. B/W PARK PL. & 8TH AVE, BROOKLYN, NEW YORK

SCALE: AS SHOWN	DATE: 10/2016	FIGURE: 1

J:\15-008-026 DC BEGS\Projects\Phase I - Phase II\11373 Flatbush Ave. Ph II SC\\CAD\Flatbush Corridor Topo Map.ai

FIGURE 2 – SAMPLE LOCATION PLAN

J:\15-008-0265 2015 DDC BEGS\Projects\Phase I - Phase II\11373 Flatbush Ave. Ph II SCI\CAD\Flatbush Boring Plan.DWG, 10/10/2016 9:34:25 AM, AMK

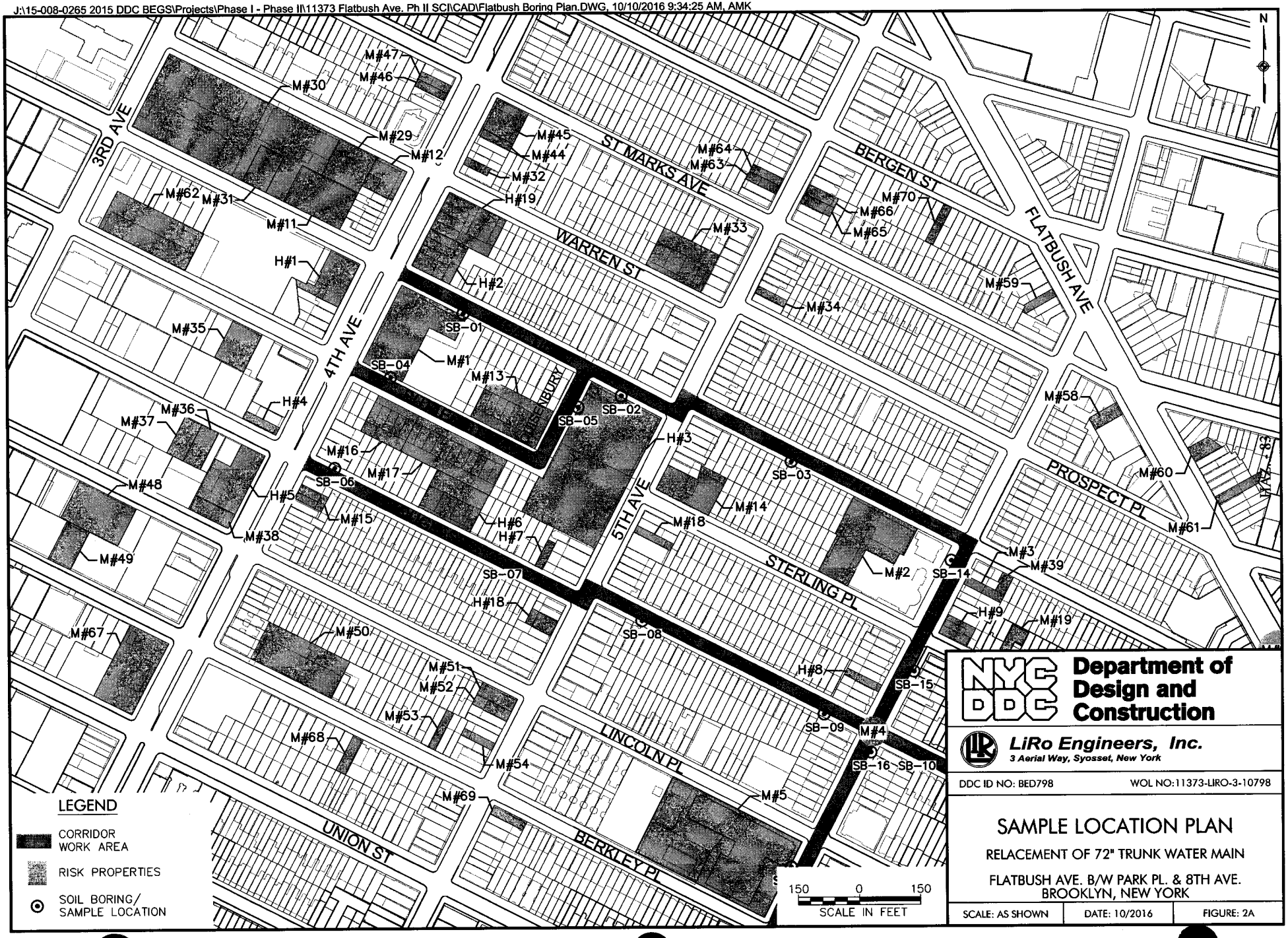

Department of Design and Construction

LiRo Engineers, Inc.
3 Aerial Way, Syosset, New York

DDC ID NO: BED798 | WOL NO:11373-LIRO-3-10798

SAMPLE LOCATION PLAN

RELACEMENT OF 72" TRUNK WATER MAIN

FLATBUSH AVE. B/W PARK PL. & 8TH AVE.
BROOKLYN, NEW YORK

SCALE: AS SHOWN	DATE: 10/2016	FIGURE: 2A

J:\15-008-0265 2015 DDC BEGS\Projects\Phase I - Phase II\11373 Flatbush Ave. Ph II SCI\CAD\Flatbush Boring Plan.DWG, 10/10/2016 9:34:27 AM, AMK

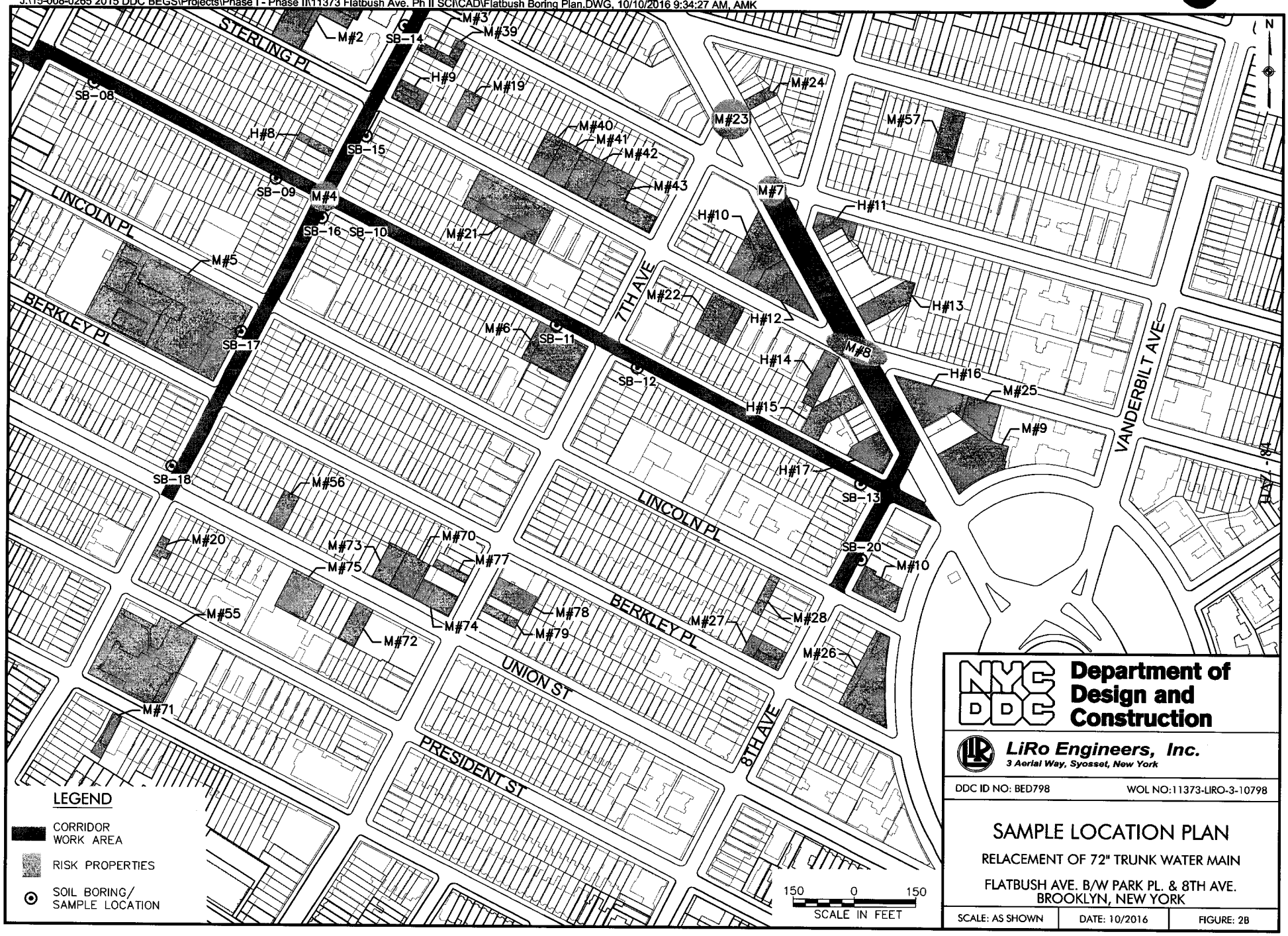

APPENDIX A
BORING LOCATION SKETCHES

J:\15-008-0265 2015 DDC BEGS\Projects\Phase I - Phase II\11373 Flatbush Ave. Ph II SCI\CAD\Flatbush Boring Sketch.DWG, 10/10/2016 9:33:31 AM, AMK

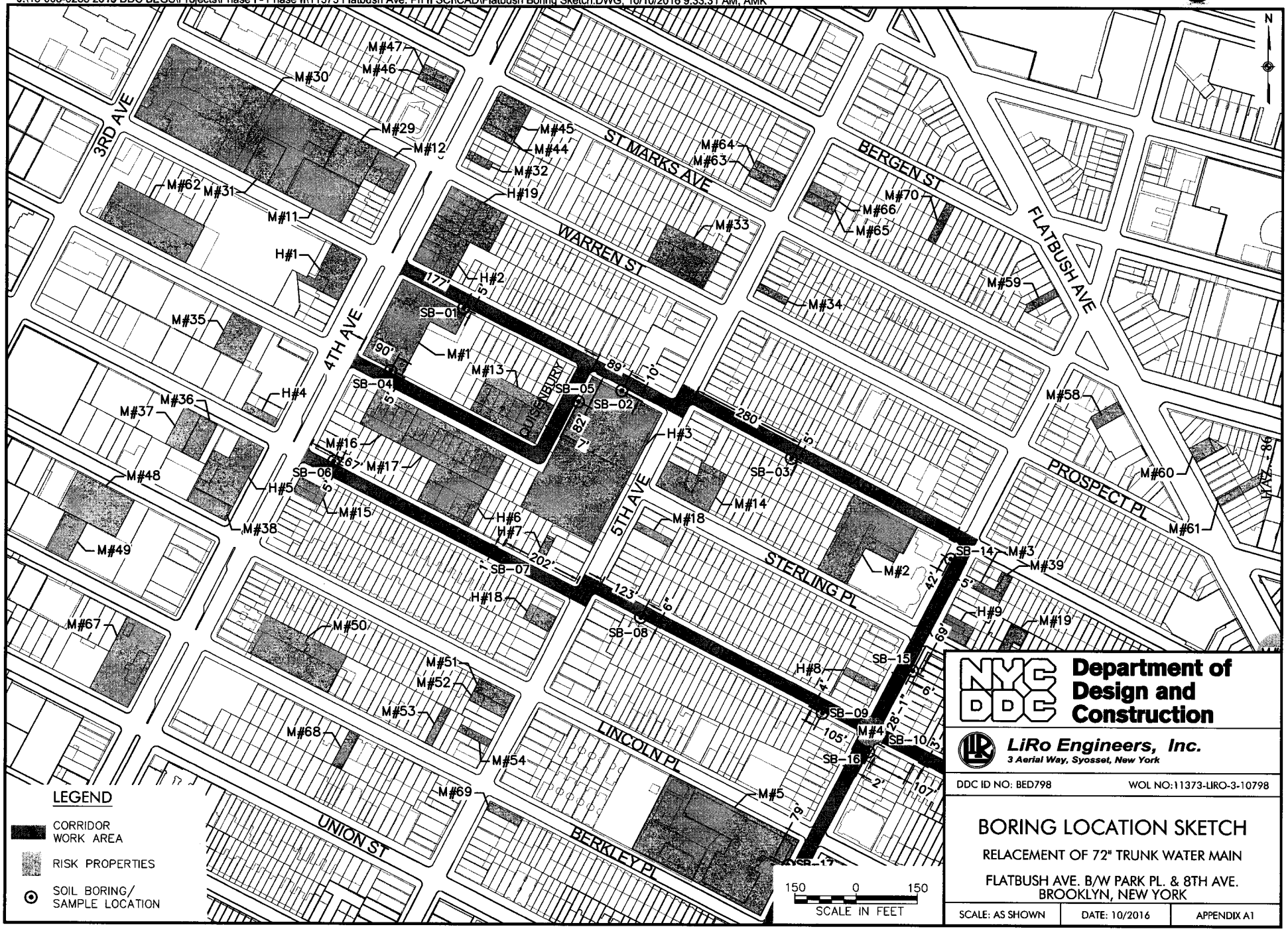

NYC DDC **Department of Design and Construction**

LiRo Engineers, Inc.
3 Aerial Way, Syosset, New York

DDC ID NO: BED798 | WOL NO:11373-LIRO-3-10798

BORING LOCATION SKETCH

RELACEMENT OF 72" TRUNK WATER MAIN

FLATBUSH AVE. B/W PARK PL. & 8TH AVE.
BROOKLYN, NEW YORK

SCALE: AS SHOWN	DATE: 10/2016	APPENDIX A1

J:\15-008-0265 2015 DDC BEGS\Projects\Phase I - Phase II\11373 Flatbush Ave. Ph II SCI\CAD\Flatbush Boring Sketch.DWG, 10/10/2016 9:33:33 AM, AMK

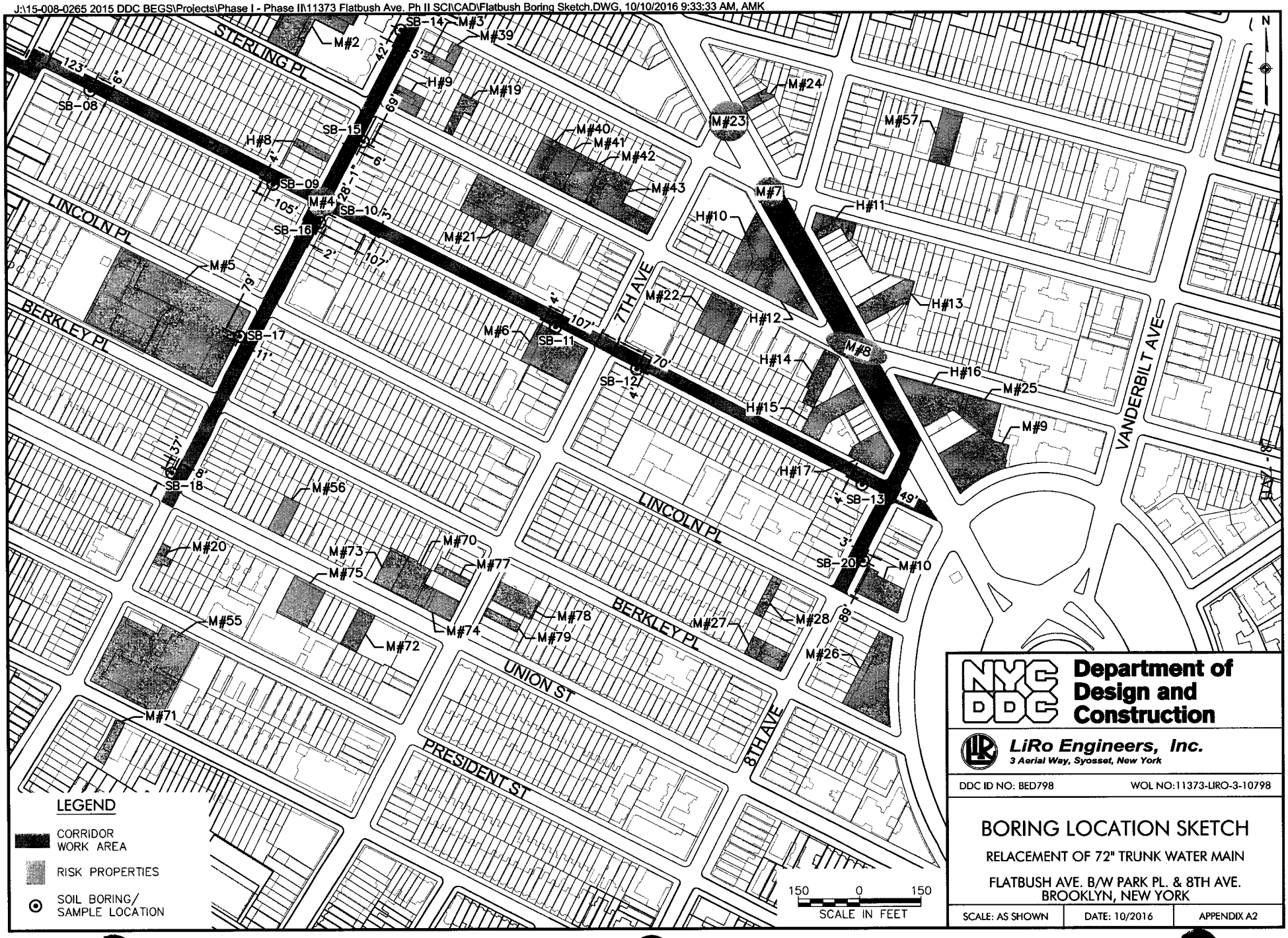

APPENDIX B
GEOLOGIC BORING LOGS

LiRo Engineers, Inc.

TEST BORING LOG

BORING NO:	SB-01
SHEET:	1 of 19
JOB NO.:	15-008-0265
LOCATION:	Baltic St./4th Ave.
GROUND ELEVATION:	NA
DATE STARTED:	August 30, 2016
DATE FINISHED:	September 7, 2016
DRILLER:	Kensley N.
GEOLOGIST:	Eva Jakubowska
REVIEWED BY:	

PROJECT: Trunk Watermain Replacement in Flatbush Ave, Brooklyn, NY

CLIENT: Department of Design and Construction - OEGS - BED798-11373

BORING CONTRACTOR: Associated Environmental Services, Ltd.

GROUNDWATER: NA

DATE	TIME	LEVEL	TYPE	TYPE	CAS.	SAMPLER	TUBE
			NA	DIA.		5' Macros	
				WT.			
				FALL			

DEPTH FEET	STRATA	SAMPLE "S" NO.	SAMPLE "N" NO.	BLOWS PER 6"	REC% RQD%	COLOR	CONSISTENCY HARDNESS	MATERIAL DESCRIPTION	USCS	REMARKS
1					NA	Reddish-brown	NA	0-1.5': Medium to fine Sand and round rocks.	FILL	Cleared to 6 ftbg
6								1.5-6.0': Fine Sand, some large rocks.		0.0 ppm Moist
10					80%	Reddish-brown	Dense	6-10': Fine to medium Sand and fill material.		0.0 ppm Moist
15					80%	Reddish-brown	Dense	10-15': Fine to medium Sand and fill material.		0.0 ppm Moist
								End of Boring at 15 ftbg.		
20										
25										
30										
35										

COMMENTS: Grab sample collected @ 14.5-15 ftbg for VOCs. Composite sample collected from 0-15 ftbg for remaining parameters. Soil was classified according to the Unified Soil Classification System (USCS).

PROJECT NO.: 15-008-0265

BORING NO.: SB-01

LiRo Engineers, Inc.

TEST BORING LOG

BORING NO:	SB-02
SHEET:	2 of 19
JOB NO.:	15-008-0265
LOCATION:	Baltic St./5th Ave.
GROUND ELEVATION:	NA
DATE STARTED:	August 30, 2016
DATE FINISHED:	September 7, 2016
DRILLER:	Kensley N.
GEOLOGIST:	Eva Jakubowska
REVIEWED BY:	

PROJECT: Trunk Watermain Replacement in Flatbush Ave, Brooklyn, NY

CLIENT: Department of Design and Construction - OEGS - BED798-11373

BORING CONTRACTOR: Associated Environmental Services, Ltd.

GROUNDWATER: NA

DATE	TIME	LEVEL	TYPE	TYPE	CAS.	SAMPLER	TUBE
						5' Macros	
			NA	DIA.			
				WT.			
				FALL			

DEPTH FEET	SAMPLE STRATA	"S" NO.	"N" NO.	BLOWS PER 6"	REC% RQD%	DESCRIPTION COLOR	CONSISTENCY HARDNESS	MATERIAL DESCRIPTION	USCS	REMARKS
1								0-8": Concrete.		
					NA	Dark reddish-brown	NA	8"-6.0': Fine to medium Sand with rocks.		Cleared to 6 ftbg 0.0 ppm Moist
6										
					40%	Reddish-brown	Dense	6-10': Fine to medium Sand and fill material.	FILL	0.0 ppm Moist
10										
					60%	Reddish-brown	Dense	10-15': Fine Sand, trace of silt, and fill material.		0.0 ppm Moist
15										
								End of Boring at 15 ftbg.		
20										
25										
30										
35										

COMMENTS: Grab sample collected @ 14.5-15 ftbg for VOCs. Composite sample collected from 0-15 ftbg for remaining parameters. Soil was classified according to the Unified Soil Classification System (USCS).

PROJECT NO.: 15-008-0265

BORING NO.: SB-02

LiRo Engineers, Inc.

TEST BORING LOG

BORING NO:	SB-03
SHEET:	3 of 19
JOB NO.:	15-008-0265
LOCATION:	Park Pl.
GROUND ELEVATION:	NA
DATE STARTED:	August 31, 2016
DATE FINISHED:	September 8, 2016
DRILLER:	John Weiss
GEOLOGIST:	Eva Jakubowska
REVIEWED BY:	

PROJECT: Trunk Watermain Replacement in Flatbush Ave, Brooklyn, NY
CLIENT: Department of Design and Construction - OEGS - BED798-11373
BORING CONTRACTOR: Associated Environmental Services, Ltd.

GROUNDWATER: NA

DATE	TIME	LEVEL	TYPE	TYPE	CAS.	SAMPLER	TUBE
						5' Macros	
			NA	DIA.			
				WT.			
				FALL			

DEPTH FEET	STRATA	SAMPLE "S" NO.	SAMPLE "N" NO.	BLOWS PER 6"	REC% RQD%	DESCRIPTION COLOR	CONSISTENCY HARDNESS	MATERIAL DESCRIPTION	USCS	REMARKS
1					NA	Light brown	NA	0-5.5': Fine Sand, some rocks.	FILL	Cleared to 6 ftbg 0.0 ppm Moist
6								5.5-6': Fine Sand and silt.		
10					90%	Light brown to reddish-brown	Medium loose	6-10': Fine Sand, trace of clay and fill material.		0.0 ppm Moist
15					90%	Light reddish-brown	Medium loose	10-15': Fine Sand, trace of silt, and fragmented rock.		0.0 ppm Moist
20								End of Boring at 15 ftbg.		
25										
30										
35										

COMMENTS: Grab sample collected @ 14.5-15 ftbg for VOCs. Composite sample collected from 0-15 ftbg for remaining parameters. Soil was classified according to the Unified Soil Classification System (USCS).

PROJECT NO.: 15-008-0265
BORING NO.: SB-03

LiRo Engineers, Inc.

TEST BORING LOG

BORING NO:	SB-04
SHEET:	4 of 19
JOB NO.:	15-008-0265
LOCATION:	Butler St./4th Ave.
GROUND ELEVATION:	NA
DATE STARTED:	August 30, 2016
DATE FINISHED:	September 7, 2016
DRILLER:	Kensley N.
GEOLOGIST:	Eva Jakubowska
REVIEWED BY:	

PROJECT: Trunk Watermain Replacement in Flatbush Ave, Brooklyn, NY

CLIENT: Department of Design and Construction - OEGS - BED798-11373

BORING CONTRACTOR: Associated Environmental Services, Ltd.

GROUNDWATER: NA

DATE	TIME	LEVEL	TYPE	TYPE	CAS.	SAMPLER	TUBE
			NA	DIA.		5' Macros	
				WT.			
				FALL			

DEPTH FEET	SAMPLE STRATA	"S" NO.	"N" NO.	BLOWS PER 6"	REC% RQD%	DESCRIPTION COLOR	CONSISTENCY HARDNESS	MATERIAL DESCRIPTION	USCS	REMARKS
1					NA	Brown	NA	0-6': Fine Sand and rocks.	FILL	Cleared to 6 ftbg 0.0 ppm Moist
6					60%	Brown	Loose	6-10': Fine to medium Sand, some rocks.		0.0 ppm Moist
10					40%	Brown	Loose	10-15': Fine to medium Sand and fill material.		0.0 ppm Moist
15								End of Boring at 15 ftbg.		
20										
25										
30										
35										

COMMENTS: Grab sample collected @ 14.5-15 ftbg for VOCs. Composite sample collected from 0-15 ftbg for remaining parameters. Soil was classified according to the Unified Soil Classification System (USCS).

PROJECT NO.: 15-008-0265

BORING NO.: SB-04

LiRo Engineers, Inc.

TEST BORING LOG

BORING NO:	SB-05
SHEET:	5 of 19
JOB NO.:	15-008-0265
LOCATION:	Quisenbury Pl.
GROUND ELEVATION:	NA
DATE STARTED:	August 30, 2016
DATE FINISHED:	September 7, 2016
DRILLER:	Kensley N.
GEOLOGIST:	Eva Jakubowska
REVIEWED BY:	

PROJECT: Trunk Watermain Replacement in Flatbush Ave, Brooklyn, NY
CLIENT: Department of Design and Construction - OEGS - BED798-11373
BORING CONTRACTOR: Associated Environmental Services, Ltd.

GROUNDWATER: NA					CAS.	SAMPLER	TUBE
DATE	TIME	LEVEL	TYPE	TYPE		5' Macros	
			NA	DIA.			
				WT.			
				FALL			

DEPTH FEET	STRATA	SAMPLE "S" NO.	SAMPLE "N" NO.	BLOWS PER 6"	REC% RQD%	COLOR	CONSISTENCY HARDNESS	MATERIAL DESCRIPTION	USCS	REMARKS
1					NA	Dark brown	NA	0-6": Concrete.	FILL	Cleared to 6 ftbg
6								6"-6': Fine to medium Sand, some rocks.		0.0 ppm Moist
10					40%	Dark grey	Loose	6-10': Fine to medium Sand, trace of silt.		0.0 ppm Moist
15					30%	Dark grey	Loose	10-15': Fine to medium Sand, trace of silt, and some rocks.		0.0 ppm Moist
20								End of Boring at 15 ftbg.		
25										
30										
35										

COMMENTS: Grab sample collected @ 14.5-15 ftbg for VOCs. Composite sample collected from 0-15 ftbg for remaining parameters. Soil was classified according to the Unified Soil Classification System (USCS).

PROJECT NO.: 15-008-0265
BORING NO.: SB-05

LiRo Engineers, Inc.

TEST BORING LOG

BORING NO:	SB-06
SHEET:	6 of 19
JOB NO.:	15-008-0265
LOCATION:	4th Ave./Douglass St.
GROUND ELEVATION:	NA
DATE STARTED:	August 31, 2016
DATE FINISHED:	September 12, 2016
DRILLER:	Kensley N.
GEOLOGIST:	Eva Jakubowska
REVIEWED BY:	

PROJECT: Trunk Watermain Replacement in Flatbush Ave, Brooklyn, NY

CLIENT: Department of Design and Construction - OEGS - BED798-11373

BORING CONTRACTOR: Associated Environmental Services, Ltd.

GROUNDWATER: NA

DATE	TIME	LEVEL	TYPE	TYPE	CAS.	SAMPLER	TUBE
			NA	DIA.		5' Macros	
				WT.			
				FALL			

DEPTH FEET	STRATA	"S" NO.	"N" NO.	BLOWS PER 6"	REC% RQD%	COLOR	CONSISTENCY HARDNESS	MATERIAL DESCRIPTION	USCS	REMARKS
1 – 6					NA	Brown	NA	0-6': Fine Sand, some large rocks.	FILL	Cleared to 6 ftbg 0.0 ppm Moist
6 – 10					100%	Brown	Medium loose	6-10': Fine to medium Sand.	SM	0.0 ppm Moist
10 – 15					60%	Brown	Medium loose	10-15': Fine to medium Sand.		0.0 ppm Moist
15								End of Boring at 15 ftbg.		

COMMENTS: Grab sample collected @ 14.5-15 ftbg for VOCs. Composite sample collected from 0-15 ftbg for remaining parameters. Soil was classified according to the Unified Soil Classification System (USCS).

PROJECT NO.: 15-008-0265

BORING NO.: SB-06

LiRo Engineers, Inc.

TEST BORING LOG

BORING NO:	SB-07
SHEET:	7 of 19
JOB NO.:	15-008-0265
LOCATION:	5th Ave./Douglass St.
GROUND ELEVATION:	NA
DATE STARTED:	August 31, 2016
DATE FINISHED:	September 12, 2016
DRILLER:	Kensley N.
GEOLOGIST:	Eva Jakubowska
REVIEWED BY:	

PROJECT: Trunk Watermain Replacement in Flatbush Ave, Brooklyn, NY

CLIENT: Department of Design and Construction - OEGS - BED798-11373

BORING CONTRACTOR: Associated Environmental Services, Ltd.

GROUNDWATER: NA

DATE	TIME	LEVEL	TYPE	TYPE	CAS.	SAMPLER	TUBE
						5' Macros	
			NA	DIA.			
				WT.			
				FALL			

DEPTH FEET	STRATA	SAMPLE "S" NO.	SAMPLE "N" NO.	BLOWS PER 6"	REC% RQD%	COLOR	CONSISTENCY HARDNESS	MATERIAL DESCRIPTION	USCS	REMARKS
1					NA	Brown	NA	0-6': Fine Sand, some rocks.	FILL	Cleared to 6 ftbg 0.0 ppm Moist
6										
10					30%	Reddish-brown	Medium dense	6-10': Fine to medium Sand.	SC	0.0 ppm Moist
15					30%	Reddish-brown	Medium dense	10-15': Fine to medium Sand, some clay.		0.0 ppm Moist
20								End of Boring at 15 ftbg.		
25										
30										
35										

COMMENTS: Grab sample collected @ 14.5-15 ftbg for VOCs. Composite sample collected from 0-15 ftbg for remaining parameters. Soil was classified according to the Unified Soil Classification System (USCS).

PROJECT NO.: 15-008-0265

BORING NO.: SB-07

LiRo Engineers, Inc.

TEST BORING LOG

BORING NO:	SB-08
SHEET:	8 of 19
JOB NO.:	15-008-0265
LOCATION:	Saint John's Pl.
GROUND ELEVATION:	NA
DATE STARTED:	August 31, 2016
DATE FINISHED:	September 12, 2016
DRILLER:	Kensley N.
GEOLOGIST:	Eva Jakubowska
REVIEWED BY:	

PROJECT: Trunk Watermain Replacement in Flatbush Ave, Brooklyn, NY

CLIENT: Department of Design and Construction - OEGS - BED798-11373

BORING CONTRACTOR: Associated Environmental Services, Ltd.

GROUNDWATER: NA

DATE	TIME	LEVEL	TYPE	TYPE	CAS.	SAMPLER	TUBE
						5' Macros	
			NA	DIA.			
				WT.			
				FALL			

DEPTH FEET	STRATA	SAMPLE "S" NO.	SAMPLE "N" NO.	BLOWS PER 6"	REC% RQD%	COLOR	CONSISTENCY HARDNESS	MATERIAL DESCRIPTION	USCS	REMARKS
1					NA	Brown	NA	0-6': Fine to medium Sand with fill material (red brick pieces, tree roots, rocks).	FILL	Cleared to 6 ftbg 0.0 ppm Moist
6										
					50%	Reddish-brown	Medium dense	6-10': Fine to medium Sand, some clay and rocks.		0.0 ppm Moist
10										
					10%	Reddish-brown	Medium dense	10-13': Fine to medium Sand, some clay and rocks.		0.0 ppm Moist
13										
15								End of boring at 13 ftbg due to refusal.		
20										
25										
30										
35										

COMMENTS: Grab sample collected @ 12.5-13 ftbg for VOCs. Composite sample collected from 0-13 ftbg for remaining parameters. Soil was classified according to the Unified Soil Classification System (USCS).

PROJECT NO.: 15-008-0265

BORING NO.: SB-08

LiRo Engineers, Inc.

TEST BORING LOG

BORING NO:	SB-09
SHEET:	9 of 19
JOB NO.:	15-008-0265
LOCATION:	Saint John's Pl./6th Ave.
GROUND ELEVATION:	NA
DATE STARTED:	September 1, 2016
DATE FINISHED:	September 12, 2016
DRILLER:	Kensley N.
GEOLOGIST:	Eva Jakubowska
REVIEWED BY:	

PROJECT: Trunk Watermain Replacement in Flatbush Ave, Brooklyn, NY

CLIENT: Department of Design and Construction - OEGS - BED798-11373

BORING CONTRACTOR: Associated Environmental Services, Ltd.

GROUNDWATER: NA					CAS.	SAMPLER	TUBE
DATE	TIME	LEVEL	TYPE	TYPE		5' Macros	
			NA	DIA.			
				WT.			
				FALL			

DEPTH FEET	SAMPLE STRATA	"S" NO.	"N" NO.	BLOWS PER 6"	REC% RQD%	DESCRIPTION COLOR	CONSISTENCY HARDNESS	MATERIAL DESCRIPTION	USCS	REMARKS
1					NA	Orange-brown	NA	0-6': Fine Sand with rocks.	FILL	Cleared to 6 ftbg 0.0 ppm Moist
6					90%	Reddish-brown	Dense	6-10': Fine Sand, trace of clay, and fill material.		0.0 ppm Moist
10								End of Boring at 10 ftbg due to refusal.		
15										
20										
25										
30										
35										

COMMENTS: Grab sample collected @ 9.5-10 ftbg for VOCs. Composite sample collected from 0-10 ftbg for remaining parameters. Soil was classified according to the Unified Soil Classification System (USCS).

PROJECT NO.: 15-008-0265

BORING NO.: SB-09

LiRo Engineers, Inc.

TEST BORING LOG

BORING NO:	SB-10
SHEET:	10 of 19
JOB NO.:	15-008-0265
LOCATION:	St. John's Pl.
GROUND ELEVATION:	NA
DATE STARTED:	September 1, 2016
DATE FINISHED:	September 8, 2016
DRILLER:	John Weiss
GEOLOGIST:	Eva Jakubowska
REVIEWED BY:	

PROJECT: Trunk Watermain Replacement in Flatbush Ave, Brooklyn, NY
CLIENT: Department of Design and Construction - OEGS - BED798-11373
BORING CONTRACTOR: Associated Environmental Services, Ltd.
GROUNDWATER: NA

DATE	TIME	LEVEL	TYPE	TYPE	CAS.	SAMPLER	TUBE
						5' Macros	
			NA	DIA.			
				WT.			
				FALL			

DEPTH FEET	STRATA	SAMPLE "S" NO.	SAMPLE "N" NO.	BLOWS PER 6"	REC% RQD%	DESCRIPTION COLOR	CONSISTENCY HARDNESS	MATERIAL DESCRIPTION	USCS	REMARKS
1					NA	Brown	NA	0-6': Fine Sand and rocks.	FILL	Cleared to 6 ftbg 0.0 ppm Moist
6					50%	Brown	Medium dense	6-10': Fine to medium Sand, trace of silt, and fill material.		0.0 ppm Moist
10					70%	Brown	Medium dense	10-15': Fine to medium Sand, trace of silt, and fill material.		0.0 ppm Moist
15								End of Boring at 15 ftbg.		
20										
25										
30										
35										

COMMENTS: Grab sample collected @ 14.5-15 ftbg for VOCs. Composite sample collected from 0-15 ftbg for remaining parameters. Soil was classified according to the Unified Soil Classification System (USCS).

PROJECT NO.: 15-008-0265
BORING NO.: SB-10

LiRo Engineers, Inc.

TEST BORING LOG

BORING NO:	SB-11
SHEET:	11 of 19
JOB NO.:	15-008-0265
LOCATION:	St. John's Pl./7th Ave.
GROUND ELEVATION:	NA
DATE STARTED:	September 2, 2016
DATE FINISHED:	September 9, 2016
DRILLER:	John Weiss
GEOLOGIST:	Eva Jakubowska
REVIEWED BY:	

PROJECT: Trunk Watermain Replacement in Flatbush Ave, Brooklyn, NY

CLIENT: Department of Design and Construction - OEGS - BED798-11373

BORING CONTRACTOR: Associated Environmental Services, Ltd.

GROUNDWATER: NA

DATE	TIME	LEVEL	TYPE	TYPE	CAS.	SAMPLER	TUBE
						5' Macros	
			NA	DIA.			
				WT.			
				FALL			

DEPTH FEET	SAMPLE STRATA	"S" NO.	"N" NO.	BLOWS PER 6"	REC% RQD%	DESCRIPTION COLOR	CONSISTENCY HARDNESS	MATERIAL DESCRIPTION	USCS	REMARKS
1					NA	Brown	NA	0-6': Fine Sand, some rocks.	FILL	Cleared to 6 ftbg 0.0 ppm Moist
6										
					40%	Brown	Loose	6-10': Fine Sand, trace of silt, and fill material.		0.0 ppm Moist
10										
					70%	Brown	Loose	10-15': Fine Sand, some silt.	SM	0.0 ppm Moist
15										
								End of Boring at 15 ftbg.		
20										
25										
30										
35										

COMMENTS: Grab sample collected @ 14.5-15 ftbg for VOCs. Composite sample collected from 0-15 ftbg for remaining parameters. Soil was classified according to the Unified Soil Classification System (USCS).

PROJECT NO.: 15-008-0265

BORING NO.: SB-11

LiRo Engineers, Inc.

TEST BORING LOG

BORING NO:	SB-12
SHEET:	12 of 19
JOB NO.:	15-008-0265
LOCATION:	St. John's Pl./7th Ave.
GROUND ELEVATION:	NA
DATE STARTED:	September 2, 2016
DATE FINISHED:	September 9, 2016
DRILLER:	John Weiss
GEOLOGIST:	Eva Jakubowska
REVIEWED BY:	

PROJECT: Trunk Watermain Replacement in Flatbush Ave, Brooklyn, NY

CLIENT: Department of Design and Construction - OEGS - BED798-11373

BORING CONTRACTOR: Associated Environmental Services, Ltd.

GROUNDWATER: NA

DATE	TIME	LEVEL	TYPE	TYPE	CAS.	SAMPLER	TUBE
						5' Macros	
			NA	DIA.			
				WT.			
				FALL			

DEPTH FEET	SAMPLE STRATA	"S" NO.	"N" NO.	BLOWS PER 6"	REC% RQD%	DESCRIPTION COLOR	CONSISTENCY HARDNESS	MATERIAL DESCRIPTION	USCS	REMARKS
1					NA	Brown	NA	0-6': Fine to medium Sand, with large rocks.	FILL	Cleared to 6 ftbg 0.0 ppm Moist
6					50%	Reddish-brown	Loose	6-10': Fine to medium Sand and fill material.		0.0 ppm Moist
10					70%	Reddish-brown	Loose	10-15': Fine to medium Sand.	SM	0.0 ppm Moist
15								End of Boring at 15 ftbg.		
20										
25										
30										
35										

COMMENTS: Grab sample collected @ 14.5-15 ftbg for VOCs. Composite sample collected from 0-15 ftbg for remaining parameters. Soil was classified according to the Unified Soil Classification System (USCS).

PROJECT NO.: 15-008-0265

BORING NO.: SB-12

LiRo Engineers, Inc.

TEST BORING LOG

BORING NO:	SB-13
SHEET:	13 of 19
JOB NO.:	15-008-0265
LOCATION:	St. John's Pl./8th Ave.
GROUND ELEVATION:	NA
DATE STARTED:	September 6, 2016
DATE FINISHED:	September 9, 2016
DRILLER:	John Weiss
GEOLOGIST:	Eva Jakubowska
REVIEWED BY:	

PROJECT: Trunk Watermain Replacement in Flatbush Ave, Brooklyn, NY
CLIENT: Department of Design and Construction - OEGS - BED798-11373
BORING CONTRACTOR: Associated Environmental Services, Ltd.
GROUNDWATER: NA

DATE	TIME	LEVEL	TYPE		CAS.	SAMPLER	TUBE
				TYPE		5' Macros	
			NA	DIA.			
				WT.			
				FALL			

DEPTH FEET	SAMPLE STRATA	"S" NO.	"N" NO.	BLOWS PER 6"	REC% RQD%	DESCRIPTION COLOR	CONSISTENCY HARDNESS	MATERIAL DESCRIPTION	USCS	REMARKS
1					NA	Reddish-brown	NA	0-6': Fine Sand, with rocks.	FILL	Cleared to 6 ftbg 0.0 ppm Moist
6					70%	Light reddish-brown	Medium dense	6-10': Fine Sand and silt, some rocks.		0.0 ppm Moist
10					100%	Reddish-brown	Medium dense	10-15': Fine to medium Sand, some silt and rocks.		0.0 ppm Moist
15								End of Boring at 15 ftbg.		
20										
25										
30										
35										

COMMENTS: Grab sample collected @ 14.5-15 ftbg for VOCs. Composite sample collected from 0-15 ftbg for remaining parameters. Soil was classified according to the Unified Soil Classification System (USCS).

PROJECT NO.: 15-008-0265
BORING NO.: SB-13

LiRo Engineers, Inc.

TEST BORING LOG

BORING NO:	SB-14
SHEET:	14 of 19
JOB NO.:	15-008-0265
LOCATION:	6th Ave./Park Pl.
GROUND ELEVATION:	NA
DATE STARTED:	September 1, 2016
DATE FINISHED:	September 8, 2016
DRILLER:	John Weiss
GEOLOGIST:	Eva Jakubowska
REVIEWED BY:	

PROJECT: Trunk Watermain Replacement in Flatbush Ave, Brooklyn, NY
CLIENT: Department of Design and Construction - OEGS - BED798-11373
BORING CONTRACTOR: Associated Environmental Services, Ltd.
GROUNDWATER: NA

DATE	TIME	LEVEL	TYPE	TYPE	CAS.	SAMPLER	TUBE
						5' Macros	
			NA	DIA.			
				WT.			
				FALL			

DEPTH FEET	STRATA	SAMPLE "S" NO.	SAMPLE "N" NO.	BLOWS PER 6"	REC% RQD%	DESCRIPTION COLOR	CONSISTENCY HARDNESS	MATERIAL DESCRIPTION	USCS	REMARKS
1					NA	Brown	NA	0-6': Fine to medium Sand, with rocks.	FILL	Cleared to 6 ftbg 0.0 ppm Moist
6					100%	Light brown	Medium dense	6-10': Fine to medium Sand with fragmented rock.		0.0 ppm Moist
10					50%	Light brown	Medium dense	10-15': Fine to medium Sand and fill material.		0.0 ppm Moist
15								End of Boring at 15 ftbg due to refusal.		
20										
25										
30										
35										

COMMENTS: Grab sample collected @ 14.5-15 ftbg for VOCs. Composite sample collected from 0-15 ftbg for remaining parameters. Soil was classified according to the Unified Soil Classification System (USCS).

PROJECT NO.: 15-008-0265
BORING NO.: SB-14

LiRo Engineers, Inc.

TEST BORING LOG

BORING NO:	SB-15
SHEET:	15 of 19
JOB NO.:	15-008-0265
LOCATION:	6th Ave./Park Pl.
GROUND ELEVATION:	NA
DATE STARTED:	September 1, 2016
DATE FINISHED:	September 8, 2016
DRILLER:	John Weiss
GEOLOGIST:	Eva Jakubowska
REVIEWED BY:	

PROJECT: Trunk Watermain Replacement in Flatbush Ave, Brooklyn, NY

CLIENT: Department of Design and Construction - OEGS - BED798-11373

BORING CONTRACTOR: Associated Environmental Services, Ltd.

GROUNDWATER: NA

DATE	TIME	LEVEL	TYPE		CAS.	SAMPLER	TUBE
				TYPE		5' Macros	
			NA	DIA.			
				WT.			
				FALL			

DEPTH FEET	SAMPLE STRATA	"S" NO.	"N" NO.	BLOWS PER 6"	REC% RQD%	DESCRIPTION COLOR	CONSISTENCY HARDNESS	MATERIAL DESCRIPTION	USCS	REMARKS
1					NA	Reddish-brown	NA	0-6': Fine Sand, trace of silt with rocks.	FILL	Cleared to 6 ftbg 0.0 ppm Moist
6					90%	Reddish-brown	Dense	6-9.5': fine to medium Sand, trace of silt, and fill material.		0.0 ppm Moist
9.5								End of Boring at 9.5 ftbg due to refusal.		
10										
15										
20										
25										
30										
35										

COMMENTS: Grab sample collected @ 9.0-9.5 ftbg for VOCs. Composite sample collected from 0-9.5 ftbg for remaining parameters. Soil was classified according to the Unified Soil Classification System (USCS).

PROJECT NO.: 15-008-0265

BORING NO.: SB-15

LiRo Engineers, Inc.

TEST BORING LOG

BORING NO:	SB-16
SHEET:	16 of 19
JOB NO.:	15-008-0265
LOCATION:	6th Ave./St. John's Pl.
GROUND ELEVATION:	NA
DATE STARTED:	September 1, 2016
DATE FINISHED:	September 8, 2016
DRILLER:	John Weiss
GEOLOGIST:	Eva Jakubowska
REVIEWED BY:	

PROJECT: Trunk Watermain Replacement in Flatbush Ave, Brooklyn, NY
CLIENT: Department of Design and Construction - OEGS - BED798-11373
BORING CONTRACTOR: Associated Environmental Services, Ltd.
GROUNDWATER: NA

DATE	TIME	LEVEL	TYPE	TYPE	CAS.	SAMPLER	TUBE
			NA	DIA.		5' Macros	
				WT.			
				FALL			

DEPTH FEET	STRATA	SAMPLE "S" NO.	SAMPLE "N" NO.	BLOWS PER 6"	REC% RQD%	DESCRIPTION COLOR	CONSISTENCY HARDNESS	MATERIAL DESCRIPTION	USCS	REMARKS
1					NA	Orangy-brown	NA	0-6': Fine Sand, trace of silt, some rocks.	FILL	Cleared to 6 ftbg 0.0 ppm Moist
6					50%	Reddish-brown to ivory	Medium dense	6-10': Fine to medium Sand, some silt and rocks.		0.0 ppm Moist
10					50%	Ivory-brown	Medium dense	10-15': Fine to medium Sand, some silt and rocks.		0.0 ppm Moist
15					30%	Ivory-brown	Medium dense	15-18': Fine to medium Sand, some silt and rocks.		0.0 ppm Moist
18								End of Boring at 18 ftbg.		
20										
25										
30										
35										

COMMENTS: Grab sample collected @ 17.5-18 ftbg for VOCs. Composite sample collected from 0-18 ftbg for remaining parameters. Soil was classified according to the Unified Soil Classification System (USCS).

PROJECT NO.: 15-008-0265
BORING NO.: SB-16

LiRo Engineers, Inc.

TEST BORING LOG

BORING NO:	SB-17
SHEET:	17 of 19
JOB NO.:	15-008-0265
LOCATION:	6th Ave./Lincoln Pl.
GROUND ELEVATION:	NA
DATE STARTED:	September 2, 2016
DATE FINISHED:	September 7, 2016
DRILLER:	Kensley N.
GEOLOGIST:	Eva Jakubowska
REVIEWED BY:	

PROJECT: Trunk Watermain Replacement in Flatbush Ave, Brooklyn, NY

CLIENT: Department of Design and Construction - OEGS - BED798-11373

BORING CONTRACTOR: Associated Environmental Services, Ltd.

GROUNDWATER: NA

DATE	TIME	LEVEL	TYPE	TYPE	CAS.	SAMPLER	TUBE
			NA	DIA.		5' Macros	
				WT.			
				FALL			

DEPTH FEET	STRATA	SAMPLE "S" NO.	SAMPLE "N" NO.	BLOWS PER 6"	REC% RQD%	COLOR	CONSISTENCY HARDNESS	MATERIAL DESCRIPTION	USCS	REMARKS
1					NA	Reddish-brown to ivory	NA	0-6': Fine Sand, trace of silt, some rocks.	FILL	Cleared to 6 ftbg 0.0 ppm Moist
6										
					50%	Dark reddish-brown	Medium dense	6-10': Fine to medium Sand and fill material.		0.0 ppm Moist
10										
					80%	Dark reddish-brown	Medium dense	10-15': Fine to medium Sand and fragmented rock.		0.0 ppm Moist
15										
					70%	Dark reddish-brown	Medium dense	15-18': Fine to medium Sand, some rocks.		0.0 ppm Moist
18										
20								End of Boring at 18 ftbg.		
25										
30										
35										

COMMENTS: Grab sample collected @ 17.5-18 ftbg for VOCs. Composite sample collected from 0-18 ftbg for remaining parameters. Soil was classified according to the Unified Soil Classification System (USCS).

PROJECT NO.: 15-008-0265

BORING NO.: SB-17

LiRo Engineers, Inc.

TEST BORING LOG

BORING NO:	SB-18
SHEET:	18 of 19
JOB NO.:	15-008-0265
LOCATION:	6th Ave./Union St.
GROUND ELEVATION:	NA
DATE STARTED:	September 2, 2016
DATE FINISHED:	September 12, 2016
DRILLER:	Kensley N.
GEOLOGIST:	Eva Jakubowska
REVIEWED BY:	

PROJECT: Trunk Watermain Replacement in Flatbush Ave, Brooklyn, NY

CLIENT: Department of Design and Construction - OEGS - BED798-11373

BORING CONTRACTOR: Associated Environmental Services, Ltd.

GROUNDWATER: NA

DATE	TIME	LEVEL	TYPE	TYPE	CAS.	SAMPLER	TUBE
						5' Macros	
			NA	DIA.			
				WT.			
				FALL			

DEPTH FEET	STRATA	SAMPLE "S" NO.	SAMPLE "N" NO.	BLOWS PER 6"	REC% RQD%	DESCRIPTION COLOR	CONSISTENCY HARDNESS	MATERIAL DESCRIPTION	USCS	REMARKS
1					NA	Reddish-brown	NA	0-6': Fine Sand, trace of silt, some rocks.	FILL	Cleared to 6 ftbg 0.0 ppm Moist
6					50%	Reddish-brown	Medium dense	6-10': Fine Sand, trace of clay, and fill material.		0.0 ppm Moist
10					70%	Reddish-brown to grey-brown	Medium dense	10-15': Fine Sand, trace of clay, and fill material.		0.0 ppm Moist
15					50%	Reddish-brown	Medium dense	15-18': Fine Sand, trace of clay, and fill material.		0.0 ppm Moist
18								End of Boring at 18 ftbg.		
20										
25										
30										
35										

COMMENTS: Grab sample collected @ 17.5-18 ftbg for VOCs. Composite sample collected from 0-18 ftbg for remaining parameters. Soil was classified according to the Unified Soil Classification System (USCS).

PROJECT NO.: 15-008-0265

BORING NO.: SB-18

LiRo Engineers, Inc.

TEST BORING LOG

BORING NO:	SB-19
SHEET:	19 of 19
JOB NO.:	15-008-0265
LOCATION:	
GROUND ELEVATION:	
DATE STARTED:	
DATE FINISHED:	
DRILLER:	
GEOLOGIST:	
REVIEWED BY:	

PROJECT: Trunk Watermain Replacement in Flatbush Ave, Brooklyn, NY
CLIENT: Department of Design and Construction - OEGS - BED798-11373
BORING CONTRACTOR: Associated Environmental Services, Ltd.

GROUNDWATER: NA					CAS.	SAMPLER	TUBE
DATE	TIME	LEVEL	TYPE	TYPE		5' Macros	
			NA	DIA.			
				WT.			
				FALL			

DEPTH FEET	SAMPLE STRATA	"S" NO.	"N" NO.	BLOWS PER 6"	REC% RQD%	DESCRIPTION COLOR	CONSISTENCY HARDNESS	MATERIAL DESCRIPTION	USCS	REMARKS
1						Boring not installed due to utilities under the sidewalk.				
6										
10										
15										
18										
20										
25										
30										
35										

COMMENTS:

PROJECT NO.: 15-008-0265
BORING NO.: SB-19

LiRo Engineers, Inc.

TEST BORING LOG

BORING NO:	SB-20
SHEET:	20 of 19
JOB NO.:	15-008-0265
LOCATION:	8th Ave./Lincoln Pl.
GROUND ELEVATION:	NA
DATE STARTED:	September 6, 2016
DATE FINISHED:	September 9, 2016
DRILLER:	John Weiss
GEOLOGIST:	Eva Jakubowska
REVIEWED BY:	

PROJECT: Trunk Watermain Replacement in Flatbush Ave, Brooklyn, NY

CLIENT: Department of Design and Construction - OEGS - BED798-11373

BORING CONTRACTOR: Associated Environmental Services, Ltd.

GROUNDWATER: NA

DATE	TIME	LEVEL	TYPE	TYPE	CAS.	SAMPLER	TUBE
						5' Macros	
			NA	DIA.			
				WT.			
				FALL			

DEPTH FEET	STRATA	SAMPLE "S" NO.	SAMPLE "N" NO.	BLOWS PER 6"	REC% RQD%	DESCRIPTION COLOR	CONSISTENCY HARDNESS	MATERIAL DESCRIPTION	USCS	REMARKS
1					NA	Brown	NA	0-6': Fine Sand, some clay and rocks.	FILL	Cleared to 6 ftbg 0.0 ppm Moist
6					40%	Dark brown	Medium dense	6-10': Fine to medium Sand, clay and rocks.		0.0 ppm Moist
10					80%	Dark brown	Medium dense	10-15': Fine to medium Sand, clay and rocks.		0.0 ppm Moist
15								End of Boring at 15 ftbg.		
20										
25										
30										
35										

COMMENTS: Grab sample collected @ 14.5-15 ftbg for VOCs. Composite sample collected from 0-15 ftbg for remaining parameters. Soil was classified according to the Unified Soil Classification System (USCS).

PROJECT NO.: 15-008-0265

BORING NO.: SB-20

APPENDIX C
LABORATORY ANALYTICAL RESULTS

Included on Attached CD

Technical Report

prepared for:

LiRo Engineers
690 Delaware Ave.
Buffalo NY, 14209-2202
Attention: Amy Hewson

Report Date: 09/16/2016
Client Project ID: BEGS or OEGS (15-008-0265)
York Project (SDG) No.: 16I0323

CT Cert. No. PH-0723 New Jersey Cert. No. CT-005 New York Cert. No. 10854 PA Cert. No. 68-04440

120 RESEARCH DRIVE STRATFORD, CT 06615 (203) 325-1371 FAX (203) 357-0166

Report Date: 09/16/2016
Client Project ID: BEGS or OEGS (15-008-0265)
York Project (SDG) No.: 16I0323

LiRo Engineers
690 Delaware Ave.
Buffalo NY, 14209-2202
Attention: Amy Hewson

Purpose and Results

This report contains the analytical data for the sample(s) identified on the attached chain-of-custody received in our laboratory on September 09, 2016 and listed below. The project was identified as your project: **BEGS or OEGS (15-008-0265)**.

The analyses were conducted utilizing appropriate EPA, Standard Methods, and ASTM methods as detailed in the data summary tables.

All samples were received in proper condition meeting the customary acceptance requirements for environmental samples except those indicated under the Notes section of this report.

All analyses met the method and laboratory standard operating procedure requirements except as indicated by any data flags, the meaning of which are explained in the attachment to this report, and case narrative if applicable.

The results of the analyses, which are all reported on dry weight basis (soils) unless otherwise noted, are detailed in the following pages.

Please contact Client Services at 203.325.1371 with any questions regarding this report.

York Sample ID	Client Sample ID	Matrix	Date Collected	Date Received
16I0323-01	SB-01-14.5-15.0'	Soil	09/07/2016	09/09/2016
16I0323-02	SB-01-Comp	Soil	09/07/2016	09/09/2016
16I0323-03	SB-02-14.5-15.0'	Soil	09/07/2016	09/09/2016
16I0323-04	SB-02-Comp	Soil	09/07/2016	09/09/2016
16I0323-05	SB-04-14.5-15.0'	Soil	09/07/2016	09/09/2016
16I0323-06	SB-04-Comp	Soil	09/07/2016	09/09/2016
16I0323-07	SB-05-14.5-15.0'	Soil	09/07/2016	09/09/2016
16I0323-08	SB-05-Comp	Soil	09/07/2016	09/09/2016
16I0323-09	SB-17-17.5-18.0'	Soil	09/07/2016	09/09/2016
16I0323-10	SB-17-Comp	Soil	09/07/2016	09/09/2016
16I0323-11	SB-03-14.5-15.0'	Soil	09/08/2016	09/09/2016
16I0323-12	SB-03-Comp	Soil	09/08/2016	09/09/2016
16I0323-13	SB-14-14.5-15.0'	Soil	09/08/2016	09/09/2016
16I0323-14	SB-14-Comp	Soil	09/08/2016	09/09/2016
16I0323-15	SB-15-9.0-9.5'	Soil	09/08/2016	09/09/2016
16I0323-16	SB-15-Comp	Soil	09/08/2016	09/09/2016
16I0323-17	SB-16-17.5-18.0'	Soil	09/08/2016	09/09/2016
16I0323-18	SB-16-Comp	Soil	09/08/2016	09/09/2016
16I0323-19	SB-10-14.5-15.0'	Soil	09/08/2016	09/09/2016
16I0323-20	SB-10-Comp	Soil	09/08/2016	09/09/2016

General Notes for York Project (SDG) No.: 16I0323

1. The RLs and MDLs (Reporting Limit and Method Detection Limit respectively) reported are adjusted for any dilution necessary due to the levels of target and/or non-target analytes and matrix interference. The RL(REPORTING LIMIT) is based upon the lowest standard utilized for the calibration where applicable.
2. Samples are retained for a period of thirty days after submittal of report, unless other arrangements are made.
3. York's liability for the above data is limited to the dollar value paid to York for the referenced project.
4. This report shall not be reproduced without the written approval of York Analytical Laboratories, Inc.
5. All samples were received in proper condition for analysis with proper documentation, unless otherwise noted.
6. All analyses conducted met method or Laboratory SOP requirements. See the Qualifiers and/or Narrative sections for further information.
7. It is noted that no analyses reported herein were subcontracted to another laboratory, unless noted in the report.
8. This report reflects results that relate only to the samples submitted on the attached chain-of-custody form(s) received by York.

Approved By: **Date:** 09/16/2016

Benjamin Gulizia
Laboratory Director

Sample Information

Client Sample ID: SB-01-14.5-15.0' **York Sample ID:** 16I0323-01

York Project (SDG) No.	Client Project ID	Matrix	Collection Date/Time	Date Received
16I0323	BEGS or OEGS (15-008-0265)	Soil	September 7, 2016 10:10 am	09/09/2016

Volatile Organics, 8260 - Comprehensive **Log-in Notes:** VOA-CONT **Sample Notes:** VOA-CONT

Sample Prepared by Method: EPA 5035A

CAS No.	Parameter	Result	Flag	Units	Reported to LOD/MDL	LOQ	Dilution	Reference Method	Date/Time Prepared	Date/Time Analyzed	Analyst
630-20-6	1,1,1,2-Tetrachloroethane	ND		mg/kg dry	0.0027	0.0054	1	EPA 8260C Certifications: CTDOH,NELAC-NY10854,NJDEP	09/14/2016 18:55	09/15/2016 01:47	SS
71-55-6	1,1,1-Trichloroethane	ND		mg/kg dry	0.0027	0.0054	1	EPA 8260C Certifications: CTDOH,NELAC-NY10854,NJDEP,PADEP	09/14/2016 18:55	09/15/2016 01:47	SS
79-34-5	1,1,2,2-Tetrachloroethane	ND		mg/kg dry	0.0027	0.0054	1	EPA 8260C Certifications: CTDOH,NELAC-NY10854,NJDEP,PADEP	09/14/2016 18:55	09/15/2016 01:47	SS
76-13-1	1,1,2-Trichloro-1,2,2-trifluoroethane (Freon 113)	ND		mg/kg dry	0.0027	0.0054	1	EPA 8260C Certifications: CTDOH,NELAC-NY10854,NJDEP	09/14/2016 18:55	09/15/2016 01:47	SS
79-00-5	1,1,2-Trichloroethane	ND		mg/kg dry	0.0027	0.0054	1	EPA 8260C Certifications: CTDOH,NELAC-NY10854,NJDEP,PADEP	09/14/2016 18:55	09/15/2016 01:47	SS
75-34-3	1,1-Dichloroethane	ND		mg/kg dry	0.0027	0.0054	1	EPA 8260C Certifications: CTDOH,NELAC-NY10854,NJDEP,PADEP	09/14/2016 18:55	09/15/2016 01:47	SS
[illegible]-4	1,1-Dichloroethylene	ND		mg/kg dry	0.0027	0.0054	1	EPA 8260C Certifications: CTDOH,NELAC-NY10854,NJDEP,PADEP	09/14/2016 18:55	09/15/2016 01:47	SS
87-61-6	1,2,3-Trichlorobenzene	ND		mg/kg dry	0.0027	0.0054	1	EPA 8260C Certifications: NELAC-NY10854,NJDEP	09/14/2016 18:55	09/15/2016 01:47	SS
96-18-4	1,2,3-Trichloropropane	ND		mg/kg dry	0.0027	0.0054	1	EPA 8260C Certifications: NELAC-NY10854,NJDEP	09/14/2016 18:55	09/15/2016 01:47	SS
120-82-1	1,2,4-Trichlorobenzene	ND		mg/kg dry	0.0027	0.0054	1	EPA 8260C Certifications: NELAC-NY10854,NJDEP	09/14/2016 18:55	09/15/2016 01:47	SS
95-63-6	1,2,4-Trimethylbenzene	ND		mg/kg dry	0.0027	0.0054	1	EPA 8260C Certifications: CTDOH,NELAC-NY10854,NJDEP	09/14/2016 18:55	09/15/2016 01:47	SS
96-12-8	1,2-Dibromo-3-chloropropane	ND		mg/kg dry	0.0027	0.0054	1	EPA 8260C Certifications: CTDOH,NELAC-NY10854,NJDEP	09/14/2016 18:55	09/15/2016 01:47	SS
106-93-4	1,2-Dibromoethane	ND		mg/kg dry	0.0027	0.0054	1	EPA 8260C Certifications: CTDOH,NELAC-NY10854,NJDEP	09/14/2016 18:55	09/15/2016 01:47	SS
95-50-1	1,2-Dichlorobenzene	ND		mg/kg dry	0.0027	0.0054	1	EPA 8260C Certifications: CTDOH,NELAC-NY10854,NJDEP,PADEP	09/14/2016 18:55	09/15/2016 01:47	SS
107-06-2	1,2-Dichloroethane	ND		mg/kg dry	0.0027	0.0054	1	EPA 8260C Certifications: CTDOH,NELAC-NY10854,NJDEP,PADEP	09/14/2016 18:55	09/15/2016 01:47	SS
78-87-5	1,2-Dichloropropane	ND		mg/kg dry	0.0027	0.0054	1	EPA 8260C Certifications: CTDOH,NELAC-NY10854,NJDEP	09/14/2016 18:55	09/15/2016 01:47	SS
108-67-8	1,3,5-Trimethylbenzene	ND		mg/kg dry	0.0027	0.0054	1	EPA 8260C Certifications: CTDOH,NELAC-NY10854,NJDEP	09/14/2016 18:55	09/15/2016 01:47	SS
541-73-1	1,3-Dichlorobenzene	ND		mg/kg dry	0.0027	0.0054	1	EPA 8260C Certifications: CTDOH,NELAC-NY10854,NJDEP,PADEP	09/14/2016 18:55	09/15/2016 01:47	SS
106-46-7	1,4-Dichlorobenzene	ND		mg/kg dry	0.0027	0.0054	1	EPA 8260C Certifications: CTDOH,NELAC-NY10854,NJDEP,PADEP	09/14/2016 18:55	09/15/2016 01:47	SS
123-91-1	1,4-Dioxane	ND		mg/kg dry	0.054	0.11	1	EPA 8260C Certifications: NELAC-NY10854,NJDEP	09/14/2016 18:55	09/15/2016 01:47	SS
[illegible]3	2-Butanone	ND		mg/kg dry	0.0027	0.0054	1	EPA 8260C Certifications: CTDOH,NELAC-NY10854,NJDEP	09/14/2016 18:55	09/15/2016 01:47	SS

Sample Information

Client Sample ID: SB-01-14.5-15.0'

York Sample ID: 16I0323-01

York Project (SDG) No.	Client Project ID	Matrix	Collection Date/Time	Date Received
16I0323	BEGS or OEGS (15-008-0265)	Soil	September 7, 2016 10:10 am	09/09/2016

Volatile Organics, 8260 - Comprehensive

Log-in Notes: VOA-CONT **Sample Notes:** VOA-CONT

Sample Prepared by Method: EPA 5035A

CAS No.	Parameter	Result	Flag	Units	Reported to LOD/MDL	LOQ	Dilution	Reference Method	Date/Time Prepared	Date/Time Analyzed	Analyst
591-78-6	2-Hexanone	ND		mg/kg dry	0.0027	0.0054	1	EPA 8260C Certifications: CTDOH,NELAC-NY10854,NJDEP	09/14/2016 18:55	09/15/2016 01:47	SS
108-10-1	4-Methyl-2-pentanone	ND		mg/kg dry	0.0027	0.0054	1	EPA 8260C Certifications: CTDOH,NELAC-NY10854,NJDEP	09/14/2016 18:55	09/15/2016 01:47	SS
67-64-1	**Acetone**	**0.0081**	J	mg/kg dry	0.0054	0.011	1	EPA 8260C Certifications: CTDOH,NELAC-NY10854,NJDEP	09/14/2016 18:55	09/15/2016 01:47	SS
107-02-8	Acrolein	ND		mg/kg dry	0.0054	0.011	1	EPA 8260C Certifications: CTDOH,NELAC-NY10854,NJDEP	09/14/2016 18:55	09/15/2016 01:47	SS
107-13-1	Acrylonitrile	ND		mg/kg dry	0.0027	0.0054	1	EPA 8260C Certifications: CTDOH,NELAC-NY10854,NJDEP	09/14/2016 18:55	09/15/2016 01:47	SS
71-43-2	Benzene	ND		mg/kg dry	0.0027	0.0054	1	EPA 8260C Certifications: CTDOH,NELAC-NY10854,NJDEP,PADEP	09/14/2016 18:55	09/15/2016 01:47	SS
74-97-5	Bromochloromethane	ND		mg/kg dry	0.0027	0.0054	1	EPA 8260C Certifications: NELAC-NY10854,NJDEP	09/14/2016 18:55	09/15/2016 01:47	SS
75-27-4	Bromodichloromethane	ND		mg/kg dry	0.0027	0.0054	1	EPA 8260C Certifications: CTDOH,NELAC-NY10854,NJDEP,PADEP	09/14/2016 18:55	09/15/2016 01:47	SS
75-25-2	Bromoform	ND		mg/kg dry	0.0027	0.0054	1	EPA 8260C Certifications: CTDOH,NELAC-NY10854,NJDEP,PADEP	09/14/2016 18:55	09/15/2016 01:47	SS
74-83-9	Bromomethane	ND		mg/kg dry	0.0027	0.0054	1	EPA 8260C Certifications: CTDOH,NELAC-NY10854,NJDEP,PADEP	09/14/2016 18:55	09/15/2016 01:47	SS
75-15-0	Carbon disulfide	ND		mg/kg dry	0.0027	0.0054	1	EPA 8260C Certifications: CTDOH,NELAC-NY10854,NJDEP	09/14/2016 18:55	09/15/2016 01:47	SS
56-23-5	Carbon tetrachloride	ND		mg/kg dry	0.0027	0.0054	1	EPA 8260C Certifications: CTDOH,NELAC-NY10854,NJDEP,PADEP	09/14/2016 18:55	09/15/2016 01:47	SS
108-90-7	Chlorobenzene	ND		mg/kg dry	0.0027	0.0054	1	EPA 8260C Certifications: CTDOH,NELAC-NY10854,NJDEP,PADEP	09/14/2016 18:55	09/15/2016 01:47	SS
75-00-3	Chloroethane	ND		mg/kg dry	0.0027	0.0054	1	EPA 8260C Certifications: CTDOH,NELAC-NY10854,NJDEP,PADEP	09/14/2016 18:55	09/15/2016 01:47	SS
67-66-3	Chloroform	ND		mg/kg dry	0.0027	0.0054	1	EPA 8260C Certifications: CTDOH,NELAC-NY10854,NJDEP,PADEP	09/14/2016 18:55	09/15/2016 01:47	SS
74-87-3	Chloromethane	ND		mg/kg dry	0.0027	0.0054	1	EPA 8260C Certifications: CTDOH,NELAC-NY10854,NJDEP,PADEP	09/14/2016 18:55	09/15/2016 01:47	SS
156-59-2	cis-1,2-Dichloroethylene	ND		mg/kg dry	0.0027	0.0054	1	EPA 8260C Certifications: CTDOH,NELAC-NY10854,NJDEP	09/14/2016 18:55	09/15/2016 01:47	SS
10061-01-5	cis-1,3-Dichloropropylene	ND		mg/kg dry	0.0027	0.0054	1	EPA 8260C Certifications: CTDOH,NELAC-NY10854,NJDEP,PADEP	09/14/2016 18:55	09/15/2016 01:47	SS
110-82-7	Cyclohexane	ND		mg/kg dry	0.0027	0.0054	1	EPA 8260C Certifications: NELAC-NY10854,NJDEP	09/14/2016 18:55	09/15/2016 01:47	SS
124-48-1	Dibromochloromethane	ND		mg/kg dry	0.0027	0.0054	1	EPA 8260C Certifications: NELAC-NY10854,NJDEP,PADEP	09/14/2016 18:55	09/15/2016 01:47	SS
74-95-3	Dibromomethane	ND		mg/kg dry	0.0027	0.0054	1	EPA 8260C Certifications: NELAC-NY10854,NJDEP	09/14/2016 18:55	09/15/2016 01:47	SS
75-71-8	Dichlorodifluoromethane	ND		mg/kg dry	0.0027	0.0054	1	EPA 8260C Certifications: NELAC-NY10854,NJDEP	09/14/2016 18:55	09/15/2016 01:47	SS

Sample Information

Client Sample ID: SB-01-14.5-15.0' **York Sample ID:** 16I0323-01

York Project (SDG) No.	Client Project ID	Matrix	Collection Date/Time	Date Received
16I0323	BEGS or OEGS (15-008-0265)	Soil	September 7, 2016 10:10 am	09/09/2016

Volatile Organics, 8260 - Comprehensive

Log-in Notes: VOA-CONT **Sample Notes:** VOA-CONT

Sample Prepared by Method: EPA 5035A

CAS No.	Parameter	Result	Flag	Units	Reported to LOD/MDL	LOQ	Dilution	Reference Method	Date/Time Prepared	Date/Time Analyzed	Analyst
100-41-4	Ethyl Benzene	ND		mg/kg dry	0.0027	0.0054	1	EPA 8260C Certifications: CTDOH,NELAC-NY10854,NJDEP,PADEP	09/14/2016 18:55	09/15/2016 01:47	SS
87-68-3	Hexachlorobutadiene	ND		mg/kg dry	0.0027	0.0054	1	EPA 8260C Certifications: NELAC-NY10854,NJDEP	09/14/2016 18:55	09/15/2016 01:47	SS
98-82-8	Isopropylbenzene	ND		mg/kg dry	0.0027	0.0054	1	EPA 8260C Certifications: CTDOH,NELAC-NY10854,NJDEP	09/14/2016 18:55	09/15/2016 01:47	SS
79-20-9	Methyl acetate	ND		mg/kg dry	0.0027	0.0054	1	EPA 8260C Certifications: NELAC-NY10854,NJDEP	09/14/2016 18:55	09/15/2016 01:47	SS
1634-04-4	Methyl tert-butyl ether (MTBE)	ND		mg/kg dry	0.0027	0.0054	1	EPA 8260C Certifications: CTDOH,NELAC-NY10854,NJDEP	09/14/2016 18:55	09/15/2016 01:47	SS
108-87-2	Methylcyclohexane	ND		mg/kg dry	0.0027	0.0054	1	EPA 8260C Certifications: NELAC-NY10854,NJDEP	09/14/2016 18:55	09/15/2016 01:47	SS
75-09-2	Methylene chloride	ND		mg/kg dry	0.0054	0.011	1	EPA 8260C Certifications: CTDOH,NELAC-NY10854,NJDEP,PADEP	09/14/2016 18:55	09/15/2016 01:47	SS
[illegible]1-8	n-Butylbenzene	ND		mg/kg dry	0.0027	0.0054	1	EPA 8260C Certifications: CTDOH,NELAC-NY10854,NJDEP	09/14/2016 18:55	09/15/2016 01:47	SS
103-65-1	n-Propylbenzene	ND		mg/kg dry	0.0027	0.0054	1	EPA 8260C Certifications: CTDOH,NELAC-NY10854,NJDEP	09/14/2016 18:55	09/15/2016 01:47	SS
95-47-6	o-Xylene	ND		mg/kg dry	0.0027	0.0054	1	EPA 8260C Certifications: CTDOH,NELAC-NY10854	09/14/2016 18:55	09/15/2016 01:47	SS
179601-23-1	p- & m- Xylenes	ND		mg/kg dry	0.0054	0.011	1	EPA 8260C Certifications: CTDOH,NELAC-NY10854	09/14/2016 18:55	09/15/2016 01:47	SS
99-87-6	p-Isopropyltoluene	ND		mg/kg dry	0.0027	0.0054	1	EPA 8260C Certifications: CTDOH,NELAC-NY10854,NJDEP	09/14/2016 18:55	09/15/2016 01:47	SS
135-98-8	sec-Butylbenzene	ND		mg/kg dry	0.0027	0.0054	1	EPA 8260C Certifications: CTDOH,NELAC-NY10854,NJDEP	09/14/2016 18:55	09/15/2016 01:47	SS
100-42-5	Styrene	ND		mg/kg dry	0.0027	0.0054	1	EPA 8260C Certifications: CTDOH,NELAC-NY10854,NJDEP	09/14/2016 18:55	09/15/2016 01:47	SS
75-65-0	tert-Butyl alcohol (TBA)	ND		mg/kg dry	0.0027	0.0054	1	EPA 8260C Certifications: NELAC-NY10854,NJDEP	09/14/2016 18:55	09/15/2016 01:47	SS
98-06-6	tert-Butylbenzene	ND		mg/kg dry	0.0027	0.0054	1	EPA 8260C Certifications: CTDOH,NELAC-NY10854,NJDEP	09/14/2016 18:55	09/15/2016 01:47	SS
127-18-4	Tetrachloroethylene	ND		mg/kg dry	0.0027	0.0054	1	EPA 8260C Certifications: CTDOH,NELAC-NY10854,NJDEP,PADEP	09/14/2016 18:55	09/15/2016 01:47	SS
108-88-3	Toluene	ND		mg/kg dry	0.0027	0.0054	1	EPA 8260C Certifications: CTDOH,NELAC-NY10854,NJDEP,PADEP	09/14/2016 18:55	09/15/2016 01:47	SS
156-60-5	trans-1,2-Dichloroethylene	ND		mg/kg dry	0.0027	0.0054	1	EPA 8260C Certifications: CTDOH,NELAC-NY10854,NJDEP	09/14/2016 18:55	09/15/2016 01:47	SS
10061-02-6	trans-1,3-Dichloropropylene	ND		mg/kg dry	0.0027	0.0054	1	EPA 8260C Certifications: CTDOH,NELAC-NY10854,NJDEP,PADEP	09/14/2016 18:55	09/15/2016 01:47	SS
79-01-6	Trichloroethylene	ND		mg/kg dry	0.0027	0.0054	1	EPA 8260C Certifications: CTDOH,NELAC-NY10854,NJDEP,PADEP	09/14/2016 18:55	09/15/2016 01:47	SS
[illegible]4	Trichlorofluoromethane	ND		mg/kg dry	0.0027	0.0054	1	EPA 8260C Certifications: CTDOH,NELAC-NY10854,NJDEP,PADEP	09/14/2016 18:55	09/15/2016 01:47	SS

Sample Information

Client Sample ID: SB-01-14.5-15.0' **York Sample ID:** 16I0323-01

York Project (SDG) No.	Client Project ID	Matrix	Collection Date/Time	Date Received
16I0323	BEGS or OEGS (15-008-0265)	Soil	September 7, 2016 10:10 am	09/09/2016

Volatile Organics, 8260 - Comprehensive

Log-in Notes: VOA-CONT **Sample Notes:** VOA-CONT

Sample Prepared by Method: EPA 5035A

CAS No.	Parameter	Result	Flag	Units	Reported to LOD/MDL	LOQ	Dilution	Reference Method	Date/Time Prepared	Date/Time Analyzed	Analyst
75-01-4	Vinyl Chloride	ND		mg/kg dry	0.0027	0.0054	1	EPA 8260C Certifications: CTDOH,NELAC-NY10854,NJDEP,PADEP	09/14/2016 18:55	09/15/2016 01:47	SS
1330-20-7	Xylenes, Total	ND		mg/kg dry	0.0081	0.016	1	EPA 8260C Certifications: CTDOH,NELAC-NY10854,NJDEP,PADEP	09/14/2016 18:55	09/15/2016 01:47	SS

	Surrogate Recoveries	Result	Acceptance Range
17060-07-0	*Surrogate: 1,2-Dichloroethane-d4*	*97.4 %*	*77-125*
2037-26-5	*Surrogate: Toluene-d8*	*99.4 %*	*85-120*
460-00-4	*Surrogate: p-Bromofluorobenzene*	*103 %*	*76-130*

Total Solids

Log-in Notes: VOA-CONT **Sample Notes:**

Sample Prepared by Method: % Solids Prep

CAS No.	Parameter	Result	Flag	Units	LOD/MDL	Reported to LOQ	Dilution	Reference Method	Date/Time Prepared	Date/Time Analyzed	Analyst
solids	*** % Solids**	**92.4**		%	0.100	0.100	1	SM 2540G Certifications: CTDOH	09/15/2016 08:08	09/15/2016 14:32	LAE

Sample Information

Client Sample ID: SB-01-Comp **York Sample ID:** 16I0323-02

York Project (SDG) No.	Client Project ID	Matrix	Collection Date/Time	Date Received
16I0323	BEGS or OEGS (15-008-0265)	Soil	September 7, 2016 10:15 am	09/09/2016

Semi-Volatiles, PAH Target List

Log-in Notes: VOA-CONT **Sample Notes:**

Sample Prepared by Method: EPA 3550C

CAS No.	Parameter	Result	Flag	Units	Reported to LOD/MDL	LOQ	Dilution	Reference Method	Date/Time Prepared	Date/Time Analyzed	Analyst
91-57-6	2-Methylnaphthalene	ND		mg/kg dry	0.0557	0.111	2	EPA 8270D Certifications: CTDOH,NELAC-NY10854,NJDEP,PADEP	09/15/2016 08:12	09/16/2016 10:37	KH
83-32-9	Acenaphthene	ND		mg/kg dry	0.0557	0.111	2	EPA 8270D Certifications: CTDOH,NELAC-NY10854,NJDEP,PADEP	09/15/2016 08:12	09/16/2016 10:37	KH
208-96-8	Acenaphthylene	ND		mg/kg dry	0.0557	0.111	2	EPA 8270D Certifications: CTDOH,NELAC-NY10854,NJDEP,PADEP	09/15/2016 08:12	09/16/2016 10:37	KH
120-12-7	Anthracene	ND		mg/kg dry	0.0557	0.111	2	EPA 8270D Certifications: CTDOH,NELAC-NY10854,NJDEP,PADEP	09/15/2016 08:12	09/16/2016 10:37	KH
56-55-3	Benzo(a)anthracene	ND		mg/kg dry	0.0557	0.111	2	EPA 8270D Certifications: CTDOH,NELAC-NY10854,NJDEP,PADEP	09/15/2016 08:12	09/16/2016 10:37	KH
50-32-8	Benzo(a)pyrene	ND		mg/kg dry	0.0557	0.111	2	EPA 8270D Certifications: CTDOH,NELAC-NY10854,NJDEP,PADEP	09/15/2016 08:12	09/16/2016 10:37	KH
205-99-2	Benzo(b)fluoranthene	ND		mg/kg dry	0.0557	0.111	2	EPA 8270D Certifications: CTDOH,NELAC-NY10854,NJDEP,PADEP	09/15/2016 08:12	09/16/2016 10:37	KH

Sample Information

Client Sample ID: SB-01-Comp

York Sample ID: 16I0323-02

York Project (SDG) No.	Client Project ID	Matrix	Collection Date/Time	Date Received
16I0323	BEGS or OEGS (15-008-0265)	Soil	September 7, 2016 10:15 am	09/09/2016

Semi-Volatiles, PAH Target List

Log-in Notes: VOA-CONT **Sample Notes:**

Sample Prepared by Method: EPA 3550C

CAS No.	Parameter	Result	Flag	Units	Reported to LOD/MDL	LOQ	Dilution	Reference Method	Date/Time Prepared	Date/Time Analyzed	Analyst
191-24-2	Benzo(g,h,i)perylene	ND		mg/kg dry	0.0557	0.111	2	EPA 8270D Certifications: CTDOH,NELAC-NY10854,NJDEP,PADEP	09/15/2016 08:12	09/16/2016 10:37	KH
207-08-9	Benzo(k)fluoranthene	ND		mg/kg dry	0.0557	0.111	2	EPA 8270D Certifications: CTDOH,NELAC-NY10854,NJDEP,PADEP	09/15/2016 08:12	09/16/2016 10:37	KH
218-01-9	Chrysene	ND		mg/kg dry	0.0557	0.111	2	EPA 8270D Certifications: CTDOH,NELAC-NY10854,NJDEP,PADEP	09/15/2016 08:12	09/16/2016 10:37	KH
53-70-3	Dibenzo(a,h)anthracene	ND		mg/kg dry	0.0557	0.111	2	EPA 8270D Certifications: CTDOH,NELAC-NY10854,NJDEP,PADEP	09/15/2016 08:12	09/16/2016 10:37	KH
206-44-0	Fluoranthene	ND		mg/kg dry	0.0557	0.111	2	EPA 8270D Certifications: CTDOH,NELAC-NY10854,NJDEP,PADEP	09/15/2016 08:12	09/16/2016 10:37	KH
86-73-7	Fluorene	ND		mg/kg dry	0.0557	0.111	2	EPA 8270D Certifications: NELAC-NY10854,NJDEP,PADEP	09/15/2016 08:12	09/16/2016 10:37	KH
193-39-5	Indeno(1,2,3-cd)pyrene	ND		mg/kg dry	0.0557	0.111	2	EPA 8270D Certifications: CTDOH,NELAC-NY10854,NJDEP,PADEP	09/15/2016 08:12	09/16/2016 10:37	KH
[illegible]-3	Naphthalene	ND		mg/kg dry	0.0557	0.111	2	EPA 8270D Certifications: CTDOH,NELAC-NY10854,NJDEP,PADEP	09/15/2016 08:12	09/16/2016 10:37	KH
85-01-8	Phenanthrene	ND		mg/kg dry	0.0557	0.111	2	EPA 8270D Certifications: CTDOH,NELAC-NY10854,NJDEP,PADEP	09/15/2016 08:12	09/16/2016 10:37	KH
129-00-0	Pyrene	ND		mg/kg dry	0.0557	0.111	2	EPA 8270D Certifications: CTDOH,NELAC-NY10854,NJDEP,PADEP	09/15/2016 08:12	09/16/2016 10:37	KH

	Surrogate Recoveries	Result	Acceptance Range
4165-60-0	*Surrogate: Nitrobenzene-d5*	*38.9 %*	*22-108*
321-60-8	*Surrogate: 2-Fluorobiphenyl*	*54.5 %*	*21-113*
1718-51-0	*Surrogate: Terphenyl-d14*	*42.2 %*	*24-116*

Polychlorinated Biphenyls (PCB)

Log-in Notes: VOA-CONT **Sample Notes:**

Sample Prepared by Method: EPA 3550C

CAS No.	Parameter	Result	Flag	Units	LOD/MDL	Reported to LOQ	Dilution	Reference Method	Date/Time Prepared	Date/Time Analyzed	Analyst
12674-11-2	Aroclor 1016	ND		mg/kg dry	0.0222	0.0222	1	EPA 8082A Certifications: NELAC-NY10854,CTDOH,NJDEP,PADEP	09/13/2016 09:10	09/13/2016 22:06	AMC
11104-28-2	Aroclor 1221	ND		mg/kg dry	0.0222	0.0222	1	EPA 8082A Certifications: NELAC-NY10854,CTDOH,NJDEP,PADEP	09/13/2016 09:10	09/13/2016 22:06	AMC
11141-16-5	Aroclor 1232	ND		mg/kg dry	0.0222	0.0222	1	EPA 8082A Certifications: NELAC-NY10854,CTDOH,NJDEP,PADEP	09/13/2016 09:10	09/13/2016 22:06	AMC
53469-21-9	Aroclor 1242	ND		mg/kg dry	0.0222	0.0222	1	EPA 8082A Certifications: NELAC-NY10854,CTDOH,NJDEP,PADEP	09/13/2016 09:10	09/13/2016 22:06	AMC
12672-29-6	Aroclor 1248	ND		mg/kg dry	0.0222	0.0222	1	EPA 8082A Certifications: NELAC-NY10854,CTDOH,NJDEP,PADEP	09/13/2016 09:10	09/13/2016 22:06	AMC
11097-69-1	Aroclor 1254	ND		mg/kg dry	0.0222	0.0222	1	EPA 8082A Certifications: NELAC-NY10854,CTDOH,NJDEP,PADEP	09/13/2016 09:10	09/13/2016 22:06	AMC
[illegible]-82-5	Aroclor 1260	ND		mg/kg dry	0.0222	0.0222	1	EPA 8082A Certifications: NELAC-NY10854,CTDOH,NJDEP,PADEP	09/13/2016 09:10	09/13/2016 22:06	AMC

Sample Information

Client Sample ID: SB-01-Comp | **York Sample ID:** 16I0323-02

York Project (SDG) No.	Client Project ID	Matrix	Collection Date/Time	Date Received
16I0323	BEGS or OEGS (15-008-0265)	Soil	September 7, 2016 10:15 am	09/09/2016

Polychlorinated Biphenyls (PCB)

Log-in Notes: VOA-CONT **Sample Notes:**

Sample Prepared by Method: EPA 3550C

CAS No.	Parameter	Result	Flag	Units	LOD/MDL	Reported to LOQ	Dilution	Reference Method	Date/Time Prepared	Date/Time Analyzed	Analyst
1336-36-3	* Total PCBs	ND		mg/kg dry	0.0222	0.0222	1	EPA 8082A Certifications:	09/13/2016 09:10	09/13/2016 22:06	AMC

	Surrogate Recoveries	Result	Acceptance Range
877-09-8	*Surrogate: Tetrachloro-m-xylene*	*57.0 %*	*30-140*
2051-24-3	*Surrogate: Decachlorobiphenyl*	*51.5 %*	*30-140*

Total Petroleum Hydrocarbons-DRO (C10-C28)

Log-in Notes: VOA-CONT **Sample Notes:**

Sample Prepared by Method: EPA 3550C

CAS No.	Parameter	Result	Flag	Units	LOD/MDL	Reported to LOQ	Dilution	Reference Method	Date/Time Prepared	Date/Time Analyzed	Analyst
	Total Petroleum Hydrocarbons-DRO	ND		mg/kg dry	4.53	13.3	1	EPA 8015D Certifications: NELAC-NY10854,NJDEP,PADEP	09/15/2016 07:34	09/15/2016 17:54	AMC

	Surrogate Recoveries	Result	Acceptance Range
638-68-6	*Surrogate: Triacontane*	*76.4 %*	*30-150*

Total Petroleum Hydrocarbons-GRO (C5-C10)

Log-in Notes: VOA-CONT **Sample Notes:**

Sample Prepared by Method: EPA 5035A

CAS No.	Parameter	Result	Flag	Units	LOD/MDL	Reported to LOQ	Dilution	Reference Method	Date/Time Prepared	Date/Time Analyzed	Analyst
	Total Petroleum Hydrocarbons-GRO	ND		mg/kg dry	53.3	107	100	EPA 8015D Certifications: NELAC-NY10854,NJDEP,PADEP	09/14/2016 08:58	09/14/2016 17:31	OW

	Surrogate Recoveries	Result	Acceptance Range
460-00-4	*Surrogate: p-Bromofluorobenzene*	*95.5 %*	*70-130*

Metals, TCLP RCRA

Log-in Notes: VOA-CONT **Sample Notes:**

Sample Prepared by Method: EPA 3015A/1311

CAS No.	Parameter	Result	Flag	Units	LOD/MDL	Reported to LOQ	Dilution	Reference Method	Date/Time Prepared	Date/Time Analyzed	Analyst
7440-38-2	Arsenic	ND		mg/L	0.004	0.004	1	EPA 6010C/1311 Certifications: CTDOH,NELAC-NY10854,NJDEP,PADEP	09/13/2016 12:22	09/14/2016 05:42	KV
7440-39-3	**Barium**	**0.301**		mg/L	0.011	0.011	1	EPA 6010C/1311 Certifications: CTDOH,NELAC-NY10854,NJDEP,PADEP	09/13/2016 12:22	09/14/2016 05:42	KV
7440-43-9	Cadmium	ND		mg/L	0.003	0.003	1	EPA 6010C/1311 Certifications: CTDOH,NELAC-NY10854,NJDEP,PADEP	09/13/2016 12:22	09/14/2016 05:42	KV
7440-47-3	Chromium	ND		mg/L	0.006	0.006	1	EPA 6010C/1311 Certifications: CTDOH,NELAC-NY10854,NJDEP,PADEP	09/13/2016 12:22	09/14/2016 05:42	KV
7439-92-1	**Lead**	**0.021**		mg/L	0.003	0.003	1	EPA 6010C/1311 Certifications: CTDOH,NELAC-NY10854,NJDEP,PADEP	09/13/2016 12:22	09/14/2016 05:42	KV
7782-49-2	**Selenium**	**0.025**	M-SeT C, B	mg/L	0.011	0.011	1	EPA 6010C/1311 Certifications: CTDOH,NELAC-NY10854,NJDEP,PADEP	09/13/2016 12:22	09/14/2016 05:42	KV
7440-22-4	Silver	ND		mg/L	0.006	0.006	1	EPA 6010C/1311 Certifications: CTDOH,NELAC-NY10854,NJDEP,PADEP	09/13/2016 12:22	09/14/2016 05:42	KV

Sample Information

Client Sample ID: SB-01-Comp

York Sample ID: 16I0323-02

York Project (SDG) No.	Client Project ID	Matrix	Collection Date/Time	Date Received
16I0323	BEGS or OEGS (15-008-0265)	Soil	September 7, 2016 10:15 am	09/09/2016

Mercury TCLP by 7473

Log-in Notes: VOA-CONT **Sample Notes:**

Sample Prepared by Method: EPA 7473 water

CAS No.	Parameter	Result	Flag	Units	LOD/MDL	Reported to LOQ	Dilution	Reference Method	Date/Time Prepared	Date/Time Analyzed	Analyst
7439-97-6	Mercury	ND		mg/L	0.0000390	0.000200	1	EPA 7473/1311	09/13/2016 12:33	09/14/2016 06:59	ALD
								Certifications: CTDOH,NJDEP,PADEP,NELAC-NY10854			

Ignitability

Log-in Notes: VOA-CONT **Sample Notes:**

Sample Prepared by Method: Analysis Preparation

CAS No.	Parameter	Result	Flag	Units	LOD/MDL	Reported to LOQ	Dilution	Reference Method	Date/Time Prepared	Date/Time Analyzed	Analyst
	* Ignitability	Non-Ignit.		-	1	1	1	EPA 1030P	09/13/2016 14:36	09/13/2016 14:58	AD
								Certifications: CTDOH,PADEP			

Total Solids

Log-in Notes: VOA-CONT **Sample Notes:**

Sample Prepared by Method: % Solids Prep

CAS No.	Parameter	Result	Flag	Units	LOD/MDL	Reported to LOQ	Dilution	Reference Method	Date/Time Prepared	Date/Time Analyzed	Analyst
solids	*** % Solids**	**75.1**		%	0.100	0.100	1	SM 2540G	09/15/2016 08:08	09/15/2016 14:32	LAB
								Certifications: CTDOH			

Corrosivity

Log-in Notes: VOA-CONT **Sample Notes:**

Sample Prepared by Method: Analysis Preparation

CAS No.	Parameter	Result	Flag	Units	LOD/MDL	Reported to LOQ	Dilution	Reference Method	Date/Time Prepared	Date/Time Analyzed	Analyst
	pH	**8.10**	HT-pH	pH units		0.500	1	EPA 9045D	09/13/2016 11:58	09/13/2016 14:32	LAB
								Certifications: NELAC-NY10854,CTDOH,PADEP			

Reactivity-Cyanide

Log-in Notes: VOA-CONT **Sample Notes:**

Sample Prepared by Method: Analysis Preparation

CAS No.	Parameter	Result	Flag	Units	LOD/MDL	Reported to LOQ	Dilution	Reference Method	Date/Time Prepared	Date/Time Analyzed	Analyst
	* Reactivity - Cyanide	ND		mg/kg	0.250	0.250	1	EPA SW-846 Ch.7.3.3	09/14/2016 10:46	09/14/2016 16:33	AD
								Certifications: CTDOH,PADEP			

Reactivity-Sulfide

Log-in Notes: VOA-CONT **Sample Notes:**

Sample Prepared by Method: Analysis Preparation

CAS No.	Parameter	Result	Flag	Units	LOD/MDL	Reported to LOQ	Dilution	Reference Method	Date/Time Prepared	Date/Time Analyzed	Analyst
	*** Reactivity - Sulfide**	**40.0**		mg/kg	15.0	15.0	1	EPA SW-846 Ch.7.3.4	09/14/2016 10:47	09/14/2016 16:30	AD
								Certifications: CTDOH,PADEP			

TCLP Extraction for METALS EPA 1311

Log-in Notes: VOA-CONT **Sample Notes:**

Sample Prepared by Method: EPA SW 846-1311 TCLP ext. for metals

CAS No.	Parameter	Result	Flag	Units	LOD/MDL	Reported to LOQ	Dilution	Reference Method	Date/Time Prepared	Date/Time Analyzed	Analyst
	TCLP Extraction	Completed		N/A	1.00	1.00	1	EPA 1311	09/12/2016 18:51	09/13/2016 14:06	TJM
								Certifications: NELAC-NY10854,CTDOH,NJDEP,PADEP			

Sample Information

Client Sample ID: SB-01-Comp **York Sample ID:** 16I0323-02

York Project (SDG) No.	Client Project ID	Matrix	Collection Date/Time	Date Received
16I0323	BEGS or OEGS (15-008-0265)	Soil	September 7, 2016 10:15 am	09/09/2016

Sample Information

Client Sample ID: SB-02-14.5-15.0' **York Sample ID:** 16I0323-03

York Project (SDG) No.	Client Project ID	Matrix	Collection Date/Time	Date Received
16I0323	BEGS or OEGS (15-008-0265)	Soil	September 7, 2016 10:45 am	09/09/2016

Volatile Organics, 8260 - Comprehensive **Log-in Notes:** VOA-CONT **Sample Notes:** VOA-CONT

Sample Prepared by Method: EPA 5035A

CAS No.	Parameter	Result	Flag	Units	Reported to LOD/MDL	LOQ	Dilution	Reference Method	Date/Time Prepared	Date/Time Analyzed	Analyst
630-20-6	1,1,1,2-Tetrachloroethane	ND		mg/kg dry	0.0027	0.0053	1	EPA 8260C Certifications: CTDOH,NELAC-NY10854,NJDEP	09/14/2016 18:55	09/15/2016 02:21	SS
71-55-6	1,1,1-Trichloroethane	ND		mg/kg dry	0.0027	0.0053	1	EPA 8260C Certifications: CTDOH,NELAC-NY10854,NJDEP,PADEP	09/14/2016 18:55	09/15/2016 02:21	SS
79-34-5	1,1,2,2-Tetrachloroethane	ND		mg/kg dry	0.0027	0.0053	1	EPA 8260C Certifications: CTDOH,NELAC-NY10854,NJDEP,PADEP	09/14/2016 18:55	09/15/2016 02:21	SS
76-13-1	1,1,2-Trichloro-1,2,2-trifluoroethane (Freon 113)	ND		mg/kg dry	0.0027	0.0053	1	EPA 8260C Certifications: CTDOH,NELAC-NY10854,NJDEP	09/14/2016 18:55	09/15/2016 02:21	SS
79-00-5	1,1,2-Trichloroethane	ND		mg/kg dry	0.0027	0.0053	1	EPA 8260C Certifications: CTDOH,NELAC-NY10854,NJDEP,PADEP	09/14/2016 18:55	09/15/2016 02:21	SS
75-34-3	1,1-Dichloroethane	ND		mg/kg dry	0.0027	0.0053	1	EPA 8260C Certifications: CTDOH,NELAC-NY10854,NJDEP,PADEP	09/14/2016 18:55	09/15/2016 02:21	SS
75-35-4	1,1-Dichloroethylene	ND		mg/kg dry	0.0027	0.0053	1	EPA 8260C Certifications: CTDOH,NELAC-NY10854,NJDEP,PADEP	09/14/2016 18:55	09/15/2016 02:21	SS
87-61-6	1,2,3-Trichlorobenzene	ND		mg/kg dry	0.0027	0.0053	1	EPA 8260C Certifications: NELAC-NY10854,NJDEP	09/14/2016 18:55	09/15/2016 02:21	SS
96-18-4	1,2,3-Trichloropropane	ND		mg/kg dry	0.0027	0.0053	1	EPA 8260C Certifications: NELAC-NY10854,NJDEP	09/14/2016 18:55	09/15/2016 02:21	SS
120-82-1	1,2,4-Trichlorobenzene	ND		mg/kg dry	0.0027	0.0053	1	EPA 8260C Certifications: NELAC-NY10854,NJDEP	09/14/2016 18:55	09/15/2016 02:21	SS
95-63-6	1,2,4-Trimethylbenzene	ND		mg/kg dry	0.0027	0.0053	1	EPA 8260C Certifications: CTDOH,NELAC-NY10854,NJDEP	09/14/2016 18:55	09/15/2016 02:21	SS
96-12-8	1,2-Dibromo-3-chloropropane	ND		mg/kg dry	0.0027	0.0053	1	EPA 8260C Certifications: CTDOH,NELAC-NY10854,NJDEP	09/14/2016 18:55	09/15/2016 02:21	SS
106-93-4	1,2-Dibromoethane	ND		mg/kg dry	0.0027	0.0053	1	EPA 8260C Certifications: CTDOH,NELAC-NY10854,NJDEP	09/14/2016 18:55	09/15/2016 02:21	SS
95-50-1	1,2-Dichlorobenzene	ND		mg/kg dry	0.0027	0.0053	1	EPA 8260C Certifications: CTDOH,NELAC-NY10854,NJDEP,PADEP	09/14/2016 18:55	09/15/2016 02:21	SS
107-06-2	1,2-Dichloroethane	ND		mg/kg dry	0.0027	0.0053	1	EPA 8260C Certifications: CTDOH,NELAC-NY10854,NJDEP,PADEP	09/14/2016 18:55	09/15/2016 02:21	SS
78-87-5	1,2-Dichloropropane	ND		mg/kg dry	0.0027	0.0053	1	EPA 8260C Certifications: CTDOH,NELAC-NY10854,NJDEP	09/14/2016 18:55	09/15/2016 02:21	SS
108-67-8	1,3,5-Trimethylbenzene	ND		mg/kg dry	0.0027	0.0053	1	EPA 8260C Certifications: CTDOH,NELAC-NY10854,NJDEP	09/14/2016 18:55	09/15/2016 02:21	SS

Sample Information

Client Sample ID: SB-02-14.5-15.0' **York Sample ID:** 16I0323-03

York Project (SDG) No.	Client Project ID	Matrix	Collection Date/Time	Date Received
16I0323	BEGS or OEGS (15-008-0265)	Soil	September 7, 2016 10:45 am	09/09/2016

Volatile Organics, 8260 - Comprehensive

Log-in Notes: VOA-CONT **Sample Notes:** VOA-CONT

Sample Prepared by Method: EPA 5035A

CAS No.	Parameter	Result	Flag	Units	Reported to LOD/MDL	LOQ	Dilution	Reference Method	Date/Time Prepared	Date/Time Analyzed	Analyst
541-73-1	1,3-Dichlorobenzene	ND		mg/kg dry	0.0027	0.0053	1	EPA 8260C Certifications: CTDOH,NELAC-NY10854,NJDEP,PADEP	09/14/2016 18:55	09/15/2016 02:21	SS
106-46-7	1,4-Dichlorobenzene	ND		mg/kg dry	0.0027	0.0053	1	EPA 8260C Certifications: CTDOH,NELAC-NY10854,NJDEP,PADEP	09/14/2016 18:55	09/15/2016 02:21	SS
123-91-1	1,4-Dioxane	ND		mg/kg dry	0.053	0.11	1	EPA 8260C Certifications: NELAC-NY10854,NJDEP	09/14/2016 18:55	09/15/2016 02:21	SS
78-93-3	2-Butanone	ND		mg/kg dry	0.0027	0.0053	1	EPA 8260C Certifications: CTDOH,NELAC-NY10854,NJDEP	09/14/2016 18:55	09/15/2016 02:21	SS
591-78-6	2-Hexanone	ND		mg/kg dry	0.0027	0.0053	1	EPA 8260C Certifications: CTDOH,NELAC-NY10854,NJDEP	09/14/2016 18:55	09/15/2016 02:21	SS
108-10-1	4-Methyl-2-pentanone	ND		mg/kg dry	0.0027	0.0053	1	EPA 8260C Certifications: CTDOH,NELAC-NY10854,NJDEP	09/14/2016 18:55	09/15/2016 02:21	SS
67-64-1	Acetone	ND		mg/kg dry	0.0053	0.011	1	EPA 8260C Certifications: CTDOH,NELAC-NY10854,NJDEP	09/14/2016 18:55	09/15/2016 02:21	SS
[illegible]2-8	Acrolein	ND		mg/kg dry	0.0053	0.011	1	EPA 8260C Certifications: CTDOH,NELAC-NY10854,NJDEP	09/14/2016 18:55	09/15/2016 02:21	SS
107-13-1	Acrylonitrile	ND		mg/kg dry	0.0027	0.0053	1	EPA 8260C Certifications: CTDOH,NELAC-NY10854,NJDEP	09/14/2016 18:55	09/15/2016 02:21	SS
71-43-2	Benzene	ND		mg/kg dry	0.0027	0.0053	1	EPA 8260C Certifications: CTDOH,NELAC-NY10854,NJDEP,PADEP	09/14/2016 18:55	09/15/2016 02:21	SS
74-97-5	Bromochloromethane	ND		mg/kg dry	0.0027	0.0053	1	EPA 8260C Certifications: NELAC-NY10854,NJDEP	09/14/2016 18:55	09/15/2016 02:21	SS
75-27-4	Bromodichloromethane	ND		mg/kg dry	0.0027	0.0053	1	EPA 8260C Certifications: CTDOH,NELAC-NY10854,NJDEP,PADEP	09/14/2016 18:55	09/15/2016 02:21	SS
75-25-2	Bromoform	ND		mg/kg dry	0.0027	0.0053	1	EPA 8260C Certifications: CTDOH,NELAC-NY10854,NJDEP,PADEP	09/14/2016 18:55	09/15/2016 02:21	SS
74-83-9	Bromomethane	ND		mg/kg dry	0.0027	0.0053	1	EPA 8260C Certifications: CTDOH,NELAC-NY10854,NJDEP,PADEP	09/14/2016 18:55	09/15/2016 02:21	SS
75-15-0	Carbon disulfide	ND		mg/kg dry	0.0027	0.0053	1	EPA 8260C Certifications: CTDOH,NELAC-NY10854,NJDEP	09/14/2016 18:55	09/15/2016 02:21	SS
56-23-5	Carbon tetrachloride	ND		mg/kg dry	0.0027	0.0053	1	EPA 8260C Certifications: CTDOH,NELAC-NY10854,NJDEP,PADEP	09/14/2016 18:55	09/15/2016 02:21	SS
108-90-7	Chlorobenzene	ND		mg/kg dry	0.0027	0.0053	1	EPA 8260C Certifications: CTDOH,NELAC-NY10854,NJDEP,PADEP	09/14/2016 18:55	09/15/2016 02:21	SS
75-00-3	Chloroethane	ND		mg/kg dry	0.0027	0.0053	1	EPA 8260C Certifications: CTDOH,NELAC-NY10854,NJDEP,PADEP	09/14/2016 18:55	09/15/2016 02:21	SS
67-66-3	Chloroform	ND		mg/kg dry	0.0027	0.0053	1	EPA 8260C Certifications: CTDOH,NELAC-NY10854,NJDEP,PADEP	09/14/2016 18:55	09/15/2016 02:21	SS
74-87-3	Chloromethane	ND		mg/kg dry	0.0027	0.0053	1	EPA 8260C Certifications: CTDOH,NELAC-NY10854,NJDEP,PADEP	09/14/2016 18:55	09/15/2016 02:21	SS
156-59-2	cis-1,2-Dichloroethylene	ND		mg/kg dry	0.0027	0.0053	1	EPA 8260C Certifications: CTDOH,NELAC-NY10854,NJDEP	09/14/2016 18:55	09/15/2016 02:21	SS
[illegible]01-5	cis-1,3-Dichloropropylene	ND		mg/kg dry	0.0027	0.0053	1	EPA 8260C Certifications: CTDOH,NELAC-NY10854,NJDEP,PADEP	09/14/2016 18:55	09/15/2016 02:21	SS

Sample Information

Client Sample ID: SB-02-14.5-15.0' **York Sample ID:** 16I0323-03

York Project (SDG) No.	Client Project ID	Matrix	Collection Date/Time	Date Received
16I0323	BEGS or OEGS (15-008-0265)	Soil	September 7, 2016 10:45 am	09/09/2016

Volatile Organics, 8260 - Comprehensive

Log-in Notes: VOA-CONT **Sample Notes:** VOA-CONT

Sample Prepared by Method: EPA 5035A

CAS No.	Parameter	Result	Flag	Units	Reported to LOD/MDL	LOQ	Dilution	Reference Method	Date/Time Prepared	Date/Time Analyzed	Analyst
110-82-7	Cyclohexane	ND		mg/kg dry	0.0027	0.0053	1	EPA 8260C Certifications: NELAC-NY10854,NJDEP	09/14/2016 18:55	09/15/2016 02:21	SS
124-48-1	Dibromochloromethane	ND		mg/kg dry	0.0027	0.0053	1	EPA 8260C Certifications: NELAC-NY10854,NJDEP,PADEP	09/14/2016 18:55	09/15/2016 02:21	SS
74-95-3	Dibromomethane	ND		mg/kg dry	0.0027	0.0053	1	EPA 8260C Certifications: NELAC-NY10854,NJDEP	09/14/2016 18:55	09/15/2016 02:21	SS
75-71-8	Dichlorodifluoromethane	ND		mg/kg dry	0.0027	0.0053	1	EPA 8260C Certifications: NELAC-NY10854,NJDEP	09/14/2016 18:55	09/15/2016 02:21	SS
100-41-4	Ethyl Benzene	ND		mg/kg dry	0.0027	0.0053	1	EPA 8260C Certifications: CTDOH,NELAC-NY10854,NJDEP,PADEP	09/14/2016 18:55	09/15/2016 02:21	SS
87-68-3	Hexachlorobutadiene	ND		mg/kg dry	0.0027	0.0053	1	EPA 8260C Certifications: NELAC-NY10854,NJDEP	09/14/2016 18:55	09/15/2016 02:21	SS
98-82-8	Isopropylbenzene	ND		mg/kg dry	0.0027	0.0053	1	EPA 8260C Certifications: CTDOH,NELAC-NY10854,NJDEP	09/14/2016 18:55	09/15/2016 02:21	SS
79-20-9	Methyl acetate	ND		mg/kg dry	0.0027	0.0053	1	EPA 8260C Certifications: NELAC-NY10854,NJDEP	09/14/2016 18:55	09/15/2016 02:21	SS
1634-04-4	Methyl tert-butyl ether (MTBE)	ND		mg/kg dry	0.0027	0.0053	1	EPA 8260C Certifications: CTDOH,NELAC-NY10854,NJDEP	09/14/2016 18:55	09/15/2016 02:21	SS
108-87-2	Methylcyclohexane	ND		mg/kg dry	0.0027	0.0053	1	EPA 8260C Certifications: NELAC-NY10854,NJDEP	09/14/2016 18:55	09/15/2016 02:21	SS
75-09-2	Methylene chloride	ND		mg/kg dry	0.0053	0.011	1	EPA 8260C Certifications: CTDOH,NELAC-NY10854,NJDEP,PADEP	09/14/2016 18:55	09/15/2016 02:21	SS
104-51-8	n-Butylbenzene	ND		mg/kg dry	0.0027	0.0053	1	EPA 8260C Certifications: CTDOH,NELAC-NY10854,NJDEP	09/14/2016 18:55	09/15/2016 02:21	SS
103-65-1	n-Propylbenzene	ND		mg/kg dry	0.0027	0.0053	1	EPA 8260C Certifications: CTDOH,NELAC-NY10854,NJDEP	09/14/2016 18:55	09/15/2016 02:21	SS
95-47-6	o-Xylene	ND		mg/kg dry	0.0027	0.0053	1	EPA 8260C Certifications: CTDOH,NELAC-NY10854	09/14/2016 18:55	09/15/2016 02:21	SS
179601-23-1	p- & m- Xylenes	ND		mg/kg dry	0.0053	0.011	1	EPA 8260C Certifications: CTDOH,NELAC-NY10854	09/14/2016 18:55	09/15/2016 02:21	SS
99-87-6	p-Isopropyltoluene	ND		mg/kg dry	0.0027	0.0053	1	EPA 8260C Certifications: CTDOH,NELAC-NY10854,NJDEP	09/14/2016 18:55	09/15/2016 02:21	SS
135-98-8	sec-Butylbenzene	ND		mg/kg dry	0.0027	0.0053	1	EPA 8260C Certifications: CTDOH,NELAC-NY10854,NJDEP	09/14/2016 18:55	09/15/2016 02:21	SS
100-42-5	Styrene	ND		mg/kg dry	0.0027	0.0053	1	EPA 8260C Certifications: CTDOH,NELAC-NY10854,NJDEP	09/14/2016 18:55	09/15/2016 02:21	SS
75-65-0	tert-Butyl alcohol (TBA)	ND		mg/kg dry	0.0027	0.0053	1	EPA 8260C Certifications: NELAC-NY10854,NJDEP	09/14/2016 18:55	09/15/2016 02:21	SS
98-06-6	tert-Butylbenzene	ND		mg/kg dry	0.0027	0.0053	1	EPA 8260C Certifications: CTDOH,NELAC-NY10854,NJDEP	09/14/2016 18:55	09/15/2016 02:21	SS
127-18-4	Tetrachloroethylene	ND		mg/kg dry	0.0027	0.0053	1	EPA 8260C Certifications: CTDOH,NELAC-NY10854,NJDEP,PADEP	09/14/2016 18:55	09/15/2016 02:21	SS
108-88-3	Toluene	ND		mg/kg dry	0.0027	0.0053	1	EPA 8260C Certifications: CTDOH,NELAC-NY10854,NJDEP,PADEP	09/14/2016 18:55	09/15/2016 02:21	SS

Sample Information

Client Sample ID: SB-02-14.5-15.0' **York Sample ID:** 16I0323-03

York Project (SDG) No.	Client Project ID	Matrix	Collection Date/Time	Date Received
16I0323	BEGS or OEGS (15-008-0265)	Soil	September 7, 2016 10:45 am	09/09/2016

Volatile Organics, 8260 - Comprehensive

Log-in Notes: VOA-CONT **Sample Notes:** VOA-CONT

Sample Prepared by Method: EPA 5035A

CAS No.	Parameter	Result	Flag	Units	Reported to LOD/MDL	LOQ	Dilution	Reference Method	Date/Time Prepared	Date/Time Analyzed	Analyst
156-60-5	trans-1,2-Dichloroethylene	ND		mg/kg dry	0.0027	0.0053	1	EPA 8260C	09/14/2016 18:55	09/15/2016 02:21	SS
								Certifications: CTDOH,NELAC-NY10854,NJDEP			
10061-02-6	trans-1,3-Dichloropropylene	ND		mg/kg dry	0.0027	0.0053	1	EPA 8260C	09/14/2016 18:55	09/15/2016 02:21	SS
								Certifications: CTDOH,NELAC-NY10854,NJDEP,PADEP			
79-01-6	Trichloroethylene	ND		mg/kg dry	0.0027	0.0053	1	EPA 8260C	09/14/2016 18:55	09/15/2016 02:21	SS
								Certifications: CTDOH,NELAC-NY10854,NJDEP,PADEP			
75-69-4	Trichlorofluoromethane	ND		mg/kg dry	0.0027	0.0053	1	EPA 8260C	09/14/2016 18:55	09/15/2016 02:21	SS
								Certifications: CTDOH,NELAC-NY10854,NJDEP,PADEP			
75-01-4	Vinyl Chloride	ND		mg/kg dry	0.0027	0.0053	1	EPA 8260C	09/14/2016 18:55	09/15/2016 02:21	SS
								Certifications: CTDOH,NELAC-NY10854,NJDEP,PADEP			
1330-20-7	Xylenes, Total	ND		mg/kg dry	0.0080	0.016	1	EPA 8260C	09/14/2016 18:55	09/15/2016 02:21	SS
								Certifications: CTDOH,NELAC-NY10854,NJDEP,PADEP			

	Surrogate Recoveries	Result	Acceptance Range
[illegible]60-07-0	*Surrogate: 1,2-Dichloroethane-d4*	*92.4 %*	*77-125*
[illegible]26-5	*Surrogate: Toluene-d8*	*99.6 %*	*85-120*
460-00-4	*Surrogate: p-Bromofluorobenzene*	*96.6 %*	*76-130*

Total Solids

Log-in Notes: VOA-CONT **Sample Notes:**

Sample Prepared by Method: % Solids Prep

CAS No.	Parameter	Result	Flag	Units	LOD/MDL	Reported to LOQ	Dilution	Reference Method	Date/Time Prepared	Date/Time Analyzed	Analyst
solids	*** % Solids**	**93.7**		%	0.100	0.100	1	SM 2540G	09/15/2016 08:08	09/15/2016 14:32	LAB
								Certifications: CTDOH			

Sample Information

Client Sample ID: SB-02-Comp **York Sample ID:** 16I0323-04

York Project (SDG) No.	Client Project ID	Matrix	Collection Date/Time	Date Received
16I0323	BEGS or OEGS (15-008-0265)	Soil	September 7, 2016 10:50 am	09/09/2016

Semi-Volatiles, PAH Target List

Log-in Notes: VOA-CONT **Sample Notes:**

Sample Prepared by Method: EPA 3550C

CAS No.	Parameter	Result	Flag	Units	Reported to LOD/MDL	LOQ	Dilution	Reference Method	Date/Time Prepared	Date/Time Analyzed	Analyst
91-57-6	2-Methylnaphthalene	ND		mg/kg dry	0.0446	0.0890	2	EPA 8270D	09/15/2016 08:12	09/16/2016 11:09	KH
								Certifications: CTDOH,NELAC-NY10854,NJDEP,PADEP			
83-32-9	Acenaphthene	ND		mg/kg dry	0.0446	0.0890	2	EPA 8270D	09/15/2016 08:12	09/16/2016 11:09	KH
								Certifications: CTDOH,NELAC-NY10854,NJDEP,PADEP			
[illegible]96-8	Acenaphthylene	ND		mg/kg dry	0.0446	0.0890	2	EPA 8270D	09/15/2016 08:12	09/16/2016 11:09	KH
								Certifications: CTDOH,NELAC-NY10854,NJDEP,PADEP			

Sample Information

Client Sample ID: SB-02-Comp

York Sample ID: 16I0323-04

York Project (SDG) No.	Client Project ID	Matrix	Collection Date/Time	Date Received
16I0323	BEGS or OEGS (15-008-0265)	Soil	September 7, 2016 10:50 am	09/09/2016

Semi-Volatiles, PAH Target List

Log-in Notes: VOA-CONT **Sample Notes:**

Sample Prepared by Method: EPA 3550C

CAS No.	Parameter	Result	Flag	Units	Reported to LOD/MDL	LOQ	Dilution	Reference Method	Date/Time Prepared	Date/Time Analyzed	Analyst
120-12-7	Anthracene	ND		mg/kg dry	0.0446	0.0890	2	EPA 8270D Certifications: CTDOH,NELAC-NY10854,NJDEP,PADEP	09/15/2016 08:12	09/16/2016 11:09	KH
56-55-3	**Benzo(a)anthracene**	**0.0562**	J	mg/kg dry	0.0446	0.0890	2	EPA 8270D Certifications: CTDOH,NELAC-NY10854,NJDEP,PADEP	09/15/2016 08:12	09/16/2016 11:09	KH
50-32-8	Benzo(a)pyrene	ND		mg/kg dry	0.0446	0.0890	2	EPA 8270D Certifications: CTDOH,NELAC-NY10854,NJDEP,PADEP	09/15/2016 08:12	09/16/2016 11:09	KH
205-99-2	Benzo(b)fluoranthene	ND		mg/kg dry	0.0446	0.0890	2	EPA 8270D Certifications: CTDOH,NELAC-NY10854,NJDEP,PADEP	09/15/2016 08:12	09/16/2016 11:09	KH
191-24-2	Benzo(g,h,i)perylene	ND		mg/kg dry	0.0446	0.0890	2	EPA 8270D Certifications: CTDOH,NELAC-NY10854,NJDEP,PADEP	09/15/2016 08:12	09/16/2016 11:09	KH
207-08-9	Benzo(k)fluoranthene	ND		mg/kg dry	0.0446	0.0890	2	EPA 8270D Certifications: CTDOH,NELAC-NY10854,NJDEP,PADEP	09/15/2016 08:12	09/16/2016 11:09	KH
218-01-9	**Chrysene**	**0.0590**	J	mg/kg dry	0.0446	0.0890	2	EPA 8270D Certifications: CTDOH,NELAC-NY10854,NJDEP,PADEP	09/15/2016 08:12	09/16/2016 11:09	KH
53-70-3	Dibenzo(a,h)anthracene	ND		mg/kg dry	0.0446	0.0890	2	EPA 8270D Certifications: CTDOH,NELAC-NY10854,NJDEP,PADEP	09/15/2016 08:12	09/16/2016 11:09	KH
206-44-0	**Fluoranthene**	**0.106**		mg/kg dry	0.0446	0.0890	2	EPA 8270D Certifications: CTDOH,NELAC-NY10854,NJDEP,PADEP	09/15/2016 08:12	09/16/2016 11:09	KH
86-73-7	Fluorene	ND		mg/kg dry	0.0446	0.0890	2	EPA 8270D Certifications: NELAC-NY10854,NJDEP,PADEP	09/15/2016 08:12	09/16/2016 11:09	KH
193-39-5	Indeno(1,2,3-cd)pyrene	ND		mg/kg dry	0.0446	0.0890	2	EPA 8270D Certifications: CTDOH,NELAC-NY10854,NJDEP,PADEP	09/15/2016 08:12	09/16/2016 11:09	KH
91-20-3	Naphthalene	ND		mg/kg dry	0.0446	0.0890	2	EPA 8270D Certifications: CTDOH,NELAC-NY10854,NJDEP,PADEP	09/15/2016 08:12	09/16/2016 11:09	KH
85-01-8	**Phenanthrene**	**0.0647**	J	mg/kg dry	0.0446	0.0890	2	EPA 8270D Certifications: CTDOH,NELAC-NY10854,NJDEP,PADEP	09/15/2016 08:12	09/16/2016 11:09	KH
129-00-0	**Pyrene**	**0.117**		mg/kg dry	0.0446	0.0890	2	EPA 8270D Certifications: CTDOH,NELAC-NY10854,NJDEP,PADEP	09/15/2016 08:12	09/16/2016 11:09	KH

	Surrogate Recoveries	Result	Acceptance Range
4165-60-0	*Surrogate: Nitrobenzene-d5*	*48.2 %*	*22-108*
321-60-8	*Surrogate: 2-Fluorobiphenyl*	*63.6 %*	*21-113*
1718-51-0	*Surrogate: Terphenyl-d14*	*46.5 %*	*24-116*

Polychlorinated Biphenyls (PCB)

Log-in Notes: VOA-CONT **Sample Notes:**

Sample Prepared by Method: EPA 3550C

CAS No.	Parameter	Result	Flag	Units	LOD/MDL	Reported to LOQ	Dilution	Reference Method	Date/Time Prepared	Date/Time Analyzed	Analyst
12674-11-2	Aroclor 1016	ND		mg/kg dry	0.0178	0.0178	1	EPA 8082A Certifications: NELAC-NY10854,CTDOH,NJDEP,PADEP	09/13/2016 09:10	09/13/2016 22:35	AMC
11104-28-2	Aroclor 1221	ND		mg/kg dry	0.0178	0.0178	1	EPA 8082A Certifications: NELAC-NY10854,CTDOH,NJDEP,PADEP	09/13/2016 09:10	09/13/2016 22:35	AMC
11141-16-5	Aroclor 1232	ND		mg/kg dry	0.0178	0.0178	1	EPA 8082A Certifications: NELAC-NY10854,CTDOH,NJDEP,PADEP	09/13/2016 09:10	09/13/2016 22:35	AMC

Sample Information

Client Sample ID: SB-02-Comp | **York Sample ID:** 16I0323-04

York Project (SDG) No.	Client Project ID	Matrix	Collection Date/Time	Date Received
16I0323	BEGS or OEGS (15-008-0265)	Soil	September 7, 2016 10:50 am	09/09/2016

Polychlorinated Biphenyls (PCB)

Log-in Notes: VOA-CONT **Sample Notes:**

Sample Prepared by Method: EPA 3550C

CAS No.	Parameter	Result	Flag	Units	LOD/MDL	Reported to LOQ	Dilution	Reference Method	Date/Time Prepared	Date/Time Analyzed	Analyst
53469-21-9	Aroclor 1242	ND		mg/kg dry	0.0178	0.0178	1	EPA 8082A Certifications: NELAC-NY10854,CTDOH,NJDEP,PADEP	09/13/2016 09:10	09/13/2016 22:35	AMC
12672-29-6	Aroclor 1248	ND		mg/kg dry	0.0178	0.0178	1	EPA 8082A Certifications: NELAC-NY10854,CTDOH,NJDEP,PADEP	09/13/2016 09:10	09/13/2016 22:35	AMC
11097-69-1	Aroclor 1254	ND		mg/kg dry	0.0178	0.0178	1	EPA 8082A Certifications: NELAC-NY10854,CTDOH,NJDEP,PADEP	09/13/2016 09:10	09/13/2016 22:35	AMC
11096-82-5	Aroclor 1260	ND		mg/kg dry	0.0178	0.0178	1	EPA 8082A Certifications: NELAC-NY10854,CTDOH,NJDEP,PADEP	09/13/2016 09:10	09/13/2016 22:35	AMC
1336-36-3	* Total PCBs	ND		mg/kg dry	0.0178	0.0178	1	EPA 8082A Certifications:	09/13/2016 09:10	09/13/2016 22:35	AMC

	Surrogate Recoveries	Result	Acceptance Range
877-09-8	*Surrogate: Tetrachloro-m-xylene*	*39.5 %*	*30-140*
2051-24-3	*Surrogate: Decachlorobiphenyl*	*41.0 %*	*30-140*

Total Petroleum Hydrocarbons-DRO (C10-C28)

Log-in Notes: VOA-CONT **Sample Notes:**

Sample Prepared by Method: EPA 3550C

CAS No.	Parameter	Result	Flag	Units	LOD/MDL	Reported to LOQ	Dilution	Reference Method	Date/Time Prepared	Date/Time Analyzed	Analyst
	Total Petroleum Hydrocarbons-DRO	**14.4**		mg/kg dry	3.63	10.7	1	EPA 8015D Certifications: NELAC-NY10854,NJDEP,PADEP	09/15/2016 07:34	09/15/2016 18:54	AMC

	Surrogate Recoveries	Result	Acceptance Range
638-68-6	*Surrogate: Triacontane*	*77.1 %*	*30-150*

Total Petroleum Hydrocarbons-GRO (C5-C10)

Log-in Notes: VOA-CONT **Sample Notes:**

Sample Prepared by Method: EPA 5035A

CAS No.	Parameter	Result	Flag	Units	LOD/MDL	Reported to LOQ	Dilution	Reference Method	Date/Time Prepared	Date/Time Analyzed	Analyst
	Total Petroleum Hydrocarbons-GRO	ND		mg/kg dry	42.7	85.4	100	EPA 8015D Certifications: NELAC-NY10854,NJDEP,PADEP	09/14/2016 08:58	09/14/2016 18:09	OW

	Surrogate Recoveries	Result	Acceptance Range
460-00-4	*Surrogate: p-Bromofluorobenzene*	*91.9 %*	*70-130*

Metals, TCLP RCRA

Log-in Notes: VOA-CONT **Sample Notes:**

Sample Prepared by Method: EPA 3015A/1311

CAS No.	Parameter	Result	Flag	Units	LOD/MDL	Reported to LOQ	Dilution	Reference Method	Date/Time Prepared	Date/Time Analyzed	Analyst
7440-38-2	Arsenic	ND		mg/L	0.004	0.004	1	EPA 6010C/1311 Certifications: CTDOH,NELAC-NY10854,NJDEP,PADEP	09/13/2016 12:22	09/14/2016 05:47	KV
7440-39-3	**Barium**	**0.537**		mg/L	0.011	0.011	1	EPA 6010C/1311 Certifications: CTDOH,NELAC-NY10854,NJDEP,PADEP	09/13/2016 12:22	09/14/2016 05:47	KV
[illegible]3-9	Cadmium	ND		mg/L	0.003	0.003	1	EPA 6010C/1311 Certifications: CTDOH,NELAC-NY10854,NJDEP,PADEP	09/13/2016 12:22	09/14/2016 05:47	KV

Sample Information

Client Sample ID: SB-02-Comp | **York Sample ID:** 16I0323-04

York Project (SDG) No.	Client Project ID	Matrix	Collection Date/Time	Date Received
16I0323	BEGS or OEGS (15-008-0265)	Soil	September 7, 2016 10:50 am	09/09/2016

Metals, TCLP RCRA

Log-in Notes: VOA-CONT **Sample Notes:**

Sample Prepared by Method: EPA 3015A/1311

CAS No.	Parameter	Result	Flag	Units	LOD/MDL	Reported to LOQ	Dilution	Reference Method	Date/Time Prepared	Date/Time Analyzed	Analyst
7440-47-3	Chromium	ND		mg/L	0.006	0.006	1	EPA 6010C/1311	09/13/2016 12:22	09/14/2016 05:47	KV
								Certifications: CTDOH,NELAC-NY10854,NJDEP,PADEP			
7439-92-1	**Lead**	**0.017**		mg/L	0.003	0.003	1	EPA 6010C/1311	09/13/2016 12:22	09/14/2016 05:47	KV
								Certifications: CTDOH,NELAC-NY10854,NJDEP,PADEP			
7782-49-2	**Selenium**	**0.016**	M-SeT C, B	mg/L	0.011	0.011	1	EPA 6010C/1311	09/13/2016 12:22	09/14/2016 05:47	KV
								Certifications: CTDOH,NELAC-NY10854,NJDEP,PADEP			
7440-22-4	Silver	ND		mg/L	0.006	0.006	1	EPA 6010C/1311	09/13/2016 12:22	09/14/2016 05:47	KV
								Certifications: CTDOH,NELAC-NY10854,NJDEP,PADEP			

Mercury TCLP by 7473

Log-in Notes: VOA-CONT **Sample Notes:**

Sample Prepared by Method: EPA 7473 water

CAS No.	Parameter	Result	Flag	Units	LOD/MDL	Reported to LOQ	Dilution	Reference Method	Date/Time Prepared	Date/Time Analyzed	Analyst
7439-97-6	Mercury	ND		mg/L	0.0000390	0.000200	1	EPA 7473/1311	09/13/2016 12:33	09/14/2016 06:59	ALD
								Certifications: CTDOH,NJDEP,PADEP,NELAC-NY10854			

Ignitability

Log-in Notes: VOA-CONT **Sample Notes:**

Sample Prepared by Method: Analysis Preparation

CAS No.	Parameter	Result	Flag	Units	LOD/MDL	Reported to LOQ	Dilution	Reference Method	Date/Time Prepared	Date/Time Analyzed	Analyst
	* Ignitability	Non-Ignit.		-	1	1	1	EPA 1030P	09/13/2016 14:36	09/13/2016 14:58	AD
								Certifications: CTDOH,PADEP			

Total Solids

Log-in Notes: VOA-CONT **Sample Notes:**

Sample Prepared by Method: % Solids Prep

CAS No.	Parameter	Result	Flag	Units	LOD/MDL	Reported to LOQ	Dilution	Reference Method	Date/Time Prepared	Date/Time Analyzed	Analyst
solids	*** % Solids**	**93.7**		%	0.100	0.100	1	SM 2540G	09/15/2016 08:08	09/15/2016 14:32	LAB
								Certifications: CTDOH			

Corrosivity

Log-in Notes: VOA-CONT **Sample Notes:**

Sample Prepared by Method: Analysis Preparation

CAS No.	Parameter	Result	Flag	Units	LOD/MDL	Reported to LOQ	Dilution	Reference Method	Date/Time Prepared	Date/Time Analyzed	Analyst
	pH	**9.89**	HT-pH	pH units		0.500	1	EPA 9045D	09/13/2016 11:58	09/13/2016 14:32	LAB
								Certifications: NELAC-NY10854,CTDOH,PADEP			

Reactivity-Cyanide

Log-in Notes: VOA-CONT **Sample Notes:**

Sample Prepared by Method: Analysis Preparation

CAS No.	Parameter	Result	Flag	Units	LOD/MDL	Reported to LOQ	Dilution	Reference Method	Date/Time Prepared	Date/Time Analyzed	Analyst
	* Reactivity - Cyanide	ND		mg/kg	0.250	0.250	1	EPA SW-846 Ch.7.3.3	09/14/2016 10:46	09/14/2016 16:33	AD
								Certifications: CTDOH,PADEP			

Sample Information

Client Sample ID: SB-02-Comp | **York Sample ID:** 16I0323-04

York Project (SDG) No.	Client Project ID	Matrix	Collection Date/Time	Date Received
16I0323	BEGS or OEGS (15-008-0265)	Soil	September 7, 2016 10:50 am	09/09/2016

Reactivity-Sulfide

Log-in Notes: VOA-CONT **Sample Notes:**

Sample Prepared by Method: Analysis Preparation

CAS No.	Parameter	Result	Flag	Units	LOD/MDL	Reported to LOQ	Dilution	Reference Method	Date/Time Prepared	Date/Time Analyzed	Analyst
	* Reactivity - Sulfide	40.0		mg/kg	15.0	15.0	1	EPA SW-846 Ch.7.3.4	09/14/2016 10:47	09/14/2016 16:30	AD
								Certifications: CTDOH,PADEP			

TCLP Extraction for METALS EPA 1311

Log-in Notes: VOA-CONT **Sample Notes:**

Sample Prepared by Method: EPA SW 846-1311 TCLP ext. for metals

CAS No.	Parameter	Result	Flag	Units	LOD/MDL	Reported to LOQ	Dilution	Reference Method	Date/Time Prepared	Date/Time Analyzed	Analyst
	TCLP Extraction	Completed		N/A	1.00	1.00	1	EPA 1311	09/12/2016 18:51	09/13/2016 14:06	TJM
								Certifications: NELAC-NY10854,CTDOH,NJDEP,PADEP			

Sample Information

Client Sample ID: SB-04-14.5-15.0' | **York Sample ID:** 16I0323-05

York Project (SDG) No.	Client Project ID	Matrix	Collection Date/Time	Date Received
16I0323	BEGS or OEGS (15-008-0265)	Soil	September 7, 2016 1:30 pm	09/09/2016

Volatile Organics, 8260 - Comprehensive

Log-in Notes: VOA-CONT **Sample Notes:** VOA-CONT

Sample Prepared by Method: EPA 5035A

CAS No.	Parameter	Result	Flag	Units	Reported to LOD/MDL	LOQ	Dilution	Reference Method	Date/Time Prepared	Date/Time Analyzed	Analyst
630-20-6	1,1,1,2-Tetrachloroethane	ND		mg/kg dry	0.0030	0.0060	1	EPA 8260C	09/14/2016 18:55	09/15/2016 02:55	SS
								Certifications: CTDOH,NELAC-NY10854,NJDEP			
71-55-6	1,1,1-Trichloroethane	ND		mg/kg dry	0.0030	0.0060	1	EPA 8260C	09/14/2016 18:55	09/15/2016 02:55	SS
								Certifications: CTDOH,NELAC-NY10854,NJDEP,PADEP			
79-34-5	1,1,2,2-Tetrachloroethane	ND		mg/kg dry	0.0030	0.0060	1	EPA 8260C	09/14/2016 18:55	09/15/2016 02:55	SS
								Certifications: CTDOH,NELAC-NY10854,NJDEP,PADEP			
76-13-1	1,1,2-Trichloro-1,2,2-trifluoroethane (Freon 113)	ND		mg/kg dry	0.0030	0.0060	1	EPA 8260C	09/14/2016 18:55	09/15/2016 02:55	SS
								Certifications: CTDOH,NELAC-NY10854,NJDEP			
79-00-5	1,1,2-Trichloroethane	ND		mg/kg dry	0.0030	0.0060	1	EPA 8260C	09/14/2016 18:55	09/15/2016 02:55	SS
								Certifications: CTDOH,NELAC-NY10854,NJDEP,PADEP			
75-34-3	1,1-Dichloroethane	ND		mg/kg dry	0.0030	0.0060	1	EPA 8260C	09/14/2016 18:55	09/15/2016 02:55	SS
								Certifications: CTDOH,NELAC-NY10854,NJDEP,PADEP			
75-35-4	1,1-Dichloroethylene	ND		mg/kg dry	0.0030	0.0060	1	EPA 8260C	09/14/2016 18:55	09/15/2016 02:55	SS
								Certifications: CTDOH,NELAC-NY10854,NJDEP,PADEP			
87-61-6	1,2,3-Trichlorobenzene	ND		mg/kg dry	0.0030	0.0060	1	EPA 8260C	09/14/2016 18:55	09/15/2016 02:55	SS
								Certifications: NELAC-NY10854,NJDEP			
96-18-4	1,2,3-Trichloropropane	ND		mg/kg dry	0.0030	0.0060	1	EPA 8260C	09/14/2016 18:55	09/15/2016 02:55	SS
								Certifications: NELAC-NY10854,NJDEP			
120-82-1	1,2,4-Trichlorobenzene	ND		mg/kg dry	0.0030	0.0060	1	EPA 8260C	09/14/2016 18:55	09/15/2016 02:55	SS
								Certifications: NELAC-NY10854,NJDEP			
[illegible]6	1,2,4-Trimethylbenzene	ND		mg/kg dry	0.0030	0.0060	1	EPA 8260C	09/14/2016 18:55	09/15/2016 02:55	SS
								Certifications: CTDOH,NELAC-NY10854,NJDEP			

Sample Information

Client Sample ID: **SB-04-14.5-15.0'** **York Sample ID:** **16I0323-05**

York Project (SDG) No.	Client Project ID	Matrix	Collection Date/Time	Date Received
16I0323	BEGS or OEGS (15-008-0265)	Soil	September 7, 2016 1:30 pm	09/09/2016

Volatile Organics, 8260 - Comprehensive

Log-in Notes: VOA-CONT **Sample Notes:** **VOA-CONT**

Sample Prepared by Method: EPA 5035A

CAS No.	Parameter	Result	Flag	Units	Reported to LOD/MDL	LOQ	Dilution	Reference Method	Date/Time Prepared	Date/Time Analyzed	Analyst
96-12-8	1,2-Dibromo-3-chloropropane	ND		mg/kg dry	0.0030	0.0060	1	EPA 8260C Certifications: CTDOH,NELAC-NY10854,NJDEP	09/14/2016 18:55	09/15/2016 02:55	SS
106-93-4	1,2-Dibromoethane	ND		mg/kg dry	0.0030	0.0060	1	EPA 8260C Certifications: CTDOH,NELAC-NY10854,NJDEP	09/14/2016 18:55	09/15/2016 02:55	SS
95-50-1	1,2-Dichlorobenzene	ND		mg/kg dry	0.0030	0.0060	1	EPA 8260C Certifications: CTDOH,NELAC-NY10854,NJDEP,PADEP	09/14/2016 18:55	09/15/2016 02:55	SS
107-06-2	1,2-Dichloroethane	ND		mg/kg dry	0.0030	0.0060	1	EPA 8260C Certifications: CTDOH,NELAC-NY10854,NJDEP,PADEP	09/14/2016 18:55	09/15/2016 02:55	SS
78-87-5	1,2-Dichloropropane	ND		mg/kg dry	0.0030	0.0060	1	EPA 8260C Certifications: CTDOH,NELAC-NY10854,NJDEP	09/14/2016 18:55	09/15/2016 02:55	SS
108-67-8	1,3,5-Trimethylbenzene	ND		mg/kg dry	0.0030	0.0060	1	EPA 8260C Certifications: CTDOH,NELAC-NY10854,NJDEP	09/14/2016 18:55	09/15/2016 02:55	SS
541-73-1	1,3-Dichlorobenzene	ND		mg/kg dry	0.0030	0.0060	1	EPA 8260C Certifications: CTDOH,NELAC-NY10854,NJDEP,PADEP	09/14/2016 18:55	09/15/2016 02:55	SS
106-46-7	1,4-Dichlorobenzene	ND		mg/kg dry	0.0030	0.0060	1	EPA 8260C Certifications: CTDOH,NELAC-NY10854,NJDEP,PADEP	09/14/2016 18:55	09/15/2016 02:55	SS
123-91-1	1,4-Dioxane	ND		mg/kg dry	0.060	0.12	1	EPA 8260C Certifications: NELAC-NY10854,NJDEP	09/14/2016 18:55	09/15/2016 02:55	SS
78-93-3	2-Butanone	ND		mg/kg dry	0.0030	0.0060	1	EPA 8260C Certifications: CTDOH,NELAC-NY10854,NJDEP	09/14/2016 18:55	09/15/2016 02:55	SS
591-78-6	2-Hexanone	ND		mg/kg dry	0.0030	0.0060	1	EPA 8260C Certifications: CTDOH,NELAC-NY10854,NJDEP	09/14/2016 18:55	09/15/2016 02:55	SS
108-10-1	4-Methyl-2-pentanone	ND		mg/kg dry	0.0030	0.0060	1	EPA 8260C Certifications: CTDOH,NELAC-NY10854,NJDEP	09/14/2016 18:55	09/15/2016 02:55	SS
67-64-1	**Acetone**	**0.0070**	J	mg/kg dry	0.0060	0.012	1	EPA 8260C Certifications: CTDOH,NELAC-NY10854,NJDEP	09/14/2016 18:55	09/15/2016 02:55	SS
107-02-8	Acrolein	ND		mg/kg dry	0.0060	0.012	1	EPA 8260C Certifications: CTDOH,NELAC-NY10854,NJDEP	09/14/2016 18:55	09/15/2016 02:55	SS
107-13-1	Acrylonitrile	ND		mg/kg dry	0.0030	0.0060	1	EPA 8260C Certifications: CTDOH,NELAC-NY10854,NJDEP	09/14/2016 18:55	09/15/2016 02:55	SS
71-43-2	Benzene	ND		mg/kg dry	0.0030	0.0060	1	EPA 8260C Certifications: CTDOH,NELAC-NY10854,NJDEP,PADEP	09/14/2016 18:55	09/15/2016 02:55	SS
74-97-5	Bromochloromethane	ND		mg/kg dry	0.0030	0.0060	1	EPA 8260C Certifications: NELAC-NY10854,NJDEP	09/14/2016 18:55	09/15/2016 02:55	SS
75-27-4	Bromodichloromethane	ND		mg/kg dry	0.0030	0.0060	1	EPA 8260C Certifications: CTDOH,NELAC-NY10854,NJDEP,PADEP	09/14/2016 18:55	09/15/2016 02:55	SS
75-25-2	Bromoform	ND		mg/kg dry	0.0030	0.0060	1	EPA 8260C Certifications: CTDOH,NELAC-NY10854,NJDEP,PADEP	09/14/2016 18:55	09/15/2016 02:55	SS
74-83-9	Bromomethane	ND		mg/kg dry	0.0030	0.0060	1	EPA 8260C Certifications: CTDOH,NELAC-NY10854,NJDEP,PADEP	09/14/2016 18:55	09/15/2016 02:55	SS
75-15-0	Carbon disulfide	ND		mg/kg dry	0.0030	0.0060	1	EPA 8260C Certifications: CTDOH,NELAC-NY10854,NJDEP	09/14/2016 18:55	09/15/2016 02:55	SS
56-23-5	Carbon tetrachloride	ND		mg/kg dry	0.0030	0.0060	1	EPA 8260C Certifications: CTDOH,NELAC-NY10854,NJDEP,PADEP	09/14/2016 18:55	09/15/2016 02:55	SS

Sample Information

Client Sample ID: SB-04-14.5-15.0'

York Sample ID: 16I0323-05

York Project (SDG) No.	Client Project ID	Matrix	Collection Date/Time	Date Received
16I0323	BEGS or OEGS (15-008-0265)	Soil	September 7, 2016 1:30 pm	09/09/2016

Volatile Organics, 8260 - Comprehensive

Log-in Notes: VOA-CONT **Sample Notes:** VOA-CONT

Sample Prepared by Method: EPA 5035A

CAS No.	Parameter	Result	Flag	Units	Reported to LOD/MDL	LOQ	Dilution	Reference Method	Date/Time Prepared	Date/Time Analyzed	Analyst
108-90-7	Chlorobenzene	ND		mg/kg dry	0.0030	0.0060	1	EPA 8260C Certifications: CTDOH,NELAC-NY10854,NJDEP,PADEP	09/14/2016 18:55	09/15/2016 02:55	SS
75-00-3	Chloroethane	ND		mg/kg dry	0.0030	0.0060	1	EPA 8260C Certifications: CTDOH,NELAC-NY10854,NJDEP,PADEP	09/14/2016 18:55	09/15/2016 02:55	SS
67-66-3	Chloroform	ND		mg/kg dry	0.0030	0.0060	1	EPA 8260C Certifications: CTDOH,NELAC-NY10854,NJDEP,PADEP	09/14/2016 18:55	09/15/2016 02:55	SS
74-87-3	Chloromethane	ND		mg/kg dry	0.0030	0.0060	1	EPA 8260C Certifications: CTDOH,NELAC-NY10854,NJDEP,PADEP	09/14/2016 18:55	09/15/2016 02:55	SS
156-59-2	cis-1,2-Dichloroethylene	ND		mg/kg dry	0.0030	0.0060	1	EPA 8260C Certifications: CTDOH,NELAC-NY10854,NJDEP	09/14/2016 18:55	09/15/2016 02:55	SS
10061-01-5	cis-1,3-Dichloropropylene	ND		mg/kg dry	0.0030	0.0060	1	EPA 8260C Certifications: CTDOH,NELAC-NY10854,NJDEP,PADEP	09/14/2016 18:55	09/15/2016 02:55	SS
110-82-7	Cyclohexane	ND		mg/kg dry	0.0030	0.0060	1	EPA 8260C Certifications: NELAC-NY10854,NJDEP	09/14/2016 18:55	09/15/2016 02:55	SS
[illegible]8-1	Dibromochloromethane	ND		mg/kg dry	0.0030	0.0060	1	EPA 8260C Certifications: NELAC-NY10854,NJDEP,PADEP	09/14/2016 18:55	09/15/2016 02:55	SS
74-95-3	Dibromomethane	ND		mg/kg dry	0.0030	0.0060	1	EPA 8260C Certifications: NELAC-NY10854,NJDEP	09/14/2016 18:55	09/15/2016 02:55	SS
75-71-8	Dichlorodifluoromethane	ND		mg/kg dry	0.0030	0.0060	1	EPA 8260C Certifications: NELAC-NY10854,NJDEP	09/14/2016 18:55	09/15/2016 02:55	SS
100-41-4	Ethyl Benzene	ND		mg/kg dry	0.0030	0.0060	1	EPA 8260C Certifications: CTDOH,NELAC-NY10854,NJDEP,PADEP	09/14/2016 18:55	09/15/2016 02:55	SS
87-68-3	Hexachlorobutadiene	ND		mg/kg dry	0.0030	0.0060	1	EPA 8260C Certifications: NELAC-NY10854,NJDEP	09/14/2016 18:55	09/15/2016 02:55	SS
98-82-8	Isopropylbenzene	ND		mg/kg dry	0.0030	0.0060	1	EPA 8260C Certifications: CTDOH,NELAC-NY10854,NJDEP	09/14/2016 18:55	09/15/2016 02:55	SS
79-20-9	Methyl acetate	ND		mg/kg dry	0.0030	0.0060	1	EPA 8260C Certifications: NELAC-NY10854,NJDEP	09/14/2016 18:55	09/15/2016 02:55	SS
1634-04-4	Methyl tert-butyl ether (MTBE)	ND		mg/kg dry	0.0030	0.0060	1	EPA 8260C Certifications: CTDOH,NELAC-NY10854,NJDEP	09/14/2016 18:55	09/15/2016 02:55	SS
108-87-2	Methylcyclohexane	ND		mg/kg dry	0.0030	0.0060	1	EPA 8260C Certifications: NELAC-NY10854,NJDEP	09/14/2016 18:55	09/15/2016 02:55	SS
75-09-2	Methylene chloride	ND		mg/kg dry	0.0060	0.012	1	EPA 8260C Certifications: CTDOH,NELAC-NY10854,NJDEP,PADEP	09/14/2016 18:55	09/15/2016 02:55	SS
104-51-8	n-Butylbenzene	ND		mg/kg dry	0.0030	0.0060	1	EPA 8260C Certifications: CTDOH,NELAC-NY10854,NJDEP	09/14/2016 18:55	09/15/2016 02:55	SS
103-65-1	n-Propylbenzene	ND		mg/kg dry	0.0030	0.0060	1	EPA 8260C Certifications: CTDOH,NELAC-NY10854,NJDEP	09/14/2016 18:55	09/15/2016 02:55	SS
95-47-6	o-Xylene	ND		mg/kg dry	0.0030	0.0060	1	EPA 8260C Certifications: CTDOH,NELAC-NY10854	09/14/2016 18:55	09/15/2016 02:55	SS
179601-23-1	p- & m- Xylenes	ND		mg/kg dry	0.0060	0.012	1	EPA 8260C Certifications: CTDOH,NELAC-NY10854	09/14/2016 18:55	09/15/2016 02:55	SS
[illegible]6	p-Isopropyltoluene	ND		mg/kg dry	0.0030	0.0060	1	EPA 8260C Certifications: CTDOH,NELAC-NY10854,NJDEP	09/14/2016 18:55	09/15/2016 02:55	SS

Sample Information

Client Sample ID: SB-04-14.5-15.0' **York Sample ID:** 16I0323-05

York Project (SDG) No.	Client Project ID	Matrix	Collection Date/Time	Date Received
16I0323	BEGS or OEGS (15-008-0265)	Soil	September 7, 2016 1:30 pm	09/09/2016

Volatile Organics, 8260 - Comprehensive **Log-in Notes:** VOA-CONT **Sample Notes:** VOA-CONT

Sample Prepared by Method: EPA 5035A

CAS No.	Parameter	Result	Flag	Units	Reported to LOD/MDL	LOQ	Dilution	Reference Method	Date/Time Prepared	Date/Time Analyzed	Analyst
135-98-8	sec-Butylbenzene	ND		mg/kg dry	0.0030	0.0060	1	EPA 8260C Certifications: CTDOH,NELAC-NY10854,NJDEP	09/14/2016 18:55	09/15/2016 02:55	SS
100-42-5	Styrene	ND		mg/kg dry	0.0030	0.0060	1	EPA 8260C Certifications: CTDOH,NELAC-NY10854,NJDEP	09/14/2016 18:55	09/15/2016 02:55	SS
75-65-0	tert-Butyl alcohol (TBA)	ND		mg/kg dry	0.0030	0.0060	1	EPA 8260C Certifications: NELAC-NY10854,NJDEP	09/14/2016 18:55	09/15/2016 02:55	SS
98-06-6	tert-Butylbenzene	ND		mg/kg dry	0.0030	0.0060	1	EPA 8260C Certifications: CTDOH,NELAC-NY10854,NJDEP	09/14/2016 18:55	09/15/2016 02:55	SS
127-18-4	Tetrachloroethylene	ND		mg/kg dry	0.0030	0.0060	1	EPA 8260C Certifications: CTDOH,NELAC-NY10854,NJDEP,PADEP	09/14/2016 18:55	09/15/2016 02:55	SS
108-88-3	Toluene	ND		mg/kg dry	0.0030	0.0060	1	EPA 8260C Certifications: CTDOH,NELAC-NY10854,NJDEP,PADEP	09/14/2016 18:55	09/15/2016 02:55	SS
156-60-5	trans-1,2-Dichloroethylene	ND		mg/kg dry	0.0030	0.0060	1	EPA 8260C Certifications: CTDOH,NELAC-NY10854,NJDEP	09/14/2016 18:55	09/15/2016 02:55	SS
10061-02-6	trans-1,3-Dichloropropylene	ND		mg/kg dry	0.0030	0.0060	1	EPA 8260C Certifications: CTDOH,NELAC-NY10854,NJDEP,PADEP	09/14/2016 18:55	09/15/2016 02:55	SS
79-01-6	Trichloroethylene	ND		mg/kg dry	0.0030	0.0060	1	EPA 8260C Certifications: CTDOH,NELAC-NY10854,NJDEP,PADEP	09/14/2016 18:55	09/15/2016 02:55	SS
75-69-4	Trichlorofluoromethane	ND		mg/kg dry	0.0030	0.0060	1	EPA 8260C Certifications: CTDOH,NELAC-NY10854,NJDEP,PADEP	09/14/2016 18:55	09/15/2016 02:55	SS
75-01-4	Vinyl Chloride	ND		mg/kg dry	0.0030	0.0060	1	EPA 8260C Certifications: CTDOH,NELAC-NY10854,NJDEP,PADEP	09/14/2016 18:55	09/15/2016 02:55	SS
1330-20-7	Xylenes, Total	ND		mg/kg dry	0.0089	0.018	1	EPA 8260C Certifications: CTDOH,NELAC-NY10854,NJDEP,PADEP	09/14/2016 18:55	09/15/2016 02:55	SS

	Surrogate Recoveries	Result	Acceptance Range
17060-07-0	*Surrogate: 1,2-Dichloroethane-d4*	*94.0 %*	*77-125*
2037-26-5	*Surrogate: Toluene-d8*	*96.0 %*	*85-120*
460-00-4	*Surrogate: p-Bromofluorobenzene*	*101 %*	*76-130*

Total Solids **Log-in Notes:** VOA-CONT **Sample Notes:**

Sample Prepared by Method: % Solids Prep

CAS No.	Parameter	Result	Flag	Units	LOD/MDL	Reported to LOQ	Dilution	Reference Method	Date/Time Prepared	Date/Time Analyzed	Analyst
solids	*** % Solids**	**84.0**		%	0.100	0.100	1	SM 2540G Certifications: CTDOH	09/15/2016 08:08	09/15/2016 14:32	LAB

Sample Information

Client Sample ID: SB-04-Comp **York Sample ID:** 16I0323-06

York Project (SDG) No.	Client Project ID	Matrix	Collection Date/Time	Date Recei
16I0323	BEGS or OEGS (15-008-0265)	Soil	September 7, 2016 1:40 pm	09/09/2

Sample Information

Client Sample ID: SB-04-Comp

York Sample ID: 16I0323-06

York Project (SDG) No.	Client Project ID	Matrix	Collection Date/Time	Date Received
16I0323	BEGS or OEGS (15-008-0265)	Soil	September 7, 2016 1:40 pm	09/09/2016

Semi-Volatiles, PAH Target List

Log-in Notes: VOA-CONT **Sample Notes:**

Sample Prepared by Method: EPA 3550C

CAS No.	Parameter	Result	Flag	Units	Reported to LOD/MDL	LOQ	Dilution	Reference Method	Date/Time Prepared	Date/Time Analyzed	Analyst
91-57-6	2-Methylnaphthalene	ND		mg/kg dry	0.0463	0.0924	2	EPA 8270D Certifications: CTDOH,NELAC-NY10854,NJDEP,PADEP	09/15/2016 08:12	09/16/2016 11:40	KH
83-32-9	Acenaphthene	ND		mg/kg dry	0.0463	0.0924	2	EPA 8270D Certifications: CTDOH,NELAC-NY10854,NJDEP,PADEP	09/15/2016 08:12	09/16/2016 11:40	KH
208-96-8	Acenaphthylene	ND		mg/kg dry	0.0463	0.0924	2	EPA 8270D Certifications: CTDOH,NELAC-NY10854,NJDEP,PADEP	09/15/2016 08:12	09/16/2016 11:40	KH
120-12-7	**Anthracene**	**0.0562**	J	mg/kg dry	0.0463	0.0924	2	EPA 8270D Certifications: CTDOH,NELAC-NY10854,NJDEP,PADEP	09/15/2016 08:12	09/16/2016 11:40	KH
56-55-3	**Benzo(a)anthracene**	**0.0695**	J	mg/kg dry	0.0463	0.0924	2	EPA 8270D Certifications: CTDOH,NELAC-NY10854,NJDEP,PADEP	09/15/2016 08:12	09/16/2016 11:40	KH
50-32-8	Benzo(a)pyrene	ND		mg/kg dry	0.0463	0.0924	2	EPA 8270D Certifications: CTDOH,NELAC-NY10854,NJDEP,PADEP	09/15/2016 08:12	09/16/2016 11:40	KH
205-99-2	Benzo(b)fluoranthene	ND		mg/kg dry	0.0463	0.0924	2	EPA 8270D Certifications: CTDOH,NELAC-NY10854,NJDEP,PADEP	09/15/2016 08:12	09/16/2016 11:40	KH
191-24-2	Benzo(g,h,i)perylene	ND		mg/kg dry	0.0463	0.0924	2	EPA 8270D Certifications: CTDOH,NELAC-NY10854,NJDEP,PADEP	09/15/2016 08:12	09/16/2016 11:40	KH
207-08-9	Benzo(k)fluoranthene	ND		mg/kg dry	0.0463	0.0924	2	EPA 8270D Certifications: CTDOH,NELAC-NY10854,NJDEP,PADEP	09/15/2016 08:12	09/16/2016 11:40	KH
218-01-9	**Chrysene**	**0.0783**	J	mg/kg dry	0.0463	0.0924	2	EPA 8270D Certifications: CTDOH,NELAC-NY10854,NJDEP,PADEP	09/15/2016 08:12	09/16/2016 11:40	KH
53-70-3	Dibenzo(a,h)anthracene	ND		mg/kg dry	0.0463	0.0924	2	EPA 8270D Certifications: CTDOH,NELAC-NY10854,NJDEP,PADEP	09/15/2016 08:12	09/16/2016 11:40	KH
206-44-0	**Fluoranthene**	**0.185**		mg/kg dry	0.0463	0.0924	2	EPA 8270D Certifications: CTDOH,NELAC-NY10854,NJDEP,PADEP	09/15/2016 08:12	09/16/2016 11:40	KH
86-73-7	Fluorene	ND		mg/kg dry	0.0463	0.0924	2	EPA 8270D Certifications: NELAC-NY10854,NJDEP,PADEP	09/15/2016 08:12	09/16/2016 11:40	KH
193-39-5	Indeno(1,2,3-cd)pyrene	ND		mg/kg dry	0.0463	0.0924	2	EPA 8270D Certifications: CTDOH,NELAC-NY10854,NJDEP,PADEP	09/15/2016 08:12	09/16/2016 11:40	KH
91-20-3	Naphthalene	ND		mg/kg dry	0.0463	0.0924	2	EPA 8270D Certifications: CTDOH,NELAC-NY10854,NJDEP,PADEP	09/15/2016 08:12	09/16/2016 11:40	KH
85-01-8	**Phenanthrene**	**0.153**		mg/kg dry	0.0463	0.0924	2	EPA 8270D Certifications: CTDOH,NELAC-NY10854,NJDEP,PADEP	09/15/2016 08:12	09/16/2016 11:40	KH
129-00-0	**Pyrene**	**0.171**		mg/kg dry	0.0463	0.0924	2	EPA 8270D Certifications: CTDOH,NELAC-NY10854,NJDEP,PADEP	09/15/2016 08:12	09/16/2016 11:40	KH

	Surrogate Recoveries	Result	Acceptance Range
4165-60-0	*Surrogate: Nitrobenzene-d5*	*37.7 %*	*22-108*
321-60-8	*Surrogate: 2-Fluorobiphenyl*	*56.2 %*	*21-113*
1718-51-0	*Surrogate: Terphenyl-d14*	*47.4 %*	*24-116*

Polychlorinated Biphenyls (PCB)

Log-in Notes: VOA-CONT **Sample Notes:**

Sample Prepared by Method: EPA 3550C

CAS No.	Parameter	Result	Flag	Units	LOD/MDL	Reported to LOQ	Dilution	Reference Method	Date/Time Prepared	Date/Time Analyzed	Analyst

Sample Information

Client Sample ID: SB-04-Comp

York Sample ID: 16I0323-06

York Project (SDG) No.	Client Project ID	Matrix	Collection Date/Time	Date Received
16I0323	BEGS or OEGS (15-008-0265)	Soil	September 7, 2016 1:40 pm	09/09/2016

Polychlorinated Biphenyls (PCB)

Log-in Notes: VOA-CONT **Sample Notes:**

Sample Prepared by Method: EPA 3550C

CAS No.	Parameter	Result	Flag	Units	LOD/MDL	Reported to LOQ	Dilution	Reference Method	Date/Time Prepared	Date/Time Analyzed	Analyst
12674-11-2	Aroclor 1016	ND		mg/kg dry	0.0185	0.0185	1	EPA 8082A Certifications: NELAC-NY10854,CTDOH,NJDEP,PADEP	09/13/2016 09:10	09/13/2016 23:05	AMC
11104-28-2	Aroclor 1221	ND		mg/kg dry	0.0185	0.0185	1	EPA 8082A Certifications: NELAC-NY10854,CTDOH,NJDEP,PADEP	09/13/2016 09:10	09/13/2016 23:05	AMC
11141-16-5	Aroclor 1232	ND		mg/kg dry	0.0185	0.0185	1	EPA 8082A Certifications: NELAC-NY10854,CTDOH,NJDEP,PADEP	09/13/2016 09:10	09/13/2016 23:05	AMC
53469-21-9	Aroclor 1242	ND		mg/kg dry	0.0185	0.0185	1	EPA 8082A Certifications: NELAC-NY10854,CTDOH,NJDEP,PADEP	09/13/2016 09:10	09/13/2016 23:05	AMC
12672-29-6	Aroclor 1248	ND		mg/kg dry	0.0185	0.0185	1	EPA 8082A Certifications: NELAC-NY10854,CTDOH,NJDEP,PADEP	09/13/2016 09:10	09/13/2016 23:05	AMC
11097-69-1	Aroclor 1254	ND		mg/kg dry	0.0185	0.0185	1	EPA 8082A Certifications: NELAC-NY10854,CTDOH,NJDEP,PADEP	09/13/2016 09:10	09/13/2016 23:05	AMC
11096-82-5	Aroclor 1260	ND		mg/kg dry	0.0185	0.0185	1	EPA 8082A Certifications: NELAC-NY10854,CTDOH,NJDEP,PADEP	09/13/2016 09:10	09/13/2016 23:05	AMC
1336-36-3	* Total PCBs	ND		mg/kg dry	0.0185	0.0185	1	EPA 8082A Certifications:	09/13/2016 09:10	09/13/2016 23:05	AMC

	Surrogate Recoveries	Result	Acceptance Range
877-09-8	*Surrogate: Tetrachloro-m-xylene*	*48.0 %*	*30-140*
2051-24-3	*Surrogate: Decachlorobiphenyl*	*52.5 %*	*30-140*

Total Petroleum Hydrocarbons-DRO (C10-C28)

Log-in Notes: VOA-CONT **Sample Notes:**

Sample Prepared by Method: EPA 3550C

CAS No.	Parameter	Result	Flag	Units	LOD/MDL	Reported to LOQ	Dilution	Reference Method	Date/Time Prepared	Date/Time Analyzed	Analyst
	Total Petroleum Hydrocarbons-DRO	ND		mg/kg dry	3.77	11.1	1	EPA 8015D Certifications: NELAC-NY10854,NJDEP,PADEP	09/15/2016 07:34	09/15/2016 19:25	AMC

	Surrogate Recoveries	Result	Acceptance Range
638-68-6	*Surrogate: Triacontane*	*74.8 %*	*30-150*

Total Petroleum Hydrocarbons-GRO (C5-C10)

Log-in Notes: VOA-CONT **Sample Notes:**

Sample Prepared by Method: EPA 5035A

CAS No.	Parameter	Result	Flag	Units	LOD/MDL	Reported to LOQ	Dilution	Reference Method	Date/Time Prepared	Date/Time Analyzed	Analyst
	Total Petroleum Hydrocarbons-GRO	ND		mg/kg dry	44.3	88.7	100	EPA 8015D Certifications: NELAC-NY10854,NJDEP,PADEP	09/14/2016 08:58	09/14/2016 18:47	OW

	Surrogate Recoveries	Result	Acceptance Range
460-00-4	*Surrogate: p-Bromofluorobenzene*	*92.1 %*	*70-130*

Metals, TCLP RCRA

Log-in Notes: VOA-CONT **Sample Notes:**

Sample Information

Client Sample ID: SB-04-Comp

York Sample ID: 16I0323-06

York Project (SDG) No.	Client Project ID	Matrix	Collection Date/Time	Date Received
16I0323	BEGS or OEGS (15-008-0265)	Soil	September 7, 2016 1:40 pm	09/09/2016

Sample Prepared by Method: EPA 3015A/1311

CAS No.	Parameter	Result	Flag	Units	LOD/MDL	Reported to LOQ	Dilution	Reference Method	Date/Time Prepared	Date/Time Analyzed	Analyst
7440-38-2	Arsenic	ND		mg/L	0.004	0.004	1	EPA 6010C/1311 Certifications: CTDOH,NELAC-NY10854,NJDEP,PADEP	09/13/2016 12:22	09/14/2016 06:06	KV
7440-39-3	**Barium**	**0.362**		mg/L	0.011	0.011	1	EPA 6010C/1311 Certifications: CTDOH,NELAC-NY10854,NJDEP,PADEP	09/13/2016 12:22	09/14/2016 06:06	KV
7440-43-9	Cadmium	ND		mg/L	0.003	0.003	1	EPA 6010C/1311 Certifications: CTDOH,NELAC-NY10854,NJDEP,PADEP	09/13/2016 12:22	09/14/2016 06:06	KV
7440-47-3	Chromium	ND		mg/L	0.006	0.006	1	EPA 6010C/1311 Certifications: CTDOH,NELAC-NY10854,NJDEP,PADEP	09/13/2016 12:22	09/14/2016 06:06	KV
7439-92-1	**Lead**	**0.017**		mg/L	0.003	0.003	1	EPA 6010C/1311 Certifications: CTDOH,NELAC-NY10854,NJDEP,PADEP	09/13/2016 12:22	09/14/2016 06:06	KV
7782-49-2	**Selenium**	**0.018**	M-SeT C, B	mg/L	0.011	0.011	1	EPA 6010C/1311 Certifications: CTDOH,NELAC-NY10854,NJDEP,PADEP	09/13/2016 12:22	09/14/2016 06:06	KV
7440-22-4	Silver	ND		mg/L	0.006	0.006	1	EPA 6010C/1311 Certifications: CTDOH,NELAC-NY10854,NJDEP,PADEP	09/13/2016 12:22	09/14/2016 06:06	KV

ercury TCLP by 7473

Log-in Notes: VOA-CONT **Sample Notes:**

Sample Prepared by Method: EPA 7473 water

CAS No.	Parameter	Result	Flag	Units	LOD/MDL	Reported to LOQ	Dilution	Reference Method	Date/Time Prepared	Date/Time Analyzed	Analyst
7439-97-6	Mercury	ND		mg/L	0.0000390	0.000200	1	EPA 7473/1311 Certifications: CTDOH,NJDEP,PADEP,NELAC-NY10854	09/13/2016 12:33	09/14/2016 06:59	ALD

Ignitability

Log-in Notes: VOA-CONT **Sample Notes:**

Sample Prepared by Method: Analysis Preparation

CAS No.	Parameter	Result	Flag	Units	LOD/MDL	Reported to LOQ	Dilution	Reference Method	Date/Time Prepared	Date/Time Analyzed	Analyst
	* Ignitability	Non-Ignit.		-	1	1	1	EPA 1030P Certifications: CTDOH,PADEP	09/13/2016 14:36	09/13/2016 14:58	AD

Total Solids

Log-in Notes: VOA-CONT **Sample Notes:**

Sample Prepared by Method: % Solids Prep

CAS No.	Parameter	Result	Flag	Units	LOD/MDL	Reported to LOQ	Dilution	Reference Method	Date/Time Prepared	Date/Time Analyzed	Analyst
solids	*** % Solids**	**90.2**		%	0.100	0.100	1	SM 2540G Certifications: CTDOH	09/15/2016 08:08	09/15/2016 14:32	LAB

Corrosivity

Log-in Notes: VOA-CONT **Sample Notes:**

Sample Prepared by Method: Analysis Preparation

CAS No.	Parameter	Result	Flag	Units	LOD/MDL	Reported to LOQ	Dilution	Reference Method	Date/Time Prepared	Date/Time Analyzed	Analyst
	pH	**10.2**	HT-pH	pH units		0.500	1	EPA 9045D Certifications: NELAC-NY10854,CTDOH,PADEP	09/13/2016 11:58	09/13/2016 14:32	LAB

eactivity-Cyanide

Log-in Notes: VOA-CONT **Sample Notes:**

Sample Information

Client Sample ID: SB-04-Comp

York Sample ID: 16I0323-06

York Project (SDG) No.	Client Project ID	Matrix	Collection Date/Time	Date Received
16I0323	BEGS or OEGS (15-008-0265)	Soil	September 7, 2016 1:40 pm	09/09/2016

Sample Prepared by Method: Analysis Preparation

CAS No.	Parameter	Result	Flag	Units	LOD/MDL	Reported to LOQ	Dilution	Reference Method	Date/Time Prepared	Date/Time Analyzed	Analyst
	* Reactivity - Cyanide	ND		mg/kg	0.250	0.250	1	EPA SW-846 Ch.7.3.3	09/14/2016 10:46	09/14/2016 16:33	AD
								Certifications: CTDOH,PADEP			

Reactivity-Sulfide **Log-in Notes:** VOA-CONT **Sample Notes:**

Sample Prepared by Method: Analysis Preparation

CAS No.	Parameter	Result	Flag	Units	LOD/MDL	Reported to LOQ	Dilution	Reference Method	Date/Time Prepared	Date/Time Analyzed	Analyst
	*** Reactivity - Sulfide**	**32.0**		mg/kg	15.0	15.0	1	EPA SW-846 Ch.7.3.4	09/14/2016 10:47	09/14/2016 16:30	AD
								Certifications: CTDOH,PADEP			

TCLP Extraction for METALS EPA 1311 **Log-in Notes:** VOA-CONT **Sample Notes:**

Sample Prepared by Method: EPA SW 846-1311 TCLP ext. for metals

CAS No.	Parameter	Result	Flag	Units	LOD/MDL	Reported to LOQ	Dilution	Reference Method	Date/Time Prepared	Date/Time Analyzed	Analyst
	TCLP Extraction	Completed		N/A	1.00	1.00	1	EPA 1311	09/12/2016 18:51	09/13/2016 14:06	TJM
								Certifications: NELAC-NY10854,CTDOH,NJDEP,PADEP			

Sample Information

Client Sample ID: SB-05-14.5-15.0'

York Sample ID: 16I0323-07

York Project (SDG) No.	Client Project ID	Matrix	Collection Date/Time	Date Received
16I0323	BEGS or OEGS (15-008-0265)	Soil	September 7, 2016 11:45 am	09/09/2016

Volatile Organics, 8260 - Comprehensive **Log-in Notes:** VOA-CONT **Sample Notes:** VOA-CONT

Sample Prepared by Method: EPA 5035A

CAS No.	Parameter	Result	Flag	Units	LOD/MDL	Reported to LOQ	Dilution	Reference Method	Date/Time Prepared	Date/Time Analyzed	Analyst
630-20-6	1,1,1,2-Tetrachloroethane	ND		mg/kg dry	0.0029	0.0059	1	EPA 8260C	09/14/2016 18:55	09/15/2016 03:28	SS
								Certifications: CTDOH,NELAC-NY10854,NJDEP			
71-55-6	1,1,1-Trichloroethane	ND		mg/kg dry	0.0029	0.0059	1	EPA 8260C	09/14/2016 18:55	09/15/2016 03:28	SS
								Certifications: CTDOH,NELAC-NY10854,NJDEP,PADEP			
79-34-5	1,1,2,2-Tetrachloroethane	ND		mg/kg dry	0.0029	0.0059	1	EPA 8260C	09/14/2016 18:55	09/15/2016 03:28	SS
								Certifications: CTDOH,NELAC-NY10854,NJDEP,PADEP			
76-13-1	1,1,2-Trichloro-1,2,2-trifluoroethane (Freon 113)	ND		mg/kg dry	0.0029	0.0059	1	EPA 8260C	09/14/2016 18:55	09/15/2016 03:28	SS
								Certifications: CTDOH,NELAC-NY10854,NJDEP			
79-00-5	1,1,2-Trichloroethane	ND		mg/kg dry	0.0029	0.0059	1	EPA 8260C	09/14/2016 18:55	09/15/2016 03:28	SS
								Certifications: CTDOH,NELAC-NY10854,NJDEP,PADEP			
75-34-3	1,1-Dichloroethane	ND		mg/kg dry	0.0029	0.0059	1	EPA 8260C	09/14/2016 18:55	09/15/2016 03:28	SS
								Certifications: CTDOH,NELAC-NY10854,NJDEP,PADEP			
75-35-4	1,1-Dichloroethylene	ND		mg/kg dry	0.0029	0.0059	1	EPA 8260C	09/14/2016 18:55	09/15/2016 03:28	SS
								Certifications: CTDOH,NELAC-NY10854,NJDEP,PADEP			
87-61-6	1,2,3-Trichlorobenzene	ND		mg/kg dry	0.0029	0.0059	1	EPA 8260C	09/14/2016 18:55	09/15/2016 03:28	SS
								Certifications: NELAC-NY10854,NJDEP			

Sample Information

Client Sample ID: SB-05-14.5-15.0' **York Sample ID:** 16I0323-07

York Project (SDG) No.	Client Project ID	Matrix	Collection Date/Time	Date Received
16I0323	BEGS or OEGS (15-008-0265)	Soil	September 7, 2016 11:45 am	09/09/2016

Volatile Organics, 8260 - Comprehensive

Log-in Notes: VOA-CONT **Sample Notes:** VOA-CONT

Sample Prepared by Method: EPA 5035A

CAS No.	Parameter	Result	Flag	Units	Reported to LOD/MDL	LOQ	Dilution	Reference Method	Date/Time Prepared	Date/Time Analyzed	Analyst
96-18-4	1,2,3-Trichloropropane	ND		mg/kg dry	0.0029	0.0059	1	EPA 8260C Certifications: NELAC-NY10854,NJDEP	09/14/2016 18:55	09/15/2016 03:28	SS
120-82-1	1,2,4-Trichlorobenzene	ND		mg/kg dry	0.0029	0.0059	1	EPA 8260C Certifications: NELAC-NY10854,NJDEP	09/14/2016 18:55	09/15/2016 03:28	SS
95-63-6	1,2,4-Trimethylbenzene	ND		mg/kg dry	0.0029	0.0059	1	EPA 8260C Certifications: CTDOH,NELAC-NY10854,NJDEP	09/14/2016 18:55	09/15/2016 03:28	SS
96-12-8	1,2-Dibromo-3-chloropropane	ND		mg/kg dry	0.0029	0.0059	1	EPA 8260C Certifications: CTDOH,NELAC-NY10854,NJDEP	09/14/2016 18:55	09/15/2016 03:28	SS
106-93-4	1,2-Dibromoethane	ND		mg/kg dry	0.0029	0.0059	1	EPA 8260C Certifications: CTDOH,NELAC-NY10854,NJDEP	09/14/2016 18:55	09/15/2016 03:28	SS
95-50-1	1,2-Dichlorobenzene	ND		mg/kg dry	0.0029	0.0059	1	EPA 8260C Certifications: CTDOH,NELAC-NY10854,NJDEP,PADEP	09/14/2016 18:55	09/15/2016 03:28	SS
107-06-2	1,2-Dichloroethane	ND		mg/kg dry	0.0029	0.0059	1	EPA 8260C Certifications: CTDOH,NELAC-NY10854,NJDEP,PADEP	09/14/2016 18:55	09/15/2016 03:28	SS
[illegible]7-5	1,2-Dichloropropane	ND		mg/kg dry	0.0029	0.0059	1	EPA 8260C Certifications: CTDOH,NELAC-NY10854,NJDEP	09/14/2016 18:55	09/15/2016 03:28	SS
108-67-8	1,3,5-Trimethylbenzene	ND		mg/kg dry	0.0029	0.0059	1	EPA 8260C Certifications: CTDOH,NELAC-NY10854,NJDEP	09/14/2016 18:55	09/15/2016 03:28	SS
541-73-1	1,3-Dichlorobenzene	ND		mg/kg dry	0.0029	0.0059	1	EPA 8260C Certifications: CTDOH,NELAC-NY10854,NJDEP,PADEP	09/14/2016 18:55	09/15/2016 03:28	SS
106-46-7	1,4-Dichlorobenzene	ND		mg/kg dry	0.0029	0.0059	1	EPA 8260C Certifications: CTDOH,NELAC-NY10854,NJDEP,PADEP	09/14/2016 18:55	09/15/2016 03:28	SS
123-91-1	1,4-Dioxane	ND		mg/kg dry	0.059	0.12	1	EPA 8260C Certifications: NELAC-NY10854,NJDEP	09/14/2016 18:55	09/15/2016 03:28	SS
78-93-3	2-Butanone	ND		mg/kg dry	0.0029	0.0059	1	EPA 8260C Certifications: CTDOH,NELAC-NY10854,NJDEP	09/14/2016 18:55	09/15/2016 03:28	SS
591-78-6	2-Hexanone	ND		mg/kg dry	0.0029	0.0059	1	EPA 8260C Certifications: CTDOH,NELAC-NY10854,NJDEP	09/14/2016 18:55	09/15/2016 03:28	SS
108-10-1	4-Methyl-2-pentanone	ND		mg/kg dry	0.0029	0.0059	1	EPA 8260C Certifications: CTDOH,NELAC-NY10854,NJDEP	09/14/2016 18:55	09/15/2016 03:28	SS
67-64-1	**Acetone**	**0.0070**	J	mg/kg dry	0.0059	0.012	1	EPA 8260C Certifications: CTDOH,NELAC-NY10854,NJDEP	09/14/2016 18:55	09/15/2016 03:28	SS
107-02-8	Acrolein	ND		mg/kg dry	0.0059	0.012	1	EPA 8260C Certifications: CTDOH,NELAC-NY10854,NJDEP	09/14/2016 18:55	09/15/2016 03:28	SS
107-13-1	Acrylonitrile	ND		mg/kg dry	0.0029	0.0059	1	EPA 8260C Certifications: CTDOH,NELAC-NY10854,NJDEP	09/14/2016 18:55	09/15/2016 03:28	SS
71-43-2	Benzene	ND		mg/kg dry	0.0029	0.0059	1	EPA 8260C Certifications: CTDOH,NELAC-NY10854,NJDEP,PADEP	09/14/2016 18:55	09/15/2016 03:28	SS
74-97-5	Bromochloromethane	ND		mg/kg dry	0.0029	0.0059	1	EPA 8260C Certifications: NELAC-NY10854,NJDEP	09/14/2016 18:55	09/15/2016 03:28	SS
75-27-4	Bromodichloromethane	ND		mg/kg dry	0.0029	0.0059	1	EPA 8260C Certifications: CTDOH,NELAC-NY10854,NJDEP,PADEP	09/14/2016 18:55	09/15/2016 03:28	SS
[illegible]-2	Bromoform	ND		mg/kg dry	0.0029	0.0059	1	EPA 8260C Certifications: CTDOH,NELAC-NY10854,NJDEP,PADEP	09/14/2016 18:55	09/15/2016 03:28	SS

Sample Information

Client Sample ID: SB-05-14.5-15.0'

York Sample ID: 16I0323-07

York Project (SDG) No.	Client Project ID	Matrix	Collection Date/Time	Date Received
16I0323	BEGS or OEGS (15-008-0265)	Soil	September 7, 2016 11:45 am	09/09/2016

Volatile Organics, 8260 - Comprehensive

Log-in Notes: VOA-CONT **Sample Notes:** VOA-CONT

Sample Prepared by Method: EPA 5035A

CAS No.	Parameter	Result	Flag	Units	Reported to LOD/MDL	LOQ	Dilution	Reference Method	Date/Time Prepared	Date/Time Analyzed	Analyst
74-83-9	Bromomethane	ND		mg/kg dry	0.0029	0.0059	1	EPA 8260C	09/14/2016 18:55	09/15/2016 03:28	SS
								Certifications: CTDOH,NELAC-NY10854,NJDEP,PADEP			
75-15-0	Carbon disulfide	ND		mg/kg dry	0.0029	0.0059	1	EPA 8260C	09/14/2016 18:55	09/15/2016 03:28	SS
								Certifications: CTDOH,NELAC-NY10854,NJDEP			
56-23-5	Carbon tetrachloride	ND		mg/kg dry	0.0029	0.0059	1	EPA 8260C	09/14/2016 18:55	09/15/2016 03:28	SS
								Certifications: CTDOH,NELAC-NY10854,NJDEP,PADEP			
108-90-7	Chlorobenzene	ND		mg/kg dry	0.0029	0.0059	1	EPA 8260C	09/14/2016 18:55	09/15/2016 03:28	SS
								Certifications: CTDOH,NELAC-NY10854,NJDEP,PADEP			
75-00-3	Chloroethane	ND		mg/kg dry	0.0029	0.0059	1	EPA 8260C	09/14/2016 18:55	09/15/2016 03:28	SS
								Certifications: CTDOH,NELAC-NY10854,NJDEP,PADEP			
67-66-3	Chloroform	ND		mg/kg dry	0.0029	0.0059	1	EPA 8260C	09/14/2016 18:55	09/15/2016 03:28	SS
								Certifications: CTDOH,NELAC-NY10854,NJDEP,PADEP			
74-87-3	Chloromethane	ND		mg/kg dry	0.0029	0.0059	1	EPA 8260C	09/14/2016 18:55	09/15/2016 03:28	SS
								Certifications: CTDOH,NELAC-NY10854,NJDEP,PADEP			
156-59-2	cis-1,2-Dichloroethylene	ND		mg/kg dry	0.0029	0.0059	1	EPA 8260C	09/14/2016 18:55	09/15/2016 03:28	SS
								Certifications: CTDOH,NELAC-NY10854,NJDEP			
10061-01-5	cis-1,3-Dichloropropylene	ND		mg/kg dry	0.0029	0.0059	1	EPA 8260C	09/14/2016 18:55	09/15/2016 03:28	SS
								Certifications: CTDOH,NELAC-NY10854,NJDEP,PADEP			
110-82-7	Cyclohexane	ND		mg/kg dry	0.0029	0.0059	1	EPA 8260C	09/14/2016 18:55	09/15/2016 03:28	SS
								Certifications: NELAC-NY10854,NJDEP			
124-48-1	Dibromochloromethane	ND		mg/kg dry	0.0029	0.0059	1	EPA 8260C	09/14/2016 18:55	09/15/2016 03:28	SS
								Certifications: NELAC-NY10854,NJDEP,PADEP			
74-95-3	Dibromomethane	ND		mg/kg dry	0.0029	0.0059	1	EPA 8260C	09/14/2016 18:55	09/15/2016 03:28	SS
								Certifications: NELAC-NY10854,NJDEP			
75-71-8	Dichlorodifluoromethane	ND		mg/kg dry	0.0029	0.0059	1	EPA 8260C	09/14/2016 18:55	09/15/2016 03:28	SS
								Certifications: NELAC-NY10854,NJDEP			
100-41-4	Ethyl Benzene	ND		mg/kg dry	0.0029	0.0059	1	EPA 8260C	09/14/2016 18:55	09/15/2016 03:28	SS
								Certifications: CTDOH,NELAC-NY10854,NJDEP,PADEP			
87-68-3	Hexachlorobutadiene	ND		mg/kg dry	0.0029	0.0059	1	EPA 8260C	09/14/2016 18:55	09/15/2016 03:28	SS
								Certifications: NELAC-NY10854,NJDEP			
98-82-8	Isopropylbenzene	ND		mg/kg dry	0.0029	0.0059	1	EPA 8260C	09/14/2016 18:55	09/15/2016 03:28	SS
								Certifications: CTDOH,NELAC-NY10854,NJDEP			
79-20-9	Methyl acetate	ND		mg/kg dry	0.0029	0.0059	1	EPA 8260C	09/14/2016 18:55	09/15/2016 03:28	SS
								Certifications: NELAC-NY10854,NJDEP			
1634-04-4	Methyl tert-butyl ether (MTBE)	ND		mg/kg dry	0.0029	0.0059	1	EPA 8260C	09/14/2016 18:55	09/15/2016 03:28	SS
								Certifications: CTDOH,NELAC-NY10854,NJDEP			
108-87-2	Methylcyclohexane	ND		mg/kg dry	0.0029	0.0059	1	EPA 8260C	09/14/2016 18:55	09/15/2016 03:28	SS
								Certifications: NELAC-NY10854,NJDEP			
75-09-2	Methylene chloride	ND		mg/kg dry	0.0059	0.012	1	EPA 8260C	09/14/2016 18:55	09/15/2016 03:28	SS
								Certifications: CTDOH,NELAC-NY10854,NJDEP,PADEP			
104-51-8	n-Butylbenzene	ND		mg/kg dry	0.0029	0.0059	1	EPA 8260C	09/14/2016 18:55	09/15/2016 03:28	SS
								Certifications: CTDOH,NELAC-NY10854,NJDEP			
103-65-1	n-Propylbenzene	ND		mg/kg dry	0.0029	0.0059	1	EPA 8260C	09/14/2016 18:55	09/15/2016 03:28	SS
								Certifications: CTDOH,NELAC-NY10854,NJDEP			

Sample Information

Client Sample ID: SB-05-14.5-15.0' **York Sample ID:** 16I0323-07

York Project (SDG) No.	Client Project ID	Matrix	Collection Date/Time	Date Received
16I0323	BEGS or OEGS (15-008-0265)	Soil	September 7, 2016 11:45 am	09/09/2016

Volatile Organics, 8260 - Comprehensive

Log-in Notes: VOA-CONT **Sample Notes:** VOA-CONT

Sample Prepared by Method: EPA 5035A

CAS No.	Parameter	Result	Flag	Units	Reported to LOD/MDL	LOQ	Dilution	Reference Method	Date/Time Prepared	Date/Time Analyzed	Analyst
95-47-6	o-Xylene	ND		mg/kg dry	0.0029	0.0059	1	EPA 8260C Certifications: CTDOH,NELAC-NY10854	09/14/2016 18:55	09/15/2016 03:28	SS
179601-23-1	p- & m- Xylenes	ND		mg/kg dry	0.0059	0.012	1	EPA 8260C Certifications: CTDOH,NELAC-NY10854	09/14/2016 18:55	09/15/2016 03:28	SS
99-87-6	p-Isopropyltoluene	ND		mg/kg dry	0.0029	0.0059	1	EPA 8260C Certifications: CTDOH,NELAC-NY10854,NJDEP	09/14/2016 18:55	09/15/2016 03:28	SS
135-98-8	sec-Butylbenzene	ND		mg/kg dry	0.0029	0.0059	1	EPA 8260C Certifications: CTDOH,NELAC-NY10854,NJDEP	09/14/2016 18:55	09/15/2016 03:28	SS
100-42-5	Styrene	ND		mg/kg dry	0.0029	0.0059	1	EPA 8260C Certifications: CTDOH,NELAC-NY10854,NJDEP	09/14/2016 18:55	09/15/2016 03:28	SS
75-65-0	tert-Butyl alcohol (TBA)	ND		mg/kg dry	0.0029	0.0059	1	EPA 8260C Certifications: NELAC-NY10854,NJDEP	09/14/2016 18:55	09/15/2016 03:28	SS
98-06-6	tert-Butylbenzene	ND		mg/kg dry	0.0029	0.0059	1	EPA 8260C Certifications: CTDOH,NELAC-NY10854,NJDEP	09/14/2016 18:55	09/15/2016 03:28	SS
[illegible]18-4	Tetrachloroethylene	ND		mg/kg dry	0.0029	0.0059	1	EPA 8260C Certifications: CTDOH,NELAC-NY10854,NJDEP,PADEP	09/14/2016 18:55	09/15/2016 03:28	SS
108-88-3	Toluene	ND		mg/kg dry	0.0029	0.0059	1	EPA 8260C Certifications: CTDOH,NELAC-NY10854,NJDEP,PADEP	09/14/2016 18:55	09/15/2016 03:28	SS
156-60-5	trans-1,2-Dichloroethylene	ND		mg/kg dry	0.0029	0.0059	1	EPA 8260C Certifications: CTDOH,NELAC-NY10854,NJDEP	09/14/2016 18:55	09/15/2016 03:28	SS
10061-02-6	trans-1,3-Dichloropropylene	ND		mg/kg dry	0.0029	0.0059	1	EPA 8260C Certifications: CTDOH,NELAC-NY10854,NJDEP,PADEP	09/14/2016 18:55	09/15/2016 03:28	SS
79-01-6	Trichloroethylene	ND		mg/kg dry	0.0029	0.0059	1	EPA 8260C Certifications: CTDOH,NELAC-NY10854,NJDEP,PADEP	09/14/2016 18:55	09/15/2016 03:28	SS
75-69-4	Trichlorofluoromethane	ND		mg/kg dry	0.0029	0.0059	1	EPA 8260C Certifications: CTDOH,NELAC-NY10854,NJDEP,PADEP	09/14/2016 18:55	09/15/2016 03:28	SS
75-01-4	Vinyl Chloride	ND		mg/kg dry	0.0029	0.0059	1	EPA 8260C Certifications: CTDOH,NELAC-NY10854,NJDEP,PADEP	09/14/2016 18:55	09/15/2016 03:28	SS
1330-20-7	Xylenes, Total	ND		mg/kg dry	0.0088	0.018	1	EPA 8260C Certifications: CTDOH,NELAC-NY10854,NJDEP,PADEP	09/14/2016 18:55	09/15/2016 03:28	SS

	Surrogate Recoveries	Result	Acceptance Range
17060-07-0	*Surrogate: 1,2-Dichloroethane-d4*	*89.8 %*	*77-125*
2037-26-5	*Surrogate: Toluene-d8*	*99.7 %*	*85-120*
460-00-4	*Surrogate: p-Bromofluorobenzene*	*100 %*	*76-130*

Total Solids

Log-in Notes: VOA-CONT **Sample Notes:**

Sample Prepared by Method: % Solids Prep

CAS No.	Parameter	Result	Flag	Units	LOD/MDL	Reported to LOQ	Dilution	Reference Method	Date/Time Prepared	Date/Time Analyzed	Analyst
solids	*** % Solids**	**85.0**		%	0.100	0.100	1	SM 2540G Certifications: CTDOH	09/15/2016 08:08	09/15/2016 14:32	LAB

Sample Information

Client Sample ID: SB-05-Comp

York Sample ID: 16I0323-08

York Project (SDG) No.	Client Project ID	Matrix	Collection Date/Time	Date Received
16I0323	BEGS or OEGS (15-008-0265)	Soil	September 7, 2016 12:00 pm	09/09/2016

Semi-Volatiles, PAH Target List

Log-in Notes: VOA-CONT **Sample Notes:**

Sample Prepared by Method: EPA 3550C

CAS No.	Parameter	Result	Flag	Units	Reported to LOD/MDL	LOQ	Dilution	Reference Method	Date/Time Prepared	Date/Time Analyzed	Analyst
91-57-6	2-Methylnaphthalene	ND		mg/kg dry	0.0482	0.0962	2	EPA 8270D Certifications: CTDOH,NELAC-NY10854,NJDEP,PADEP	09/15/2016 08:12	09/16/2016 12:12	KH
83-32-9	Acenaphthene	ND		mg/kg dry	0.0482	0.0962	2	EPA 8270D Certifications: CTDOH,NELAC-NY10854,NJDEP,PADEP	09/15/2016 08:12	09/16/2016 12:12	KH
208-96-8	Acenaphthylene	ND		mg/kg dry	0.0482	0.0962	2	EPA 8270D Certifications: CTDOH,NELAC-NY10854,NJDEP,PADEP	09/15/2016 08:12	09/16/2016 12:12	KH
120-12-7	Anthracene	ND		mg/kg dry	0.0482	0.0962	2	EPA 8270D Certifications: CTDOH,NELAC-NY10854,NJDEP,PADEP	09/15/2016 08:12	09/16/2016 12:12	KH
56-55-3	**Benzo(a)anthracene**	**0.105**		mg/kg dry	0.0482	0.0962	2	EPA 8270D Certifications: CTDOH,NELAC-NY10854,NJDEP,PADEP	09/15/2016 08:12	09/16/2016 12:12	KH
50-32-8	Benzo(a)pyrene	ND		mg/kg dry	0.0482	0.0962	2	EPA 8270D Certifications: CTDOH,NELAC-NY10854,NJDEP,PADEP	09/15/2016 08:12	09/16/2016 12:12	KH
205-99-2	Benzo(b)fluoranthene	ND		mg/kg dry	0.0482	0.0962	2	EPA 8270D Certifications: CTDOH,NELAC-NY10854,NJDEP,PADEP	09/15/2016 08:12	09/16/2016 12:12	KH
191-24-2	Benzo(g,h,i)perylene	ND		mg/kg dry	0.0482	0.0962	2	EPA 8270D Certifications: CTDOH,NELAC-NY10854,NJDEP,PADEP	09/15/2016 08:12	09/16/2016 12:12	KH
207-08-9	**Benzo(k)fluoranthene**	**0.0723**	J	mg/kg dry	0.0482	0.0962	2	EPA 8270D Certifications: CTDOH,NELAC-NY10854,NJDEP,PADEP	09/15/2016 08:12	09/16/2016 12:12	KH
218-01-9	**Chrysene**	**0.114**		mg/kg dry	0.0482	0.0962	2	EPA 8270D Certifications: CTDOH,NELAC-NY10854,NJDEP,PADEP	09/15/2016 08:12	09/16/2016 12:12	KH
53-70-3	Dibenzo(a,h)anthracene	ND		mg/kg dry	0.0482	0.0962	2	EPA 8270D Certifications: CTDOH,NELAC-NY10854,NJDEP,PADEP	09/15/2016 08:12	09/16/2016 12:12	KH
206-44-0	**Fluoranthene**	**0.243**		mg/kg dry	0.0482	0.0962	2	EPA 8270D Certifications: CTDOH,NELAC-NY10854,NJDEP,PADEP	09/15/2016 08:12	09/16/2016 12:12	KH
86-73-7	Fluorene	ND		mg/kg dry	0.0482	0.0962	2	EPA 8270D Certifications: NELAC-NY10854,NJDEP,PADEP	09/15/2016 08:12	09/16/2016 12:12	KH
193-39-5	Indeno(1,2,3-cd)pyrene	ND		mg/kg dry	0.0482	0.0962	2	EPA 8270D Certifications: CTDOH,NELAC-NY10854,NJDEP,PADEP	09/15/2016 08:12	09/16/2016 12:12	KH
91-20-3	Naphthalene	ND		mg/kg dry	0.0482	0.0962	2	EPA 8270D Certifications: CTDOH,NELAC-NY10854,NJDEP,PADEP	09/15/2016 08:12	09/16/2016 12:12	KH
85-01-8	**Phenanthrene**	**0.116**		mg/kg dry	0.0482	0.0962	2	EPA 8270D Certifications: CTDOH,NELAC-NY10854,NJDEP,PADEP	09/15/2016 08:12	09/16/2016 12:12	KH
129-00-0	**Pyrene**	**0.255**		mg/kg dry	0.0482	0.0962	2	EPA 8270D Certifications: CTDOH,NELAC-NY10854,NJDEP,PADEP	09/15/2016 08:12	09/16/2016 12:12	KH

	Surrogate Recoveries	Result	Acceptance Range
4165-60-0	*Surrogate: Nitrobenzene-d5*	*38.6 %*	*22-108*
321-60-8	*Surrogate: 2-Fluorobiphenyl*	*56.6 %*	*21-113*
1718-51-0	*Surrogate: Terphenyl-d14*	*48.0 %*	*24-116*

Polychlorinated Biphenyls (PCB)

Log-in Notes: VOA-CONT **Sample Notes:**

Sample Prepared by Method: EPA 3550C

CAS No.	Parameter	Result	Flag	Units	LOD/MDL	Reported to LOQ	Dilution	Reference Method	Date/Time Prepared	Date/Time Analyzed	Analyst

Sample Information

Client Sample ID: SB-05-Comp

York Sample ID: 16I0323-08

York Project (SDG) No.	Client Project ID	Matrix	Collection Date/Time	Date Received
16I0323	BEGS or OEGS (15-008-0265)	Soil	September 7, 2016 12:00 pm	09/09/2016

Polychlorinated Biphenyls (PCB)

Log-in Notes: VOA-CONT **Sample Notes:**

Sample Prepared by Method: EPA 3550C

CAS No.	Parameter	Result	Flag	Units	LOD/MDL	Reported to LOQ	Dilution	Reference Method	Date/Time Prepared	Date/Time Analyzed	Analyst
12674-11-2	Aroclor 1016	ND		mg/kg dry	0.0192	0.0192	1	EPA 8082A Certifications: NELAC-NY10854,CTDOH,NJDEP,PADEP	09/13/2016 09:10	09/13/2016 23:34	AMC
11104-28-2	Aroclor 1221	ND		mg/kg dry	0.0192	0.0192	1	EPA 8082A Certifications: NELAC-NY10854,CTDOH,NJDEP,PADEP	09/13/2016 09:10	09/13/2016 23:34	AMC
11141-16-5	Aroclor 1232	ND		mg/kg dry	0.0192	0.0192	1	EPA 8082A Certifications: NELAC-NY10854,CTDOH,NJDEP,PADEP	09/13/2016 09:10	09/13/2016 23:34	AMC
53469-21-9	Aroclor 1242	ND		mg/kg dry	0.0192	0.0192	1	EPA 8082A Certifications: NELAC-NY10854,CTDOH,NJDEP,PADEP	09/13/2016 09:10	09/13/2016 23:34	AMC
12672-29-6	Aroclor 1248	ND		mg/kg dry	0.0192	0.0192	1	EPA 8082A Certifications: NELAC-NY10854,CTDOH,NJDEP,PADEP	09/13/2016 09:10	09/13/2016 23:34	AMC
11097-69-1	Aroclor 1254	ND		mg/kg dry	0.0192	0.0192	1	EPA 8082A Certifications: NELAC-NY10854,CTDOH,NJDEP,PADEP	09/13/2016 09:10	09/13/2016 23:34	AMC
[illegible]096-82-5	Aroclor 1260	ND		mg/kg dry	0.0192	0.0192	1	EPA 8082A Certifications: NELAC-NY10854,CTDOH,NJDEP,PADEP	09/13/2016 09:10	09/13/2016 23:34	AMC
1336-36-3	* Total PCBs	ND		mg/kg dry	0.0192	0.0192	1	EPA 8082A Certifications:	09/13/2016 09:10	09/13/2016 23:34	AMC

	Surrogate Recoveries	Result	Acceptance Range
877-09-8	*Surrogate: Tetrachloro-m-xylene*	*47.5 %*	*30-140*
2051-24-3	*Surrogate: Decachlorobiphenyl*	*46.0 %*	*30-140*

Total Petroleum Hydrocarbons-DRO (C10-C28)

Log-in Notes: VOA-CONT **Sample Notes:**

Sample Prepared by Method: EPA 3550C

CAS No.	Parameter	Result	Flag	Units	LOD/MDL	Reported to LOQ	Dilution	Reference Method	Date/Time Prepared	Date/Time Analyzed	Analyst
	Total Petroleum Hydrocarbons-DRO	**18.8**		mg/kg dry	3.92	11.5	1	EPA 8015D Certifications: NELAC-NY10854,NJDEP,PADEP	09/15/2016 07:34	09/15/2016 19:55	AMC

	Surrogate Recoveries	Result	Acceptance Range
638-68-6	*Surrogate: Triacontane*	*82.0 %*	*30-150*

Total Petroleum Hydrocarbons-GRO (C5-C10)

Log-in Notes: VOA-CONT **Sample Notes:**

Sample Prepared by Method: EPA 5035A

CAS No.	Parameter	Result	Flag	Units	LOD/MDL	Reported to LOQ	Dilution	Reference Method	Date/Time Prepared	Date/Time Analyzed	Analyst
	Total Petroleum Hydrocarbons-GRO	ND		mg/kg dry	46.1	92.3	100	EPA 8015D Certifications: NELAC-NY10854,NJDEP,PADEP	09/14/2016 08:58	09/14/2016 19:25	OW

	Surrogate Recoveries	Result	Acceptance Range
460-00-4	*Surrogate: p-Bromofluorobenzene*	*90.7 %*	*70-130*

[illegible]tals, TCLP RCRA

Log-in Notes: VOA-CONT **Sample Notes:**

Sample Information

Client Sample ID: **SB-05-Comp** **York Sample ID:** **16I0323-08**

York Project (SDG) No.	Client Project ID	Matrix	Collection Date/Time	Date Received
16I0323	BEGS or OEGS (15-008-0265)	Soil	September 7, 2016 12:00 pm	09/09/2016

Sample Prepared by Method: EPA 3015A/1311

CAS No.	Parameter	Result	Flag	Units	LOD/MDL	Reported to LOQ	Dilution	Reference Method	Date/Time Prepared	Date/Time Analyzed	Analyst
7440-38-2	Arsenic	ND		mg/L	0.004	0.004	1	EPA 6010C/1311	09/13/2016 12:22	09/14/2016 06:11	KV
								Certifications: CTDOH,NELAC-NY10854,NJDEP,PADEP			
7440-39-3	**Barium**	**0.537**		mg/L	0.011	0.011	1	EPA 6010C/1311	09/13/2016 12:22	09/14/2016 06:11	KV
								Certifications: CTDOH,NELAC-NY10854,NJDEP,PADEP			
7440-43-9	Cadmium	ND		mg/L	0.003	0.003	1	EPA 6010C/1311	09/13/2016 12:22	09/14/2016 06:11	KV
								Certifications: CTDOH,NELAC-NY10854,NJDEP,PADEP			
7440-47-3	Chromium	ND		mg/L	0.006	0.006	1	EPA 6010C/1311	09/13/2016 12:22	09/14/2016 06:11	KV
								Certifications: CTDOH,NELAC-NY10854,NJDEP,PADEP			
7439-92-1	**Lead**	**0.047**		mg/L	0.003	0.003	1	EPA 6010C/1311	09/13/2016 12:22	09/14/2016 06:11	KV
								Certifications: CTDOH,NELAC-NY10854,NJDEP,PADEP			
7782-49-2	**Selenium**	**0.019**	M-SeT C, B	mg/L	0.011	0.011	1	EPA 6010C/1311	09/13/2016 12:22	09/14/2016 06:11	KV
								Certifications: CTDOH,NELAC-NY10854,NJDEP,PADEP			
7440-22-4	Silver	ND		mg/L	0.006	0.006	1	EPA 6010C/1311	09/13/2016 12:22	09/14/2016 06:11	KV
								Certifications: CTDOH,NELAC-NY10854,NJDEP,PADEP			

Mercury TCLP by 7473

Log-in Notes: VOA-CONT **Sample Notes:**

Sample Prepared by Method: EPA 7473 water

CAS No.	Parameter	Result	Flag	Units	LOD/MDL	Reported to LOQ	Dilution	Reference Method	Date/Time Prepared	Date/Time Analyzed	Analyst
7439-97-6	Mercury	ND		mg/L	0.0000390	0.000200	1	EPA 7473/1311	09/13/2016 12:33	09/14/2016 06:59	ALD
								Certifications: CTDOH,NJDEP,PADEP,NELAC-NY10854			

Ignitability

Log-in Notes: VOA-CONT **Sample Notes:**

Sample Prepared by Method: Analysis Preparation

CAS No.	Parameter	Result	Flag	Units	LOD/MDL	Reported to LOQ	Dilution	Reference Method	Date/Time Prepared	Date/Time Analyzed	Analyst
	* Ignitability	Non-Ignit.		-	1	1	1	EPA 1030P	09/13/2016 14:36	09/13/2016 14:58	AD
								Certifications: CTDOH,PADEP			

Total Solids

Log-in Notes: VOA-CONT **Sample Notes:**

Sample Prepared by Method: % Solids Prep

CAS No.	Parameter	Result	Flag	Units	LOD/MDL	Reported to LOQ	Dilution	Reference Method	Date/Time Prepared	Date/Time Analyzed	Analyst
solids	*** % Solids**	**86.7**		%	0.100	0.100	1	SM 2540G	09/15/2016 08:08	09/15/2016 14:32	LAB
								Certifications: CTDOH			

Corrosivity

Log-in Notes: VOA-CONT **Sample Notes:**

Sample Prepared by Method: Analysis Preparation

CAS No.	Parameter	Result	Flag	Units	LOD/MDL	Reported to LOQ	Dilution	Reference Method	Date/Time Prepared	Date/Time Analyzed	Analyst
	pH	**8.06**	HT-pH	pH units		0.500	1	EPA 9045D	09/13/2016 11:58	09/13/2016 14:32	LAB
								Certifications: NELAC-NY10854,CTDOH,PADEP			

Reactivity-Cyanide

Log-in Notes: VOA-CONT **Sample Notes:**

Sample Information

Client Sample ID: SB-05-Comp **York Sample ID:** 16I0323-08

York Project (SDG) No.	Client Project ID	Matrix	Collection Date/Time	Date Received
16I0323	BEGS or OEGS (15-008-0265)	Soil	September 7, 2016 12:00 pm	09/09/2016

Sample Prepared by Method: Analysis Preparation

CAS No.	Parameter	Result	Flag	Units	LOD/MDL	Reported to LOQ	Dilution	Reference Method	Date/Time Prepared	Date/Time Analyzed	Analyst
	* Reactivity - Cyanide	ND		mg/kg	0.250	0.250	1	EPA SW-846 Ch.7.3.3	09/14/2016 10:46	09/14/2016 16:33	AD
								Certifications: CTDOH,PADEP			

Reactivity-Sulfide **Log-in Notes:** VOA-CONT **Sample Notes:**

Sample Prepared by Method: Analysis Preparation

CAS No.	Parameter	Result	Flag	Units	LOD/MDL	Reported to LOQ	Dilution	Reference Method	Date/Time Prepared	Date/Time Analyzed	Analyst
	*** Reactivity - Sulfide**	**40.0**		mg/kg	15.0	15.0	1	EPA SW-846 Ch.7.3.4	09/14/2016 10:47	09/14/2016 16:30	AD
								Certifications: CTDOH,PADEP			

TCLP Extraction for METALS EPA 1311 **Log-in Notes:** VOA-CONT **Sample Notes:**

Sample Prepared by Method: EPA SW 846-1311 TCLP ext. for metals

CAS No.	Parameter	Result	Flag	Units	LOD/MDL	Reported to LOQ	Dilution	Reference Method	Date/Time Prepared	Date/Time Analyzed	Analyst
	TCLP Extraction	Completed		N/A	1.00	1.00	1	EPA 1311	09/12/2016 18:51	09/13/2016 14:06	TJM
								Certifications: NELAC-NY10854,CTDOH,NJDEP,PADEP			

Sample Information

Client Sample ID: SB-17-17.5-18.0' **York Sample ID:** 16I0323-09

York Project (SDG) No.	Client Project ID	Matrix	Collection Date/Time	Date Received
16I0323	BEGS or OEGS (15-008-0265)	Soil	September 7, 2016 2:30 pm	09/09/2016

Volatile Organics, 8260 - Comprehensive **Log-in Notes:** VOA-CONT **Sample Notes:** **VOA-CONT**

Sample Prepared by Method: EPA 5035A

CAS No.	Parameter	Result	Flag	Units	LOD/MDL	Reported to LOQ	Dilution	Reference Method	Date/Time Prepared	Date/Time Analyzed	Analyst
630-20-6	1,1,1,2-Tetrachloroethane	ND		mg/kg dry	0.0028	0.0055	1	EPA 8260C	09/14/2016 18:55	09/15/2016 04:02	SS
								Certifications: CTDOH,NELAC-NY10854,NJDEP			
71-55-6	1,1,1-Trichloroethane	ND		mg/kg dry	0.0028	0.0055	1	EPA 8260C	09/14/2016 18:55	09/15/2016 04:02	SS
								Certifications: CTDOH,NELAC-NY10854,NJDEP,PADEP			
79-34-5	1,1,2,2-Tetrachloroethane	ND		mg/kg dry	0.0028	0.0055	1	EPA 8260C	09/14/2016 18:55	09/15/2016 04:02	SS
								Certifications: CTDOH,NELAC-NY10854,NJDEP,PADEP			
76-13-1	1,1,2-Trichloro-1,2,2-trifluoroethane (Freon 113)	ND		mg/kg dry	0.0028	0.0055	1	EPA 8260C	09/14/2016 18:55	09/15/2016 04:02	SS
								Certifications: CTDOH,NELAC-NY10854,NJDEP			
79-00-5	1,1,2-Trichloroethane	ND		mg/kg dry	0.0028	0.0055	1	EPA 8260C	09/14/2016 18:55	09/15/2016 04:02	SS
								Certifications: CTDOH,NELAC-NY10854,NJDEP,PADEP			
75-34-3	1,1-Dichloroethane	ND		mg/kg dry	0.0028	0.0055	1	EPA 8260C	09/14/2016 18:55	09/15/2016 04:02	SS
								Certifications: CTDOH,NELAC-NY10854,NJDEP,PADEP			
75-35-4	1,1-Dichloroethylene	ND		mg/kg dry	0.0028	0.0055	1	EPA 8260C	09/14/2016 18:55	09/15/2016 04:02	SS
								Certifications: CTDOH,NELAC-NY10854,NJDEP,PADEP			
[illegible]-6	1,2,3-Trichlorobenzene	ND		mg/kg dry	0.0028	0.0055	1	EPA 8260C	09/14/2016 18:55	09/15/2016 04:02	SS
								Certifications: NELAC-NY10854,NJDEP			

Sample Information

Client Sample ID: SB-17-17.5-18.0' **York Sample ID:** 16I0323-09

York Project (SDG) No.	Client Project ID	Matrix	Collection Date/Time	Date Received
16I0323	BEGS or OEGS (15-008-0265)	Soil	September 7, 2016 2:30 pm	09/09/2016

Volatile Organics, 8260 - Comprehensive

Log-in Notes: VOA-CONT **Sample Notes:** VOA-CONT

Sample Prepared by Method: EPA 5035A

CAS No.	Parameter	Result	Flag	Units	Reported to LOD/MDL	LOQ	Dilution	Reference Method	Date/Time Prepared	Date/Time Analyzed	Analyst
96-18-4	1,2,3-Trichloropropane	ND		mg/kg dry	0.0028	0.0055	1	EPA 8260C Certifications: NELAC-NY10854,NJDEP	09/14/2016 18:55	09/15/2016 04:02	SS
120-82-1	1,2,4-Trichlorobenzene	ND		mg/kg dry	0.0028	0.0055	1	EPA 8260C Certifications: NELAC-NY10854,NJDEP	09/14/2016 18:55	09/15/2016 04:02	SS
95-63-6	1,2,4-Trimethylbenzene	ND		mg/kg dry	0.0028	0.0055	1	EPA 8260C Certifications: CTDOH,NELAC-NY10854,NJDEP	09/14/2016 18:55	09/15/2016 04:02	SS
96-12-8	1,2-Dibromo-3-chloropropane	ND		mg/kg dry	0.0028	0.0055	1	EPA 8260C Certifications: CTDOH,NELAC-NY10854,NJDEP	09/14/2016 18:55	09/15/2016 04:02	SS
106-93-4	1,2-Dibromoethane	ND		mg/kg dry	0.0028	0.0055	1	EPA 8260C Certifications: CTDOH,NELAC-NY10854,NJDEP	09/14/2016 18:55	09/15/2016 04:02	SS
95-50-1	1,2-Dichlorobenzene	ND		mg/kg dry	0.0028	0.0055	1	EPA 8260C Certifications: CTDOH,NELAC-NY10854,NJDEP,PADEP	09/14/2016 18:55	09/15/2016 04:02	SS
107-06-2	1,2-Dichloroethane	ND		mg/kg dry	0.0028	0.0055	1	EPA 8260C Certifications: CTDOH,NELAC-NY10854,NJDEP,PADEP	09/14/2016 18:55	09/15/2016 04:02	SS
78-87-5	1,2-Dichloropropane	ND		mg/kg dry	0.0028	0.0055	1	EPA 8260C Certifications: CTDOH,NELAC-NY10854,NJDEP	09/14/2016 18:55	09/15/2016 04:02	SS
108-67-8	1,3,5-Trimethylbenzene	ND		mg/kg dry	0.0028	0.0055	1	EPA 8260C Certifications: CTDOH,NELAC-NY10854,NJDEP	09/14/2016 18:55	09/15/2016 04:02	SS
541-73-1	1,3-Dichlorobenzene	ND		mg/kg dry	0.0028	0.0055	1	EPA 8260C Certifications: CTDOH,NELAC-NY10854,NJDEP,PADEP	09/14/2016 18:55	09/15/2016 04:02	SS
106-46-7	1,4-Dichlorobenzene	ND		mg/kg dry	0.0028	0.0055	1	EPA 8260C Certifications: CTDOH,NELAC-NY10854,NJDEP,PADEP	09/14/2016 18:55	09/15/2016 04:02	SS
123-91-1	1,4-Dioxane	ND		mg/kg dry	0.055	0.11	1	EPA 8260C Certifications: NELAC-NY10854,NJDEP	09/14/2016 18:55	09/15/2016 04:02	SS
78-93-3	2-Butanone	ND		mg/kg dry	0.0028	0.0055	1	EPA 8260C Certifications: CTDOH,NELAC-NY10854,NJDEP	09/14/2016 18:55	09/15/2016 04:02	SS
591-78-6	2-Hexanone	ND		mg/kg dry	0.0028	0.0055	1	EPA 8260C Certifications: CTDOH,NELAC-NY10854,NJDEP	09/14/2016 18:55	09/15/2016 04:02	SS
108-10-1	4-Methyl-2-pentanone	ND		mg/kg dry	0.0028	0.0055	1	EPA 8260C Certifications: CTDOH,NELAC-NY10854,NJDEP	09/14/2016 18:55	09/15/2016 04:02	SS
67-64-1	**Acetone**	**0.0092**	J	mg/kg dry	0.0055	0.011	1	EPA 8260C Certifications: CTDOH,NELAC-NY10854,NJDEP	09/14/2016 18:55	09/15/2016 04:02	SS
107-02-8	Acrolein	ND		mg/kg dry	0.0055	0.011	1	EPA 8260C Certifications: CTDOH,NELAC-NY10854,NJDEP	09/14/2016 18:55	09/15/2016 04:02	SS
107-13-1	Acrylonitrile	ND		mg/kg dry	0.0028	0.0055	1	EPA 8260C Certifications: CTDOH,NELAC-NY10854,NJDEP	09/14/2016 18:55	09/15/2016 04:02	SS
71-43-2	Benzene	ND		mg/kg dry	0.0028	0.0055	1	EPA 8260C Certifications: CTDOH,NELAC-NY10854,NJDEP,PADEP	09/14/2016 18:55	09/15/2016 04:02	SS
74-97-5	Bromochloromethane	ND		mg/kg dry	0.0028	0.0055	1	EPA 8260C Certifications: NELAC-NY10854,NJDEP	09/14/2016 18:55	09/15/2016 04:02	SS
75-27-4	Bromodichloromethane	ND		mg/kg dry	0.0028	0.0055	1	EPA 8260C Certifications: CTDOH,NELAC-NY10854,NJDEP,PADEP	09/14/2016 18:55	09/15/2016 04:02	SS
75-25-2	Bromoform	ND		mg/kg dry	0.0028	0.0055	1	EPA 8260C Certifications: CTDOH,NELAC-NY10854,NJDEP,PADEP	09/14/2016 18:55	09/15/2016 04:02	SS

Sample Information

Client Sample ID: SB-17-17.5-18.0' **York Sample ID:** 16I0323-09

York Project (SDG) No.	Client Project ID	Matrix	Collection Date/Time	Date Received
16I0323	BEGS or OEGS (15-008-0265)	Soil	September 7, 2016 2:30 pm	09/09/2016

Volatile Organics, 8260 - Comprehensive

Log-in Notes: VOA-CONT **Sample Notes:** VOA-CONT

Sample Prepared by Method: EPA 5035A

CAS No.	Parameter	Result	Flag	Units	Reported to LOD/MDL	LOQ	Dilution	Reference Method	Date/Time Prepared	Date/Time Analyzed	Analyst
74-83-9	Bromomethane	ND		mg/kg dry	0.0028	0.0055	1	EPA 8260C Certifications: CTDOH,NELAC-NY10854,NJDEP,PADEP	09/14/2016 18:55	09/15/2016 04:02	SS
75-15-0	Carbon disulfide	ND		mg/kg dry	0.0028	0.0055	1	EPA 8260C Certifications: CTDOH,NELAC-NY10854,NJDEP	09/14/2016 18:55	09/15/2016 04:02	SS
56-23-5	Carbon tetrachloride	ND		mg/kg dry	0.0028	0.0055	1	EPA 8260C Certifications: CTDOH,NELAC-NY10854,NJDEP,PADEP	09/14/2016 18:55	09/15/2016 04:02	SS
108-90-7	Chlorobenzene	ND		mg/kg dry	0.0028	0.0055	1	EPA 8260C Certifications: CTDOH,NELAC-NY10854,NJDEP,PADEP	09/14/2016 18:55	09/15/2016 04:02	SS
75-00-3	Chloroethane	ND		mg/kg dry	0.0028	0.0055	1	EPA 8260C Certifications: CTDOH,NELAC-NY10854,NJDEP,PADEP	09/14/2016 18:55	09/15/2016 04:02	SS
67-66-3	Chloroform	ND		mg/kg dry	0.0028	0.0055	1	EPA 8260C Certifications: CTDOH,NELAC-NY10854,NJDEP,PADEP	09/14/2016 18:55	09/15/2016 04:02	SS
74-87-3	Chloromethane	ND		mg/kg dry	0.0028	0.0055	1	EPA 8260C Certifications: CTDOH,NELAC-NY10854,NJDEP,PADEP	09/14/2016 18:55	09/15/2016 04:02	SS
[illegible]9-2	cis-1,2-Dichloroethylene	ND		mg/kg dry	0.0028	0.0055	1	EPA 8260C Certifications: CTDOH,NELAC-NY10854,NJDEP	09/14/2016 18:55	09/15/2016 04:02	SS
10061-01-5	cis-1,3-Dichloropropylene	ND		mg/kg dry	0.0028	0.0055	1	EPA 8260C Certifications: CTDOH,NELAC-NY10854,NJDEP,PADEP	09/14/2016 18:55	09/15/2016 04:02	SS
110-82-7	Cyclohexane	ND		mg/kg dry	0.0028	0.0055	1	EPA 8260C Certifications: NELAC-NY10854,NJDEP	09/14/2016 18:55	09/15/2016 04:02	SS
124-48-1	Dibromochloromethane	ND		mg/kg dry	0.0028	0.0055	1	EPA 8260C Certifications: NELAC-NY10854,NJDEP,PADEP	09/14/2016 18:55	09/15/2016 04:02	SS
74-95-3	Dibromomethane	ND		mg/kg dry	0.0028	0.0055	1	EPA 8260C Certifications: NELAC-NY10854,NJDEP	09/14/2016 18:55	09/15/2016 04:02	SS
75-71-8	Dichlorodifluoromethane	ND		mg/kg dry	0.0028	0.0055	1	EPA 8260C Certifications: NELAC-NY10854,NJDEP	09/14/2016 18:55	09/15/2016 04:02	SS
100-41-4	Ethyl Benzene	ND		mg/kg dry	0.0028	0.0055	1	EPA 8260C Certifications: CTDOH,NELAC-NY10854,NJDEP,PADEP	09/14/2016 18:55	09/15/2016 04:02	SS
87-68-3	Hexachlorobutadiene	ND		mg/kg dry	0.0028	0.0055	1	EPA 8260C Certifications: NELAC-NY10854,NJDEP	09/14/2016 18:55	09/15/2016 04:02	SS
98-82-8	Isopropylbenzene	ND		mg/kg dry	0.0028	0.0055	1	EPA 8260C Certifications: CTDOH,NELAC-NY10854,NJDEP	09/14/2016 18:55	09/15/2016 04:02	SS
79-20-9	Methyl acetate	ND		mg/kg dry	0.0028	0.0055	1	EPA 8260C Certifications: NELAC-NY10854,NJDEP	09/14/2016 18:55	09/15/2016 04:02	SS
1634-04-4	Methyl tert-butyl ether (MTBE)	ND		mg/kg dry	0.0028	0.0055	1	EPA 8260C Certifications: CTDOH,NELAC-NY10854,NJDEP	09/14/2016 18:55	09/15/2016 04:02	SS
108-87-2	Methylcyclohexane	ND		mg/kg dry	0.0028	0.0055	1	EPA 8260C Certifications: NELAC-NY10854,NJDEP	09/14/2016 18:55	09/15/2016 04:02	SS
75-09-2	Methylene chloride	ND		mg/kg dry	0.0055	0.011	1	EPA 8260C Certifications: CTDOH,NELAC-NY10854,NJDEP,PADEP	09/14/2016 18:55	09/15/2016 04:02	SS
104-51-8	n-Butylbenzene	ND		mg/kg dry	0.0028	0.0055	1	EPA 8260C Certifications: CTDOH,NELAC-NY10854,NJDEP	09/14/2016 18:55	09/15/2016 04:02	SS
[illegible]-1	n-Propylbenzene	ND		mg/kg dry	0.0028	0.0055	1	EPA 8260C Certifications: CTDOH,NELAC-NY10854,NJDEP	09/14/2016 18:55	09/15/2016 04:02	SS

Sample Information

Client Sample ID: SB-17-17.5-18.0' **York Sample ID:** 16I0323-09

York Project (SDG) No.	Client Project ID	Matrix	Collection Date/Time	Date Received
16I0323	BEGS or OEGS (15-008-0265)	Soil	September 7, 2016 2:30 pm	09/09/2016

Volatile Organics, 8260 - Comprehensive

Log-in Notes: VOA-CONT **Sample Notes:** VOA-CONT

Sample Prepared by Method: EPA 5035A

CAS No.	Parameter	Result	Flag	Units	Reported to LOD/MDL	LOQ	Dilution	Reference Method	Date/Time Prepared	Date/Time Analyzed	Analyst
95-47-6	o-Xylene	ND		mg/kg dry	0.0028	0.0055	1	EPA 8260C Certifications: CTDOH,NELAC-NY10854	09/14/2016 18:55	09/15/2016 04:02	SS
179601-23-1	p- & m- Xylenes	ND		mg/kg dry	0.0055	0.011	1	EPA 8260C Certifications: CTDOH,NELAC-NY10854	09/14/2016 18:55	09/15/2016 04:02	SS
99-87-6	p-Isopropyltoluene	ND		mg/kg dry	0.0028	0.0055	1	EPA 8260C Certifications: CTDOH,NELAC-NY10854,NJDEP	09/14/2016 18:55	09/15/2016 04:02	SS
135-98-8	sec-Butylbenzene	ND		mg/kg dry	0.0028	0.0055	1	EPA 8260C Certifications: CTDOH,NELAC-NY10854,NJDEP	09/14/2016 18:55	09/15/2016 04:02	SS
100-42-5	Styrene	ND		mg/kg dry	0.0028	0.0055	1	EPA 8260C Certifications: CTDOH,NELAC-NY10854,NJDEP	09/14/2016 18:55	09/15/2016 04:02	SS
75-65-0	tert-Butyl alcohol (TBA)	ND		mg/kg dry	0.0028	0.0055	1	EPA 8260C Certifications: NELAC-NY10854,NJDEP	09/14/2016 18:55	09/15/2016 04:02	SS
98-06-6	tert-Butylbenzene	ND		mg/kg dry	0.0028	0.0055	1	EPA 8260C Certifications: CTDOH,NELAC-NY10854,NJDEP	09/14/2016 18:55	09/15/2016 04:02	SS
127-18-4	Tetrachloroethylene	ND		mg/kg dry	0.0028	0.0055	1	EPA 8260C Certifications: CTDOH,NELAC-NY10854,NJDEP,PADEP	09/14/2016 18:55	09/15/2016 04:02	SS
108-88-3	Toluene	ND		mg/kg dry	0.0028	0.0055	1	EPA 8260C Certifications: CTDOH,NELAC-NY10854,NJDEP,PADEP	09/14/2016 18:55	09/15/2016 04:02	SS
156-60-5	trans-1,2-Dichloroethylene	ND		mg/kg dry	0.0028	0.0055	1	EPA 8260C Certifications: CTDOH,NELAC-NY10854,NJDEP	09/14/2016 18:55	09/15/2016 04:02	SS
10061-02-6	trans-1,3-Dichloropropylene	ND		mg/kg dry	0.0028	0.0055	1	EPA 8260C Certifications: CTDOH,NELAC-NY10854,NJDEP,PADEP	09/14/2016 18:55	09/15/2016 04:02	SS
79-01-6	Trichloroethylene	ND		mg/kg dry	0.0028	0.0055	1	EPA 8260C Certifications: CTDOH,NELAC-NY10854,NJDEP,PADEP	09/14/2016 18:55	09/15/2016 04:02	SS
75-69-4	Trichlorofluoromethane	ND		mg/kg dry	0.0028	0.0055	1	EPA 8260C Certifications: CTDOH,NELAC-NY10854,NJDEP,PADEP	09/14/2016 18:55	09/15/2016 04:02	SS
75-01-4	Vinyl Chloride	ND		mg/kg dry	0.0028	0.0055	1	EPA 8260C Certifications: CTDOH,NELAC-NY10854,NJDEP,PADEP	09/14/2016 18:55	09/15/2016 04:02	SS
1330-20-7	Xylenes, Total	ND		mg/kg dry	0.0083	0.017	1	EPA 8260C Certifications: CTDOH,NELAC-NY10854,NJDEP,PADEP	09/14/2016 18:55	09/15/2016 04:02	SS

	Surrogate Recoveries	Result	Acceptance Range
17060-07-0	*Surrogate: 1,2-Dichloroethane-d4*	*94.9 %*	*77-125*
2037-26-5	*Surrogate: Toluene-d8*	*105 %*	*85-120*
460-00-4	*Surrogate: p-Bromofluorobenzene*	*99.9 %*	*76-130*

Total Solids

Log-in Notes: VOA-CONT **Sample Notes:**

Sample Prepared by Method: % Solids Prep

CAS No.	Parameter	Result	Flag	Units	LOD/MDL	Reported to LOQ	Dilution	Reference Method	Date/Time Prepared	Date/Time Analyzed	Analyst
solids	*** % Solids**	**90.5**		%	0.100	0.100	1	SM 2540G Certifications: CTDOH	09/15/2016 08:08	09/15/2016 14:32	LAB

Sample Information

Client Sample ID: SB-17-Comp

York Sample ID: 16I0323-10

York Project (SDG) No.	Client Project ID	Matrix	Collection Date/Time	Date Received
16I0323	BEGS or OEGS (15-008-0265)	Soil	September 7, 2016 2:40 pm	09/09/2016

Semi-Volatiles, PAH Target List

Log-in Notes: VOA-CONT **Sample Notes:**

Sample Prepared by Method: EPA 3550C

CAS No.	Parameter	Result	Flag	Units	Reported to LOD/MDL	LOQ	Dilution	Reference Method	Date/Time Prepared	Date/Time Analyzed	Analyst
91-57-6	2-Methylnaphthalene	ND		mg/kg dry	0.0457	0.0913	2	EPA 8270D Certifications: CTDOH,NELAC-NY10854,NJDEP,PADEP	09/15/2016 08:12	09/16/2016 12:43	KH
83-32-9	Acenaphthene	ND		mg/kg dry	0.0457	0.0913	2	EPA 8270D Certifications: CTDOH,NELAC-NY10854,NJDEP,PADEP	09/15/2016 08:12	09/16/2016 12:43	KH
208-96-8	Acenaphthylene	ND		mg/kg dry	0.0457	0.0913	2	EPA 8270D Certifications: CTDOH,NELAC-NY10854,NJDEP,PADEP	09/15/2016 08:12	09/16/2016 12:43	KH
120-12-7	Anthracene	ND		mg/kg dry	0.0457	0.0913	2	EPA 8270D Certifications: CTDOH,NELAC-NY10854,NJDEP,PADEP	09/15/2016 08:12	09/16/2016 12:43	KH
56-55-3	Benzo(a)anthracene	ND		mg/kg dry	0.0457	0.0913	2	EPA 8270D Certifications: CTDOH,NELAC-NY10854,NJDEP,PADEP	09/15/2016 08:12	09/16/2016 12:43	KH
50-32-8	Benzo(a)pyrene	ND		mg/kg dry	0.0457	0.0913	2	EPA 8270D Certifications: CTDOH,NELAC-NY10854,NJDEP,PADEP	09/15/2016 08:12	09/16/2016 12:43	KH
[illegible]-99-2	Benzo(b)fluoranthene	ND		mg/kg dry	0.0457	0.0913	2	EPA 8270D Certifications: CTDOH,NELAC-NY10854,NJDEP,PADEP	09/15/2016 08:12	09/16/2016 12:43	KH
191-24-2	Benzo(g,h,i)perylene	ND		mg/kg dry	0.0457	0.0913	2	EPA 8270D Certifications: CTDOH,NELAC-NY10854,NJDEP,PADEP	09/15/2016 08:12	09/16/2016 12:43	KH
207-08-9	Benzo(k)fluoranthene	ND		mg/kg dry	0.0457	0.0913	2	EPA 8270D Certifications: CTDOH,NELAC-NY10854,NJDEP,PADEP	09/15/2016 08:12	09/16/2016 12:43	KH
218-01-9	Chrysene	ND		mg/kg dry	0.0457	0.0913	2	EPA 8270D Certifications: CTDOH,NELAC-NY10854,NJDEP,PADEP	09/15/2016 08:12	09/16/2016 12:43	KH
53-70-3	Dibenzo(a,h)anthracene	ND		mg/kg dry	0.0457	0.0913	2	EPA 8270D Certifications: CTDOH,NELAC-NY10854,NJDEP,PADEP	09/15/2016 08:12	09/16/2016 12:43	KH
206-44-0	Fluoranthene	ND		mg/kg dry	0.0457	0.0913	2	EPA 8270D Certifications: CTDOH,NELAC-NY10854,NJDEP,PADEP	09/15/2016 08:12	09/16/2016 12:43	KH
86-73-7	Fluorene	ND		mg/kg dry	0.0457	0.0913	2	EPA 8270D Certifications: NELAC-NY10854,NJDEP,PADEP	09/15/2016 08:12	09/16/2016 12:43	KH
193-39-5	Indeno(1,2,3-cd)pyrene	ND		mg/kg dry	0.0457	0.0913	2	EPA 8270D Certifications: CTDOH,NELAC-NY10854,NJDEP,PADEP	09/15/2016 08:12	09/16/2016 12:43	KH
91-20-3	Naphthalene	ND		mg/kg dry	0.0457	0.0913	2	EPA 8270D Certifications: CTDOH,NELAC-NY10854,NJDEP,PADEP	09/15/2016 08:12	09/16/2016 12:43	KH
85-01-8	Phenanthrene	ND		mg/kg dry	0.0457	0.0913	2	EPA 8270D Certifications: CTDOH,NELAC-NY10854,NJDEP,PADEP	09/15/2016 08:12	09/16/2016 12:43	KH
129-00-0	Pyrene	ND		mg/kg dry	0.0457	0.0913	2	EPA 8270D Certifications: CTDOH,NELAC-NY10854,NJDEP,PADEP	09/15/2016 08:12	09/16/2016 12:43	KH

	Surrogate Recoveries	Result	Acceptance Range
4165-60-0	*Surrogate: Nitrobenzene-d5*	*43.9 %*	*22-108*
321-60-8	*Surrogate: 2-Fluorobiphenyl*	*60.6 %*	*21-113*
1718-51-0	*Surrogate: Terphenyl-d14*	*49.3 %*	*24-116*

[illegible]ychlorinated Biphenyls (PCB)

Log-in Notes: VOA-CONT **Sample Notes:**

Sample Information

Client Sample ID: SB-17-Comp

York Sample ID: 16I0323-10

York Project (SDG) No.	Client Project ID	Matrix	Collection Date/Time	Date Received
16I0323	BEGS or OEGS (15-008-0265)	Soil	September 7, 2016 2:40 pm	09/09/2016

Sample Prepared by Method: EPA 3550C

CAS No.	Parameter	Result	Flag	Units	LOD/MDL	Reported to LOQ	Dilution	Reference Method	Date/Time Prepared	Date/Time Analyzed	Analyst
12674-11-2	Aroclor 1016	ND		mg/kg dry	0.0182	0.0182	1	EPA 8082A	09/13/2016 09:10	09/14/2016 00:03	AMC
								Certifications: NELAC-NY10854,CTDOH,NJDEP,PADEP			
11104-28-2	Aroclor 1221	ND		mg/kg dry	0.0182	0.0182	1	EPA 8082A	09/13/2016 09:10	09/14/2016 00:03	AMC
								Certifications: NELAC-NY10854,CTDOH,NJDEP,PADEP			
11141-16-5	Aroclor 1232	ND		mg/kg dry	0.0182	0.0182	1	EPA 8082A	09/13/2016 09:10	09/14/2016 00:03	AMC
								Certifications: NELAC-NY10854,CTDOH,NJDEP,PADEP			
53469-21-9	Aroclor 1242	ND		mg/kg dry	0.0182	0.0182	1	EPA 8082A	09/13/2016 09:10	09/14/2016 00:03	AMC
								Certifications: NELAC-NY10854,CTDOH,NJDEP,PADEP			
12672-29-6	Aroclor 1248	ND		mg/kg dry	0.0182	0.0182	1	EPA 8082A	09/13/2016 09:10	09/14/2016 00:03	AMC
								Certifications: NELAC-NY10854,CTDOH,NJDEP,PADEP			
11097-69-1	Aroclor 1254	ND		mg/kg dry	0.0182	0.0182	1	EPA 8082A	09/13/2016 09:10	09/14/2016 00:03	AMC
								Certifications: NELAC-NY10854,CTDOH,NJDEP,PADEP			
11096-82-5	Aroclor 1260	ND		mg/kg dry	0.0182	0.0182	1	EPA 8082A	09/13/2016 09:10	09/14/2016 00:03	AMC
								Certifications: NELAC-NY10854,CTDOH,NJDEP,PADEP			
1336-36-3	* Total PCBs	ND		mg/kg dry	0.0182	0.0182	1	EPA 8082A	09/13/2016 09:10	09/14/2016 00:03	AMC
								Certifications:			

	Surrogate Recoveries	Result	Acceptance Range
877-09-8	*Surrogate: Tetrachloro-m-xylene*	*58.0 %*	*30-140*
2051-24-3	*Surrogate: Decachlorobiphenyl*	*49.0 %*	*30-140*

Total Petroleum Hydrocarbons-DRO (C10-C28)

Log-in Notes: VOA-CONT **Sample Notes:**

Sample Prepared by Method: EPA 3550C

CAS No.	Parameter	Result	Flag	Units	LOD/MDL	Reported to LOQ	Dilution	Reference Method	Date/Time Prepared	Date/Time Analyzed	Analyst
	Total Petroleum Hydrocarbons-DRO	ND		mg/kg dry	3.72	10.9	1	EPA 8015D	09/15/2016 07:34	09/15/2016 20:25	AMC
								Certifications: NELAC-NY10854,NJDEP,PADEP			

	Surrogate Recoveries	Result	Acceptance Range
638-68-6	*Surrogate: Triacontane*	*69.2 %*	*30-150*

Total Petroleum Hydrocarbons-GRO (C5-C10)

Log-in Notes: VOA-CONT **Sample Notes:**

Sample Prepared by Method: EPA 5035A

CAS No.	Parameter	Result	Flag	Units	LOD/MDL	Reported to LOQ	Dilution	Reference Method	Date/Time Prepared	Date/Time Analyzed	Analyst
	Total Petroleum Hydrocarbons-GRO	ND		mg/kg dry	43.8	87.6	100	EPA 8015D	09/14/2016 08:58	09/14/2016 20:03	OW
								Certifications: NELAC-NY10854,NJDEP,PADEP			

	Surrogate Recoveries	Result	Acceptance Range
460-00-4	*Surrogate: p-Bromofluorobenzene*	*89.9 %*	*70-130*

Metals, TCLP RCRA

Log-in Notes: VOA-CONT **Sample Notes:**

Sample Prepared by Method: EPA 3015A/1311

CAS No.	Parameter	Result	Flag	Units	LOD/MDL	Reported to LOQ	Dilution	Reference Method	Date/Time Prepared	Date/Time Analyzed	Analyst

Sample Information

Client Sample ID: SB-17-Comp

York Sample ID: 16I0323-10

York Project (SDG) No.	Client Project ID	Matrix	Collection Date/Time	Date Received
16I0323	BEGS or OEGS (15-008-0265)	Soil	September 7, 2016 2:40 pm	09/09/2016

Metals, TCLP RCRA

Log-in Notes: VOA-CONT **Sample Notes:**

Sample Prepared by Method: EPA 3015A/1311

CAS No.	Parameter	Result	Flag	Units	LOD/MDL	Reported to LOQ	Dilution	Reference Method	Date/Time Prepared	Date/Time Analyzed	Analyst
7440-38-2	Arsenic	ND		mg/L	0.004	0.004	1	EPA 6010C/1311 Certifications: CTDOH,NELAC-NY10854,NJDEP,PADEP	09/13/2016 12:22	09/14/2016 06:16	KV
7440-39-3	**Barium**	**0.363**		mg/L	0.011	0.011	1	EPA 6010C/1311 Certifications: CTDOH,NELAC-NY10854,NJDEP,PADEP	09/13/2016 12:22	09/14/2016 06:16	KV
7440-43-9	Cadmium	ND		mg/L	0.003	0.003	1	EPA 6010C/1311 Certifications: CTDOH,NELAC-NY10854,NJDEP,PADEP	09/13/2016 12:22	09/14/2016 06:16	KV
7440-47-3	Chromium	ND		mg/L	0.006	0.006	1	EPA 6010C/1311 Certifications: CTDOH,NELAC-NY10854,NJDEP,PADEP	09/13/2016 12:22	09/14/2016 06:16	KV
7439-92-1	**Lead**	**0.030**		mg/L	0.003	0.003	1	EPA 6010C/1311 Certifications: CTDOH,NELAC-NY10854,NJDEP,PADEP	09/13/2016 12:22	09/14/2016 06:16	KV
7782-49-2	**Selenium**	**0.026**	M-SeT C, B	mg/L	0.011	0.011	1	EPA 6010C/1311 Certifications: CTDOH,NELAC-NY10854,NJDEP,PADEP	09/13/2016 12:22	09/14/2016 06:16	KV
7440-22-4	Silver	ND		mg/L	0.006	0.006	1	EPA 6010C/1311 Certifications: CTDOH,NELAC-NY10854,NJDEP,PADEP	09/13/2016 12:22	09/14/2016 06:16	KV

Mercury TCLP by 7473

Log-in Notes: VOA-CONT **Sample Notes:**

Sample Prepared by Method: EPA 7473 water

CAS No.	Parameter	Result	Flag	Units	LOD/MDL	Reported to LOQ	Dilution	Reference Method	Date/Time Prepared	Date/Time Analyzed	Analyst
7439-97-6	Mercury	ND		mg/L	0.0000390	0.000200	1	EPA 7473/1311 Certifications: CTDOH,NJDEP,PADEP,NELAC-NY10854	09/13/2016 12:33	09/14/2016 06:59	ALD

Ignitability

Log-in Notes: VOA-CONT **Sample Notes:**

Sample Prepared by Method: Analysis Preparation

CAS No.	Parameter	Result	Flag	Units	LOD/MDL	Reported to LOQ	Dilution	Reference Method	Date/Time Prepared	Date/Time Analyzed	Analyst
	* Ignitability	Non-Ignit.		-	1	1	1	EPA 1030P Certifications: CTDOH,PADEP	09/13/2016 14:36	09/13/2016 14:58	AD

Total Solids

Log-in Notes: VOA-CONT **Sample Notes:**

Sample Prepared by Method: % Solids Prep

CAS No.	Parameter	Result	Flag	Units	LOD/MDL	Reported to LOQ	Dilution	Reference Method	Date/Time Prepared	Date/Time Analyzed	Analyst
solids	*** % Solids**	**91.4**		%	0.100	0.100	1	SM 2540G Certifications: CTDOH	09/15/2016 08:08	09/15/2016 14:32	LAB

Corrosivity

Log-in Notes: VOA-CONT **Sample Notes:**

Sample Prepared by Method: Analysis Preparation

CAS No.	Parameter	Result	Flag	Units	LOD/MDL	Reported to LOQ	Dilution	Reference Method	Date/Time Prepared	Date/Time Analyzed	Analyst
	pH	**7.38**	HT-pH	pH units		0.500	1	EPA 9045D Certifications: NELAC-NY10854,CTDOH,PADEP	09/13/2016 11:58	09/13/2016 14:32	LAB

Sample Information

Client Sample ID: SB-17-Comp

York Sample ID: 16I0323-10

York Project (SDG) No.	Client Project ID	Matrix	Collection Date/Time	Date Received
16I0323	BEGS or OEGS (15-008-0265)	Soil	September 7, 2016 2:40 pm	09/09/2016

Reactivity-Cyanide

Log-in Notes: VOA-CONT **Sample Notes:**

Sample Prepared by Method: Analysis Preparation

CAS No.	Parameter	Result	Flag	Units	LOD/MDL	Reported to LOQ	Dilution	Reference Method	Date/Time Prepared	Date/Time Analyzed	Analyst
	* Reactivity - Cyanide	ND		mg/kg	0.250	0.250	1	EPA SW-846 Ch.7.3.3	09/13/2016 08:17	09/13/2016 13:00	AD
								Certifications: CTDOH,PADEP			

Reactivity-Sulfide

Log-in Notes: VOA-CONT **Sample Notes:**

Sample Prepared by Method: Analysis Preparation

CAS No.	Parameter	Result	Flag	Units	LOD/MDL	Reported to LOQ	Dilution	Reference Method	Date/Time Prepared	Date/Time Analyzed	Analyst
	* Reactivity - Sulfide	ND		mg/kg	15.0	15.0	1	EPA SW-846 Ch.7.3.4	09/13/2016 08:28	09/13/2016 11:55	LAB
								Certifications: CTDOH,PADEP			

TCLP Extraction for METALS EPA 1311

Log-in Notes: VOA-CONT **Sample Notes:**

Sample Prepared by Method: EPA SW 846-1311 TCLP ext. for metals

CAS No.	Parameter	Result	Flag	Units	LOD/MDL	Reported to LOQ	Dilution	Reference Method	Date/Time Prepared	Date/Time Analyzed	Analyst
	TCLP Extraction	Completed		N/A	1.00	1.00	1	EPA 1311	09/12/2016 18:51	09/13/2016 14:06	TJM
								Certifications: NELAC-NY10854,CTDOH,NJDEP,PADEP			

Sample Information

Client Sample ID: SB-03-14.5-15.0'

York Sample ID: 16I0323-11

York Project (SDG) No.	Client Project ID	Matrix	Collection Date/Time	Date Received
16I0323	BEGS or OEGS (15-008-0265)	Soil	September 8, 2016 9:45 am	09/09/2016

Volatile Organics, 8260 - Comprehensive

Log-in Notes: VOA-CONT **Sample Notes:** VOA-CONT

Sample Prepared by Method: EPA 5035A

CAS No.	Parameter	Result	Flag	Units	Reported to LOD/MDL	LOQ	Dilution	Reference Method	Date/Time Prepared	Date/Time Analyzed	Analyst
630-20-6	1,1,1,2-Tetrachloroethane	ND		mg/kg dry	0.0028	0.0055	1	EPA 8260C	09/15/2016 08:00	09/15/2016 12:20	BK
								Certifications: CTDOH,NELAC-NY10854,NJDEP			
71-55-6	1,1,1-Trichloroethane	ND		mg/kg dry	0.0028	0.0055	1	EPA 8260C	09/15/2016 08:00	09/15/2016 12:20	BK
								Certifications: CTDOH,NELAC-NY10854,NJDEP,PADEP			
79-34-5	1,1,2,2-Tetrachloroethane	ND		mg/kg dry	0.0028	0.0055	1	EPA 8260C	09/15/2016 08:00	09/15/2016 12:20	BK
								Certifications: CTDOH,NELAC-NY10854,NJDEP,PADEP			
76-13-1	1,1,2-Trichloro-1,2,2-trifluoroethane (Freon 113)	ND		mg/kg dry	0.0028	0.0055	1	EPA 8260C	09/15/2016 08:00	09/15/2016 12:20	BK
								Certifications: CTDOH,NELAC-NY10854,NJDEP			
79-00-5	1,1,2-Trichloroethane	ND		mg/kg dry	0.0028	0.0055	1	EPA 8260C	09/15/2016 08:00	09/15/2016 12:20	BK
								Certifications: CTDOH,NELAC-NY10854,NJDEP,PADEP			
75-34-3	1,1-Dichloroethane	ND		mg/kg dry	0.0028	0.0055	1	EPA 8260C	09/15/2016 08:00	09/15/2016 12:20	BK
								Certifications: CTDOH,NELAC-NY10854,NJDEP,PADEP			
75-35-4	1,1-Dichloroethylene	ND		mg/kg dry	0.0028	0.0055	1	EPA 8260C	09/15/2016 08:00	09/15/2016 12:20	BK
								Certifications: CTDOH,NELAC-NY10854,NJDEP,PADEP			

Sample Information

Client Sample ID: SB-03-14.5-15.0'

York Sample ID: 16I0323-11

York Project (SDG) No.	Client Project ID	Matrix	Collection Date/Time	Date Received
16I0323	BEGS or OEGS (15-008-0265)	Soil	September 8, 2016 9:45 am	09/09/2016

Volatile Organics, 8260 - Comprehensive

Log-in Notes: VOA-CONT **Sample Notes:** VOA-CONT

Sample Prepared by Method: EPA 5035A

CAS No.	Parameter	Result	Flag	Units	Reported to LOD/MDL	LOQ	Dilution	Reference Method	Date/Time Prepared	Date/Time Analyzed	Analyst
87-61-6	1,2,3-Trichlorobenzene	ND		mg/kg dry	0.0028	0.0055	1	EPA 8260C Certifications: NELAC-NY10854,NJDEP	09/15/2016 08:00	09/15/2016 12:20	BK
96-18-4	1,2,3-Trichloropropane	ND		mg/kg dry	0.0028	0.0055	1	EPA 8260C Certifications: NELAC-NY10854,NJDEP	09/15/2016 08:00	09/15/2016 12:20	BK
120-82-1	1,2,4-Trichlorobenzene	ND		mg/kg dry	0.0028	0.0055	1	EPA 8260C Certifications: NELAC-NY10854,NJDEP	09/15/2016 08:00	09/15/2016 12:20	BK
95-63-6	1,2,4-Trimethylbenzene	ND		mg/kg dry	0.0028	0.0055	1	EPA 8260C Certifications: CTDOH,NELAC-NY10854,NJDEP	09/15/2016 08:00	09/15/2016 12:20	BK
96-12-8	1,2-Dibromo-3-chloropropane	ND		mg/kg dry	0.0028	0.0055	1	EPA 8260C Certifications: CTDOH,NELAC-NY10854,NJDEP	09/15/2016 08:00	09/15/2016 12:20	BK
106-93-4	1,2-Dibromoethane	ND		mg/kg dry	0.0028	0.0055	1	EPA 8260C Certifications: CTDOH,NELAC-NY10854,NJDEP	09/15/2016 08:00	09/15/2016 12:20	BK
95-50-1	1,2-Dichlorobenzene	ND		mg/kg dry	0.0028	0.0055	1	EPA 8260C Certifications: CTDOH,NELAC-NY10854,NJDEP,PADEP	09/15/2016 08:00	09/15/2016 12:20	BK
[illegible]06-2	1,2-Dichloroethane	ND		mg/kg dry	0.0028	0.0055	1	EPA 8260C Certifications: CTDOH,NELAC-NY10854,NJDEP,PADEP	09/15/2016 08:00	09/15/2016 12:20	BK
78-87-5	1,2-Dichloropropane	ND		mg/kg dry	0.0028	0.0055	1	EPA 8260C Certifications: CTDOH,NELAC-NY10854,NJDEP	09/15/2016 08:00	09/15/2016 12:20	BK
108-67-8	1,3,5-Trimethylbenzene	ND		mg/kg dry	0.0028	0.0055	1	EPA 8260C Certifications: CTDOH,NELAC-NY10854,NJDEP	09/15/2016 08:00	09/15/2016 12:20	BK
541-73-1	1,3-Dichlorobenzene	ND		mg/kg dry	0.0028	0.0055	1	EPA 8260C Certifications: CTDOH,NELAC-NY10854,NJDEP,PADEP	09/15/2016 08:00	09/15/2016 12:20	BK
106-46-7	1,4-Dichlorobenzene	ND		mg/kg dry	0.0028	0.0055	1	EPA 8260C Certifications: CTDOH,NELAC-NY10854,NJDEP,PADEP	09/15/2016 08:00	09/15/2016 12:20	BK
123-91-1	1,4-Dioxane	ND		mg/kg dry	0.055	0.11	1	EPA 8260C Certifications: NELAC-NY10854,NJDEP	09/15/2016 08:00	09/15/2016 12:20	BK
78-93-3	2-Butanone	ND		mg/kg dry	0.0028	0.0055	1	EPA 8260C Certifications: CTDOH,NELAC-NY10854,NJDEP	09/15/2016 08:00	09/15/2016 12:20	BK
591-78-6	2-Hexanone	ND		mg/kg dry	0.0028	0.0055	1	EPA 8260C Certifications: CTDOH,NELAC-NY10854,NJDEP	09/15/2016 08:00	09/15/2016 12:20	BK
108-10-1	4-Methyl-2-pentanone	ND		mg/kg dry	0.0028	0.0055	1	EPA 8260C Certifications: CTDOH,NELAC-NY10854,NJDEP	09/15/2016 08:00	09/15/2016 12:20	BK
67-64-1	**Acetone**	**0.0066**	SCAL-E, J	mg/kg dry	0.0055	0.011	1	EPA 8260C Certifications: CTDOH,NELAC-NY10854,NJDEP	09/15/2016 08:00	09/15/2016 12:20	BK
107-02-8	Acrolein	ND		mg/kg dry	0.0055	0.011	1	EPA 8260C Certifications: CTDOH,NELAC-NY10854,NJDEP	09/15/2016 08:00	09/15/2016 12:20	BK
107-13-1	Acrylonitrile	ND		mg/kg dry	0.0028	0.0055	1	EPA 8260C Certifications: CTDOH,NELAC-NY10854,NJDEP	09/15/2016 08:00	09/15/2016 12:20	BK
71-43-2	Benzene	ND		mg/kg dry	0.0028	0.0055	1	EPA 8260C Certifications: CTDOH,NELAC-NY10854,NJDEP,PADEP	09/15/2016 08:00	09/15/2016 12:20	BK
74-97-5	Bromochloromethane	ND		mg/kg dry	0.0028	0.0055	1	EPA 8260C Certifications: NELAC-NY10854,NJDEP	09/15/2016 08:00	09/15/2016 12:20	BK
[illegible]-4	Bromodichloromethane	ND		mg/kg dry	0.0028	0.0055	1	EPA 8260C Certifications: CTDOH,NELAC-NY10854,NJDEP,PADEP	09/15/2016 08:00	09/15/2016 12:20	BK

Sample Information

Client Sample ID: SB-03-14.5-15.0'

York Sample ID: 16I0323-11

York Project (SDG) No.	Client Project ID	Matrix	Collection Date/Time	Date Received
16I0323	BEGS or OEGS (15-008-0265)	Soil	September 8, 2016 9:45 am	09/09/2016

Volatile Organics, 8260 - Comprehensive

Log-in Notes: VOA-CONT **Sample Notes:** VOA-CONT

Sample Prepared by Method: EPA 5035A

CAS No.	Parameter	Result	Flag	Units	Reported to LOD/MDL	LOQ	Dilution	Reference Method	Date/Time Prepared	Date/Time Analyzed	Analyst
75-25-2	Bromoform	ND		mg/kg dry	0.0028	0.0055	1	EPA 8260C Certifications: CTDOH,NELAC-NY10854,NJDEP,PADEP	09/15/2016 08:00	09/15/2016 12:20	BK
74-83-9	Bromomethane	ND		mg/kg dry	0.0028	0.0055	1	EPA 8260C Certifications: CTDOH,NELAC-NY10854,NJDEP,PADEP	09/15/2016 08:00	09/15/2016 12:20	BK
75-15-0	Carbon disulfide	ND		mg/kg dry	0.0028	0.0055	1	EPA 8260C Certifications: CTDOH,NELAC-NY10854,NJDEP	09/15/2016 08:00	09/15/2016 12:20	BK
56-23-5	Carbon tetrachloride	ND		mg/kg dry	0.0028	0.0055	1	EPA 8260C Certifications: CTDOH,NELAC-NY10854,NJDEP,PADEP	09/15/2016 08:00	09/15/2016 12:20	BK
108-90-7	Chlorobenzene	ND		mg/kg dry	0.0028	0.0055	1	EPA 8260C Certifications: CTDOH,NELAC-NY10854,NJDEP,PADEP	09/15/2016 08:00	09/15/2016 12:20	BK
75-00-3	Chloroethane	ND		mg/kg dry	0.0028	0.0055	1	EPA 8260C Certifications: CTDOH,NELAC-NY10854,NJDEP,PADEP	09/15/2016 08:00	09/15/2016 12:20	BK
67-66-3	Chloroform	ND		mg/kg dry	0.0028	0.0055	1	EPA 8260C Certifications: CTDOH,NELAC-NY10854,NJDEP,PADEP	09/15/2016 08:00	09/15/2016 12:20	BK
74-87-3	Chloromethane	ND		mg/kg dry	0.0028	0.0055	1	EPA 8260C Certifications: CTDOH,NELAC-NY10854,NJDEP,PADEP	09/15/2016 08:00	09/15/2016 12:20	BK
156-59-2	cis-1,2-Dichloroethylene	ND		mg/kg dry	0.0028	0.0055	1	EPA 8260C Certifications: CTDOH,NELAC-NY10854,NJDEP	09/15/2016 08:00	09/15/2016 12:20	BK
10061-01-5	cis-1,3-Dichloropropylene	ND		mg/kg dry	0.0028	0.0055	1	EPA 8260C Certifications: CTDOH,NELAC-NY10854,NJDEP,PADEP	09/15/2016 08:00	09/15/2016 12:20	BK
110-82-7	Cyclohexane	ND		mg/kg dry	0.0028	0.0055	1	EPA 8260C Certifications: NELAC-NY10854,NJDEP	09/15/2016 08:00	09/15/2016 12:20	BK
124-48-1	Dibromochloromethane	ND		mg/kg dry	0.0028	0.0055	1	EPA 8260C Certifications: NELAC-NY10854,NJDEP,PADEP	09/15/2016 08:00	09/15/2016 12:20	BK
74-95-3	Dibromomethane	ND		mg/kg dry	0.0028	0.0055	1	EPA 8260C Certifications: NELAC-NY10854,NJDEP	09/15/2016 08:00	09/15/2016 12:20	BK
75-71-8	Dichlorodifluoromethane	ND		mg/kg dry	0.0028	0.0055	1	EPA 8260C Certifications: NELAC-NY10854,NJDEP	09/15/2016 08:00	09/15/2016 12:20	BK
100-41-4	Ethyl Benzene	ND		mg/kg dry	0.0028	0.0055	1	EPA 8260C Certifications: CTDOH,NELAC-NY10854,NJDEP,PADEP	09/15/2016 08:00	09/15/2016 12:20	BK
87-68-3	Hexachlorobutadiene	ND		mg/kg dry	0.0028	0.0055	1	EPA 8260C Certifications: NELAC-NY10854,NJDEP	09/15/2016 08:00	09/15/2016 12:20	BK
98-82-8	Isopropylbenzene	ND		mg/kg dry	0.0028	0.0055	1	EPA 8260C Certifications: CTDOH,NELAC-NY10854,NJDEP	09/15/2016 08:00	09/15/2016 12:20	BK
79-20-9	Methyl acetate	ND		mg/kg dry	0.0028	0.0055	1	EPA 8260C Certifications: NELAC-NY10854,NJDEP	09/15/2016 08:00	09/15/2016 12:20	BK
1634-04-4	Methyl tert-butyl ether (MTBE)	ND		mg/kg dry	0.0028	0.0055	1	EPA 8260C Certifications: CTDOH,NELAC-NY10854,NJDEP	09/15/2016 08:00	09/15/2016 12:20	BK
108-87-2	Methylcyclohexane	ND		mg/kg dry	0.0028	0.0055	1	EPA 8260C Certifications: NELAC-NY10854,NJDEP	09/15/2016 08:00	09/15/2016 12:20	BK
75-09-2	Methylene chloride	ND		mg/kg dry	0.0055	0.011	1	EPA 8260C Certifications: CTDOH,NELAC-NY10854,NJDEP,PADEP	09/15/2016 08:00	09/15/2016 12:20	BK
104-51-8	n-Butylbenzene	ND		mg/kg dry	0.0028	0.0055	1	EPA 8260C Certifications: CTDOH,NELAC-NY10854,NJDEP	09/15/2016 08:00	09/15/2016 12:20	BK

Sample Information

Client Sample ID: SB-03-14.5-15.0' **York Sample ID:** 16I0323-11

York Project (SDG) No.	Client Project ID	Matrix	Collection Date/Time	Date Received
16I0323	BEGS or OEGS (15-008-0265)	Soil	September 8, 2016 9:45 am	09/09/2016

Volatile Organics, 8260 - Comprehensive

Log-in Notes: VOA-CONT **Sample Notes:** VOA-CONT

Sample Prepared by Method: EPA 5035A

CAS No.	Parameter	Result	Flag	Units	Reported to LOD/MDL	LOQ	Dilution	Reference Method	Date/Time Prepared	Date/Time Analyzed	Analyst
103-65-1	n-Propylbenzene	ND		mg/kg dry	0.0028	0.0055	1	EPA 8260C Certifications: CTDOH,NELAC-NY10854,NJDEP	09/15/2016 08:00	09/15/2016 12:20	BK
95-47-6	o-Xylene	ND		mg/kg dry	0.0028	0.0055	1	EPA 8260C Certifications: CTDOH,NELAC-NY10854	09/15/2016 08:00	09/15/2016 12:20	BK
179601-23-1	p- & m- Xylenes	ND		mg/kg dry	0.0055	0.011	1	EPA 8260C Certifications: CTDOH,NELAC-NY10854	09/15/2016 08:00	09/15/2016 12:20	BK
99-87-6	p-Isopropyltoluene	ND		mg/kg dry	0.0028	0.0055	1	EPA 8260C Certifications: CTDOH,NELAC-NY10854,NJDEP	09/15/2016 08:00	09/15/2016 12:20	BK
135-98-8	sec-Butylbenzene	ND		mg/kg dry	0.0028	0.0055	1	EPA 8260C Certifications: CTDOH,NELAC-NY10854,NJDEP	09/15/2016 08:00	09/15/2016 12:20	BK
100-42-5	Styrene	ND		mg/kg dry	0.0028	0.0055	1	EPA 8260C Certifications: CTDOH,NELAC-NY10854,NJDEP	09/15/2016 08:00	09/15/2016 12:20	BK
75-65-0	tert-Butyl alcohol (TBA)	ND		mg/kg dry	0.0028	0.011	1	EPA 8260C Certifications: NELAC-NY10854,NJDEP	09/15/2016 08:00	09/15/2016 12:20	BK
[illegible]6-6	tert-Butylbenzene	ND		mg/kg dry	0.0028	0.0055	1	EPA 8260C Certifications: CTDOH,NELAC-NY10854,NJDEP	09/15/2016 08:00	09/15/2016 12:20	BK
127-18-4	Tetrachloroethylene	ND		mg/kg dry	0.0028	0.0055	1	EPA 8260C Certifications: CTDOH,NELAC-NY10854,NJDEP,PADEP	09/15/2016 08:00	09/15/2016 12:20	BK
108-88-3	Toluene	ND		mg/kg dry	0.0028	0.0055	1	EPA 8260C Certifications: CTDOH,NELAC-NY10854,NJDEP,PADEP	09/15/2016 08:00	09/15/2016 12:20	BK
156-60-5	trans-1,2-Dichloroethylene	ND		mg/kg dry	0.0028	0.0055	1	EPA 8260C Certifications: CTDOH,NELAC-NY10854,NJDEP	09/15/2016 08:00	09/15/2016 12:20	BK
10061-02-6	trans-1,3-Dichloropropylene	ND		mg/kg dry	0.0028	0.0055	1	EPA 8260C Certifications: CTDOH,NELAC-NY10854,NJDEP,PADEP	09/15/2016 08:00	09/15/2016 12:20	BK
79-01-6	Trichloroethylene	ND		mg/kg dry	0.0028	0.0055	1	EPA 8260C Certifications: CTDOH,NELAC-NY10854,NJDEP,PADEP	09/15/2016 08:00	09/15/2016 12:20	BK
75-69-4	Trichlorofluoromethane	ND		mg/kg dry	0.0028	0.0055	1	EPA 8260C Certifications: CTDOH,NELAC-NY10854,NJDEP,PADEP	09/15/2016 08:00	09/15/2016 12:20	BK
75-01-4	Vinyl Chloride	ND		mg/kg dry	0.0028	0.0055	1	EPA 8260C Certifications: CTDOH,NELAC-NY10854,NJDEP,PADEP	09/15/2016 08:00	09/15/2016 12:20	BK
1330-20-7	Xylenes, Total	ND		mg/kg dry	0.0083	0.017	1	EPA 8260C Certifications: CTDOH,NELAC-NY10854,NJDEP,PADEP	09/15/2016 08:00	09/15/2016 12:20	BK

	Surrogate Recoveries	Result	Acceptance Range
17060-07-0	*Surrogate: 1,2-Dichloroethane-d4*	*92.3 %*	*77-125*
2037-26-5	*Surrogate: Toluene-d8*	*97.8 %*	*85-120*
460-00-4	*Surrogate: p-Bromofluorobenzene*	*102 %*	*76-130*

Total Solids

Log-in Notes: VOA-CONT **Sample Notes:**

Sample Prepared by Method: % Solids Prep

CAS No.	Parameter	Result	Flag	Units	LOD/MDL	Reported to LOQ	Dilution	Reference Method	Date/Time Prepared	Date/Time Analyzed	Analyst
[illegible]ds	*** % Solids**	**90.5**		%	0.100	0.100	1	SM 2540G Certifications: CTDOH	09/15/2016 08:06	09/15/2016 15:16	LAB

Sample Information

Client Sample ID: SB-03-14.5-15.0' **York Sample ID:** 16I0323-11

York Project (SDG) No.	Client Project ID	Matrix	Collection Date/Time	Date Received
16I0323	BEGS or OEGS (15-008-0265)	Soil	September 8, 2016 9:45 am	09/09/2016

Sample Information

Client Sample ID: SB-03-Comp **York Sample ID:** 16I0323-12

York Project (SDG) No.	Client Project ID	Matrix	Collection Date/Time	Date Received
16I0323	BEGS or OEGS (15-008-0265)	Soil	September 8, 2016 9:50 am	09/09/2016

Semi-Volatiles, PAH Target List **Log-in Notes:** VOA-CONT **Sample Notes:**

Sample Prepared by Method: EPA 3550C

CAS No.	Parameter	Result	Flag	Units	Reported to LOD/MDL	LOQ	Dilution	Reference Method	Date/Time Prepared	Date/Time Analyzed	Analyst
91-57-6	2-Methylnaphthalene	ND		mg/kg dry	0.0468	0.0934	2	EPA 8270D Certifications: CTDOH,NELAC-NY10854,NJDEP,PADEP	09/15/2016 08:12	09/16/2016 13:15	KH
83-32-9	Acenaphthene	ND		mg/kg dry	0.0468	0.0934	2	EPA 8270D Certifications: CTDOH,NELAC-NY10854,NJDEP,PADEP	09/15/2016 08:12	09/16/2016 13:15	KH
208-96-8	Acenaphthylene	ND		mg/kg dry	0.0468	0.0934	2	EPA 8270D Certifications: CTDOH,NELAC-NY10854,NJDEP,PADEP	09/15/2016 08:12	09/16/2016 13:15	KH
120-12-7	Anthracene	ND		mg/kg dry	0.0468	0.0934	2	EPA 8270D Certifications: CTDOH,NELAC-NY10854,NJDEP,PADEP	09/15/2016 08:12	09/16/2016 13:15	KH
56-55-3	Benzo(a)anthracene	ND		mg/kg dry	0.0468	0.0934	2	EPA 8270D Certifications: CTDOH,NELAC-NY10854,NJDEP,PADEP	09/15/2016 08:12	09/16/2016 13:15	KH
50-32-8	Benzo(a)pyrene	ND		mg/kg dry	0.0468	0.0934	2	EPA 8270D Certifications: CTDOH,NELAC-NY10854,NJDEP,PADEP	09/15/2016 08:12	09/16/2016 13:15	KH
205-99-2	Benzo(b)fluoranthene	ND		mg/kg dry	0.0468	0.0934	2	EPA 8270D Certifications: CTDOH,NELAC-NY10854,NJDEP,PADEP	09/15/2016 08:12	09/16/2016 13:15	KH
191-24-2	Benzo(g,h,i)perylene	ND		mg/kg dry	0.0468	0.0934	2	EPA 8270D Certifications: CTDOH,NELAC-NY10854,NJDEP,PADEP	09/15/2016 08:12	09/16/2016 13:15	KH
207-08-9	Benzo(k)fluoranthene	ND		mg/kg dry	0.0468	0.0934	2	EPA 8270D Certifications: CTDOH,NELAC-NY10854,NJDEP,PADEP	09/15/2016 08:12	09/16/2016 13:15	KH
218-01-9	Chrysene	ND		mg/kg dry	0.0468	0.0934	2	EPA 8270D Certifications: CTDOH,NELAC-NY10854,NJDEP,PADEP	09/15/2016 08:12	09/16/2016 13:15	KH
53-70-3	Dibenzo(a,h)anthracene	ND		mg/kg dry	0.0468	0.0934	2	EPA 8270D Certifications: CTDOH,NELAC-NY10854,NJDEP,PADEP	09/15/2016 08:12	09/16/2016 13:15	KH
206-44-0	Fluoranthene	ND		mg/kg dry	0.0468	0.0934	2	EPA 8270D Certifications: CTDOH,NELAC-NY10854,NJDEP,PADEP	09/15/2016 08:12	09/16/2016 13:15	KH
86-73-7	Fluorene	ND		mg/kg dry	0.0468	0.0934	2	EPA 8270D Certifications: NELAC-NY10854,NJDEP,PADEP	09/15/2016 08:12	09/16/2016 13:15	KH
193-39-5	Indeno(1,2,3-cd)pyrene	ND		mg/kg dry	0.0468	0.0934	2	EPA 8270D Certifications: CTDOH,NELAC-NY10854,NJDEP,PADEP	09/15/2016 08:12	09/16/2016 13:15	KH
91-20-3	Naphthalene	ND		mg/kg dry	0.0468	0.0934	2	EPA 8270D Certifications: CTDOH,NELAC-NY10854,NJDEP,PADEP	09/15/2016 08:12	09/16/2016 13:15	KH
85-01-8	Phenanthrene	ND		mg/kg dry	0.0468	0.0934	2	EPA 8270D Certifications: CTDOH,NELAC-NY10854,NJDEP,PADEP	09/15/2016 08:12	09/16/2016 13:15	KH
129-00-0	Pyrene	ND		mg/kg dry	0.0468	0.0934	2	EPA 8270D Certifications: CTDOH,NELAC-NY10854,NJDEP,PADEP	09/15/2016 08:12	09/16/2016 13:15	KH

Sample Information

Client Sample ID: SB-03-Comp | **York Sample ID:** 16I0323-12

York Project (SDG) No.	Client Project ID	Matrix	Collection Date/Time	Date Received
16I0323	BEGS or OEGS (15-008-0265)	Soil	September 8, 2016 9:50 am	09/09/2016

Semi-Volatiles, PAH Target List

Log-in Notes: VOA-CONT **Sample Notes:**

Sample Prepared by Method: EPA 3550C

CAS No.	Parameter	Result	Flag	Units	Reported to LOD/MDL	LOQ	Dilution	Reference Method	Date/Time Prepared	Date/Time Analyzed	Analyst
	Surrogate Recoveries	**Result**		**Acceptance Range**							
4165-60-0	*Surrogate: Nitrobenzene-d5*	*42.9 %*		*22-108*							
321-60-8	*Surrogate: 2-Fluorobiphenyl*	*59.2 %*		*21-113*							
1718-51-0	*Surrogate: Terphenyl-d14*	*45.7 %*		*24-116*							

Polychlorinated Biphenyls (PCB)

Log-in Notes: VOA-CONT **Sample Notes:**

Sample Prepared by Method: EPA 3550C

CAS No.	Parameter	Result	Flag	Units	LOD/MDL	Reported to LOQ	Dilution	Reference Method	Date/Time Prepared	Date/Time Analyzed	Analyst
12674-11-2	Aroclor 1016	ND		mg/kg dry	0.0187	0.0187	1	EPA 8082A Certifications: NELAC-NY10854,CTDOH,NJDEP,PADEP	09/13/2016 09:10	09/14/2016 00:32	AMC
11104-28-2	Aroclor 1221	ND		mg/kg dry	0.0187	0.0187	1	EPA 8082A Certifications: NELAC-NY10854,CTDOH,NJDEP,PADEP	09/13/2016 09:10	09/14/2016 00:32	AMC
[illegible]1-16-5	Aroclor 1232	ND		mg/kg dry	0.0187	0.0187	1	EPA 8082A Certifications: NELAC-NY10854,CTDOH,NJDEP,PADEP	09/13/2016 09:10	09/14/2016 00:32	AMC
53469-21-9	Aroclor 1242	ND		mg/kg dry	0.0187	0.0187	1	EPA 8082A Certifications: NELAC-NY10854,CTDOH,NJDEP,PADEP	09/13/2016 09:10	09/14/2016 00:32	AMC
12672-29-6	Aroclor 1248	ND		mg/kg dry	0.0187	0.0187	1	EPA 8082A Certifications: NELAC-NY10854,CTDOH,NJDEP,PADEP	09/13/2016 09:10	09/14/2016 00:32	AMC
11097-69-1	Aroclor 1254	ND		mg/kg dry	0.0187	0.0187	1	EPA 8082A Certifications: NELAC-NY10854,CTDOH,NJDEP,PADEP	09/13/2016 09:10	09/14/2016 00:32	AMC
11096-82-5	Aroclor 1260	ND		mg/kg dry	0.0187	0.0187	1	EPA 8082A Certifications: NELAC-NY10854,CTDOH,NJDEP,PADEP	09/13/2016 09:10	09/14/2016 00:32	AMC
1336-36-3	* Total PCBs	ND		mg/kg dry	0.0187	0.0187	1	EPA 8082A Certifications:	09/13/2016 09:10	09/14/2016 00:32	AMC
	Surrogate Recoveries	**Result**		**Acceptance Range**							
877-09-8	*Surrogate: Tetrachloro-m-xylene*	*49.0 %*		*30-140*							
2051-24-3	*Surrogate: Decachlorobiphenyl*	*43.5 %*		*30-140*							

Total Petroleum Hydrocarbons-DRO (C10-C28)

Log-in Notes: VOA-CONT **Sample Notes:**

Sample Prepared by Method: EPA 3550C

CAS No.	Parameter	Result	Flag	Units	LOD/MDL	Reported to LOQ	Dilution	Reference Method	Date/Time Prepared	Date/Time Analyzed	Analyst
	Total Petroleum Hydrocarbons-DRO	ND		mg/kg dry	3.81	11.2	1	EPA 8015D Certifications: NELAC-NY10854,NJDEP,PADEP	09/15/2016 07:34	09/15/2016 20:56	AMC
	Surrogate Recoveries	**Result**		**Acceptance Range**							
638-68-6	*Surrogate: Triacontane*	*75.0 %*		*30-150*							

[illegible]tal Petroleum Hydrocarbons-GRO (C5-C10)

Log-in Notes: VOA-CONT **Sample Notes:**

[illegible]le Prepared by Method: EPA 5035A

CAS No.	Parameter	Result	Flag	Units	LOD/MDL	Reported to LOQ	Dilution	Reference Method	Date/Time Prepared	Date/Time Analyzed	Analyst

Sample Information

Client Sample ID: SB-03-Comp **York Sample ID:** 16I0323-12

York Project (SDG) No.	Client Project ID	Matrix	Collection Date/Time	Date Received
16I0323	BEGS or OEGS (15-008-0265)	Soil	September 8, 2016 9:50 am	09/09/2016

Total Petroleum Hydrocarbons-GRO (C5-C10)

Log-in Notes: VOA-CONT **Sample Notes:**

Sample Prepared by Method: EPA 5035A

CAS No.	Parameter	Result	Flag	Units	LOD/MDL	Reported to LOQ	Dilution	Reference Method	Date/Time Prepared	Date/Time Analyzed	Analyst
	Total Petroleum Hydrocarbons-GRO	ND		mg/kg dry	44.8	89.6	100	EPA 8015D Certifications: NELAC-NY10854,NJDEP,PADEP	09/14/2016 08:58	09/14/2016 20:41	OW

	Surrogate Recoveries	Result	Acceptance Range
460-00-4	*Surrogate: p-Bromofluorobenzene*	*91.6 %*	*70-130*

Metals, TCLP RCRA

Log-in Notes: VOA-CONT **Sample Notes:**

Sample Prepared by Method: EPA 3015A/1311

CAS No.	Parameter	Result	Flag	Units	LOD/MDL	Reported to LOQ	Dilution	Reference Method	Date/Time Prepared	Date/Time Analyzed	Analyst
7440-38-2	Arsenic	ND		mg/L	0.004	0.004	1	EPA 6010C/1311 Certifications: CTDOH,NELAC-NY10854,NJDEP,PADEP	09/13/2016 12:22	09/14/2016 06:21	KV
7440-39-3	**Barium**	**0.380**		mg/L	0.011	0.011	1	EPA 6010C/1311 Certifications: CTDOH,NELAC-NY10854,NJDEP,PADEP	09/13/2016 12:22	09/14/2016 06:21	KV
7440-43-9	Cadmium	ND		mg/L	0.003	0.003	1	EPA 6010C/1311 Certifications: CTDOH,NELAC-NY10854,NJDEP,PADEP	09/13/2016 12:22	09/14/2016 06:21	KV
7440-47-3	Chromium	ND		mg/L	0.006	0.006	1	EPA 6010C/1311 Certifications: CTDOH,NELAC-NY10854,NJDEP,PADEP	09/13/2016 12:22	09/14/2016 06:21	KV
7439-92-1	**Lead**	**0.029**		mg/L	0.003	0.003	1	EPA 6010C/1311 Certifications: CTDOH,NELAC-NY10854,NJDEP,PADEP	09/13/2016 12:22	09/14/2016 06:21	KV
7782-49-2	**Selenium**	**0.027**	M-SeT C, B	mg/L	0.011	0.011	1	EPA 6010C/1311 Certifications: CTDOH,NELAC-NY10854,NJDEP,PADEP	09/13/2016 12:22	09/14/2016 06:21	KV
7440-22-4	Silver	ND		mg/L	0.006	0.006	1	EPA 6010C/1311 Certifications: CTDOH,NELAC-NY10854,NJDEP,PADEP	09/13/2016 12:22	09/14/2016 06:21	KV

Mercury TCLP by 7473

Log-in Notes: VOA-CONT **Sample Notes:**

Sample Prepared by Method: EPA 7473 water

CAS No.	Parameter	Result	Flag	Units	LOD/MDL	Reported to LOQ	Dilution	Reference Method	Date/Time Prepared	Date/Time Analyzed	Analyst
7439-97-6	Mercury	ND		mg/L	0.0000390	0.000200	1	EPA 7473/1311 Certifications: CTDOH,NJDEP,PADEP,NELAC-NY10854	09/13/2016 12:33	09/14/2016 06:59	ALD

Ignitability

Log-in Notes: VOA-CONT **Sample Notes:**

Sample Prepared by Method: Analysis Preparation

CAS No.	Parameter	Result	Flag	Units	LOD/MDL	Reported to LOQ	Dilution	Reference Method	Date/Time Prepared	Date/Time Analyzed	Analyst
	* Ignitability	Non-Ignit.		-	1	1	1	EPA 1030P Certifications: CTDOH,PADEP	09/13/2016 14:36	09/13/2016 14:58	AD

Total Solids

Log-in Notes: VOA-CONT **Sample Notes:**

Sample Prepared by Method: % Solids Prep

CAS No.	Parameter	Result	Flag	Units	LOD/MDL	Reported to LOQ	Dilution	Reference Method	Date/Time Prepared	Date/Time Analyzed	Analyst

Sample Information

Client Sample ID: SB-03-Comp **York Sample ID:** 16I0323-12

York Project (SDG) No.	Client Project ID	Matrix	Collection Date/Time	Date Received
16I0323	BEGS or OEGS (15-008-0265)	Soil	September 8, 2016 9:50 am	09/09/2016

Total Solids

Log-in Notes: VOA-CONT **Sample Notes:**

Sample Prepared by Method: % Solids Prep

CAS No.	Parameter	Result	Flag	Units	LOD/MDL	Reported to LOQ	Dilution	Reference Method	Date/Time Prepared	Date/Time Analyzed	Analyst
solids	* % Solids	89.3		%	0.100	0.100	1	SM 2540G Certifications: CTDOH	09/15/2016 08:06	09/15/2016 15:16	LAB

Corrosivity

Log-in Notes: VOA-CONT **Sample Notes:**

Sample Prepared by Method: Analysis Preparation

CAS No.	Parameter	Result	Flag	Units	LOD/MDL	Reported to LOQ	Dilution	Reference Method	Date/Time Prepared	Date/Time Analyzed	Analyst
	pH	7.64	HT-pH	pH units		0.500	1	EPA 9045D Certifications: NELAC-NY10854,CTDOH,PADEP	09/13/2016 11:58	09/13/2016 14:32	LAB

Reactivity-Cyanide

Log-in Notes: VOA-CONT **Sample Notes:**

Sample Prepared by Method: Analysis Preparation

CAS No.	Parameter	Result	Flag	Units	LOD/MDL	Reported to LOQ	Dilution	Reference Method	Date/Time Prepared	Date/Time Analyzed	Analyst
	* Reactivity - Cyanide	ND		mg/kg	0.250	0.250	1	EPA SW-846 Ch.7.3.3 Certifications: CTDOH,PADEP	09/13/2016 08:17	09/13/2016 13:00	AD

Reactivity-Sulfide

Log-in Notes: VOA-CONT **Sample Notes:**

Sample Prepared by Method: Analysis Preparation

CAS No.	Parameter	Result	Flag	Units	LOD/MDL	Reported to LOQ	Dilution	Reference Method	Date/Time Prepared	Date/Time Analyzed	Analyst
	* Reactivity - Sulfide	ND		mg/kg	15.0	15.0	1	EPA SW-846 Ch.7.3.4 Certifications: CTDOH,PADEP	09/13/2016 08:28	09/13/2016 11:55	LAB

TCLP Extraction for METALS EPA 1311

Log-in Notes: VOA-CONT **Sample Notes:**

Sample Prepared by Method: EPA SW 846-1311 TCLP ext. for metals

CAS No.	Parameter	Result	Flag	Units	LOD/MDL	Reported to LOQ	Dilution	Reference Method	Date/Time Prepared	Date/Time Analyzed	Analyst
	TCLP Extraction	Completed		N/A	1.00	1.00	1	EPA 1311 Certifications: NELAC-NY10854,CTDOH,NJDEP,PADEP	09/12/2016 18:51	09/13/2016 14:06	TJM

Sample Information

Client Sample ID: SB-14-14.5-15.0' **York Sample ID:** 16I0323-13

York Project (SDG) No.	Client Project ID	Matrix	Collection Date/Time	Date Received
16I0323	BEGS or OEGS (15-008-0265)	Soil	September 8, 2016 10:50 am	09/09/2016

Volatile Organics, 8260 - Comprehensive

Log-in Notes: VOA-CONT **Sample Notes:** VOA-CONT

Sample Prepared by Method: EPA 5035A

CAS No.	Parameter	Result	Flag	Units	Reported to LOD/MDL	LOQ	Dilution	Reference Method	Date/Time Prepared	Date/Time Analyzed	Analyst

Sample Information

Client Sample ID: SB-14-14.5-15.0'

York Sample ID: 16I0323-13

York Project (SDG) No.	Client Project ID	Matrix	Collection Date/Time	Date Received
16I0323	BEGS or OEGS (15-008-0265)	Soil	September 8, 2016 10:50 am	09/09/2016

Volatile Organics, 8260 - Comprehensive

Log-in Notes: VOA-CONT **Sample Notes:** VOA-CONT

Sample Prepared by Method: EPA 5035A

CAS No.	Parameter	Result	Flag	Units	Reported to LOD/MDL	LOQ	Dilution	Reference Method	Date/Time Prepared	Date/Time Analyzed	Analyst
630-20-6	1,1,1,2-Tetrachloroethane	ND		mg/kg dry	0.0027	0.0054	1	EPA 8260C Certifications: CTDOH,NELAC-NY10854,NJDEP	09/14/2016 18:55	09/15/2016 05:09	SS
71-55-6	1,1,1-Trichloroethane	ND		mg/kg dry	0.0027	0.0054	1	EPA 8260C Certifications: CTDOH,NELAC-NY10854,NJDEP,PADEP	09/14/2016 18:55	09/15/2016 05:09	SS
79-34-5	1,1,2,2-Tetrachloroethane	ND		mg/kg dry	0.0027	0.0054	1	EPA 8260C Certifications: CTDOH,NELAC-NY10854,NJDEP,PADEP	09/14/2016 18:55	09/15/2016 05:09	SS
76-13-1	1,1,2-Trichloro-1,2,2-trifluoroethane (Freon 113)	ND		mg/kg dry	0.0027	0.0054	1	EPA 8260C Certifications: CTDOH,NELAC-NY10854,NJDEP	09/14/2016 18:55	09/15/2016 05:09	SS
79-00-5	1,1,2-Trichloroethane	ND		mg/kg dry	0.0027	0.0054	1	EPA 8260C Certifications: CTDOH,NELAC-NY10854,NJDEP,PADEP	09/14/2016 18:55	09/15/2016 05:09	SS
75-34-3	1,1-Dichloroethane	ND		mg/kg dry	0.0027	0.0054	1	EPA 8260C Certifications: CTDOH,NELAC-NY10854,NJDEP,PADEP	09/14/2016 18:55	09/15/2016 05:09	SS
75-35-4	1,1-Dichloroethylene	ND		mg/kg dry	0.0027	0.0054	1	EPA 8260C Certifications: CTDOH,NELAC-NY10854,NJDEP,PADEP	09/14/2016 18:55	09/15/2016 05:09	SS
87-61-6	1,2,3-Trichlorobenzene	ND		mg/kg dry	0.0027	0.0054	1	EPA 8260C Certifications: NELAC-NY10854,NJDEP	09/14/2016 18:55	09/15/2016 05:09	SS
96-18-4	1,2,3-Trichloropropane	ND		mg/kg dry	0.0027	0.0054	1	EPA 8260C Certifications: NELAC-NY10854,NJDEP	09/14/2016 18:55	09/15/2016 05:09	SS
120-82-1	1,2,4-Trichlorobenzene	ND		mg/kg dry	0.0027	0.0054	1	EPA 8260C Certifications: NELAC-NY10854,NJDEP	09/14/2016 18:55	09/15/2016 05:09	SS
95-63-6	1,2,4-Trimethylbenzene	ND		mg/kg dry	0.0027	0.0054	1	EPA 8260C Certifications: CTDOH,NELAC-NY10854,NJDEP	09/14/2016 18:55	09/15/2016 05:09	SS
96-12-8	1,2-Dibromo-3-chloropropane	ND		mg/kg dry	0.0027	0.0054	1	EPA 8260C Certifications: CTDOH,NELAC-NY10854,NJDEP	09/14/2016 18:55	09/15/2016 05:09	SS
106-93-4	1,2-Dibromoethane	ND		mg/kg dry	0.0027	0.0054	1	EPA 8260C Certifications: CTDOH,NELAC-NY10854,NJDEP	09/14/2016 18:55	09/15/2016 05:09	SS
95-50-1	1,2-Dichlorobenzene	ND		mg/kg dry	0.0027	0.0054	1	EPA 8260C Certifications: CTDOH,NELAC-NY10854,NJDEP,PADEP	09/14/2016 18:55	09/15/2016 05:09	SS
107-06-2	1,2-Dichloroethane	ND		mg/kg dry	0.0027	0.0054	1	EPA 8260C Certifications: CTDOH,NELAC-NY10854,NJDEP,PADEP	09/14/2016 18:55	09/15/2016 05:09	SS
78-87-5	1,2-Dichloropropane	ND		mg/kg dry	0.0027	0.0054	1	EPA 8260C Certifications: CTDOH,NELAC-NY10854,NJDEP	09/14/2016 18:55	09/15/2016 05:09	SS
108-67-8	1,3,5-Trimethylbenzene	ND		mg/kg dry	0.0027	0.0054	1	EPA 8260C Certifications: CTDOH,NELAC-NY10854,NJDEP	09/14/2016 18:55	09/15/2016 05:09	SS
541-73-1	1,3-Dichlorobenzene	ND		mg/kg dry	0.0027	0.0054	1	EPA 8260C Certifications: CTDOH,NELAC-NY10854,NJDEP,PADEP	09/14/2016 18:55	09/15/2016 05:09	SS
106-46-7	1,4-Dichlorobenzene	ND		mg/kg dry	0.0027	0.0054	1	EPA 8260C Certifications: CTDOH,NELAC-NY10854,NJDEP,PADEP	09/14/2016 18:55	09/15/2016 05:09	SS
123-91-1	1,4-Dioxane	ND		mg/kg dry	0.054	0.11	1	EPA 8260C Certifications: NELAC-NY10854,NJDEP	09/14/2016 18:55	09/15/2016 05:09	SS
78-93-3	2-Butanone	ND		mg/kg dry	0.0027	0.0054	1	EPA 8260C Certifications: CTDOH,NELAC-NY10854,NJDEP	09/14/2016 18:55	09/15/2016 05:09	SS

Sample Information

Client Sample ID: SB-14-14.5-15.0'

York Sample ID: 16I0323-13

York Project (SDG) No.	Client Project ID	Matrix	Collection Date/Time	Date Received
16I0323	BEGS or OEGS (15-008-0265)	Soil	September 8, 2016 10:50 am	09/09/2016

Volatile Organics, 8260 - Comprehensive

Log-in Notes: VOA-CONT **Sample Notes:** VOA-CONT

Sample Prepared by Method: EPA 5035A

CAS No.	Parameter	Result	Flag	Units	Reported to LOD/MDL	LOQ	Dilution	Reference Method	Date/Time Prepared	Date/Time Analyzed	Analyst
591-78-6	2-Hexanone	ND		mg/kg dry	0.0027	0.0054	1	EPA 8260C Certifications: CTDOH,NELAC-NY10854,NJDEP	09/14/2016 18:55	09/15/2016 05:09	SS
108-10-1	4-Methyl-2-pentanone	ND		mg/kg dry	0.0027	0.0054	1	EPA 8260C Certifications: CTDOH,NELAC-NY10854,NJDEP	09/14/2016 18:55	09/15/2016 05:09	SS
67-64-1	**Acetone**	**0.0054**	J	mg/kg dry	0.0054	0.011	1	EPA 8260C Certifications: CTDOH,NELAC-NY10854,NJDEP	09/14/2016 18:55	09/15/2016 05:09	SS
107-02-8	Acrolein	ND		mg/kg dry	0.0054	0.011	1	EPA 8260C Certifications: CTDOH,NELAC-NY10854,NJDEP	09/14/2016 18:55	09/15/2016 05:09	SS
107-13-1	Acrylonitrile	ND		mg/kg dry	0.0027	0.0054	1	EPA 8260C Certifications: CTDOH,NELAC-NY10854,NJDEP	09/14/2016 18:55	09/15/2016 05:09	SS
71-43-2	Benzene	ND		mg/kg dry	0.0027	0.0054	1	EPA 8260C Certifications: CTDOH,NELAC-NY10854,NJDEP,PADEP	09/14/2016 18:55	09/15/2016 05:09	SS
74-97-5	Bromochloromethane	ND		mg/kg dry	0.0027	0.0054	1	EPA 8260C Certifications: NELAC-NY10854,NJDEP	09/14/2016 18:55	09/15/2016 05:09	SS
[illegible]-4	Bromodichloromethane	ND		mg/kg dry	0.0027	0.0054	1	EPA 8260C Certifications: CTDOH,NELAC-NY10854,NJDEP,PADEP	09/14/2016 18:55	09/15/2016 05:09	SS
75-25-2	Bromoform	ND		mg/kg dry	0.0027	0.0054	1	EPA 8260C Certifications: CTDOH,NELAC-NY10854,NJDEP,PADEP	09/14/2016 18:55	09/15/2016 05:09	SS
74-83-9	Bromomethane	ND		mg/kg dry	0.0027	0.0054	1	EPA 8260C Certifications: CTDOH,NELAC-NY10854,NJDEP,PADEP	09/14/2016 18:55	09/15/2016 05:09	SS
75-15-0	Carbon disulfide	ND		mg/kg dry	0.0027	0.0054	1	EPA 8260C Certifications: CTDOH,NELAC-NY10854,NJDEP	09/14/2016 18:55	09/15/2016 05:09	SS
56-23-5	Carbon tetrachloride	ND		mg/kg dry	0.0027	0.0054	1	EPA 8260C Certifications: CTDOH,NELAC-NY10854,NJDEP,PADEP	09/14/2016 18:55	09/15/2016 05:09	SS
108-90-7	Chlorobenzene	ND		mg/kg dry	0.0027	0.0054	1	EPA 8260C Certifications: CTDOH,NELAC-NY10854,NJDEP,PADEP	09/14/2016 18:55	09/15/2016 05:09	SS
75-00-3	Chloroethane	ND		mg/kg dry	0.0027	0.0054	1	EPA 8260C Certifications: CTDOH,NELAC-NY10854,NJDEP,PADEP	09/14/2016 18:55	09/15/2016 05:09	SS
67-66-3	Chloroform	ND		mg/kg dry	0.0027	0.0054	1	EPA 8260C Certifications: CTDOH,NELAC-NY10854,NJDEP,PADEP	09/14/2016 18:55	09/15/2016 05:09	SS
74-87-3	Chloromethane	ND		mg/kg dry	0.0027	0.0054	1	EPA 8260C Certifications: CTDOH,NELAC-NY10854,NJDEP,PADEP	09/14/2016 18:55	09/15/2016 05:09	SS
156-59-2	cis-1,2-Dichloroethylene	ND		mg/kg dry	0.0027	0.0054	1	EPA 8260C Certifications: CTDOH,NELAC-NY10854,NJDEP	09/14/2016 18:55	09/15/2016 05:09	SS
10061-01-5	cis-1,3-Dichloropropylene	ND		mg/kg dry	0.0027	0.0054	1	EPA 8260C Certifications: CTDOH,NELAC-NY10854,NJDEP,PADEP	09/14/2016 18:55	09/15/2016 05:09	SS
110-82-7	Cyclohexane	ND		mg/kg dry	0.0027	0.0054	1	EPA 8260C Certifications: NELAC-NY10854,NJDEP	09/14/2016 18:55	09/15/2016 05:09	SS
124-48-1	Dibromochloromethane	ND		mg/kg dry	0.0027	0.0054	1	EPA 8260C Certifications: NELAC-NY10854,NJDEP,PADEP	09/14/2016 18:55	09/15/2016 05:09	SS
74-95-3	Dibromomethane	ND		mg/kg dry	0.0027	0.0054	1	EPA 8260C Certifications: NELAC-NY10854,NJDEP	09/14/2016 18:55	09/15/2016 05:09	SS
[illegible]	Dichlorodifluoromethane	ND		mg/kg dry	0.0027	0.0054	1	EPA 8260C Certifications: NELAC-NY10854,NJDEP	09/14/2016 18:55	09/15/2016 05:09	SS

Sample Information

Client Sample ID: SB-14-14.5-15.0'

York Sample ID: 16I0323-13

York Project (SDG) No.	Client Project ID	Matrix	Collection Date/Time	Date Received
16I0323	BEGS or OEGS (15-008-0265)	Soil	September 8, 2016 10:50 am	09/09/2016

Volatile Organics, 8260 - Comprehensive

Log-in Notes: VOA-CONT **Sample Notes:** VOA-CONT

Sample Prepared by Method: EPA 5035A

CAS No.	Parameter	Result	Flag	Units	Reported to LOD/MDL	LOQ	Dilution	Reference Method	Date/Time Prepared	Date/Time Analyzed	Analyst
100-41-4	Ethyl Benzene	ND		mg/kg dry	0.0027	0.0054	1	EPA 8260C Certifications: CTDOH,NELAC-NY10854,NJDEP,PADEP	09/14/2016 18:55	09/15/2016 05:09	SS
87-68-3	Hexachlorobutadiene	ND		mg/kg dry	0.0027	0.0054	1	EPA 8260C Certifications: NELAC-NY10854,NJDEP	09/14/2016 18:55	09/15/2016 05:09	SS
98-82-8	Isopropylbenzene	ND		mg/kg dry	0.0027	0.0054	1	EPA 8260C Certifications: CTDOH,NELAC-NY10854,NJDEP	09/14/2016 18:55	09/15/2016 05:09	SS
79-20-9	Methyl acetate	ND		mg/kg dry	0.0027	0.0054	1	EPA 8260C Certifications: NELAC-NY10854,NJDEP	09/14/2016 18:55	09/15/2016 05:09	SS
1634-04-4	Methyl tert-butyl ether (MTBE)	ND		mg/kg dry	0.0027	0.0054	1	EPA 8260C Certifications: CTDOH,NELAC-NY10854,NJDEP	09/14/2016 18:55	09/15/2016 05:09	SS
108-87-2	Methylcyclohexane	ND		mg/kg dry	0.0027	0.0054	1	EPA 8260C Certifications: NELAC-NY10854,NJDEP	09/14/2016 18:55	09/15/2016 05:09	SS
75-09-2	Methylene chloride	ND		mg/kg dry	0.0054	0.011	1	EPA 8260C Certifications: CTDOH,NELAC-NY10854,NJDEP,PADEP	09/14/2016 18:55	09/15/2016 05:09	SS
104-51-8	n-Butylbenzene	ND		mg/kg dry	0.0027	0.0054	1	EPA 8260C Certifications: CTDOH,NELAC-NY10854,NJDEP	09/14/2016 18:55	09/15/2016 05:09	SS
103-65-1	n-Propylbenzene	ND		mg/kg dry	0.0027	0.0054	1	EPA 8260C Certifications: CTDOH,NELAC-NY10854,NJDEP	09/14/2016 18:55	09/15/2016 05:09	SS
95-47-6	o-Xylene	ND		mg/kg dry	0.0027	0.0054	1	EPA 8260C Certifications: CTDOH,NELAC-NY10854	09/14/2016 18:55	09/15/2016 05:09	SS
179601-23-1	p- & m- Xylenes	ND		mg/kg dry	0.0054	0.011	1	EPA 8260C Certifications: CTDOH,NELAC-NY10854	09/14/2016 18:55	09/15/2016 05:09	SS
99-87-6	p-Isopropyltoluene	ND		mg/kg dry	0.0027	0.0054	1	EPA 8260C Certifications: CTDOH,NELAC-NY10854,NJDEP	09/14/2016 18:55	09/15/2016 05:09	SS
135-98-8	sec-Butylbenzene	ND		mg/kg dry	0.0027	0.0054	1	EPA 8260C Certifications: CTDOH,NELAC-NY10854,NJDEP	09/14/2016 18:55	09/15/2016 05:09	SS
100-42-5	Styrene	ND		mg/kg dry	0.0027	0.0054	1	EPA 8260C Certifications: CTDOH,NELAC-NY10854,NJDEP	09/14/2016 18:55	09/15/2016 05:09	SS
75-65-0	tert-Butyl alcohol (TBA)	ND		mg/kg dry	0.0027	0.0054	1	EPA 8260C Certifications: NELAC-NY10854,NJDEP	09/14/2016 18:55	09/15/2016 05:09	SS
98-06-6	tert-Butylbenzene	ND		mg/kg dry	0.0027	0.0054	1	EPA 8260C Certifications: CTDOH,NELAC-NY10854,NJDEP	09/14/2016 18:55	09/15/2016 05:09	SS
127-18-4	Tetrachloroethylene	ND		mg/kg dry	0.0027	0.0054	1	EPA 8260C Certifications: CTDOH,NELAC-NY10854,NJDEP,PADEP	09/14/2016 18:55	09/15/2016 05:09	SS
108-88-3	Toluene	ND		mg/kg dry	0.0027	0.0054	1	EPA 8260C Certifications: CTDOH,NELAC-NY10854,NJDEP,PADEP	09/14/2016 18:55	09/15/2016 05:09	SS
156-60-5	trans-1,2-Dichloroethylene	ND		mg/kg dry	0.0027	0.0054	1	EPA 8260C Certifications: CTDOH,NELAC-NY10854,NJDEP	09/14/2016 18:55	09/15/2016 05:09	SS
10061-02-6	trans-1,3-Dichloropropylene	ND		mg/kg dry	0.0027	0.0054	1	EPA 8260C Certifications: CTDOH,NELAC-NY10854,NJDEP,PADEP	09/14/2016 18:55	09/15/2016 05:09	SS
79-01-6	Trichloroethylene	ND		mg/kg dry	0.0027	0.0054	1	EPA 8260C Certifications: CTDOH,NELAC-NY10854,NJDEP,PADEP	09/14/2016 18:55	09/15/2016 05:09	SS
75-69-4	Trichlorofluoromethane	ND		mg/kg dry	0.0027	0.0054	1	EPA 8260C Certifications: CTDOH,NELAC-NY10854,NJDEP,PADEP	09/14/2016 18:55	09/15/2016 05:09	SS

Sample Information

Client Sample ID: SB-14-14.5-15.0' **York Sample ID:** 16I0323-13

York Project (SDG) No.	Client Project ID	Matrix	Collection Date/Time	Date Received
16I0323	BEGS or OEGS (15-008-0265)	Soil	September 8, 2016 10:50 am	09/09/2016

Volatile Organics, 8260 - Comprehensive

Log-in Notes: VOA-CONT **Sample Notes:** VOA-CONT

Sample Prepared by Method: EPA 5035A

CAS No.	Parameter	Result	Flag	Units	Reported to LOD/MDL	LOQ	Dilution	Reference Method	Date/Time Prepared	Date/Time Analyzed	Analyst
75-01-4	Vinyl Chloride	ND		mg/kg dry	0.0027	0.0054	1	EPA 8260C Certifications: CTDOH,NELAC-NY10854,NJDEP,PADEP	09/14/2016 18:55	09/15/2016 05:09	SS
1330-20-7	Xylenes, Total	ND		mg/kg dry	0.0081	0.016	1	EPA 8260C Certifications: CTDOH,NELAC-NY10854,NJDEP,PADEP	09/14/2016 18:55	09/15/2016 05:09	SS

	Surrogate Recoveries	Result	Acceptance Range
17060-07-0	*Surrogate: 1,2-Dichloroethane-d4*	*93.9 %*	*77-125*
2037-26-5	*Surrogate: Toluene-d8*	*98.6 %*	*85-120*
460-00-4	*Surrogate: p-Bromofluorobenzene*	*102 %*	*76-130*

Total Solids

Log-in Notes: VOA-CONT **Sample Notes:**

Sample Prepared by Method: % Solids Prep

CAS No.	Parameter	Result	Flag	Units	LOD/MDL	Reported to LOQ	Dilution	Reference Method	Date/Time Prepared	Date/Time Analyzed	Analyst
[illegible]s	*** % Solids**	**92.6**		%	0.100	0.100	1	SM 2540G Certifications: CTDOH	09/15/2016 08:06	09/15/2016 15:16	LAB

Sample Information

Client Sample ID: SB-14-Comp **York Sample ID:** 16I0323-14

York Project (SDG) No.	Client Project ID	Matrix	Collection Date/Time	Date Received
16I0323	BEGS or OEGS (15-008-0265)	Soil	September 8, 2016 10:55 am	09/09/2016

Semi-Volatiles, PAH Target List

Log-in Notes: VOA-CONT **Sample Notes:**

Sample Prepared by Method: EPA 3550C

CAS No.	Parameter	Result	Flag	Units	Reported to LOD/MDL	LOQ	Dilution	Reference Method	Date/Time Prepared	Date/Time Analyzed	Analyst
91-57-6	2-Methylnaphthalene	ND		mg/kg dry	0.0472	0.0941	2	EPA 8270D Certifications: CTDOH,NELAC-NY10854,NJDEP,PADEP	09/15/2016 08:12	09/16/2016 13:46	KH
83-32-9	Acenaphthene	ND		mg/kg dry	0.0472	0.0941	2	EPA 8270D Certifications: CTDOH,NELAC-NY10854,NJDEP,PADEP	09/15/2016 08:12	09/16/2016 13:46	KH
208-96-8	Acenaphthylene	ND		mg/kg dry	0.0472	0.0941	2	EPA 8270D Certifications: CTDOH,NELAC-NY10854,NJDEP,PADEP	09/15/2016 08:12	09/16/2016 13:46	KH
120-12-7	Anthracene	ND		mg/kg dry	0.0472	0.0941	2	EPA 8270D Certifications: CTDOH,NELAC-NY10854,NJDEP,PADEP	09/15/2016 08:12	09/16/2016 13:46	KH
56-55-3	Benzo(a)anthracene	ND		mg/kg dry	0.0472	0.0941	2	EPA 8270D Certifications: CTDOH,NELAC-NY10854,NJDEP,PADEP	09/15/2016 08:12	09/16/2016 13:46	KH
50-32-8	Benzo(a)pyrene	ND		mg/kg dry	0.0472	0.0941	2	EPA 8270D Certifications: CTDOH,NELAC-NY10854,NJDEP,PADEP	09/15/2016 08:12	09/16/2016 13:46	KH
[illegible]99-2	Benzo(b)fluoranthene	ND		mg/kg dry	0.0472	0.0941	2	EPA 8270D Certifications: CTDOH,NELAC-NY10854,NJDEP,PADEP	09/15/2016 08:12	09/16/2016 13:46	KH

Sample Information

Client Sample ID: SB-14-Comp

York Sample ID: 16I0323-14

York Project (SDG) No.	Client Project ID	Matrix	Collection Date/Time	Date Received
16I0323	BEGS or OEGS (15-008-0265)	Soil	September 8, 2016 10:55 am	09/09/2016

Semi-Volatiles, PAH Target List

Log-in Notes: VOA-CONT **Sample Notes:**

Sample Prepared by Method: EPA 3550C

CAS No.	Parameter	Result	Flag	Units	Reported to LOD/MDL	LOQ	Dilution	Reference Method	Date/Time Prepared	Date/Time Analyzed	Analyst
191-24-2	Benzo(g,h,i)perylene	ND		mg/kg dry	0.0472	0.0941	2	EPA 8270D	09/15/2016 08:12	09/16/2016 13:46	KH
								Certifications:	CTDOH,NELAC-NY10854,NJDEP,PADEP		
207-08-9	Benzo(k)fluoranthene	ND		mg/kg dry	0.0472	0.0941	2	EPA 8270D	09/15/2016 08:12	09/16/2016 13:46	KH
								Certifications:	CTDOH,NELAC-NY10854,NJDEP,PADEP		
218-01-9	Chrysene	ND		mg/kg dry	0.0472	0.0941	2	EPA 8270D	09/15/2016 08:12	09/16/2016 13:46	KH
								Certifications:	CTDOH,NELAC-NY10854,NJDEP,PADEP		
53-70-3	Dibenzo(a,h)anthracene	ND		mg/kg dry	0.0472	0.0941	2	EPA 8270D	09/15/2016 08:12	09/16/2016 13:46	KH
								Certifications:	CTDOH,NELAC-NY10854,NJDEP,PADEP		
206-44-0	Fluoranthene	ND		mg/kg dry	0.0472	0.0941	2	EPA 8270D	09/15/2016 08:12	09/16/2016 13:46	KH
								Certifications:	CTDOH,NELAC-NY10854,NJDEP,PADEP		
86-73-7	Fluorene	ND		mg/kg dry	0.0472	0.0941	2	EPA 8270D	09/15/2016 08:12	09/16/2016 13:46	KH
								Certifications:	NELAC-NY10854,NJDEP,PADEP		
193-39-5	Indeno(1,2,3-cd)pyrene	ND		mg/kg dry	0.0472	0.0941	2	EPA 8270D	09/15/2016 08:12	09/16/2016 13:46	KH
								Certifications:	CTDOH,NELAC-NY10854,NJDEP,PADEP		
91-20-3	Naphthalene	ND		mg/kg dry	0.0472	0.0941	2	EPA 8270D	09/15/2016 08:12	09/16/2016 13:46	KH
								Certifications:	CTDOH,NELAC-NY10854,NJDEP,PADEP		
85-01-8	Phenanthrene	ND		mg/kg dry	0.0472	0.0941	2	EPA 8270D	09/15/2016 08:12	09/16/2016 13:46	KH
								Certifications:	CTDOH,NELAC-NY10854,NJDEP,PADEP		
129-00-0	Pyrene	ND		mg/kg dry	0.0472	0.0941	2	EPA 8270D	09/15/2016 08:12	09/16/2016 13:46	KH
								Certifications:	CTDOH,NELAC-NY10854,NJDEP,PADEP		

	Surrogate Recoveries	Result	Acceptance Range
4165-60-0	*Surrogate: Nitrobenzene-d5*	*48.9 %*	*22-108*
321-60-8	*Surrogate: 2-Fluorobiphenyl*	*64.0 %*	*21-113*
1718-51-0	*Surrogate: Terphenyl-d14*	*52.0 %*	*24-116*

Polychlorinated Biphenyls (PCB)

Log-in Notes: VOA-CONT **Sample Notes:**

Sample Prepared by Method: EPA 3550C

CAS No.	Parameter	Result	Flag	Units	LOD/MDL	Reported to LOQ	Dilution	Reference Method	Date/Time Prepared	Date/Time Analyzed	Analyst
12674-11-2	Aroclor 1016	ND		mg/kg dry	0.0188	0.0188	1	EPA 8082A	09/13/2016 09:10	09/14/2016 01:01	AMC
								Certifications:	NELAC-NY10854,CTDOH,NJDEP,PADEP		
11104-28-2	Aroclor 1221	ND		mg/kg dry	0.0188	0.0188	1	EPA 8082A	09/13/2016 09:10	09/14/2016 01:01	AMC
								Certifications:	NELAC-NY10854,CTDOH,NJDEP,PADEP		
11141-16-5	Aroclor 1232	ND		mg/kg dry	0.0188	0.0188	1	EPA 8082A	09/13/2016 09:10	09/14/2016 01:01	AMC
								Certifications:	NELAC-NY10854,CTDOH,NJDEP,PADEP		
53469-21-9	Aroclor 1242	ND		mg/kg dry	0.0188	0.0188	1	EPA 8082A	09/13/2016 09:10	09/14/2016 01:01	AMC
								Certifications:	NELAC-NY10854,CTDOH,NJDEP,PADEP		
12672-29-6	Aroclor 1248	ND		mg/kg dry	0.0188	0.0188	1	EPA 8082A	09/13/2016 09:10	09/14/2016 01:01	AMC
								Certifications:	NELAC-NY10854,CTDOH,NJDEP,PADEP		
11097-69-1	Aroclor 1254	ND		mg/kg dry	0.0188	0.0188	1	EPA 8082A	09/13/2016 09:10	09/14/2016 01:01	AMC
								Certifications:	NELAC-NY10854,CTDOH,NJDEP,PADEP		
11096-82-5	Aroclor 1260	ND		mg/kg dry	0.0188	0.0188	1	EPA 8082A	09/13/2016 09:10	09/14/2016 01:01	AMC
								Certifications:	NELAC-NY10854,CTDOH,NJDEP,PADEP		

Sample Information

Client Sample ID: SB-14-Comp

York Sample ID: 16I0323-14

York Project (SDG) No.	Client Project ID	Matrix	Collection Date/Time	Date Received
16I0323	BEGS or OEGS (15-008-0265)	Soil	September 8, 2016 10:55 am	09/09/2016

Polychlorinated Biphenyls (PCB)

Log-in Notes: VOA-CONT **Sample Notes:**

Sample Prepared by Method: EPA 3550C

CAS No.	Parameter	Result	Flag	Units	LOD/MDL	Reported to LOQ	Dilution	Reference Method	Date/Time Prepared	Date/Time Analyzed	Analyst
1336-36-3	* Total PCBs	ND		mg/kg dry	0.0188	0.0188	1	EPA 8082A Certifications:	09/13/2016 09:10	09/14/2016 01:01	AMC

	Surrogate Recoveries	Result	Acceptance Range
877-09-8	*Surrogate: Tetrachloro-m-xylene*	*59.0 %*	*30-140*
2051-24-3	*Surrogate: Decachlorobiphenyl*	*51.5 %*	*30-140*

Total Petroleum Hydrocarbons-DRO (C10-C28)

Log-in Notes: VOA-CONT **Sample Notes:**

Sample Prepared by Method: EPA 3550C

CAS No.	Parameter	Result	Flag	Units	LOD/MDL	Reported to LOQ	Dilution	Reference Method	Date/Time Prepared	Date/Time Analyzed	Analyst
	Total Petroleum Hydrocarbons-DRO	ND		mg/kg dry	3.84	11.3	1	EPA 8015D Certifications: NELAC-NY10854,NJDEP,PADEP	09/15/2016 07:34	09/15/2016 21:26	AMC

	Surrogate Recoveries	Result	Acceptance Range
68-6	*Surrogate: Triacontane*	*58.5 %*	*30-150*

Total Petroleum Hydrocarbons-GRO (C5-C10)

Log-in Notes: VOA-CONT **Sample Notes:**

Sample Prepared by Method: EPA 5035A

CAS No.	Parameter	Result	Flag	Units	LOD/MDL	Reported to LOQ	Dilution	Reference Method	Date/Time Prepared	Date/Time Analyzed	Analyst
	Total Petroleum Hydrocarbons-GRO	ND		mg/kg dry	45.1	90.3	100	EPA 8015D Certifications: NELAC-NY10854,NJDEP,PADEP	09/14/2016 08:58	09/14/2016 21:19	OW

	Surrogate Recoveries	Result	Acceptance Range
460-00-4	*Surrogate: p-Bromofluorobenzene*	*89.4 %*	*70-130*

Metals, TCLP RCRA

Log-in Notes: VOA-CONT **Sample Notes:**

Sample Prepared by Method: EPA 3015A/1311

CAS No.	Parameter	Result	Flag	Units	LOD/MDL	Reported to LOQ	Dilution	Reference Method	Date/Time Prepared	Date/Time Analyzed	Analyst
7440-38-2	Arsenic	ND		mg/L	0.004	0.004	1	EPA 6010C/1311 Certifications: CTDOH,NELAC-NY10854,NJDEP,PADEP	09/13/2016 12:22	09/14/2016 06:27	KV
7440-39-3	**Barium**	**0.360**		mg/L	0.011	0.011	1	EPA 6010C/1311 Certifications: CTDOH,NELAC-NY10854,NJDEP,PADEP	09/13/2016 12:22	09/14/2016 06:27	KV
7440-43-9	Cadmium	ND		mg/L	0.003	0.003	1	EPA 6010C/1311 Certifications: CTDOH,NELAC-NY10854,NJDEP,PADEP	09/13/2016 12:22	09/14/2016 06:27	KV
7440-47-3	Chromium	ND		mg/L	0.006	0.006	1	EPA 6010C/1311 Certifications: CTDOH,NELAC-NY10854,NJDEP,PADEP	09/13/2016 12:22	09/14/2016 06:27	KV
7439-92-1	**Lead**	**0.093**		mg/L	0.003	0.003	1	EPA 6010C/1311 Certifications: CTDOH,NELAC-NY10854,NJDEP,PADEP	09/13/2016 12:22	09/14/2016 06:27	KV
7782-49-2	**Selenium**	**0.022**	M-SeT C, B	mg/L	0.011	0.011	1	EPA 6010C/1311 Certifications: CTDOH,NELAC-NY10854,NJDEP,PADEP	09/13/2016 12:22	09/14/2016 06:27	KV
22-4	Silver	ND		mg/L	0.006	0.006	1	EPA 6010C/1311 Certifications: CTDOH,NELAC-NY10854,NJDEP,PADEP	09/13/2016 12:22	09/14/2016 06:27	KV

Sample Information

Client Sample ID: SB-14-Comp

York Sample ID: 16I0323-14

York Project (SDG) No.	Client Project ID	Matrix	Collection Date/Time	Date Received
16I0323	BEGS or OEGS (15-008-0265)	Soil	September 8, 2016 10:55 am	09/09/2016

Mercury TCLP by 7473

Log-in Notes: VOA-CONT **Sample Notes:**

Sample Prepared by Method: EPA 7473 water

CAS No.	Parameter	Result	Flag	Units	LOD/MDL	Reported to LOQ	Dilution	Reference Method	Date/Time Prepared	Date/Time Analyzed	Analyst
7439-97-6	Mercury	ND		mg/L	0.0000390	0.000200	1	EPA 7473/1311	09/13/2016 12:33	09/14/2016 06:59	ALD

Certifications: CTDOH,NJDEP,PADEP,NELAC-NY10854

Ignitability

Log-in Notes: VOA-CONT **Sample Notes:**

Sample Prepared by Method: Analysis Preparation

CAS No.	Parameter	Result	Flag	Units	LOD/MDL	Reported to LOQ	Dilution	Reference Method	Date/Time Prepared	Date/Time Analyzed	Analyst
	* Ignitability	Non-Ignit.		-	1	1	1	EPA 1030P	09/13/2016 14:36	09/13/2016 14:58	AD

Certifications: CTDOH,PADEP

Total Solids

Log-in Notes: VOA-CONT **Sample Notes:**

Sample Prepared by Method: % Solids Prep

CAS No.	Parameter	Result	Flag	Units	LOD/MDL	Reported to LOQ	Dilution	Reference Method	Date/Time Prepared	Date/Time Analyzed	Analyst
solids	*** % Solids**	**88.6**		%	0.100	0.100	1	SM 2540G	09/15/2016 08:06	09/15/2016 15:16	LAB

Certifications: CTDOH

Corrosivity

Log-in Notes: VOA-CONT **Sample Notes:**

Sample Prepared by Method: Analysis Preparation

CAS No.	Parameter	Result	Flag	Units	LOD/MDL	Reported to LOQ	Dilution	Reference Method	Date/Time Prepared	Date/Time Analyzed	Analyst
	pH	**7.02**	HT-pH	pH units		0.500	1	EPA 9045D	09/13/2016 11:58	09/13/2016 14:32	LAB

Certifications: NELAC-NY10854,CTDOH,PADEP

Reactivity-Cyanide

Log-in Notes: VOA-CONT **Sample Notes:**

Sample Prepared by Method: Analysis Preparation

CAS No.	Parameter	Result	Flag	Units	LOD/MDL	Reported to LOQ	Dilution	Reference Method	Date/Time Prepared	Date/Time Analyzed	Analyst
	* Reactivity - Cyanide	ND		mg/kg	0.250	0.250	1	EPA SW-846 Ch.7.3.3	09/13/2016 08:17	09/13/2016 13:00	AD

Certifications: CTDOH,PADEP

Reactivity-Sulfide

Log-in Notes: VOA-CONT **Sample Notes:**

Sample Prepared by Method: Analysis Preparation

CAS No.	Parameter	Result	Flag	Units	LOD/MDL	Reported to LOQ	Dilution	Reference Method	Date/Time Prepared	Date/Time Analyzed	Analyst
	* Reactivity - Sulfide	ND		mg/kg	15.0	15.0	1	EPA SW-846 Ch.7.3.4	09/13/2016 08:28	09/13/2016 11:55	LAB

Certifications: CTDOH,PADEP

TCLP Extraction for METALS EPA 1311

Log-in Notes: VOA-CONT **Sample Notes:**

Sample Prepared by Method: EPA SW 846-1311 TCLP ext. for metals

CAS No.	Parameter	Result	Flag	Units	LOD/MDL	Reported to LOQ	Dilution	Reference Method	Date/Time Prepared	Date/Time Analyzed	Analyst
	TCLP Extraction	Completed		N/A	1.00	1.00	1	EPA 1311	09/12/2016 18:51	09/13/2016 14:06	TJM

Certifications: NELAC-NY10854,CTDOH,NJDEP,PADEP

Sample Information

Client Sample ID: SB-14-Comp

York Sample ID: 16I0323-14

York Project (SDG) No.	Client Project ID	Matrix	Collection Date/Time	Date Received
16I0323	BEGS or OEGS (15-008-0265)	Soil	September 8, 2016 10:55 am	09/09/2016

Sample Information

Client Sample ID: SB-15-9.0-9.5'

York Sample ID: 16I0323-15

York Project (SDG) No.	Client Project ID	Matrix	Collection Date/Time	Date Received
16I0323	BEGS or OEGS (15-008-0265)	Soil	September 8, 2016 11:50 am	09/09/2016

Volatile Organics, 8260 - Comprehensive

Log-in Notes: VOA-CONT **Sample Notes:** VOA-CONT

Sample Prepared by Method: EPA 5035A

CAS No.	Parameter	Result	Flag	Units	Reported to LOD/MDL	LOQ	Dilution	Reference Method	Date/Time Prepared	Date/Time Analyzed	Analyst
630-20-6	1,1,1,2-Tetrachloroethane	ND		mg/kg dry	0.0029	0.0059	1	EPA 8260C Certifications: CTDOH,NELAC-NY10854,NJDEP	09/15/2016 08:00	09/15/2016 12:52	BK
71-55-6	1,1,1-Trichloroethane	ND		mg/kg dry	0.0029	0.0059	1	EPA 8260C Certifications: CTDOH,NELAC-NY10854,NJDEP,PADEP	09/15/2016 08:00	09/15/2016 12:52	BK
[illegible]4-5	1,1,2,2-Tetrachloroethane	ND		mg/kg dry	0.0029	0.0059	1	EPA 8260C Certifications: CTDOH,NELAC-NY10854,NJDEP,PADEP	09/15/2016 08:00	09/15/2016 12:52	BK
76-13-1	1,1,2-Trichloro-1,2,2-trifluoroethane (Freon 113)	ND		mg/kg dry	0.0029	0.0059	1	EPA 8260C Certifications: CTDOH,NELAC-NY10854,NJDEP	09/15/2016 08:00	09/15/2016 12:52	BK
79-00-5	1,1,2-Trichloroethane	ND		mg/kg dry	0.0029	0.0059	1	EPA 8260C Certifications: CTDOH,NELAC-NY10854,NJDEP,PADEP	09/15/2016 08:00	09/15/2016 12:52	BK
75-34-3	1,1-Dichloroethane	ND		mg/kg dry	0.0029	0.0059	1	EPA 8260C Certifications: CTDOH,NELAC-NY10854,NJDEP,PADEP	09/15/2016 08:00	09/15/2016 12:52	BK
75-35-4	1,1-Dichloroethylene	ND		mg/kg dry	0.0029	0.0059	1	EPA 8260C Certifications: CTDOH,NELAC-NY10854,NJDEP,PADEP	09/15/2016 08:00	09/15/2016 12:52	BK
87-61-6	1,2,3-Trichlorobenzene	ND		mg/kg dry	0.0029	0.0059	1	EPA 8260C Certifications: NELAC-NY10854,NJDEP	09/15/2016 08:00	09/15/2016 12:52	BK
96-18-4	1,2,3-Trichloropropane	ND		mg/kg dry	0.0029	0.0059	1	EPA 8260C Certifications: NELAC-NY10854,NJDEP	09/15/2016 08:00	09/15/2016 12:52	BK
120-82-1	1,2,4-Trichlorobenzene	ND		mg/kg dry	0.0029	0.0059	1	EPA 8260C Certifications: NELAC-NY10854,NJDEP	09/15/2016 08:00	09/15/2016 12:52	BK
95-63-6	1,2,4-Trimethylbenzene	ND		mg/kg dry	0.0029	0.0059	1	EPA 8260C Certifications: CTDOH,NELAC-NY10854,NJDEP	09/15/2016 08:00	09/15/2016 12:52	BK
96-12-8	1,2-Dibromo-3-chloropropane	ND		mg/kg dry	0.0029	0.0059	1	EPA 8260C Certifications: CTDOH,NELAC-NY10854,NJDEP	09/15/2016 08:00	09/15/2016 12:52	BK
106-93-4	1,2-Dibromoethane	ND		mg/kg dry	0.0029	0.0059	1	EPA 8260C Certifications: CTDOH,NELAC-NY10854,NJDEP	09/15/2016 08:00	09/15/2016 12:52	BK
95-50-1	1,2-Dichlorobenzene	ND		mg/kg dry	0.0029	0.0059	1	EPA 8260C Certifications: CTDOH,NELAC-NY10854,NJDEP,PADEP	09/15/2016 08:00	09/15/2016 12:52	BK
107-06-2	1,2-Dichloroethane	ND		mg/kg dry	0.0029	0.0059	1	EPA 8260C Certifications: CTDOH,NELAC-NY10854,NJDEP,PADEP	09/15/2016 08:00	09/15/2016 12:52	BK
78-87-5	1,2-Dichloropropane	ND		mg/kg dry	0.0029	0.0059	1	EPA 8260C Certifications: CTDOH,NELAC-NY10854,NJDEP	09/15/2016 08:00	09/15/2016 12:52	BK
[illegible]7-8	1,3,5-Trimethylbenzene	ND		mg/kg dry	0.0029	0.0059	1	EPA 8260C Certifications: CTDOH,NELAC-NY10854,NJDEP	09/15/2016 08:00	09/15/2016 12:52	BK

Sample Information

Client Sample ID: SB-15-9.0-9.5'

York Sample ID: 16I0323-15

York Project (SDG) No.	Client Project ID	Matrix	Collection Date/Time	Date Received
16I0323	BEGS or OEGS (15-008-0265)	Soil	September 8, 2016 11:50 am	09/09/2016

Volatile Organics, 8260 - Comprehensive

Log-in Notes: VOA-CONT **Sample Notes:** VOA-CONT

Sample Prepared by Method: EPA 5035A

CAS No.	Parameter	Result	Flag	Units	Reported to LOD/MDL	LOQ	Dilution	Reference Method	Date/Time Prepared	Date/Time Analyzed	Analyst
541-73-1	1,3-Dichlorobenzene	ND		mg/kg dry	0.0029	0.0059	1	EPA 8260C Certifications: CTDOH,NELAC-NY10854,NJDEP,PADEP	09/15/2016 08:00	09/15/2016 12:52	BK
106-46-7	1,4-Dichlorobenzene	ND		mg/kg dry	0.0029	0.0059	1	EPA 8260C Certifications: CTDOH,NELAC-NY10854,NJDEP,PADEP	09/15/2016 08:00	09/15/2016 12:52	BK
123-91-1	1,4-Dioxane	ND		mg/kg dry	0.059	0.12	1	EPA 8260C Certifications: NELAC-NY10854,NJDEP	09/15/2016 08:00	09/15/2016 12:52	BK
78-93-3	2-Butanone	ND		mg/kg dry	0.0029	0.0059	1	EPA 8260C Certifications: CTDOH,NELAC-NY10854,NJDEP	09/15/2016 08:00	09/15/2016 12:52	BK
591-78-6	2-Hexanone	ND		mg/kg dry	0.0029	0.0059	1	EPA 8260C Certifications: CTDOH,NELAC-NY10854,NJDEP	09/15/2016 08:00	09/15/2016 12:52	BK
108-10-1	4-Methyl-2-pentanone	ND		mg/kg dry	0.0029	0.0059	1	EPA 8260C Certifications: CTDOH,NELAC-NY10854,NJDEP	09/15/2016 08:00	09/15/2016 12:52	BK
67-64-1	**Acetone**	**0.0073**	SCAL-E, J	mg/kg dry	0.0059	0.012	1	EPA 8260C Certifications: CTDOH,NELAC-NY10854,NJDEP	09/15/2016 08:00	09/15/2016 12:52	BK
107-02-8	Acrolein	ND		mg/kg dry	0.0059	0.012	1	EPA 8260C Certifications: CTDOH,NELAC-NY10854,NJDEP	09/15/2016 08:00	09/15/2016 12:52	BK
107-13-1	Acrylonitrile	ND		mg/kg dry	0.0029	0.0059	1	EPA 8260C Certifications: CTDOH,NELAC-NY10854,NJDEP	09/15/2016 08:00	09/15/2016 12:52	BK
71-43-2	Benzene	ND		mg/kg dry	0.0029	0.0059	1	EPA 8260C Certifications: CTDOH,NELAC-NY10854,NJDEP,PADEP	09/15/2016 08:00	09/15/2016 12:52	BK
74-97-5	Bromochloromethane	ND		mg/kg dry	0.0029	0.0059	1	EPA 8260C Certifications: NELAC-NY10854,NJDEP	09/15/2016 08:00	09/15/2016 12:52	BK
75-27-4	Bromodichloromethane	ND		mg/kg dry	0.0029	0.0059	1	EPA 8260C Certifications: CTDOH,NELAC-NY10854,NJDEP,PADEP	09/15/2016 08:00	09/15/2016 12:52	BK
75-25-2	Bromoform	ND		mg/kg dry	0.0029	0.0059	1	EPA 8260C Certifications: CTDOH,NELAC-NY10854,NJDEP,PADEP	09/15/2016 08:00	09/15/2016 12:52	BK
74-83-9	Bromomethane	ND		mg/kg dry	0.0029	0.0059	1	EPA 8260C Certifications: CTDOH,NELAC-NY10854,NJDEP,PADEP	09/15/2016 08:00	09/15/2016 12:52	BK
75-15-0	Carbon disulfide	ND		mg/kg dry	0.0029	0.0059	1	EPA 8260C Certifications: CTDOH,NELAC-NY10854,NJDEP	09/15/2016 08:00	09/15/2016 12:52	BK
56-23-5	Carbon tetrachloride	ND		mg/kg dry	0.0029	0.0059	1	EPA 8260C Certifications: CTDOH,NELAC-NY10854,NJDEP,PADEP	09/15/2016 08:00	09/15/2016 12:52	BK
108-90-7	Chlorobenzene	ND		mg/kg dry	0.0029	0.0059	1	EPA 8260C Certifications: CTDOH,NELAC-NY10854,NJDEP,PADEP	09/15/2016 08:00	09/15/2016 12:52	BK
75-00-3	Chloroethane	ND		mg/kg dry	0.0029	0.0059	1	EPA 8260C Certifications: CTDOH,NELAC-NY10854,NJDEP,PADEP	09/15/2016 08:00	09/15/2016 12:52	BK
67-66-3	Chloroform	ND		mg/kg dry	0.0029	0.0059	1	EPA 8260C Certifications: CTDOH,NELAC-NY10854,NJDEP,PADEP	09/15/2016 08:00	09/15/2016 12:52	BK
74-87-3	Chloromethane	ND		mg/kg dry	0.0029	0.0059	1	EPA 8260C Certifications: CTDOH,NELAC-NY10854,NJDEP,PADEP	09/15/2016 08:00	09/15/2016 12:52	BK
156-59-2	cis-1,2-Dichloroethylene	ND		mg/kg dry	0.0029	0.0059	1	EPA 8260C Certifications: CTDOH,NELAC-NY10854,NJDEP	09/15/2016 08:00	09/15/2016 12:52	BK
10061-01-5	cis-1,3-Dichloropropylene	ND		mg/kg dry	0.0029	0.0059	1	EPA 8260C Certifications: CTDOH,NELAC-NY10854,NJDEP,PADEP	09/15/2016 08:00	09/15/2016 12:52	BK

Sample Information

Client Sample ID: SB-15-9.0-9.5' **York Sample ID:** 16I0323-15

York Project (SDG) No.	Client Project ID	Matrix	Collection Date/Time	Date Received
16I0323	BEGS or OEGS (15-008-0265)	Soil	September 8, 2016 11:50 am	09/09/2016

Volatile Organics, 8260 - Comprehensive

Log-in Notes: VOA-CONT **Sample Notes:** VOA-CONT

Sample Prepared by Method: EPA 5035A

CAS No.	Parameter	Result	Flag	Units	Reported to LOD/MDL	LOQ	Dilution	Reference Method	Date/Time Prepared	Date/Time Analyzed	Analyst
110-82-7	Cyclohexane	ND		mg/kg dry	0.0029	0.0059	1	EPA 8260C Certifications: NELAC-NY10854,NJDEP	09/15/2016 08:00	09/15/2016 12:52	BK
124-48-1	Dibromochloromethane	ND		mg/kg dry	0.0029	0.0059	1	EPA 8260C Certifications: NELAC-NY10854,NJDEP,PADEP	09/15/2016 08:00	09/15/2016 12:52	BK
74-95-3	Dibromomethane	ND		mg/kg dry	0.0029	0.0059	1	EPA 8260C Certifications: NELAC-NY10854,NJDEP	09/15/2016 08:00	09/15/2016 12:52	BK
75-71-8	Dichlorodifluoromethane	ND		mg/kg dry	0.0029	0.0059	1	EPA 8260C Certifications: NELAC-NY10854,NJDEP	09/15/2016 08:00	09/15/2016 12:52	BK
100-41-4	Ethyl Benzene	ND		mg/kg dry	0.0029	0.0059	1	EPA 8260C Certifications: CTDOH,NELAC-NY10854,NJDEP,PADEP	09/15/2016 08:00	09/15/2016 12:52	BK
87-68-3	Hexachlorobutadiene	ND		mg/kg dry	0.0029	0.0059	1	EPA 8260C Certifications: NELAC-NY10854,NJDEP	09/15/2016 08:00	09/15/2016 12:52	BK
98-82-8	Isopropylbenzene	ND		mg/kg dry	0.0029	0.0059	1	EPA 8260C Certifications: CTDOH,NELAC-NY10854,NJDEP	09/15/2016 08:00	09/15/2016 12:52	BK
[illegible]0-9	Methyl acetate	ND		mg/kg dry	0.0029	0.0059	1	EPA 8260C Certifications: NELAC-NY10854,NJDEP	09/15/2016 08:00	09/15/2016 12:52	BK
1634-04-4	Methyl tert-butyl ether (MTBE)	ND		mg/kg dry	0.0029	0.0059	1	EPA 8260C Certifications: CTDOH,NELAC-NY10854,NJDEP	09/15/2016 08:00	09/15/2016 12:52	BK
108-87-2	Methylcyclohexane	ND		mg/kg dry	0.0029	0.0059	1	EPA 8260C Certifications: NELAC-NY10854,NJDEP	09/15/2016 08:00	09/15/2016 12:52	BK
75-09-2	Methylene chloride	ND		mg/kg dry	0.0059	0.012	1	EPA 8260C Certifications: CTDOH,NELAC-NY10854,NJDEP,PADEP	09/15/2016 08:00	09/15/2016 12:52	BK
104-51-8	n-Butylbenzene	ND		mg/kg dry	0.0029	0.0059	1	EPA 8260C Certifications: CTDOH,NELAC-NY10854,NJDEP	09/15/2016 08:00	09/15/2016 12:52	BK
103-65-1	n-Propylbenzene	ND		mg/kg dry	0.0029	0.0059	1	EPA 8260C Certifications: CTDOH,NELAC-NY10854,NJDEP	09/15/2016 08:00	09/15/2016 12:52	BK
95-47-6	o-Xylene	ND		mg/kg dry	0.0029	0.0059	1	EPA 8260C Certifications: CTDOH,NELAC-NY10854	09/15/2016 08:00	09/15/2016 12:52	BK
179601-23-1	p- & m- Xylenes	ND		mg/kg dry	0.0059	0.012	1	EPA 8260C Certifications: CTDOH,NELAC-NY10854	09/15/2016 08:00	09/15/2016 12:52	BK
99-87-6	p-Isopropyltoluene	ND		mg/kg dry	0.0029	0.0059	1	EPA 8260C Certifications: CTDOH,NELAC-NY10854,NJDEP	09/15/2016 08:00	09/15/2016 12:52	BK
135-98-8	sec-Butylbenzene	ND		mg/kg dry	0.0029	0.0059	1	EPA 8260C Certifications: CTDOH,NELAC-NY10854,NJDEP	09/15/2016 08:00	09/15/2016 12:52	BK
100-42-5	Styrene	ND		mg/kg dry	0.0029	0.0059	1	EPA 8260C Certifications: CTDOH,NELAC-NY10854,NJDEP	09/15/2016 08:00	09/15/2016 12:52	BK
75-65-0	tert-Butyl alcohol (TBA)	ND		mg/kg dry	0.0029	0.012	1	EPA 8260C Certifications: NELAC-NY10854,NJDEP	09/15/2016 08:00	09/15/2016 12:52	BK
98-06-6	tert-Butylbenzene	ND		mg/kg dry	0.0029	0.0059	1	EPA 8260C Certifications: CTDOH,NELAC-NY10854,NJDEP	09/15/2016 08:00	09/15/2016 12:52	BK
127-18-4	Tetrachloroethylene	ND		mg/kg dry	0.0029	0.0059	1	EPA 8260C Certifications: CTDOH,NELAC-NY10854,NJDEP,PADEP	09/15/2016 08:00	09/15/2016 12:52	BK
[illegible]88-3	Toluene	ND		mg/kg dry	0.0029	0.0059	1	EPA 8260C Certifications: CTDOH,NELAC-NY10854,NJDEP,PADEP	09/15/2016 08:00	09/15/2016 12:52	BK

Sample Information

Client Sample ID: SB-15-9.0-9.5' **York Sample ID:** 16I0323-15

York Project (SDG) No.	Client Project ID	Matrix	Collection Date/Time	Date Received
16I0323	BEGS or OEGS (15-008-0265)	Soil	September 8, 2016 11:50 am	09/09/2016

Volatile Organics, 8260 - Comprehensive

Log-in Notes: VOA-CONT **Sample Notes:** VOA-CONT

Sample Prepared by Method: EPA 5035A

CAS No.	Parameter	Result	Flag	Units	Reported to LOD/MDL	LOQ	Dilution	Reference Method	Date/Time Prepared	Date/Time Analyzed	Analyst
156-60-5	trans-1,2-Dichloroethylene	ND		mg/kg dry	0.0029	0.0059	1	EPA 8260C Certifications: CTDOH,NELAC-NY10854,NJDEP	09/15/2016 08:00	09/15/2016 12:52	BK
10061-02-6	trans-1,3-Dichloropropylene	ND		mg/kg dry	0.0029	0.0059	1	EPA 8260C Certifications: CTDOH,NELAC-NY10854,NJDEP,PADEP	09/15/2016 08:00	09/15/2016 12:52	BK
79-01-6	Trichloroethylene	ND		mg/kg dry	0.0029	0.0059	1	EPA 8260C Certifications: CTDOH,NELAC-NY10854,NJDEP,PADEP	09/15/2016 08:00	09/15/2016 12:52	BK
75-69-4	Trichlorofluoromethane	ND		mg/kg dry	0.0029	0.0059	1	EPA 8260C Certifications: CTDOH,NELAC-NY10854,NJDEP,PADEP	09/15/2016 08:00	09/15/2016 12:52	BK
75-01-4	Vinyl Chloride	ND		mg/kg dry	0.0029	0.0059	1	EPA 8260C Certifications: CTDOH,NELAC-NY10854,NJDEP,PADEP	09/15/2016 08:00	09/15/2016 12:52	BK
1330-20-7	Xylenes, Total	ND		mg/kg dry	0.0088	0.018	1	EPA 8260C Certifications: CTDOH,NELAC-NY10854,NJDEP,PADEP	09/15/2016 08:00	09/15/2016 12:52	BK

	Surrogate Recoveries	Result	Acceptance Range
17060-07-0	*Surrogate: 1,2-Dichloroethane-d4*	*91.9 %*	*77-125*
2037-26-5	*Surrogate: Toluene-d8*	*98.5 %*	*85-120*
460-00-4	*Surrogate: p-Bromofluorobenzene*	*103 %*	*76-130*

Total Solids

Log-in Notes: VOA-CONT **Sample Notes:**

Sample Prepared by Method: % Solids Prep

CAS No.	Parameter	Result	Flag	Units	LOD/MDL	Reported to LOQ	Dilution	Reference Method	Date/Time Prepared	Date/Time Analyzed	Analyst
solids	*** % Solids**	**85.0**		%	0.100	0.100	1	SM 2540G Certifications: CTDOH	09/15/2016 08:06	09/15/2016 15:16	LAB

Sample Information

Client Sample ID: SB-15-Comp **York Sample ID:** 16I0323-16

York Project (SDG) No.	Client Project ID	Matrix	Collection Date/Time	Date Received
16I0323	BEGS or OEGS (15-008-0265)	Soil	September 8, 2016 12:00 pm	09/09/2016

Semi-Volatiles, PAH Target List

Log-in Notes: VOA-CONT **Sample Notes:**

Sample Prepared by Method: EPA 3550C

CAS No.	Parameter	Result	Flag	Units	Reported to LOD/MDL	LOQ	Dilution	Reference Method	Date/Time Prepared	Date/Time Analyzed	Analyst
91-57-6	2-Methylnaphthalene	ND		mg/kg dry	0.0450	0.0897	2	EPA 8270D Certifications: CTDOH,NELAC-NY10854,NJDEP,PADEP	09/15/2016 08:12	09/15/2016 17:13	KH
83-32-9	Acenaphthene	ND		mg/kg dry	0.0450	0.0897	2	EPA 8270D Certifications: CTDOH,NELAC-NY10854,NJDEP,PADEP	09/15/2016 08:12	09/15/2016 17:13	KH
208-96-8	Acenaphthylene	ND		mg/kg dry	0.0450	0.0897	2	EPA 8270D Certifications: CTDOH,NELAC-NY10854,NJDEP,PADEP	09/15/2016 08:12	09/15/2016 17:13	KH

Sample Information

Client Sample ID: SB-15-Comp

York Sample ID: 16I0323-16

York Project (SDG) No.	Client Project ID	Matrix	Collection Date/Time	Date Received
16I0323	BEGS or OEGS (15-008-0265)	Soil	September 8, 2016 12:00 pm	09/09/2016

Semi-Volatiles, PAH Target List

Log-in Notes: VOA-CONT **Sample Notes:**

Sample Prepared by Method: EPA 3550C

CAS No.	Parameter	Result	Flag	Units	Reported to LOD/MDL	LOQ	Dilution	Reference Method	Date/Time Prepared	Date/Time Analyzed	Analyst
120-12-7	Anthracene	ND		mg/kg dry	0.0450	0.0897	2	EPA 8270D Certifications:	09/15/2016 08:12 CTDOH,NELAC-NY10854,NJDEP,PADEP	09/15/2016 17:13	KH
56-55-3	Benzo(a)anthracene	ND		mg/kg dry	0.0450	0.0897	2	EPA 8270D Certifications:	09/15/2016 08:12 CTDOH,NELAC-NY10854,NJDEP,PADEP	09/15/2016 17:13	KH
50-32-8	Benzo(a)pyrene	ND		mg/kg dry	0.0450	0.0897	2	EPA 8270D Certifications:	09/15/2016 08:12 CTDOH,NELAC-NY10854,NJDEP,PADEP	09/15/2016 17:13	KH
205-99-2	Benzo(b)fluoranthene	ND		mg/kg dry	0.0450	0.0897	2	EPA 8270D Certifications:	09/15/2016 08:12 CTDOH,NELAC-NY10854,NJDEP,PADEP	09/15/2016 17:13	KH
191-24-2	Benzo(g,h,i)perylene	ND		mg/kg dry	0.0450	0.0897	2	EPA 8270D Certifications:	09/15/2016 08:12 CTDOH,NELAC-NY10854,NJDEP,PADEP	09/15/2016 17:13	KH
207-08-9	Benzo(k)fluoranthene	ND		mg/kg dry	0.0450	0.0897	2	EPA 8270D Certifications:	09/15/2016 08:12 CTDOH,NELAC-NY10854,NJDEP,PADEP	09/15/2016 17:13	KH
218-01-9	Chrysene	ND		mg/kg dry	0.0450	0.0897	2	EPA 8270D Certifications:	09/15/2016 08:12 CTDOH,NELAC-NY10854,NJDEP,PADEP	09/15/2016 17:13	KH
[illegible]0-3	Dibenzo(a,h)anthracene	ND		mg/kg dry	0.0450	0.0897	2	EPA 8270D Certifications:	09/15/2016 08:12 CTDOH,NELAC-NY10854,NJDEP,PADEP	09/15/2016 17:13	KH
206-44-0	Fluoranthene	ND		mg/kg dry	0.0450	0.0897	2	EPA 8270D Certifications:	09/15/2016 08:12 CTDOH,NELAC-NY10854,NJDEP,PADEP	09/15/2016 17:13	KH
86-73-7	Fluorene	ND		mg/kg dry	0.0450	0.0897	2	EPA 8270D Certifications:	09/15/2016 08:12 NELAC-NY10854,NJDEP,PADEP	09/15/2016 17:13	KH
193-39-5	Indeno(1,2,3-cd)pyrene	ND		mg/kg dry	0.0450	0.0897	2	EPA 8270D Certifications:	09/15/2016 08:12 CTDOH,NELAC-NY10854,NJDEP,PADEP	09/15/2016 17:13	KH
91-20-3	Naphthalene	ND		mg/kg dry	0.0450	0.0897	2	EPA 8270D Certifications:	09/15/2016 08:12 CTDOH,NELAC-NY10854,NJDEP,PADEP	09/15/2016 17:13	KH
85-01-8	Phenanthrene	ND		mg/kg dry	0.0450	0.0897	2	EPA 8270D Certifications:	09/15/2016 08:12 CTDOH,NELAC-NY10854,NJDEP,PADEP	09/15/2016 17:13	KH
129-00-0	Pyrene	ND		mg/kg dry	0.0450	0.0897	2	EPA 8270D Certifications:	09/15/2016 08:12 CTDOH,NELAC-NY10854,NJDEP,PADEP	09/15/2016 17:13	KH

	Surrogate Recoveries	Result	Acceptance Range
4165-60-0	*Surrogate: Nitrobenzene-d5*	*69.6 %*	*22-108*
321-60-8	*Surrogate: 2-Fluorobiphenyl*	*58.8 %*	*21-113*
1718-51-0	*Surrogate: Terphenyl-d14*	*48.8 %*	*24-116*

Polychlorinated Biphenyls (PCB)

Log-in Notes: VOA-CONT **Sample Notes:**

Sample Prepared by Method: EPA 3550C

CAS No.	Parameter	Result	Flag	Units	LOD/MDL	Reported to LOQ	Dilution	Reference Method	Date/Time Prepared	Date/Time Analyzed	Analyst
12674-11-2	Aroclor 1016	ND		mg/kg dry	0.0179	0.0179	1	EPA 8082A Certifications:	09/13/2016 09:10 NELAC-NY10854,CTDOH,NJDEP,PADEP	09/14/2016 01:31	AMC
[illegible]104-28-2	Aroclor 1221	ND		mg/kg dry	0.0179	0.0179	1	EPA 8082A Certifications:	09/13/2016 09:10 NELAC-NY10854,CTDOH,NJDEP,PADEP	09/14/2016 01:31	AMC
[illegible]141-16-5	Aroclor 1232	ND		mg/kg dry	0.0179	0.0179	1	EPA 8082A Certifications:	09/13/2016 09:10 NELAC-NY10854,CTDOH,NJDEP,PADEP	09/14/2016 01:31	AMC

Sample Information

Client Sample ID: **SB-15-Comp** **York Sample ID:** **16I0323-16**

York Project (SDG) No.	Client Project ID	Matrix	Collection Date/Time	Date Received
16I0323	BEGS or OEGS (15-008-0265)	Soil	September 8, 2016 12:00 pm	09/09/2016

Polychlorinated Biphenyls (PCB)

Log-in Notes: VOA-CONT **Sample Notes:**

Sample Prepared by Method: EPA 3550C

CAS No.	Parameter	Result	Flag	Units	LOD/MDL	Reported to LOQ	Dilution	Reference Method	Date/Time Prepared	Date/Time Analyzed	Analyst
53469-21-9	Aroclor 1242	ND		mg/kg dry	0.0179	0.0179	1	EPA 8082A	09/13/2016 09:10	09/14/2016 01:31	AMC
								Certifications: NELAC-NY10854,CTDOH,NJDEP,PADEP			
12672-29-6	Aroclor 1248	ND		mg/kg dry	0.0179	0.0179	1	EPA 8082A	09/13/2016 09:10	09/14/2016 01:31	AMC
								Certifications: NELAC-NY10854,CTDOH,NJDEP,PADEP			
11097-69-1	Aroclor 1254	ND		mg/kg dry	0.0179	0.0179	1	EPA 8082A	09/13/2016 09:10	09/14/2016 01:31	AMC
								Certifications: NELAC-NY10854,CTDOH,NJDEP,PADEP			
11096-82-5	Aroclor 1260	ND		mg/kg dry	0.0179	0.0179	1	EPA 8082A	09/13/2016 09:10	09/14/2016 01:31	AMC
								Certifications: NELAC-NY10854,CTDOH,NJDEP,PADEP			
1336-36-3	* Total PCBs	ND		mg/kg dry	0.0179	0.0179	1	EPA 8082A	09/13/2016 09:10	09/14/2016 01:31	AMC
								Certifications:			

	Surrogate Recoveries	Result	Acceptance Range
877-09-8	*Surrogate: Tetrachloro-m-xylene*	*57.0 %*	*30-140*
2051-24-3	*Surrogate: Decachlorobiphenyl*	*47.5 %*	*30-140*

Total Petroleum Hydrocarbons-DRO (C10-C28)

Log-in Notes: VOA-CONT **Sample Notes:**

Sample Prepared by Method: EPA 3550C

CAS No.	Parameter	Result	Flag	Units	LOD/MDL	Reported to LOQ	Dilution	Reference Method	Date/Time Prepared	Date/Time Analyzed	Analyst
	Total Petroleum Hydrocarbons-DRO	ND		mg/kg dry	3.66	10.8	1	EPA 8015D	09/15/2016 07:34	09/15/2016 21:56	AMC
								Certifications: NELAC-NY10854,NJDEP,PADEP			

	Surrogate Recoveries	Result	Acceptance Range
638-68-6	*Surrogate: Triacontane*	*69.3 %*	*30-150*

Total Petroleum Hydrocarbons-GRO (C5-C10)

Log-in Notes: VOA-CONT **Sample Notes:**

Sample Prepared by Method: EPA 5035A

CAS No.	Parameter	Result	Flag	Units	LOD/MDL	Reported to LOQ	Dilution	Reference Method	Date/Time Prepared	Date/Time Analyzed	Analyst
	Total Petroleum Hydrocarbons-GRO	ND		mg/kg dry	43.0	86.1	100	EPA 8015D	09/14/2016 08:58	09/14/2016 21:57	OW
								Certifications: NELAC-NY10854,NJDEP,PADEP			

	Surrogate Recoveries	Result	Acceptance Range
460-00-4	*Surrogate: p-Bromofluorobenzene*	*90.6 %*	*70-130*

Metals, TCLP RCRA

Log-in Notes: VOA-CONT **Sample Notes:**

Sample Prepared by Method: EPA 3015A/1311

CAS No.	Parameter	Result	Flag	Units	LOD/MDL	Reported to LOQ	Dilution	Reference Method	Date/Time Prepared	Date/Time Analyzed	Analyst
7440-38-2	Arsenic	ND		mg/L	0.004	0.004	1	EPA 6010C/1311	09/13/2016 12:22	09/14/2016 06:32	KV
								Certifications: CTDOH,NELAC-NY10854,NJDEP,PADEP			
7440-39-3	**Barium**	**0.327**		mg/L	0.011	0.011	1	EPA 6010C/1311	09/13/2016 12:22	09/14/2016 06:32	KV
								Certifications: CTDOH,NELAC-NY10854,NJDEP,PADEP			
7440-43-9	Cadmium	ND		mg/L	0.003	0.003	1	EPA 6010C/1311	09/13/2016 12:22	09/14/2016 06:32	KV
								Certifications: CTDOH,NELAC-NY10854,NJDEP,PADEP			

Sample Information

Client Sample ID: SB-15-Comp

York Sample ID: 16I0323-16

York Project (SDG) No.	Client Project ID	Matrix	Collection Date/Time	Date Received
16I0323	BEGS or OEGS (15-008-0265)	Soil	September 8, 2016 12:00 pm	09/09/2016

Metals, TCLP RCRA

Log-in Notes: VOA-CONT **Sample Notes:**

Sample Prepared by Method: EPA 3015A/1311

CAS No.	Parameter	Result	Flag	Units	LOD/MDL	Reported to LOQ	Dilution	Reference Method	Date/Time Prepared	Date/Time Analyzed	Analyst
7440-47-3	Chromium	ND		mg/L	0.006	0.006	1	EPA 6010C/1311 Certifications: CTDOH,NELAC-NY10854,NJDEP,PADEP	09/13/2016 12:22	09/14/2016 06:32	KV
7439-92-1	**Lead**	**0.110**		mg/L	0.003	0.003	1	EPA 6010C/1311 Certifications: CTDOH,NELAC-NY10854,NJDEP,PADEP	09/13/2016 12:22	09/14/2016 06:32	KV
7782-49-2	**Selenium**	**0.020**	M-SeT C, B	mg/L	0.011	0.011	1	EPA 6010C/1311 Certifications: CTDOH,NELAC-NY10854,NJDEP,PADEP	09/13/2016 12:22	09/14/2016 06:32	KV
7440-22-4	Silver	ND		mg/L	0.006	0.006	1	EPA 6010C/1311 Certifications: CTDOH,NELAC-NY10854,NJDEP,PADEP	09/13/2016 12:22	09/14/2016 06:32	KV

Mercury TCLP by 7473

Log-in Notes: VOA-CONT **Sample Notes:**

Sample Prepared by Method: EPA 7473 water

CAS No.	Parameter	Result	Flag	Units	LOD/MDL	Reported to LOQ	Dilution	Reference Method	Date/Time Prepared	Date/Time Analyzed	Analyst
[illegible]9-97-6	Mercury	ND		mg/L	0.0000390	0.000200	1	EPA 7473/1311 Certifications: CTDOH,NJDEP,PADEP,NELAC-NY10854	09/13/2016 12:33	09/14/2016 06:59	ALD

Ignitability

Log-in Notes: VOA-CONT **Sample Notes:**

Sample Prepared by Method: Analysis Preparation

CAS No.	Parameter	Result	Flag	Units	LOD/MDL	Reported to LOQ	Dilution	Reference Method	Date/Time Prepared	Date/Time Analyzed	Analyst
	* Ignitability	Non-Ignit.		-	1	1	1	EPA 1030P Certifications: CTDOH,PADEP	09/13/2016 14:36	09/13/2016 14:58	AD

Total Solids

Log-in Notes: VOA-CONT **Sample Notes:**

Sample Prepared by Method: % Solids Prep

CAS No.	Parameter	Result	Flag	Units	LOD/MDL	Reported to LOQ	Dilution	Reference Method	Date/Time Prepared	Date/Time Analyzed	Analyst
solids	*** % Solids**	**93.0**		%	0.100	0.100	1	SM 2540G Certifications: CTDOH	09/15/2016 08:06	09/15/2016 15:16	LAB

Corrosivity

Log-in Notes: VOA-CONT **Sample Notes:**

Sample Prepared by Method: Analysis Preparation

CAS No.	Parameter	Result	Flag	Units	LOD/MDL	Reported to LOQ	Dilution	Reference Method	Date/Time Prepared	Date/Time Analyzed	Analyst
	pH	**6.47**	HT-pH	pH units		0.500	1	EPA 9045D Certifications: NELAC-NY10854,CTDOH,PADEP	09/13/2016 11:58	09/13/2016 14:32	LAB

Reactivity-Cyanide

Log-in Notes: VOA-CONT **Sample Notes:**

Sample Prepared by Method: Analysis Preparation

CAS No.	Parameter	Result	Flag	Units	LOD/MDL	Reported to LOQ	Dilution	Reference Method	Date/Time Prepared	Date/Time Analyzed	Analyst
	* Reactivity - Cyanide	ND		mg/kg	0.250	0.250	1	EPA SW-846 Ch.7.3.3 Certifications: CTDOH,PADEP	09/13/2016 08:17	09/13/2016 13:00	AD

Sample Information

Client Sample ID: SB-15-Comp

York Sample ID: 16I0323-16

York Project (SDG) No.	Client Project ID	Matrix	Collection Date/Time	Date Received
16I0323	BEGS or OEGS (15-008-0265)	Soil	September 8, 2016 12:00 pm	09/09/2016

Reactivity-Sulfide **Log-in Notes:** VOA-CONT **Sample Notes:**

Sample Prepared by Method: Analysis Preparation

CAS No.	Parameter	Result	Flag	Units	LOD/MDL	Reported to LOQ	Dilution	Reference Method	Date/Time Prepared	Date/Time Analyzed	Analyst
	* Reactivity - Sulfide	16.0		mg/kg	15.0	15.0	1	EPA SW-846 Ch.7.3.4	09/13/2016 08:28	09/13/2016 11:55	LAB
								Certifications: CTDOH,PADEP			

TCLP Extraction for METALS EPA 1311 **Log-in Notes:** VOA-CONT **Sample Notes:**

Sample Prepared by Method: EPA SW 846-1311 TCLP ext. for metals

CAS No.	Parameter	Result	Flag	Units	LOD/MDL	Reported to LOQ	Dilution	Reference Method	Date/Time Prepared	Date/Time Analyzed	Analyst
	TCLP Extraction	Completed		N/A	1.00	1.00	1	EPA 1311	09/12/2016 18:51	09/13/2016 14:06	TJM
								Certifications: NELAC-NY10854,CTDOH,NJDEP,PADEP			

Sample Information

Client Sample ID: SB-16-17.5-18.0'

York Sample ID: 16I0323-17

York Project (SDG) No.	Client Project ID	Matrix	Collection Date/Time	Date Received
16I0323	BEGS or OEGS (15-008-0265)	Soil	September 8, 2016 1:30 pm	09/09/20

Volatile Organics, 8260 - Comprehensive **Log-in Notes:** VOA-CONT **Sample Notes:** VOA-CONT

Sample Prepared by Method: EPA 5035A

CAS No.	Parameter	Result	Flag	Units	Reported to LOD/MDL	LOQ	Dilution	Reference Method	Date/Time Prepared	Date/Time Analyzed	Analyst
630-20-6	1,1,1,2-Tetrachloroethane	ND		mg/kg dry	0.0027	0.0054	1	EPA 8260C	09/14/2016 18:55	09/15/2016 06:17	SS
								Certifications: CTDOH,NELAC-NY10854,NJDEP			
71-55-6	1,1,1-Trichloroethane	ND		mg/kg dry	0.0027	0.0054	1	EPA 8260C	09/14/2016 18:55	09/15/2016 06:17	SS
								Certifications: CTDOH,NELAC-NY10854,NJDEP,PADEP			
79-34-5	1,1,2,2-Tetrachloroethane	ND		mg/kg dry	0.0027	0.0054	1	EPA 8260C	09/14/2016 18:55	09/15/2016 06:17	SS
								Certifications: CTDOH,NELAC-NY10854,NJDEP,PADEP			
76-13-1	1,1,2-Trichloro-1,2,2-trifluoroethane (Freon 113)	ND		mg/kg dry	0.0027	0.0054	1	EPA 8260C	09/14/2016 18:55	09/15/2016 06:17	SS
								Certifications: CTDOH,NELAC-NY10854,NJDEP			
79-00-5	1,1,2-Trichloroethane	ND		mg/kg dry	0.0027	0.0054	1	EPA 8260C	09/14/2016 18:55	09/15/2016 06:17	SS
								Certifications: CTDOH,NELAC-NY10854,NJDEP,PADEP			
75-34-3	1,1-Dichloroethane	ND		mg/kg dry	0.0027	0.0054	1	EPA 8260C	09/14/2016 18:55	09/15/2016 06:17	SS
								Certifications: CTDOH,NELAC-NY10854,NJDEP,PADEP			
75-35-4	1,1-Dichloroethylene	ND		mg/kg dry	0.0027	0.0054	1	EPA 8260C	09/14/2016 18:55	09/15/2016 06:17	SS
								Certifications: CTDOH,NELAC-NY10854,NJDEP,PADEP			
87-61-6	1,2,3-Trichlorobenzene	ND		mg/kg dry	0.0027	0.0054	1	EPA 8260C	09/14/2016 18:55	09/15/2016 06:17	SS
								Certifications: NELAC-NY10854,NJDEP			
96-18-4	1,2,3-Trichloropropane	ND		mg/kg dry	0.0027	0.0054	1	EPA 8260C	09/14/2016 18:55	09/15/2016 06:17	SS
								Certifications: NELAC-NY10854,NJDEP			
120-82-1	1,2,4-Trichlorobenzene	ND		mg/kg dry	0.0027	0.0054	1	EPA 8260C	09/14/2016 18:55	09/15/2016 06:17	SS
								Certifications: NELAC-NY10854,NJDEP			
95-63-6	1,2,4-Trimethylbenzene	ND		mg/kg dry	0.0027	0.0054	1	EPA 8260C	09/14/2016 18:55	09/15/2016 06:17	SS
								Certifications: CTDOH,NELAC-NY10854,NJDEP			

Sample Information

Client Sample ID: SB-16-17.5-18.0' **York Sample ID:** 16I0323-17

York Project (SDG) No.	Client Project ID	Matrix	Collection Date/Time	Date Received
16I0323	BEGS or OEGS (15-008-0265)	Soil	September 8, 2016 1:30 pm	09/09/2016

Volatile Organics, 8260 - Comprehensive

Log-in Notes: VOA-CONT **Sample Notes:** VOA-CONT

Sample Prepared by Method: EPA 5035A

CAS No.	Parameter	Result	Flag	Units	Reported to LOD/MDL	LOQ	Dilution	Reference Method	Date/Time Prepared	Date/Time Analyzed	Analyst
96-12-8	1,2-Dibromo-3-chloropropane	ND		mg/kg dry	0.0027	0.0054	1	EPA 8260C Certifications: CTDOH,NELAC-NY10854,NJDEP	09/14/2016 18:55	09/15/2016 06:17	SS
106-93-4	1,2-Dibromoethane	ND		mg/kg dry	0.0027	0.0054	1	EPA 8260C Certifications: CTDOH,NELAC-NY10854,NJDEP	09/14/2016 18:55	09/15/2016 06:17	SS
95-50-1	1,2-Dichlorobenzene	ND		mg/kg dry	0.0027	0.0054	1	EPA 8260C Certifications: CTDOH,NELAC-NY10854,NJDEP,PADEP	09/14/2016 18:55	09/15/2016 06:17	SS
107-06-2	1,2-Dichloroethane	ND		mg/kg dry	0.0027	0.0054	1	EPA 8260C Certifications: CTDOH,NELAC-NY10854,NJDEP,PADEP	09/14/2016 18:55	09/15/2016 06:17	SS
78-87-5	1,2-Dichloropropane	ND		mg/kg dry	0.0027	0.0054	1	EPA 8260C Certifications: CTDOH,NELAC-NY10854,NJDEP	09/14/2016 18:55	09/15/2016 06:17	SS
108-67-8	1,3,5-Trimethylbenzene	ND		mg/kg dry	0.0027	0.0054	1	EPA 8260C Certifications: CTDOH,NELAC-NY10854,NJDEP	09/14/2016 18:55	09/15/2016 06:17	SS
541-73-1	1,3-Dichlorobenzene	ND		mg/kg dry	0.0027	0.0054	1	EPA 8260C Certifications: CTDOH,NELAC-NY10854,NJDEP,PADEP	09/14/2016 18:55	09/15/2016 06:17	SS
[illegible]46-7	1,4-Dichlorobenzene	ND		mg/kg dry	0.0027	0.0054	1	EPA 8260C Certifications: CTDOH,NELAC-NY10854,NJDEP,PADEP	09/14/2016 18:55	09/15/2016 06:17	SS
123-91-1	1,4-Dioxane	ND		mg/kg dry	0.054	0.11	1	EPA 8260C Certifications: NELAC-NY10854,NJDEP	09/14/2016 18:55	09/15/2016 06:17	SS
78-93-3	2-Butanone	ND		mg/kg dry	0.0027	0.0054	1	EPA 8260C Certifications: CTDOH,NELAC-NY10854,NJDEP	09/14/2016 18:55	09/15/2016 06:17	SS
591-78-6	2-Hexanone	ND		mg/kg dry	0.0027	0.0054	1	EPA 8260C Certifications: CTDOH,NELAC-NY10854,NJDEP	09/14/2016 18:55	09/15/2016 06:17	SS
108-10-1	4-Methyl-2-pentanone	ND		mg/kg dry	0.0027	0.0054	1	EPA 8260C Certifications: CTDOH,NELAC-NY10854,NJDEP	09/14/2016 18:55	09/15/2016 06:17	SS
67-64-1	Acetone	ND		mg/kg dry	0.0054	0.011	1	EPA 8260C Certifications: CTDOH,NELAC-NY10854,NJDEP	09/14/2016 18:55	09/15/2016 06:17	SS
107-02-8	Acrolein	ND		mg/kg dry	0.0054	0.011	1	EPA 8260C Certifications: CTDOH,NELAC-NY10854,NJDEP	09/14/2016 18:55	09/15/2016 06:17	SS
107-13-1	Acrylonitrile	ND		mg/kg dry	0.0027	0.0054	1	EPA 8260C Certifications: CTDOH,NELAC-NY10854,NJDEP	09/14/2016 18:55	09/15/2016 06:17	SS
71-43-2	Benzene	ND		mg/kg dry	0.0027	0.0054	1	EPA 8260C Certifications: CTDOH,NELAC-NY10854,NJDEP,PADEP	09/14/2016 18:55	09/15/2016 06:17	SS
74-97-5	Bromochloromethane	ND		mg/kg dry	0.0027	0.0054	1	EPA 8260C Certifications: NELAC-NY10854,NJDEP	09/14/2016 18:55	09/15/2016 06:17	SS
75-27-4	Bromodichloromethane	ND		mg/kg dry	0.0027	0.0054	1	EPA 8260C Certifications: CTDOH,NELAC-NY10854,NJDEP,PADEP	09/14/2016 18:55	09/15/2016 06:17	SS
75-25-2	Bromoform	ND		mg/kg dry	0.0027	0.0054	1	EPA 8260C Certifications: CTDOH,NELAC-NY10854,NJDEP,PADEP	09/14/2016 18:55	09/15/2016 06:17	SS
74-83-9	Bromomethane	ND		mg/kg dry	0.0027	0.0054	1	EPA 8260C Certifications: CTDOH,NELAC-NY10854,NJDEP,PADEP	09/14/2016 18:55	09/15/2016 06:17	SS
75-15-0	Carbon disulfide	ND		mg/kg dry	0.0027	0.0054	1	EPA 8260C Certifications: CTDOH,NELAC-NY10854,NJDEP	09/14/2016 18:55	09/15/2016 06:17	SS
[illegible]-5	Carbon tetrachloride	ND		mg/kg dry	0.0027	0.0054	1	EPA 8260C Certifications: CTDOH,NELAC-NY10854,NJDEP,PADEP	09/14/2016 18:55	09/15/2016 06:17	SS

Sample Information

Client Sample ID: SB-16-17.5-18.0'

York Sample ID: 16I0323-17

York Project (SDG) No.	Client Project ID	Matrix	Collection Date/Time	Date Received
16I0323	BEGS or OEGS (15-008-0265)	Soil	September 8, 2016 1:30 pm	09/09/2016

Volatile Organics, 8260 - Comprehensive

Log-in Notes: VOA-CONT **Sample Notes:** VOA-CONT

Sample Prepared by Method: EPA 5035A

CAS No.	Parameter	Result	Flag	Units	Reported to LOD/MDL	LOQ	Dilution	Reference Method	Date/Time Prepared	Date/Time Analyzed	Analyst
108-90-7	Chlorobenzene	ND		mg/kg dry	0.0027	0.0054	1	EPA 8260C Certifications: CTDOH,NELAC-NY10854,NJDEP,PADEP	09/14/2016 18:55	09/15/2016 06:17	SS
75-00-3	Chloroethane	ND		mg/kg dry	0.0027	0.0054	1	EPA 8260C Certifications: CTDOH,NELAC-NY10854,NJDEP,PADEP	09/14/2016 18:55	09/15/2016 06:17	SS
67-66-3	Chloroform	ND		mg/kg dry	0.0027	0.0054	1	EPA 8260C Certifications: CTDOH,NELAC-NY10854,NJDEP,PADEP	09/14/2016 18:55	09/15/2016 06:17	SS
74-87-3	Chloromethane	ND		mg/kg dry	0.0027	0.0054	1	EPA 8260C Certifications: CTDOH,NELAC-NY10854,NJDEP,PADEP	09/14/2016 18:55	09/15/2016 06:17	SS
156-59-2	cis-1,2-Dichloroethylene	ND		mg/kg dry	0.0027	0.0054	1	EPA 8260C Certifications: CTDOH,NELAC-NY10854,NJDEP	09/14/2016 18:55	09/15/2016 06:17	SS
10061-01-5	cis-1,3-Dichloropropylene	ND		mg/kg dry	0.0027	0.0054	1	EPA 8260C Certifications: CTDOH,NELAC-NY10854,NJDEP,PADEP	09/14/2016 18:55	09/15/2016 06:17	SS
110-82-7	Cyclohexane	ND		mg/kg dry	0.0027	0.0054	1	EPA 8260C Certifications: NELAC-NY10854,NJDEP	09/14/2016 18:55	09/15/2016 06:17	SS
124-48-1	Dibromochloromethane	ND		mg/kg dry	0.0027	0.0054	1	EPA 8260C Certifications: NELAC-NY10854,NJDEP,PADEP	09/14/2016 18:55	09/15/2016 06:17	SS
74-95-3	Dibromomethane	ND		mg/kg dry	0.0027	0.0054	1	EPA 8260C Certifications: NELAC-NY10854,NJDEP	09/14/2016 18:55	09/15/2016 06:17	SS
75-71-8	Dichlorodifluoromethane	ND		mg/kg dry	0.0027	0.0054	1	EPA 8260C Certifications: NELAC-NY10854,NJDEP	09/14/2016 18:55	09/15/2016 06:17	SS
100-41-4	Ethyl Benzene	ND		mg/kg dry	0.0027	0.0054	1	EPA 8260C Certifications: CTDOH,NELAC-NY10854,NJDEP,PADEP	09/14/2016 18:55	09/15/2016 06:17	SS
87-68-3	Hexachlorobutadiene	ND		mg/kg dry	0.0027	0.0054	1	EPA 8260C Certifications: NELAC-NY10854,NJDEP	09/14/2016 18:55	09/15/2016 06:17	SS
98-82-8	Isopropylbenzene	ND		mg/kg dry	0.0027	0.0054	1	EPA 8260C Certifications: CTDOH,NELAC-NY10854,NJDEP	09/14/2016 18:55	09/15/2016 06:17	SS
79-20-9	Methyl acetate	ND		mg/kg dry	0.0027	0.0054	1	EPA 8260C Certifications: NELAC-NY10854,NJDEP	09/14/2016 18:55	09/15/2016 06:17	SS
1634-04-4	Methyl tert-butyl ether (MTBE)	ND		mg/kg dry	0.0027	0.0054	1	EPA 8260C Certifications: CTDOH,NELAC-NY10854,NJDEP	09/14/2016 18:55	09/15/2016 06:17	SS
108-87-2	Methylcyclohexane	ND		mg/kg dry	0.0027	0.0054	1	EPA 8260C Certifications: NELAC-NY10854,NJDEP	09/14/2016 18:55	09/15/2016 06:17	SS
75-09-2	Methylene chloride	ND		mg/kg dry	0.0054	0.011	1	EPA 8260C Certifications: CTDOH,NELAC-NY10854,NJDEP,PADEP	09/14/2016 18:55	09/15/2016 06:17	SS
104-51-8	n-Butylbenzene	ND		mg/kg dry	0.0027	0.0054	1	EPA 8260C Certifications: CTDOH,NELAC-NY10854,NJDEP	09/14/2016 18:55	09/15/2016 06:17	SS
103-65-1	n-Propylbenzene	ND		mg/kg dry	0.0027	0.0054	1	EPA 8260C Certifications: CTDOH,NELAC-NY10854,NJDEP	09/14/2016 18:55	09/15/2016 06:17	SS
95-47-6	o-Xylene	ND		mg/kg dry	0.0027	0.0054	1	EPA 8260C Certifications: CTDOH,NELAC-NY10854	09/14/2016 18:55	09/15/2016 06:17	SS
179601-23-1	p- & m- Xylenes	ND		mg/kg dry	0.0054	0.011	1	EPA 8260C Certifications: CTDOH,NELAC-NY10854	09/14/2016 18:55	09/15/2016 06:17	SS
99-87-6	p-Isopropyltoluene	ND		mg/kg dry	0.0027	0.0054	1	EPA 8260C Certifications: CTDOH,NELAC-NY10854,NJDEP	09/14/2016 18:55	09/15/2016 06:17	SS

Sample Information

Client Sample ID: SB-16-17.5-18.0' **York Sample ID:** 16I0323-17

York Project (SDG) No.	Client Project ID	Matrix	Collection Date/Time	Date Received
16I0323	BEGS or OEGS (15-008-0265)	Soil	September 8, 2016 1:30 pm	09/09/2016

Volatile Organics, 8260 - Comprehensive

Log-in Notes: VOA-CONT **Sample Notes:** VOA-CONT

Sample Prepared by Method: EPA 5035A

CAS No.	Parameter	Result	Flag	Units	Reported to LOD/MDL	LOQ	Dilution	Reference Method	Date/Time Prepared	Date/Time Analyzed	Analyst
135-98-8	sec-Butylbenzene	ND		mg/kg dry	0.0027	0.0054	1	EPA 8260C Certifications: CTDOH,NELAC-NY10854,NJDEP	09/14/2016 18:55	09/15/2016 06:17	SS
100-42-5	Styrene	ND		mg/kg dry	0.0027	0.0054	1	EPA 8260C Certifications: CTDOH,NELAC-NY10854,NJDEP	09/14/2016 18:55	09/15/2016 06:17	SS
75-65-0	tert-Butyl alcohol (TBA)	ND		mg/kg dry	0.0027	0.0054	1	EPA 8260C Certifications: NELAC-NY10854,NJDEP	09/14/2016 18:55	09/15/2016 06:17	SS
98-06-6	tert-Butylbenzene	ND		mg/kg dry	0.0027	0.0054	1	EPA 8260C Certifications: CTDOH,NELAC-NY10854,NJDEP	09/14/2016 18:55	09/15/2016 06:17	SS
127-18-4	Tetrachloroethylene	ND		mg/kg dry	0.0027	0.0054	1	EPA 8260C Certifications: CTDOH,NELAC-NY10854,NJDEP,PADEP	09/14/2016 18:55	09/15/2016 06:17	SS
108-88-3	Toluene	ND		mg/kg dry	0.0027	0.0054	1	EPA 8260C Certifications: CTDOH,NELAC-NY10854,NJDEP,PADEP	09/14/2016 18:55	09/15/2016 06:17	SS
156-60-5	trans-1,2-Dichloroethylene	ND		mg/kg dry	0.0027	0.0054	1	EPA 8260C Certifications: CTDOH,NELAC-NY10854,NJDEP	09/14/2016 18:55	09/15/2016 06:17	SS
1-02-6	trans-1,3-Dichloropropylene	ND		mg/kg dry	0.0027	0.0054	1	EPA 8260C Certifications: CTDOH,NELAC-NY10854,NJDEP,PADEP	09/14/2016 18:55	09/15/2016 06:17	SS
79-01-6	Trichloroethylene	ND		mg/kg dry	0.0027	0.0054	1	EPA 8260C Certifications: CTDOH,NELAC-NY10854,NJDEP,PADEP	09/14/2016 18:55	09/15/2016 06:17	SS
75-69-4	Trichlorofluoromethane	ND		mg/kg dry	0.0027	0.0054	1	EPA 8260C Certifications: CTDOH,NELAC-NY10854,NJDEP,PADEP	09/14/2016 18:55	09/15/2016 06:17	SS
75-01-4	Vinyl Chloride	ND		mg/kg dry	0.0027	0.0054	1	EPA 8260C Certifications: CTDOH,NELAC-NY10854,NJDEP,PADEP	09/14/2016 18:55	09/15/2016 06:17	SS
1330-20-7	Xylenes, Total	ND		mg/kg dry	0.0081	0.016	1	EPA 8260C Certifications: CTDOH,NELAC-NY10854,NJDEP,PADEP	09/14/2016 18:55	09/15/2016 06:17	SS

	Surrogate Recoveries	Result	Acceptance Range
17060-07-0	*Surrogate: 1,2-Dichloroethane-d4*	*88.1 %*	*77-125*
2037-26-5	*Surrogate: Toluene-d8*	*103 %*	*85-120*
460-00-4	*Surrogate: p-Bromofluorobenzene*	*96.3 %*	*76-130*

Total Solids

Log-in Notes: VOA-CONT **Sample Notes:**

Sample Prepared by Method: % Solids Prep

CAS No.	Parameter	Result	Flag	Units	LOD/MDL	Reported to LOQ	Dilution	Reference Method	Date/Time Prepared	Date/Time Analyzed	Analyst
solids	*** % Solids**	**92.7**		%	0.100	0.100	1	SM 2540G Certifications: CTDOH	09/15/2016 08:06	09/15/2016 15:16	LAB

Sample Information

Client Sample ID: SB-16-Comp **York Sample ID:** 16I0323-18

rk Project (SDG) No.	Client Project ID	Matrix	Collection Date/Time	Date Received
16I0323	BEGS or OEGS (15-008-0265)	Soil	September 8, 2016 1:40 pm	09/09/2016

Sample Information

Client Sample ID: SB-16-Comp

York Sample ID: 16I0323-18

York Project (SDG) No.	Client Project ID	Matrix	Collection Date/Time	Date Received
16I0323	BEGS or OEGS (15-008-0265)	Soil	September 8, 2016 1:40 pm	09/09/2016

Semi-Volatiles, PAH Target List

Log-in Notes: VOA-CONT **Sample Notes:**

Sample Prepared by Method: EPA 3550C

CAS No.	Parameter	Result	Flag	Units	Reported to LOD/MDL	LOQ	Dilution	Reference Method	Date/Time Prepared	Date/Time Analyzed	Analyst
91-57-6	2-Methylnaphthalene	ND		mg/kg dry	0.0471	0.0939	2	EPA 8270D	09/15/2016 08:12	09/15/2016 17:45	KH
								Certifications:	CTDOH,NELAC-NY10854,NJDEP,PADEP		
83-32-9	Acenaphthene	ND		mg/kg dry	0.0471	0.0939	2	EPA 8270D	09/15/2016 08:12	09/15/2016 17:45	KH
								Certifications:	CTDOH,NELAC-NY10854,NJDEP,PADEP		
208-96-8	Acenaphthylene	ND		mg/kg dry	0.0471	0.0939	2	EPA 8270D	09/15/2016 08:12	09/15/2016 17:45	KH
								Certifications:	CTDOH,NELAC-NY10854,NJDEP,PADEP		
120-12-7	Anthracene	ND		mg/kg dry	0.0471	0.0939	2	EPA 8270D	09/15/2016 08:12	09/15/2016 17:45	KH
								Certifications:	CTDOH,NELAC-NY10854,NJDEP,PADEP		
56-55-3	Benzo(a)anthracene	ND		mg/kg dry	0.0471	0.0939	2	EPA 8270D	09/15/2016 08:12	09/15/2016 17:45	KH
								Certifications:	CTDOH,NELAC-NY10854,NJDEP,PADEP		
50-32-8	Benzo(a)pyrene	ND		mg/kg dry	0.0471	0.0939	2	EPA 8270D	09/15/2016 08:12	09/15/2016 17:45	KH
								Certifications:	CTDOH,NELAC-NY10854,NJDEP,PADEP		
205-99-2	Benzo(b)fluoranthene	ND		mg/kg dry	0.0471	0.0939	2	EPA 8270D	09/15/2016 08:12	09/15/2016 17:45	KH
								Certifications:	CTDOH,NELAC-NY10854,NJDEP,PADEP		
191-24-2	Benzo(g,h,i)perylene	ND		mg/kg dry	0.0471	0.0939	2	EPA 8270D	09/15/2016 08:12	09/15/2016 17:45	KH
								Certifications:	CTDOH,NELAC-NY10854,NJDEP,PADEP		
207-08-9	Benzo(k)fluoranthene	ND		mg/kg dry	0.0471	0.0939	2	EPA 8270D	09/15/2016 08:12	09/15/2016 17:45	KH
								Certifications:	CTDOH,NELAC-NY10854,NJDEP,PADEP		
218-01-9	Chrysene	ND		mg/kg dry	0.0471	0.0939	2	EPA 8270D	09/15/2016 08:12	09/15/2016 17:45	KH
								Certifications:	CTDOH,NELAC-NY10854,NJDEP,PADEP		
53-70-3	Dibenzo(a,h)anthracene	ND		mg/kg dry	0.0471	0.0939	2	EPA 8270D	09/15/2016 08:12	09/15/2016 17:45	KH
								Certifications:	CTDOH,NELAC-NY10854,NJDEP,PADEP		
206-44-0	Fluoranthene	ND		mg/kg dry	0.0471	0.0939	2	EPA 8270D	09/15/2016 08:12	09/15/2016 17:45	KH
								Certifications:	CTDOH,NELAC-NY10854,NJDEP,PADEP		
86-73-7	Fluorene	ND		mg/kg dry	0.0471	0.0939	2	EPA 8270D	09/15/2016 08:12	09/15/2016 17:45	KH
								Certifications:	NELAC-NY10854,NJDEP,PADEP		
193-39-5	Indeno(1,2,3-cd)pyrene	ND		mg/kg dry	0.0471	0.0939	2	EPA 8270D	09/15/2016 08:12	09/15/2016 17:45	KH
								Certifications:	CTDOH,NELAC-NY10854,NJDEP,PADEP		
91-20-3	Naphthalene	ND		mg/kg dry	0.0471	0.0939	2	EPA 8270D	09/15/2016 08:12	09/15/2016 17:45	KH
								Certifications:	CTDOH,NELAC-NY10854,NJDEP,PADEP		
85-01-8	Phenanthrene	ND		mg/kg dry	0.0471	0.0939	2	EPA 8270D	09/15/2016 08:12	09/15/2016 17:45	KH
								Certifications:	CTDOH,NELAC-NY10854,NJDEP,PADEP		
129-00-0	Pyrene	ND		mg/kg dry	0.0471	0.0939	2	EPA 8270D	09/15/2016 08:12	09/15/2016 17:45	KH
								Certifications:	CTDOH,NELAC-NY10854,NJDEP,PADEP		

	Surrogate Recoveries	Result	Acceptance Range
4165-60-0	*Surrogate: Nitrobenzene-d5*	*58.8 %*	*22-108*
321-60-8	*Surrogate: 2-Fluorobiphenyl*	*49.9 %*	*21-113*
1718-51-0	*Surrogate: Terphenyl-d14*	*40.4 %*	*24-116*

Polychlorinated Biphenyls (PCB)

Log-in Notes: VOA-CONT **Sample Notes:**

Sample Information

Client Sample ID: SB-16-Comp

York Sample ID: 16I0323-18

York Project (SDG) No.	Client Project ID	Matrix	Collection Date/Time	Date Received
16I0323	BEGS or OEGS (15-008-0265)	Soil	September 8, 2016 1:40 pm	09/09/2016

Sample Prepared by Method: EPA 3550C

CAS No.	Parameter	Result	Flag	Units	LOD/MDL	Reported to LOQ	Dilution	Reference Method	Date/Time Prepared	Date/Time Analyzed	Analyst
12674-11-2	Aroclor 1016	ND		mg/kg dry	0.0188	0.0188	1	EPA 8082A	09/13/2016 09:10	09/14/2016 02:00	AMC
								Certifications: NELAC-NY10854,CTDOH,NJDEP,PADEP			
11104-28-2	Aroclor 1221	ND		mg/kg dry	0.0188	0.0188	1	EPA 8082A	09/13/2016 09:10	09/14/2016 02:00	AMC
								Certifications: NELAC-NY10854,CTDOH,NJDEP,PADEP			
11141-16-5	Aroclor 1232	ND		mg/kg dry	0.0188	0.0188	1	EPA 8082A	09/13/2016 09:10	09/14/2016 02:00	AMC
								Certifications: NELAC-NY10854,CTDOH,NJDEP,PADEP			
53469-21-9	Aroclor 1242	ND		mg/kg dry	0.0188	0.0188	1	EPA 8082A	09/13/2016 09:10	09/14/2016 02:00	AMC
								Certifications: NELAC-NY10854,CTDOH,NJDEP,PADEP			
12672-29-6	Aroclor 1248	ND		mg/kg dry	0.0188	0.0188	1	EPA 8082A	09/13/2016 09:10	09/14/2016 02:00	AMC
								Certifications: NELAC-NY10854,CTDOH,NJDEP,PADEP			
11097-69-1	Aroclor 1254	ND		mg/kg dry	0.0188	0.0188	1	EPA 8082A	09/13/2016 09:10	09/14/2016 02:00	AMC
								Certifications: NELAC-NY10854,CTDOH,NJDEP,PADEP			
11096-82-5	Aroclor 1260	ND		mg/kg dry	0.0188	0.0188	1	EPA 8082A	09/13/2016 09:10	09/14/2016 02:00	AMC
								Certifications: NELAC-NY10854,CTDOH,NJDEP,PADEP			
[illegible]6-36-3	* Total PCBs	ND		mg/kg dry	0.0188	0.0188	1	EPA 8082A	09/13/2016 09:10	09/14/2016 02:00	AMC
								Certifications:			

	Surrogate Recoveries	Result	Acceptance Range
877-09-8	*Surrogate: Tetrachloro-m-xylene*	*61.5 %*	*30-140*
2051-24-3	*Surrogate: Decachlorobiphenyl*	*52.0 %*	*30-140*

Total Petroleum Hydrocarbons-DRO (C10-C28)

Log-in Notes: VOA-CONT **Sample Notes:**

Sample Prepared by Method: EPA 3550C

CAS No.	Parameter	Result	Flag	Units	LOD/MDL	Reported to LOQ	Dilution	Reference Method	Date/Time Prepared	Date/Time Analyzed	Analyst
	Total Petroleum Hydrocarbons-DRO	ND		mg/kg dry	3.83	11.3	1	EPA 8015D	09/15/2016 07:34	09/15/2016 22:27	AMC
								Certifications: NELAC-NY10854,NJDEP,PADEP			

	Surrogate Recoveries	Result	Acceptance Range
638-68-6	*Surrogate: Triacontane*	*77.3 %*	*30-150*

Total Petroleum Hydrocarbons-GRO (C5-C10)

Log-in Notes: VOA-CONT **Sample Notes:**

Sample Prepared by Method: EPA 5035A

CAS No.	Parameter	Result	Flag	Units	LOD/MDL	Reported to LOQ	Dilution	Reference Method	Date/Time Prepared	Date/Time Analyzed	Analyst
	Total Petroleum Hydrocarbons-GRO	ND		mg/kg dry	45.0	90.1	100	EPA 8015D	09/14/2016 08:58	09/14/2016 22:35	OW
								Certifications: NELAC-NY10854,NJDEP,PADEP			

	Surrogate Recoveries	Result	Acceptance Range
460-00-4	*Surrogate: p-Bromofluorobenzene*	*90.5 %*	*70-130*

Metals, TCLP RCRA

Log-in Notes: VOA-CONT **Sample Notes:**

Sample Prepared by Method: EPA 3015A/1311

CAS No.	Parameter	Result	Flag	Units	LOD/MDL	Reported to LOQ	Dilution	Reference Method	Date/Time Prepared	Date/Time Analyzed	Analyst

Sample Information

Client Sample ID: SB-16-Comp

York Sample ID: 16I0323-18

York Project (SDG) No.	Client Project ID	Matrix	Collection Date/Time	Date Received
16I0323	BEGS or OEGS (15-008-0265)	Soil	September 8, 2016 1:40 pm	09/09/2016

Metals, TCLP RCRA

Log-in Notes: VOA-CONT **Sample Notes:**

Sample Prepared by Method: EPA 3015A/1311

CAS No.	Parameter	Result	Flag	Units	LOD/MDL	Reported to LOQ	Dilution	Reference Method	Date/Time Prepared	Date/Time Analyzed	Analyst
7440-38-2	Arsenic	ND		mg/L	0.004	0.004	1	EPA 6010C/1311	09/13/2016 12:22	09/14/2016 06:37	KV
								Certifications: CTDOH,NELAC-NY10854,NJDEP,PADEP			
7440-39-3	**Barium**	**0.302**		mg/L	0.011	0.011	1	EPA 6010C/1311	09/13/2016 12:22	09/14/2016 06:37	KV
								Certifications: CTDOH,NELAC-NY10854,NJDEP,PADEP			
7440-43-9	Cadmium	ND		mg/L	0.003	0.003	1	EPA 6010C/1311	09/13/2016 12:22	09/14/2016 06:37	KV
								Certifications: CTDOH,NELAC-NY10854,NJDEP,PADEP			
7440-47-3	Chromium	ND		mg/L	0.006	0.006	1	EPA 6010C/1311	09/13/2016 12:22	09/14/2016 06:37	KV
								Certifications: CTDOH,NELAC-NY10854,NJDEP,PADEP			
7439-92-1	**Lead**	**0.045**		mg/L	0.003	0.003	1	EPA 6010C/1311	09/13/2016 12:22	09/14/2016 06:37	KV
								Certifications: CTDOH,NELAC-NY10854,NJDEP,PADEP			
7782-49-2	**Selenium**	**0.023**	M-SeT C, B	mg/L	0.011	0.011	1	EPA 6010C/1311	09/13/2016 12:22	09/14/2016 06:37	KV
								Certifications: CTDOH,NELAC-NY10854,NJDEP,PADEP			
7440-22-4	Silver	ND		mg/L	0.006	0.006	1	EPA 6010C/1311	09/13/2016 12:22	09/14/2016 06:37	KV
								Certifications: CTDOH,NELAC-NY10854,NJDEP,PADEP			

Mercury TCLP by 7473

Log-in Notes: VOA-CONT **Sample Notes:**

Sample Prepared by Method: EPA 7473 water

CAS No.	Parameter	Result	Flag	Units	LOD/MDL	Reported to LOQ	Dilution	Reference Method	Date/Time Prepared	Date/Time Analyzed	Analyst
7439-97-6	Mercury	ND		mg/L	0.0000390	0.000200	1	EPA 7473/1311	09/13/2016 12:33	09/14/2016 06:59	ALD
								Certifications: CTDOH,NJDEP,PADEP,NELAC-NY10854			

Ignitability

Log-in Notes: VOA-CONT **Sample Notes:**

Sample Prepared by Method: Analysis Preparation

CAS No.	Parameter	Result	Flag	Units	LOD/MDL	Reported to LOQ	Dilution	Reference Method	Date/Time Prepared	Date/Time Analyzed	Analyst
	* Ignitability	Non-Ignit.		-	1	1	1	EPA 1030P	09/13/2016 14:36	09/13/2016 14:58	AD
								Certifications: CTDOH,PADEP			

Total Solids

Log-in Notes: VOA-CONT **Sample Notes:**

Sample Prepared by Method: % Solids Prep

CAS No.	Parameter	Result	Flag	Units	LOD/MDL	Reported to LOQ	Dilution	Reference Method	Date/Time Prepared	Date/Time Analyzed	Analyst
solids	*** % Solids**	**88.8**		%	0.100	0.100	1	SM 2540G	09/15/2016 08:06	09/15/2016 15:16	LAB
								Certifications: CTDOH			

Corrosivity

Log-in Notes: VOA-CONT **Sample Notes:**

Sample Prepared by Method: Analysis Preparation

CAS No.	Parameter	Result	Flag	Units	LOD/MDL	Reported to LOQ	Dilution	Reference Method	Date/Time Prepared	Date/Time Analyzed	Analyst
	pH	**7.15**	HT-pH	pH units		0.500	1	EPA 9045D	09/13/2016 11:58	09/13/2016 14:32	LAB
								Certifications: NELAC-NY10854,CTDOH,PADEP			

Sample Information

Client Sample ID: SB-16-Comp | **York Sample ID:** 16I0323-18

York Project (SDG) No.	Client Project ID	Matrix	Collection Date/Time	Date Received
16I0323	BEGS or OEGS (15-008-0265)	Soil	September 8, 2016 1:40 pm	09/09/2016

Reactivity-Cyanide

Log-in Notes: VOA-CONT **Sample Notes:**

Sample Prepared by Method: Analysis Preparation

CAS No.	Parameter	Result	Flag	Units	LOD/MDL	Reported to LOQ	Dilution	Reference Method	Date/Time Prepared	Date/Time Analyzed	Analyst
	* Reactivity - Cyanide	ND		mg/kg	0.250	0.250	1	EPA SW-846 Ch.7.3.3	09/13/2016 08:17	09/13/2016 13:00	AD
								Certifications: CTDOH,PADEP			

Reactivity-Sulfide

Log-in Notes: VOA-CONT **Sample Notes:**

Sample Prepared by Method: Analysis Preparation

CAS No.	Parameter	Result	Flag	Units	LOD/MDL	Reported to LOQ	Dilution	Reference Method	Date/Time Prepared	Date/Time Analyzed	Analyst
	*** Reactivity - Sulfide**	**32.0**		mg/kg	15.0	15.0	1	EPA SW-846 Ch.7.3.4	09/13/2016 08:28	09/13/2016 11:55	LAB
								Certifications: CTDOH,PADEP			

TCLP Extraction for METALS EPA 1311

Log-in Notes: VOA-CONT **Sample Notes:**

Sample Prepared by Method: EPA SW 846-1311 TCLP ext. for metals

CAS No.	Parameter	Result	Flag	Units	LOD/MDL	Reported to LOQ	Dilution	Reference Method	Date/Time Prepared	Date/Time Analyzed	Analyst
	TCLP Extraction	Completed		N/A	1.00	1.00	1	EPA 1311	09/12/2016 18:51	09/13/2016 14:06	TJM
								Certifications: NELAC-NY10854,CTDOH,NJDEP,PADEP			

Sample Information

Client Sample ID: SB-10-14.5-15.0' | **York Sample ID:** 16I0323-19

York Project (SDG) No.	Client Project ID	Matrix	Collection Date/Time	Date Received
16I0323	BEGS or OEGS (15-008-0265)	Soil	September 8, 2016 2:30 pm	09/09/2016

Volatile Organics, 8260 - Comprehensive

Log-in Notes: VOA-CONT **Sample Notes:** VOA-CONT

Sample Prepared by Method: EPA 5035A

CAS No.	Parameter	Result	Flag	Units	Reported to LOD/MDL	LOQ	Dilution	Reference Method	Date/Time Prepared	Date/Time Analyzed	Analyst
630-20-6	1,1,1,2-Tetrachloroethane	ND		mg/kg dry	0.0030	0.0060	1	EPA 8260C	09/14/2016 18:55	09/15/2016 06:51	SS
								Certifications: CTDOH,NELAC-NY10854,NJDEP			
71-55-6	1,1,1-Trichloroethane	ND		mg/kg dry	0.0030	0.0060	1	EPA 8260C	09/14/2016 18:55	09/15/2016 06:51	SS
								Certifications: CTDOH,NELAC-NY10854,NJDEP,PADEP			
79-34-5	1,1,2,2-Tetrachloroethane	ND		mg/kg dry	0.0030	0.0060	1	EPA 8260C	09/14/2016 18:55	09/15/2016 06:51	SS
								Certifications: CTDOH,NELAC-NY10854,NJDEP,PADEP			
76-13-1	1,1,2-Trichloro-1,2,2-trifluoroethane (Freon 113)	ND		mg/kg dry	0.0030	0.0060	1	EPA 8260C	09/14/2016 18:55	09/15/2016 06:51	SS
								Certifications: CTDOH,NELAC-NY10854,NJDEP			
79-00-5	1,1,2-Trichloroethane	ND		mg/kg dry	0.0030	0.0060	1	EPA 8260C	09/14/2016 18:55	09/15/2016 06:51	SS
								Certifications: CTDOH,NELAC-NY10854,NJDEP,PADEP			
75-34-3	1,1-Dichloroethane	ND		mg/kg dry	0.0030	0.0060	1	EPA 8260C	09/14/2016 18:55	09/15/2016 06:51	SS
								Certifications: CTDOH,NELAC-NY10854,NJDEP,PADEP			
[illegible]35-4	1,1-Dichloroethylene	ND		mg/kg dry	0.0030	0.0060	1	EPA 8260C	09/14/2016 18:55	09/15/2016 06:51	SS
								Certifications: CTDOH,NELAC-NY10854,NJDEP,PADEP			
[illegible]7-61-6	1,2,3-Trichlorobenzene	ND		mg/kg dry	0.0030	0.0060	1	EPA 8260C	09/14/2016 18:55	09/15/2016 06:51	SS
								Certifications: NELAC-NY10854,NJDEP			

Sample Information

Client Sample ID: **SB-10-14.5-15.0'** **York Sample ID:** **16I0323-19**

York Project (SDG) No.	Client Project ID	Matrix	Collection Date/Time	Date Received
16I0323	BEGS or OEGS (15-008-0265)	Soil	September 8, 2016 2:30 pm	09/09/2016

Volatile Organics, 8260 - Comprehensive

Log-in Notes: VOA-CONT **Sample Notes:** **VOA-CONT**

Sample Prepared by Method: EPA 5035A

CAS No.	Parameter	Result	Flag	Units	Reported to LOD/MDL	LOQ	Dilution	Reference Method	Date/Time Prepared	Date/Time Analyzed	Analyst
96-18-4	1,2,3-Trichloropropane	ND		mg/kg dry	0.0030	0.0060	1	EPA 8260C Certifications: NELAC-NY10854,NJDEP	09/14/2016 18:55	09/15/2016 06:51	SS
120-82-1	1,2,4-Trichlorobenzene	ND		mg/kg dry	0.0030	0.0060	1	EPA 8260C Certifications: NELAC-NY10854,NJDEP	09/14/2016 18:55	09/15/2016 06:51	SS
95-63-6	1,2,4-Trimethylbenzene	ND		mg/kg dry	0.0030	0.0060	1	EPA 8260C Certifications: CTDOH,NELAC-NY10854,NJDEP	09/14/2016 18:55	09/15/2016 06:51	SS
96-12-8	1,2-Dibromo-3-chloropropane	ND		mg/kg dry	0.0030	0.0060	1	EPA 8260C Certifications: CTDOH,NELAC-NY10854,NJDEP	09/14/2016 18:55	09/15/2016 06:51	SS
106-93-4	1,2-Dibromoethane	ND		mg/kg dry	0.0030	0.0060	1	EPA 8260C Certifications: CTDOH,NELAC-NY10854,NJDEP	09/14/2016 18:55	09/15/2016 06:51	SS
95-50-1	1,2-Dichlorobenzene	ND		mg/kg dry	0.0030	0.0060	1	EPA 8260C Certifications: CTDOH,NELAC-NY10854,NJDEP,PADEP	09/14/2016 18:55	09/15/2016 06:51	SS
107-06-2	1,2-Dichloroethane	ND		mg/kg dry	0.0030	0.0060	1	EPA 8260C Certifications: CTDOH,NELAC-NY10854,NJDEP,PADEP	09/14/2016 18:55	09/15/2016 06:51	SS
78-87-5	1,2-Dichloropropane	ND		mg/kg dry	0.0030	0.0060	1	EPA 8260C Certifications: CTDOH,NELAC-NY10854,NJDEP	09/14/2016 18:55	09/15/2016 06:51	SS
108-67-8	1,3,5-Trimethylbenzene	ND		mg/kg dry	0.0030	0.0060	1	EPA 8260C Certifications: CTDOH,NELAC-NY10854,NJDEP	09/14/2016 18:55	09/15/2016 06:51	SS
541-73-1	1,3-Dichlorobenzene	ND		mg/kg dry	0.0030	0.0060	1	EPA 8260C Certifications: CTDOH,NELAC-NY10854,NJDEP,PADEP	09/14/2016 18:55	09/15/2016 06:51	SS
106-46-7	1,4-Dichlorobenzene	ND		mg/kg dry	0.0030	0.0060	1	EPA 8260C Certifications: CTDOH,NELAC-NY10854,NJDEP,PADEP	09/14/2016 18:55	09/15/2016 06:51	SS
123-91-1	1,4-Dioxane	ND		mg/kg dry	0.060	0.12	1	EPA 8260C Certifications: NELAC-NY10854,NJDEP	09/14/2016 18:55	09/15/2016 06:51	SS
78-93-3	2-Butanone	ND		mg/kg dry	0.0030	0.0060	1	EPA 8260C Certifications: CTDOH,NELAC-NY10854,NJDEP	09/14/2016 18:55	09/15/2016 06:51	SS
591-78-6	2-Hexanone	ND		mg/kg dry	0.0030	0.0060	1	EPA 8260C Certifications: CTDOH,NELAC-NY10854,NJDEP	09/14/2016 18:55	09/15/2016 06:51	SS
108-10-1	4-Methyl-2-pentanone	ND		mg/kg dry	0.0030	0.0060	1	EPA 8260C Certifications: CTDOH,NELAC-NY10854,NJDEP	09/14/2016 18:55	09/15/2016 06:51	SS
67-64-1	**Acetone**	**0.0074**	J	mg/kg dry	0.0060	0.012	1	EPA 8260C Certifications: CTDOH,NELAC-NY10854,NJDEP	09/14/2016 18:55	09/15/2016 06:51	SS
107-02-8	Acrolein	ND		mg/kg dry	0.0060	0.012	1	EPA 8260C Certifications: CTDOH,NELAC-NY10854,NJDEP	09/14/2016 18:55	09/15/2016 06:51	SS
107-13-1	Acrylonitrile	ND		mg/kg dry	0.0030	0.0060	1	EPA 8260C Certifications: CTDOH,NELAC-NY10854,NJDEP	09/14/2016 18:55	09/15/2016 06:51	SS
71-43-2	Benzene	ND		mg/kg dry	0.0030	0.0060	1	EPA 8260C Certifications: CTDOH,NELAC-NY10854,NJDEP,PADEP	09/14/2016 18:55	09/15/2016 06:51	SS
74-97-5	Bromochloromethane	ND		mg/kg dry	0.0030	0.0060	1	EPA 8260C Certifications: NELAC-NY10854,NJDEP	09/14/2016 18:55	09/15/2016 06:51	SS
75-27-4	Bromodichloromethane	ND		mg/kg dry	0.0030	0.0060	1	EPA 8260C Certifications: CTDOH,NELAC-NY10854,NJDEP,PADEP	09/14/2016 18:55	09/15/2016 06:51	SS
75-25-2	Bromoform	ND		mg/kg dry	0.0030	0.0060	1	EPA 8260C Certifications: CTDOH,NELAC-NY10854,NJDEP,PADEP	09/14/2016 18:55	09/15/2016 06:51	SS

Sample Information

Client Sample ID: SB-10-14.5-15.0' **York Sample ID:** 16I0323-19

York Project (SDG) No.	Client Project ID	Matrix	Collection Date/Time	Date Received
16I0323	BEGS or OEGS (15-008-0265)	Soil	September 8, 2016 2:30 pm	09/09/2016

Volatile Organics, 8260 - Comprehensive

Log-in Notes: VOA-CONT **Sample Notes:** VOA-CONT

Sample Prepared by Method: EPA 5035A

CAS No.	Parameter	Result	Flag	Units	Reported to LOD/MDL	LOQ	Dilution	Reference Method	Date/Time Prepared	Date/Time Analyzed	Analyst
74-83-9	Bromomethane	ND		mg/kg dry	0.0030	0.0060	1	EPA 8260C Certifications: CTDOH,NELAC-NY10854,NJDEP,PADEP	09/14/2016 18:55	09/15/2016 06:51	SS
75-15-0	Carbon disulfide	ND		mg/kg dry	0.0030	0.0060	1	EPA 8260C Certifications: CTDOH,NELAC-NY10854,NJDEP	09/14/2016 18:55	09/15/2016 06:51	SS
56-23-5	Carbon tetrachloride	ND		mg/kg dry	0.0030	0.0060	1	EPA 8260C Certifications: CTDOH,NELAC-NY10854,NJDEP,PADEP	09/14/2016 18:55	09/15/2016 06:51	SS
108-90-7	Chlorobenzene	ND		mg/kg dry	0.0030	0.0060	1	EPA 8260C Certifications: CTDOH,NELAC-NY10854,NJDEP,PADEP	09/14/2016 18:55	09/15/2016 06:51	SS
75-00-3	Chloroethane	ND		mg/kg dry	0.0030	0.0060	1	EPA 8260C Certifications: CTDOH,NELAC-NY10854,NJDEP,PADEP	09/14/2016 18:55	09/15/2016 06:51	SS
67-66-3	Chloroform	ND		mg/kg dry	0.0030	0.0060	1	EPA 8260C Certifications: CTDOH,NELAC-NY10854,NJDEP,PADEP	09/14/2016 18:55	09/15/2016 06:51	SS
74-87-3	Chloromethane	ND		mg/kg dry	0.0030	0.0060	1	EPA 8260C Certifications: CTDOH,NELAC-NY10854,NJDEP,PADEP	09/14/2016 18:55	09/15/2016 06:51	SS
[illegible]59-2	cis-1,2-Dichloroethylene	ND		mg/kg dry	0.0030	0.0060	1	EPA 8260C Certifications: CTDOH,NELAC-NY10854,NJDEP	09/14/2016 18:55	09/15/2016 06:51	SS
10061-01-5	cis-1,3-Dichloropropylene	ND		mg/kg dry	0.0030	0.0060	1	EPA 8260C Certifications: CTDOH,NELAC-NY10854,NJDEP,PADEP	09/14/2016 18:55	09/15/2016 06:51	SS
110-82-7	Cyclohexane	ND		mg/kg dry	0.0030	0.0060	1	EPA 8260C Certifications: NELAC-NY10854,NJDEP	09/14/2016 18:55	09/15/2016 06:51	SS
124-48-1	Dibromochloromethane	ND		mg/kg dry	0.0030	0.0060	1	EPA 8260C Certifications: NELAC-NY10854,NJDEP,PADEP	09/14/2016 18:55	09/15/2016 06:51	SS
74-95-3	Dibromomethane	ND		mg/kg dry	0.0030	0.0060	1	EPA 8260C Certifications: NELAC-NY10854,NJDEP	09/14/2016 18:55	09/15/2016 06:51	SS
75-71-8	Dichlorodifluoromethane	ND		mg/kg dry	0.0030	0.0060	1	EPA 8260C Certifications: NELAC-NY10854,NJDEP	09/14/2016 18:55	09/15/2016 06:51	SS
100-41-4	Ethyl Benzene	ND		mg/kg dry	0.0030	0.0060	1	EPA 8260C Certifications: CTDOH,NELAC-NY10854,NJDEP,PADEP	09/14/2016 18:55	09/15/2016 06:51	SS
87-68-3	Hexachlorobutadiene	ND		mg/kg dry	0.0030	0.0060	1	EPA 8260C Certifications: NELAC-NY10854,NJDEP	09/14/2016 18:55	09/15/2016 06:51	SS
98-82-8	Isopropylbenzene	ND		mg/kg dry	0.0030	0.0060	1	EPA 8260C Certifications: CTDOH,NELAC-NY10854,NJDEP	09/14/2016 18:55	09/15/2016 06:51	SS
79-20-9	Methyl acetate	ND		mg/kg dry	0.0030	0.0060	1	EPA 8260C Certifications: NELAC-NY10854,NJDEP	09/14/2016 18:55	09/15/2016 06:51	SS
1634-04-4	Methyl tert-butyl ether (MTBE)	ND		mg/kg dry	0.0030	0.0060	1	EPA 8260C Certifications: CTDOH,NELAC-NY10854,NJDEP	09/14/2016 18:55	09/15/2016 06:51	SS
108-87-2	Methylcyclohexane	ND		mg/kg dry	0.0030	0.0060	1	EPA 8260C Certifications: NELAC-NY10854,NJDEP	09/14/2016 18:55	09/15/2016 06:51	SS
75-09-2	Methylene chloride	ND		mg/kg dry	0.0060	0.012	1	EPA 8260C Certifications: CTDOH,NELAC-NY10854,NJDEP,PADEP	09/14/2016 18:55	09/15/2016 06:51	SS
104-51-8	n-Butylbenzene	ND		mg/kg dry	0.0030	0.0060	1	EPA 8260C Certifications: CTDOH,NELAC-NY10854,NJDEP	09/14/2016 18:55	09/15/2016 06:51	SS
[illegible]65-1	n-Propylbenzene	ND		mg/kg dry	0.0030	0.0060	1	EPA 8260C Certifications: CTDOH,NELAC-NY10854,NJDEP	09/14/2016 18:55	09/15/2016 06:51	SS

Sample Information

Client Sample ID: SB-10-14.5-15.0' **York Sample ID:** 16I0323-19

York Project (SDG) No.	Client Project ID	Matrix	Collection Date/Time	Date Received
16I0323	BEGS or OEGS (15-008-0265)	Soil	September 8, 2016 2:30 pm	09/09/2016

Volatile Organics, 8260 - Comprehensive

Log-in Notes: VOA-CONT **Sample Notes:** VOA-CONT

Sample Prepared by Method: EPA 5035A

CAS No.	Parameter	Result	Flag	Units	Reported to LOD/MDL	LOQ	Dilution	Reference Method	Date/Time Prepared	Date/Time Analyzed	Analyst
95-47-6	o-Xylene	ND		mg/kg dry	0.0030	0.0060	1	EPA 8260C Certifications: CTDOH,NELAC-NY10854	09/14/2016 18:55	09/15/2016 06:51	SS
179601-23-1	p- & m- Xylenes	ND		mg/kg dry	0.0060	0.012	1	EPA 8260C Certifications: CTDOH,NELAC-NY10854	09/14/2016 18:55	09/15/2016 06:51	SS
99-87-6	p-Isopropyltoluene	ND		mg/kg dry	0.0030	0.0060	1	EPA 8260C Certifications: CTDOH,NELAC-NY10854,NJDEP	09/14/2016 18:55	09/15/2016 06:51	SS
135-98-8	sec-Butylbenzene	ND		mg/kg dry	0.0030	0.0060	1	EPA 8260C Certifications: CTDOH,NELAC-NY10854,NJDEP	09/14/2016 18:55	09/15/2016 06:51	SS
100-42-5	Styrene	ND		mg/kg dry	0.0030	0.0060	1	EPA 8260C Certifications: CTDOH,NELAC-NY10854,NJDEP	09/14/2016 18:55	09/15/2016 06:51	SS
75-65-0	tert-Butyl alcohol (TBA)	ND		mg/kg dry	0.0030	0.0060	1	EPA 8260C Certifications: NELAC-NY10854,NJDEP	09/14/2016 18:55	09/15/2016 06:51	SS
98-06-6	tert-Butylbenzene	ND		mg/kg dry	0.0030	0.0060	1	EPA 8260C Certifications: CTDOH,NELAC-NY10854,NJDEP	09/14/2016 18:55	09/15/2016 06:51	SS
127-18-4	Tetrachloroethylene	ND		mg/kg dry	0.0030	0.0060	1	EPA 8260C Certifications: CTDOH,NELAC-NY10854,NJDEP,PADEP	09/14/2016 18:55	09/15/2016 06:51	SS
108-88-3	Toluene	ND		mg/kg dry	0.0030	0.0060	1	EPA 8260C Certifications: CTDOH,NELAC-NY10854,NJDEP,PADEP	09/14/2016 18:55	09/15/2016 06:51	SS
156-60-5	trans-1,2-Dichloroethylene	ND		mg/kg dry	0.0030	0.0060	1	EPA 8260C Certifications: CTDOH,NELAC-NY10854,NJDEP	09/14/2016 18:55	09/15/2016 06:51	SS
10061-02-6	trans-1,3-Dichloropropylene	ND		mg/kg dry	0.0030	0.0060	1	EPA 8260C Certifications: CTDOH,NELAC-NY10854,NJDEP,PADEP	09/14/2016 18:55	09/15/2016 06:51	SS
79-01-6	Trichloroethylene	ND		mg/kg dry	0.0030	0.0060	1	EPA 8260C Certifications: CTDOH,NELAC-NY10854,NJDEP,PADEP	09/14/2016 18:55	09/15/2016 06:51	SS
75-69-4	Trichlorofluoromethane	ND		mg/kg dry	0.0030	0.0060	1	EPA 8260C Certifications: CTDOH,NELAC-NY10854,NJDEP,PADEP	09/14/2016 18:55	09/15/2016 06:51	SS
75-01-4	Vinyl Chloride	ND		mg/kg dry	0.0030	0.0060	1	EPA 8260C Certifications: CTDOH,NELAC-NY10854,NJDEP,PADEP	09/14/2016 18:55	09/15/2016 06:51	SS
1330-20-7	Xylenes, Total	ND		mg/kg dry	0.0090	0.018	1	EPA 8260C Certifications: CTDOH,NELAC-NY10854,NJDEP,PADEP	09/14/2016 18:55	09/15/2016 06:51	SS

	Surrogate Recoveries	Result	Acceptance Range
17060-07-0	*Surrogate: 1,2-Dichloroethane-d4*	*90.8 %*	*77-125*
2037-26-5	*Surrogate: Toluene-d8*	*101 %*	*85-120*
460-00-4	*Surrogate: p-Bromofluorobenzene*	*106 %*	*76-130*

Total Solids

Log-in Notes: VOA-CONT **Sample Notes:**

Sample Prepared by Method: % Solids Prep

CAS No.	Parameter	Result	Flag	Units	LOD/MDL	Reported to LOQ	Dilution	Reference Method	Date/Time Prepared	Date/Time Analyzed	Analyst
solids	*** % Solids**	**83.0**		%	0.100	0.100	1	SM 2540G Certifications: CTDOH	09/15/2016 08:06	09/15/2016 15:16	LAB

Sample Information

Client Sample ID: SB-10-Comp

York Sample ID: 16I0323-20

York Project (SDG) No.	Client Project ID	Matrix	Collection Date/Time	Date Received
16I0323	BEGS or OEGS (15-008-0265)	Soil	September 8, 2016 2:35 pm	09/09/2016

Semi-Volatiles, PAH Target List

Log-in Notes: VOA-CONT **Sample Notes:**

Sample Prepared by Method: EPA 3550C

CAS No.	Parameter	Result	Flag	Units	Reported to LOD/MDL	LOQ	Dilution	Reference Method	Date/Time Prepared	Date/Time Analyzed	Analyst
91-57-6	2-Methylnaphthalene	ND		mg/kg dry	0.0471	0.0940	2	EPA 8270D Certifications: CTDOH,NELAC-NY10854,NJDEP,PADEP	09/15/2016 08:12	09/15/2016 18:17	KH
83-32-9	Acenaphthene	ND		mg/kg dry	0.0471	0.0940	2	EPA 8270D Certifications: CTDOH,NELAC-NY10854,NJDEP,PADEP	09/15/2016 08:12	09/15/2016 18:17	KH
208-96-8	Acenaphthylene	ND		mg/kg dry	0.0471	0.0940	2	EPA 8270D Certifications: CTDOH,NELAC-NY10854,NJDEP,PADEP	09/15/2016 08:12	09/15/2016 18:17	KH
120-12-7	Anthracene	ND		mg/kg dry	0.0471	0.0940	2	EPA 8270D Certifications: CTDOH,NELAC-NY10854,NJDEP,PADEP	09/15/2016 08:12	09/15/2016 18:17	KH
56-55-3	Benzo(a)anthracene	ND		mg/kg dry	0.0471	0.0940	2	EPA 8270D Certifications: CTDOH,NELAC-NY10854,NJDEP,PADEP	09/15/2016 08:12	09/15/2016 18:17	KH
50-32-8	Benzo(a)pyrene	ND		mg/kg dry	0.0471	0.0940	2	EPA 8270D Certifications: CTDOH,NELAC-NY10854,NJDEP,PADEP	09/15/2016 08:12	09/15/2016 18:17	KH
[illegible]-99-2	Benzo(b)fluoranthene	ND		mg/kg dry	0.0471	0.0940	2	EPA 8270D Certifications: CTDOH,NELAC-NY10854,NJDEP,PADEP	09/15/2016 08:12	09/15/2016 18:17	KH
191-24-2	Benzo(g,h,i)perylene	ND		mg/kg dry	0.0471	0.0940	2	EPA 8270D Certifications: CTDOH,NELAC-NY10854,NJDEP,PADEP	09/15/2016 08:12	09/15/2016 18:17	KH
207-08-9	Benzo(k)fluoranthene	ND		mg/kg dry	0.0471	0.0940	2	EPA 8270D Certifications: CTDOH,NELAC-NY10854,NJDEP,PADEP	09/15/2016 08:12	09/15/2016 18:17	KH
218-01-9	Chrysene	ND		mg/kg dry	0.0471	0.0940	2	EPA 8270D Certifications: CTDOH,NELAC-NY10854,NJDEP,PADEP	09/15/2016 08:12	09/15/2016 18:17	KH
53-70-3	Dibenzo(a,h)anthracene	ND		mg/kg dry	0.0471	0.0940	2	EPA 8270D Certifications: CTDOH,NELAC-NY10854,NJDEP,PADEP	09/15/2016 08:12	09/15/2016 18:17	KH
206-44-0	Fluoranthene	ND		mg/kg dry	0.0471	0.0940	2	EPA 8270D Certifications: CTDOH,NELAC-NY10854,NJDEP,PADEP	09/15/2016 08:12	09/15/2016 18:17	KH
86-73-7	Fluorene	ND		mg/kg dry	0.0471	0.0940	2	EPA 8270D Certifications: NELAC-NY10854,NJDEP,PADEP	09/15/2016 08:12	09/15/2016 18:17	KH
193-39-5	Indeno(1,2,3-cd)pyrene	ND		mg/kg dry	0.0471	0.0940	2	EPA 8270D Certifications: CTDOH,NELAC-NY10854,NJDEP,PADEP	09/15/2016 08:12	09/15/2016 18:17	KH
91-20-3	Naphthalene	ND		mg/kg dry	0.0471	0.0940	2	EPA 8270D Certifications: CTDOH,NELAC-NY10854,NJDEP,PADEP	09/15/2016 08:12	09/15/2016 18:17	KH
85-01-8	Phenanthrene	ND		mg/kg dry	0.0471	0.0940	2	EPA 8270D Certifications: CTDOH,NELAC-NY10854,NJDEP,PADEP	09/15/2016 08:12	09/15/2016 18:17	KH
129-00-0	Pyrene	ND		mg/kg dry	0.0471	0.0940	2	EPA 8270D Certifications: CTDOH,NELAC-NY10854,NJDEP,PADEP	09/15/2016 08:12	09/15/2016 18:17	KH

	Surrogate Recoveries	Result	Acceptance Range
4165-60-0	*Surrogate: Nitrobenzene-d5*	*51.5 %*	*22-108*
321-60-8	*Surrogate: 2-Fluorobiphenyl*	*44.7 %*	*21-113*
1718-51-0	*Surrogate: Terphenyl-d14*	*43.1 %*	*24-116*

[illegible]ychlorinated Biphenyls (PCB)

Log-in Notes: VOA-CONT **Sample Notes:**

Sample Information

Client Sample ID: SB-10-Comp **York Sample ID:** 16I0323-20

York Project (SDG) No.	Client Project ID	Matrix	Collection Date/Time	Date Received
16I0323	BEGS or OEGS (15-008-0265)	Soil	September 8, 2016 2:35 pm	09/09/2016

Sample Prepared by Method: EPA 3550C

CAS No.	Parameter	Result	Flag	Units	LOD/MDL	Reported to LOQ	Dilution	Reference Method	Date/Time Prepared	Date/Time Analyzed	Analyst
12674-11-2	Aroclor 1016	ND		mg/kg dry	0.0188	0.0188	1	EPA 8082A	09/13/2016 09:10	09/14/2016 02:29	AMC
								Certifications: NELAC-NY10854,CTDOH,NJDEP,PADEP			
11104-28-2	Aroclor 1221	ND		mg/kg dry	0.0188	0.0188	1	EPA 8082A	09/13/2016 09:10	09/14/2016 02:29	AMC
								Certifications: NELAC-NY10854,CTDOH,NJDEP,PADEP			
11141-16-5	Aroclor 1232	ND		mg/kg dry	0.0188	0.0188	1	EPA 8082A	09/13/2016 09:10	09/14/2016 02:29	AMC
								Certifications: NELAC-NY10854,CTDOH,NJDEP,PADEP			
53469-21-9	Aroclor 1242	ND		mg/kg dry	0.0188	0.0188	1	EPA 8082A	09/13/2016 09:10	09/14/2016 02:29	AMC
								Certifications: NELAC-NY10854,CTDOH,NJDEP,PADEP			
12672-29-6	Aroclor 1248	ND		mg/kg dry	0.0188	0.0188	1	EPA 8082A	09/13/2016 09:10	09/14/2016 02:29	AMC
								Certifications: NELAC-NY10854,CTDOH,NJDEP,PADEP			
11097-69-1	Aroclor 1254	ND		mg/kg dry	0.0188	0.0188	1	EPA 8082A	09/13/2016 09:10	09/14/2016 02:29	AMC
								Certifications: NELAC-NY10854,CTDOH,NJDEP,PADEP			
11096-82-5	Aroclor 1260	ND		mg/kg dry	0.0188	0.0188	1	EPA 8082A	09/13/2016 09:10	09/14/2016 02:29	AMC
								Certifications: NELAC-NY10854,CTDOH,NJDEP,PADEP			
1336-36-3	* Total PCBs	ND		mg/kg dry	0.0188	0.0188	1	EPA 8082A	09/13/2016 09:10	09/14/2016 02:29	AMC
								Certifications:			

	Surrogate Recoveries	Result	Acceptance Range
877-09-8	*Surrogate: Tetrachloro-m-xylene*	*53.5 %*	*30-140*
2051-24-3	*Surrogate: Decachlorobiphenyl*	*43.5 %*	*30-140*

Total Petroleum Hydrocarbons-DRO (C10-C28)

Log-in Notes: VOA-CONT **Sample Notes:**

Sample Prepared by Method: EPA 3550C

CAS No.	Parameter	Result	Flag	Units	LOD/MDL	Reported to LOQ	Dilution	Reference Method	Date/Time Prepared	Date/Time Analyzed	Analyst
	Total Petroleum Hydrocarbons-DRO	ND		mg/kg dry	3.83	11.3	1	EPA 8015D	09/15/2016 07:34	09/15/2016 22:57	AMC
								Certifications: NELAC-NY10854,NJDEP,PADEP			

	Surrogate Recoveries	Result	Acceptance Range
638-68-6	*Surrogate: Triacontane*	*69.3 %*	*30-150*

Total Petroleum Hydrocarbons-GRO (C5-C10)

Log-in Notes: VOA-CONT **Sample Notes:**

Sample Prepared by Method: EPA 5035A

CAS No.	Parameter	Result	Flag	Units	LOD/MDL	Reported to LOQ	Dilution	Reference Method	Date/Time Prepared	Date/Time Analyzed	Analyst
	Total Petroleum Hydrocarbons-GRO	ND		mg/kg dry	45.1	90.2	100	EPA 8015D	09/14/2016 08:58	09/14/2016 23:12	OW
								Certifications: NELAC-NY10854,NJDEP,PADEP			

	Surrogate Recoveries	Result	Acceptance Range
460-00-4	*Surrogate: p-Bromofluorobenzene*	*88.7 %*	*70-130*

Metals, TCLP RCRA

Log-in Notes: VOA-CONT **Sample Notes:**

Sample Prepared by Method: EPA 3015A/1311

CAS No.	Parameter	Result	Flag	Units	LOD/MDL	Reported to LOQ	Dilution	Reference Method	Date/Time Prepared	Date/Time Analyzed	Analyst

Sample Information

Client Sample ID: **SB-10-Comp** **York Sample ID:** **16I0323-20**

York Project (SDG) No.	Client Project ID	Matrix	Collection Date/Time	Date Received
16I0323	BEGS or OEGS (15-008-0265)	Soil	September 8, 2016 2:35 pm	09/09/2016

Metals, TCLP RCRA

Log-in Notes: VOA-CONT **Sample Notes:**

Sample Prepared by Method: EPA 3015A/1311

CAS No.	Parameter	Result	Flag	Units	LOD/MDL	Reported to LOQ	Dilution	Reference Method	Date/Time Prepared	Date/Time Analyzed	Analyst
7440-38-2	Arsenic	ND		mg/L	0.004	0.004	1	EPA 6010C/1311 Certifications: CTDOH,NELAC-NY10854,NJDEP,PADEP	09/14/2016 10:38	09/15/2016 06:38	KV
7440-39-3	**Barium**	**0.214**		mg/L	0.011	0.011	1	EPA 6010C/1311 Certifications: CTDOH,NELAC-NY10854,NJDEP,PADEP	09/14/2016 10:38	09/15/2016 06:38	KV
7440-43-9	Cadmium	ND		mg/L	0.003	0.003	1	EPA 6010C/1311 Certifications: CTDOH,NELAC-NY10854,NJDEP,PADEP	09/14/2016 10:38	09/15/2016 06:38	KV
7440-47-3	Chromium	ND		mg/L	0.006	0.006	1	EPA 6010C/1311 Certifications: CTDOH,NELAC-NY10854,NJDEP,PADEP	09/14/2016 10:38	09/15/2016 06:38	KV
7439-92-1	**Lead**	**0.028**		mg/L	0.003	0.003	1	EPA 6010C/1311 Certifications: CTDOH,NELAC-NY10854,NJDEP,PADEP	09/14/2016 10:38	09/15/2016 06:38	KV
7782-49-2	**Selenium**	**0.018**	M-SeTC	mg/L	0.011	0.011	1	EPA 6010C/1311 Certifications: CTDOH,NELAC-NY10854,NJDEP,PADEP	09/14/2016 10:38	09/15/2016 06:38	KV
7440-22-4	Silver	ND		mg/L	0.006	0.006	1	EPA 6010C/1311 Certifications: CTDOH,NELAC-NY10854,NJDEP,PADEP	09/14/2016 10:38	09/15/2016 06:38	KV

Mercury TCLP by 7473

Log-in Notes: VOA-CONT **Sample Notes:**

Sample Prepared by Method: EPA 7473 water

CAS No.	Parameter	Result	Flag	Units	LOD/MDL	Reported to LOQ	Dilution	Reference Method	Date/Time Prepared	Date/Time Analyzed	Analyst
7439-97-6	Mercury	ND		mg/L	0.0000390	0.000200	1	EPA 7473/1311 Certifications: CTDOH,NJDEP,PADEP,NELAC-NY10854	09/13/2016 12:33	09/14/2016 06:59	ALD

Ignitability

Log-in Notes: VOA-CONT **Sample Notes:**

Sample Prepared by Method: Analysis Preparation

CAS No.	Parameter	Result	Flag	Units	LOD/MDL	Reported to LOQ	Dilution	Reference Method	Date/Time Prepared	Date/Time Analyzed	Analyst
	* Ignitability	Non-Ignit.		-	1	1	1	EPA 1030P Certifications: CTDOH,PADEP	09/13/2016 15:08	09/13/2016 15:40	AD

Total Solids

Log-in Notes: VOA-CONT **Sample Notes:**

Sample Prepared by Method: % Solids Prep

CAS No.	Parameter	Result	Flag	Units	LOD/MDL	Reported to LOQ	Dilution	Reference Method	Date/Time Prepared	Date/Time Analyzed	Analyst
solids	*** % Solids**	**88.7**		%	0.100	0.100	1	SM 2540G Certifications: CTDOH	09/15/2016 08:06	09/15/2016 15:16	LAB

Corrosivity

Log-in Notes: VOA-CONT **Sample Notes:**

Sample Prepared by Method: Analysis Preparation

CAS No.	Parameter	Result	Flag	Units	LOD/MDL	Reported to LOQ	Dilution	Reference Method	Date/Time Prepared	Date/Time Analyzed	Analyst
	pH	**8.19**	HT-pH	pH units		0.500	1	EPA 9045D Certifications: NELAC-NY10854,CTDOH,PADEP	09/13/2016 11:58	09/13/2016 14:32	LAB

Sample Information

Client Sample ID: **SB-10-Comp** **York Sample ID:** **16I0323-20**

York Project (SDG) No.	Client Project ID	Matrix	Collection Date/Time	Date Received
16I0323	BEGS or OEGS (15-008-0265)	Soil	September 8, 2016 2:35 pm	09/09/2016

Reactivity-Cyanide

Log-in Notes: VOA-CONT **Sample Notes:**

Sample Prepared by Method: Analysis Preparation

CAS No.	Parameter	Result	Flag	Units	LOD/MDL	Reported to LOQ	Dilution	Reference Method	Date/Time Prepared	Date/Time Analyzed	Analyst
	* Reactivity - Cyanide	ND		mg/kg	0.250	0.250	1	EPA SW-846 Ch.7.3.3	09/13/2016 08:17	09/13/2016 13:00	AD
								Certifications: CTDOH,PADEP			

Reactivity-Sulfide

Log-in Notes: VOA-CONT **Sample Notes:**

Sample Prepared by Method: Analysis Preparation

CAS No.	Parameter	Result	Flag	Units	LOD/MDL	Reported to LOQ	Dilution	Reference Method	Date/Time Prepared	Date/Time Analyzed	Analyst
	*** Reactivity - Sulfide**	**16.0**		mg/kg	15.0	15.0	1	EPA SW-846 Ch.7.3.4	09/13/2016 08:28	09/13/2016 11:55	LAB
								Certifications: CTDOH,PADEP			

TCLP Extraction for METALS EPA 1311

Log-in Notes: VOA-CONT **Sample Notes:**

Sample Prepared by Method: EPA SW 846-1311 TCLP ext. for metals

CAS No.	Parameter	Result	Flag	Units	LOD/MDL	Reported to LOQ	Dilution	Reference Method	Date/Time Prepared	Date/Time Analyzed	Analyst
	TCLP Extraction	Completed		N/A	1.00	1.00	1	EPA 1311	09/12/2016 18:51	09/13/2016 14:06	TJM
								Certifications: NELAC-NY10854,CTDOH,NJDEP,PADEP			

Volatile Analysis Sample Containers

Lab ID	Client Sample ID	Volatile Sample Container
16I0323-01	SB-01-14.5-15.0'	4 oz. WM Clear Glass Cool to 4° C
16I0323-02	SB-01-Comp	8 oz. WM Clear Glass Cool to 4° C
16I0323-03	SB-02-14.5-15.0'	4 oz. WM Clear Glass Cool to 4° C
16I0323-04	SB-02-Comp	8 oz. WM Clear Glass Cool to 4° C
16I0323-05	SB-04-14.5-15.0'	4 oz. WM Clear Glass Cool to 4° C
16I0323-06	SB-04-Comp	8 oz. WM Clear Glass Cool to 4° C
16I0323-07	SB-05-14.5-15.0'	4 oz. WM Clear Glass Cool to 4° C
16I0323-08	SB-05-Comp	8 oz. WM Clear Glass Cool to 4° C
16I0323-09	SB-17-17.5-18.0'	4 oz. WM Clear Glass Cool to 4° C
16I0323-10	SB-17-Comp	8 oz. WM Clear Glass Cool to 4° C
16I0323-11	SB-03-14.5-15.0'	4 oz. WM Clear Glass Cool to 4° C
16I0323-12	SB-03-Comp	8 oz. WM Clear Glass Cool to 4° C
16I0323-13	SB-14-14.5-15.0'	4 oz. WM Clear Glass Cool to 4° C
16I0323-14	SB-14-Comp	8 oz. WM Clear Glass Cool to 4° C
16I0323-15	SB-15-9.0-9.5'	4 oz. WM Clear Glass Cool to 4° C
16I0323-16	SB-15-Comp	8 oz. WM Clear Glass Cool to 4° C
16I0323-17	SB-16-17.5-18.0'	4 oz. WM Clear Glass Cool to 4° C
16I0323-18	SB-16-Comp	8 oz. WM Clear Glass Cool to 4° C
16I0323-19	SB-10-14.5-15.0'	4 oz. WM Clear Glass Cool to 4° C
16I0323-20	SB-10-Comp	8 oz. WM Clear Glass Cool to 4° C

Notes and Definitions

VOA-CONT NON-COMPLIANT- the container(s) provided by the client for soil volatiles do not meet the requirements of EPA SW846-5035A. Results reported below 200 ug/kg may be biased low due to samples not being collected according to EPA SW846 5035A requirements.

SCAL-E The value reported is ESTIMATED. The value is estimated due to its behavior during initial calibration (average Rf>20%).

QL-02 This LCS analyte is outside Laboratory Recovery limits due the analyte behavior using the referenced method. The reference method has certain limitations with respect to analytes of this nature.

M-SeTC It is noted that a known interference with selenium at the analytical line for analysis by ICP is caused by carbon emission from the TCLP or high organics matrix. The data user may subtract the matrix blank value from the data if needed.

J Detected below the Reporting Limit but greater than or equal to the Method Detection Limit (MDL/LOD) or in the case of a TIC, the result is an estimated concentration.

IGN-01 Non-Ignit.

HT-pH HOLDING TIME EXCEEDED. Samples for pH must be measured in the field or within 15 minutes of sample collection.

EXT-COMP Completed

B Analyte is found in the associated analysis batch blank. For volatiles, methylene chloride and acetone are common lab contaminants.

---

* Analyte is not certified or the state of the samples origination does not offer certification for the Analyte.

ND NOT DETECTED - the analyte is not detected at the Reported to level (LOQ/RL or LOD/MDL)

RL REPORTING LIMIT - the minimum reportable value based upon the lowest point in the analyte calibration curve.

LOQ LIMIT OF QUANTITATION - the minimum concentration of a target analyte that can be reported within a specified degree of confidence. This is the lowest point in an analyte calibration curve that has been subjected to all steps of the processing/analysis and verified to meet defined criteria. This is based upon NELAC 2009 Standards and applies to all analyses.

LOD LIMIT OF DETECTION - a verified estimate of the minimum concentration of a substance in a given matrix that an analytical process can reliably detect. This is based upon NELAC 2009 Standards and applies to all analyses conducted under the auspices of EPA SW-846.

MDL METHOD DETECTION LIMIT - a statistically derived estimate of the minimum amount of a substance an analytical system can reliably detect with a 99% confidence that the concentration of the substance is greater than zero. This is based upon 40 CFR Part 136 Appendix B and applies only to EPA 600 and 200 series methods.

Reported to This indicates that the data for a particular analysis is reported to either the LOD/MDL, or the LOQ/RL. In cases where the "Reported to" is located above the LOD/MDL, any value between this and the LOQ represents an estimated value which is "J" flagged accordingly. This applies to volatile and semi-volatile target compounds only.

NR Not reported

RPD Relative Percent Difference

Wet The data has been reported on an as-received (wet weight) basis

Low Bias Low Bias flag indicates that the recovery of the flagged analyte is below the laboratory or regulatory lower control limit. The data user should take note that this analyte may be biased low but should evaluate multiple lines of evidence including the LCS and site-specific MS/MSD data to draw bias conclusions. In cases where no site-specific MS/MSD was requested, only the LCS data can be used to evaluate such bias.

High Bias High Bias flag indicates that the recovery of the flagged analyte is above the laboratory or regulatory upper control limit. The data user should take note that this analyte may be biased high but should evaluate multiple lines of evidence including the LCS and site-specific MS/MSD data to draw bias conclusions. In cases where no site-specific MS/MSD was requested, only the LCS data can be used to evaluate such bias.

Non-Dir. Non-dir. flag (Non-Directional Bias) indicates that the Relative Percent Difference (RPD) (a measure of precision) among the MS and MSD data is outside the laboratory or regulatory control limit. This alerts the data user where the MS and MSD are from site-specific samples that the RPD is high due to either non-homogeneous distribution of target analyte between the MS/MSD or indicates poor reproducibility for other reasons.

EPA SW-846 method 8270 is included herein it is noted that the target compound N-nitrosodiphenylamine (NDPA) decomposes in the gas chromatographic inlet and cannot be separated from diphenylamine (DPA). These results could actually represent 100% DPA, 100% NDPA or some combination of the two.
For this reason, York reports the combined result for n-nitrosodiphenylamine and diphenylamine for either of these compounds as a combined concentration as Diphenylamine.

If Total PCBs are detected and the target aroclors reported are "Not detected", the Total PCB value is reported due to the presence of either or both Aroclors 1262 and 1268 which are non-target aroclors for some regulatory lists.

2-chloroethylvinyl ether readily breaks down under acidic conditions. Samples that are acid preserved, including standards will exhibit breakdown. The data user should take note.

Certification for pH is no longer offered by NYDOH ELAP.

Semi-Volatile and Volatile analyses are reported down to the LOD/MDL, with values between the LOD/MDL and the LOQ being "J" flagged as estimated results.

For analyses by EPA SW-846-8270D, the Limit of Quantitation (LOQ) reported for benzidine is based upon the lowest standard used for calibration and is not a verified LOQ due to this compound's propensity for oxidative losses during extraction/concentration procedures and non-reproducible chromatographic performance.

YORK ANALYTICAL LABORATORIES
120 RESEARCH DR.
STRATFORD, CT 06615
(203) 325-1371
FAX (203) 357-0166

Field Chain-of-Custody Record

NOTE: York's Std. Terms & Conditions are listed on the back side of this document. This document serves as your written authorization to York to proceed with the analyses requested and your signature binds you to York's Std. Terms & Conditions.

York Project No. 16I0323

YOUR Information	Report To:	Invoice To:	YOUR Project ID	Turn-Around Time	Report Type
Company: Lilo Engineers, Inc	Company: Lilo Engineers	Company:	BEGS- Flatbush Ave Watermain Phase II	RUSH - Same Day ☐	Summary Report ✓
Address: 703 Kosciuszko St. Brooklyn NY 11211	Address: 690 Delaware Buffalo, NY	Address: same as report to	Purchase Order No. As per contract	RUSH - Next Day ☐	Summary w/ QA Summary
Phone No. 929 333 1456	Phone No. 716 882 9645	Phone No.		RUSH - Two Day ☐	CT RCP Package
Contact Person: Eva Jakubowska	Attention: Amy Hewson	Attention:		RUSH - Three Day ☐	CTRCP DQA/DUE Pkg
E-Mail Address: —	E-Mail Address: hewsona@lilo.com	E-Mail Address:	Samples from: CT ___ NY X NJ ___	RUSH - Four Day ☐	NY ASP A Package
				Standard (5-7 Days) ✓	NY ASP B Package
					NJDEP Red. Deliv.
					Electronic Data Deliverables (EDD)
					Simple Excel ✓
					NYSDEC EQuIS
					EQuIS (std)
					EZ-EDD (EQuIS)
					NJDEP SRP HazSite EDD
					GIS/KEY (std)
					Other PDF
					York Regulatory Comparison
					Excel Spreadsheet
					Compare to the following Regs. (please fill in):

Print Clearly and Legibly. All Information must be complete. Samples will NOT be logged in and the turn-around time clock will not begin until any questions by York are resolved.

Eva [signature]
Samples Collected/Authorized By (Signature)

EVA JAKUBOWSKA
Name (printed)

HAZ. - 188

Matrix Codes
S - soil
Other - specify(oil, etc.)
WW - wastewater
GW - groundwater
DW - drinking water
Air-A - ambient air
Air-SV - soil vapor

Volatiles		Semi-Vols.	Pest/PCB/Herb	Metals	Misc. Org.	Full Lists	Misc.
8260 full	TICs	8270 or 625	8082PCB	RCRA8	TPH GRO	Pri.Poll.	Corrosivity
624	Site Spec.	STARS list	8081Pest	PP13 list	TPH DRO	TCL Organics	Reactivity
STARS list	Nassau Co.	BN Only	8151Herb	TAL	CT ETPH	TAL Met/CN	Ignitability
BTEX	Suffolk Co.	Acids Only	CT RCP	CT15 list	NY 310-13	Full TCLP	Flash Point
MTBE	Ketones	PAH list	App. IX	TAGM list	TPH 1664	Full App. IX	Sieve Anal.
TCL list	Oxygenates	TAGM list	Site Spec.	NJDEP list	Air TO14A	Part360-Routine	Heterotrophs
TAGM list	TCLP list	CT RCP list	SPLP or TCLP	Total	Air TO15	Part360-Baseline	TOX
CT RCP list	524.2	TCL list	TCLP Pest	Dissolved	Air STARS	Part360-Expanded No Dioxins/Furans	BTU/lb.
Arom. only	502.2	NJDEP list	TCLP Herb	SPLP or TCLP	Air VPH	Part360-Expanded Full List	Aquatic Tox.
Halog.only	NJDEP list	App. IX	Chlordane	Indiv.Metals	Air TICs	NYCDEP Sewer	TOC
App.IX list	SPLP or TCLP	TCLP BNA	608 Pest	LIST Below	Methane	NYSDEC Sewer	Asbestos
8021B list		SPLP or TCLP	608 PCB		Helium	TAGM	Silica

Sample Identification	Date/Time Sampled	Sample Matrix	Choose Analyses Needed from the Menu Above and Enter Below	Container Description(s)
SB-01-14.5-15.0'	9/7/16 1010	soil	TCL VOCs, PAHs, PCBs, TPHC DRO/GRO,	2 8oz & 1 4oz
SB-01-comp	1015	soil	RCRA Characteristics, & TCLP RCRA Metals	
SB-02-14.5-15.0'	1045	soil		
SB-02-comp	1050			
SB-04-14.5-15.0'	1330			
SB-04-comp	1340			
SB-05-14.5-15.0'	1145			
SB-05-comp	1200			
SB-17-17.5-18.0'	1430			
SB-17-comp	1440			

Comments

Preservation Check those Applicable: 4°C ✓ Frozen ___ HCl ___ MeOH ___ HNO$_3$ ___ H$_2$SO$_4$ ___ NaOH ___ ZnAc ___ Ascorbic Acid ___ Other ___

Special Instructions
Field Filtered ☐
Lab to Filter ☐

Samples Relinquished By	Date/Time	Samples Received By	Date/Time
Eva [signature]	9/9/16	[signature]	9-9-16 11:25
Samples Relinquished By	Date/Time	Samples Received in LAB by	Date/Time
		L. Bravo	9/9/16 1510

Temperature on Receipt 7.4 °C

YORK ANALYTICAL LABORATORIES
120 RESEARCH DR.
STRATFORD, CT 06615
(203) 325-1371
FAX (203) 357-0166

Field Chain-of-Custody Record

NOTE: York's Std. Terms & Conditions are listed on the back side of this document.
This document serves as your written authorization to York to proceed with the analyses requested and your signature binds you to York's Std. Terms & Conditions.

York Project No. 16I0323

YOUR Information	Report To:	Invoice To:	YOUR Project ID	Turn-Around Time	Report Type
Company: Liro Engineers, Inc	Company: LIRO	Company:	BEGS - Flatbush Ave watermain Phase II	RUSH - Same Day ☐	Summary Report ✓
Address: 703 Gravesend Str Brooklyn, NY 11211	Address: 690 Delaware Ave Buffalo, NY	Address: same as Report to	Purchase Order No. —	RUSH - Next Day ☐	Summary w/ QA Summary
Phone No. 929 333 1456	Phone No. 716 882 9645	Phone No.		RUSH - Two Day ☐	CT RCP Package
Contact Person: Eva Jakubowska	Attention: Amy Hewson	Attention:		RUSH - Three Day ☐	CTRCP DQA/DUE Pkg
E-Mail Address: —	E-Mail Address: hewsona@liro.com	E-Mail Address:	Samples from: CT ___ NY ✓ NJ ___	RUSH - Four Day ☐	NY ASP A Package
				Standard (5-7 Days) ✓	NY ASP B Package
					NJDEP Red. Deliv.
					Electronic Data Deliverables (EDD)
					Simple Excel ✓
					NYSDEC EQuIS
					EQuIS (std)
					EZ-EDD (EQuIS)
					NJDEP SRP HazSite EDD
					GIS/KEY (std)
					Other PDF
					York Regulatory Comparison
					Excel Spreadsheet
					Compare to the following Regs. (please fill in):

Print Clearly and Legibly. All Information must be complete. Samples will NOT be logged in and the turn-around time clock will not begin until any questions by York are resolved.

Eva [signature]
Samples Collected/Authorized By (Signature)

EVA JAKUBOWSKA
Name (printed)

HAZ. - 89

Matrix Codes
S - soil
Other - specify (oil, etc.)
WW - wastewater
GW - groundwater
DW - drinking water
Air-A - ambient air
Air-SV - soil vapor

Volatiles		Semi-Vols.	Pest/PCB/Herb	Metals	Misc. Org.	Full Lists	Misc.
8260 full	TICs	8270 or 625	8082PCB	RCRA8	TPH GRO	Pri.Poll.	Corrosivity
624	Site Spec.	STARS list	8081Pest	PP13 list	TPH DRO	TCL Organics	Reactivity
STARS list	Nassau Co.	BN Only	8151Herb	TAL	CT ETPH	TAL MetCN	Ignitability
BTEX	Suffolk Co.	Acids Only	CT RCP	CT15 list	NY 310-13	Full TCLP	Flash Point
MTBE	Ketones	PAH list	App. IX	TAGM list	TPH 1664	Full App. IX	Sieve Anal.
TCL list	Oxygenates	TAGM list	Site Spec.	NJDEP list	Air TO14A	Part 360-Routine	Heterotrophs
TAGM list	TCLP list	CT RCP list	SPLP or TCLP	Total	Air TO15	Part 360-Baseline	TOX
CT RCP list	524.2	TCL list	TCLP Pest	Dissolved	Air STARS	Part 360-Expanded Not Detailed Forms	BTU/lb.
Arom. only	502.2	NJDEP list	TCLP Herb	SPLP or TCLP	Air VPH	Part 360-Expanded Full List	Aquatic Tox.
Halog.only	NJDEP list	App. IX	Chlordane	Indv. Metals	Air TICs	NYCDEP Sewer	TOC
App.IX list	SPLP or TCLP	TCLP BNA	608 Pest	LIST Below	Methane	NYSDEC Sewer	Asbestos
8021B list		SPLP or TCLP	608 PCB		Helium	TAGM	Silica

Sample Identification	Date/Time Sampled	Sample Matrix	Choose Analyses Needed from the Menu Above and Enter Below	Container Description(s)
SB-03-14.5-15.0'	9/8/16 0945	soil	TCL VOCs, PAHs, PCBs, TPHC DRO/GRO, RCRA characteristics, & TCLP RCRA Metals	2 8oz. & 1 4oz.
SB-03-comp	0950	soil		
SB-14-14.5-15.0'	1050	soil		
SB-14-comp	1055			
SB-15-9.0-9.5'	1150			
SB-15-comp	1200			
SB-16-17.5-18.0'	1330			
SB-16-comp	1340			
SB-10-14.5-15.0'	1430			
SB-10-comp	1435			

Comments

Preservation Check those Applicable: 4°C ✓ Frozen ___ HCl ___ MeOH ___ HNO_3 ___ H_2SO_4 ___ NaOH ___ ZnAc ___ Ascorbic Acid ___ Other ___

Special Instructions
Field Filtered ☐
Lab to Filter ☐

Eva [signature]	9/9/16	[signature]	9-09-16 11:45
Samples Relinquished By	Date/Time	Samples Received By	Date/Time
		H. Braden	9/9/16 1516
Samples Relinquished By	Date/Time	Samples Received in LAB by	Date/Time

Temperature on Receipt 7.4 °C

Technical Report

prepared for:

LiRo Engineers
690 Delaware Ave.
Buffalo NY, 14209-2202
Attention: Amy Hewson

Report Date: 09/20/2016
Client Project ID: BEGS-Flatbush Ave Waterman Phase II 15-008-0265
York Project (SDG) No.: 16I0414

CT Cert. No. PH-0723 New Jersey Cert. No. CT-005 New York Cert. No. 10854 PA Cert. No. 68-04440

120 RESEARCH DRIVE STRATFORD, CT 06615 (203) 325-1371 FAX (203) 357-0166

Report Date: 09/20/2016
Client Project ID: BEGS-Flatbush Ave Waterman Phase II 15-008-0265
York Project (SDG) No.: 16I0414

LiRo Engineers
690 Delaware Ave.
Buffalo NY, 14209-2202
Attention: Amy Hewson

Purpose and Results

This report contains the analytical data for the sample(s) identified on the attached chain-of-custody received in our laboratory on September 13, 2016 and listed below. The project was identified as your project: **BEGS-Flatbush Ave Waterman Phase II 15-008-0265**.

The analyses were conducted utilizing appropriate EPA, Standard Methods, and ASTM methods as detailed in the data summary tables.

All samples were received in proper condition meeting the customary acceptance requirements for environmental samples except those indicated under the Notes section of this report.

All analyses met the method and laboratory standard operating procedure requirements except as indicated by any data flags, the meaning of which are explained in the attachment to this report, and case narrative if applicable.

The results of the analyses, which are all reported on dry weight basis (soils) unless otherwise noted, are detailed in the following pages.

Please contact Client Services at 203.325.1371 with any questions regarding this report.

York Sample ID	Client Sample ID	Matrix	Date Collected	Date Received
16I0414-01	SB-06-14.5-15.0'	Soil	09/12/2016	09/13/2016
16I0414-02	SB-06-Comp	Soil	09/12/2016	09/13/2016
16I0414-03	SB-07-14.5-15.0'	Soil	09/12/2016	09/13/2016
16I0414-04	SB-07-Comp	Soil	09/12/2016	09/13/2016
16I0414-05	SB-08-12.5-13.0'	Soil	09/12/2016	09/13/2016
16I0414-06	SB-08-Comp	Soil	09/12/2016	09/13/2016
16I0414-07	SB-09-9.5-10.0'	Soil	09/12/2016	09/13/2016
16I0414-08	SB-09-Comp	Soil	09/12/2016	09/13/2016
16I0414-09	SB-18-17.5-18.0'	Soil	09/12/2016	09/13/2016
16I0414-10	SB-18-Comp	Soil	09/12/2016	09/13/2016
16I0414-11	SB-12-14.5-15.0'	Soil	09/09/2016	09/13/2016
16I0414-12	SB-12-Comp	Soil	09/09/2016	09/13/2016
16I0414-13	SB-13-14.5-15.0'	Soil	09/09/2016	09/13/2016
16I0414-14	SB-13-Comp	Soil	09/09/2016	09/13/2016
16I0414-15	SB-11-14.5-15.0'	Soil	09/09/2016	09/13/2016
16I0414-16	SB-11-Comp	Soil	09/09/2016	09/13/2016
16I0414-17	SB-20-14.5-15.0'	Soil	09/09/2016	09/13/2016
16I0414-18	SB-20-Comp	Soil	09/09/2016	09/13/2016

General Notes for York Project (SDG) No.: 16I0414

1. The RLs and MDLs (Reporting Limit and Method Detection Limit respectively) reported are adjusted for any dilution necessary due to the levels of target and/or non-target analytes and matrix interference. The RL(REPORTING LIMIT) is based upon the lowest standard utilized for the calibration where applicable.
2. Samples are retained for a period of thirty days after submittal of report, unless other arrangements are made.
3. York's liability for the above data is limited to the dollar value paid to York for the referenced project.
4. This report shall not be reproduced without the written approval of York Analytical Laboratories, Inc.
5. All samples were received in proper condition for analysis with proper documentation, unless otherwise noted.
6. All analyses conducted met method or Laboratory SOP requirements. See the Qualifiers and/or Narrative sections for further information.
7. It is noted that no analyses reported herein were subcontracted to another laboratory, unless noted in the report.
8. This report reflects results that relate only to the samples submitted on the attached chain-of-custody form(s) received by York.

Approved By: **Date:** 09/20/2016

Benjamin Gulizia
Laboratory Director

Sample Information

Client Sample ID: SB-06-14.5-15.0'

York Sample ID: 16I0414-01

York Project (SDG) No.	Client Project ID	Matrix	Collection Date/Time	Date Received
16I0414	BEGS-Flatbush Ave Waterman Phase II 15-008-0265	Soil	September 12, 2016 11:30 am	09/13/2016

Volatile Organics, 8260 - Comprehensive

Log-in Notes: VOA-CONT **Sample Notes:** VOA-CONT

Sample Prepared by Method: EPA 5035A

CAS No.	Parameter	Result	Flag	Units	Reported to LOD/MDL	LOQ	Dilution	Reference Method	Date/Time Prepared	Date/Time Analyzed	Analyst
630-20-6	1,1,1,2-Tetrachloroethane	ND		mg/kg dry	0.0028	0.0057	1	EPA 8260C Certifications: CTDOH,NELAC-NY10854,NJDEP	09/19/2016 08:18	09/19/2016 15:39	SS
71-55-6	1,1,1-Trichloroethane	ND		mg/kg dry	0.0028	0.0057	1	EPA 8260C Certifications: CTDOH,NELAC-NY10854,NJDEP,PADEP	09/19/2016 08:18	09/19/2016 15:39	SS
79-34-5	1,1,2,2-Tetrachloroethane	ND		mg/kg dry	0.0028	0.0057	1	EPA 8260C Certifications: CTDOH,NELAC-NY10854,NJDEP,PADEP	09/19/2016 08:18	09/19/2016 15:39	SS
76-13-1	1,1,2-Trichloro-1,2,2-trifluoroethane (Freon 113)	ND		mg/kg dry	0.0028	0.0057	1	EPA 8260C Certifications: CTDOH,NELAC-NY10854,NJDEP	09/19/2016 08:18	09/19/2016 15:39	SS
79-00-5	1,1,2-Trichloroethane	ND		mg/kg dry	0.0028	0.0057	1	EPA 8260C Certifications: CTDOH,NELAC-NY10854,NJDEP,PADEP	09/19/2016 08:18	09/19/2016 15:39	SS
75-34-3	1,1-Dichloroethane	ND		mg/kg dry	0.0028	0.0057	1	EPA 8260C Certifications: CTDOH,NELAC-NY10854,NJDEP,PADEP	09/19/2016 08:18	09/19/2016 15:39	SS
[illegible]-4	1,1-Dichloroethylene	ND		mg/kg dry	0.0028	0.0057	1	EPA 8260C Certifications: CTDOH,NELAC-NY10854,NJDEP,PADEP	09/19/2016 08:18	09/19/2016 15:39	SS
87-61-6	1,2,3-Trichlorobenzene	ND		mg/kg dry	0.0028	0.0057	1	EPA 8260C Certifications: NELAC-NY10854,NJDEP	09/19/2016 08:18	09/19/2016 15:39	SS
96-18-4	1,2,3-Trichloropropane	ND		mg/kg dry	0.0028	0.0057	1	EPA 8260C Certifications: NELAC-NY10854,NJDEP	09/19/2016 08:18	09/19/2016 15:39	SS
120-82-1	1,2,4-Trichlorobenzene	ND		mg/kg dry	0.0028	0.0057	1	EPA 8260C Certifications: NELAC-NY10854,NJDEP	09/19/2016 08:18	09/19/2016 15:39	SS
95-63-6	1,2,4-Trimethylbenzene	ND		mg/kg dry	0.0028	0.0057	1	EPA 8260C Certifications: CTDOH,NELAC-NY10854,NJDEP	09/19/2016 08:18	09/19/2016 15:39	SS
96-12-8	1,2-Dibromo-3-chloropropane	ND		mg/kg dry	0.0028	0.0057	1	EPA 8260C Certifications: CTDOH,NELAC-NY10854,NJDEP	09/19/2016 08:18	09/19/2016 15:39	SS
106-93-4	1,2-Dibromoethane	ND		mg/kg dry	0.0028	0.0057	1	EPA 8260C Certifications: CTDOH,NELAC-NY10854,NJDEP	09/19/2016 08:18	09/19/2016 15:39	SS
95-50-1	1,2-Dichlorobenzene	ND		mg/kg dry	0.0028	0.0057	1	EPA 8260C Certifications: CTDOH,NELAC-NY10854,NJDEP,PADEP	09/19/2016 08:18	09/19/2016 15:39	SS
107-06-2	1,2-Dichloroethane	ND		mg/kg dry	0.0028	0.0057	1	EPA 8260C Certifications: CTDOH,NELAC-NY10854,NJDEP,PADEP	09/19/2016 08:18	09/19/2016 15:39	SS
78-87-5	1,2-Dichloropropane	ND		mg/kg dry	0.0028	0.0057	1	EPA 8260C Certifications: CTDOH,NELAC-NY10854,NJDEP	09/19/2016 08:18	09/19/2016 15:39	SS
108-67-8	1,3,5-Trimethylbenzene	ND		mg/kg dry	0.0028	0.0057	1	EPA 8260C Certifications: CTDOH,NELAC-NY10854,NJDEP	09/19/2016 08:18	09/19/2016 15:39	SS
541-73-1	1,3-Dichlorobenzene	ND		mg/kg dry	0.0028	0.0057	1	EPA 8260C Certifications: CTDOH,NELAC-NY10854,NJDEP,PADEP	09/19/2016 08:18	09/19/2016 15:39	SS
106-46-7	1,4-Dichlorobenzene	ND		mg/kg dry	0.0028	0.0057	1	EPA 8260C Certifications: CTDOH,NELAC-NY10854,NJDEP,PADEP	09/19/2016 08:18	09/19/2016 15:39	SS
123-91-1	1,4-Dioxane	ND		mg/kg dry	0.057	0.11	1	EPA 8260C Certifications: NELAC-NY10854,NJDEP	09/19/2016 08:18	09/19/2016 15:39	SS
	2-Butanone	ND		mg/kg dry	0.0028	0.0057	1	EPA 8260C Certifications: CTDOH,NELAC-NY10854,NJDEP	09/19/2016 08:18	09/19/2016 15:39	SS

Sample Information

Client Sample ID: SB-06-14.5-15.0'

York Sample ID: 16I0414-01

York Project (SDG) No.	Client Project ID	Matrix	Collection Date/Time	Date Received
16I0414	BEGS-Flatbush Ave Waterman Phase II 15-008-0265	Soil	September 12, 2016 11:30 am	09/13/2016

Volatile Organics, 8260 - Comprehensive

Log-in Notes: VOA-CONT **Sample Notes:** VOA-CONT

Sample Prepared by Method: EPA 5035A

CAS No.	Parameter	Result	Flag	Units	Reported to LOD/MDL	LOQ	Dilution	Reference Method	Date/Time Prepared	Date/Time Analyzed	Analyst
591-78-6	2-Hexanone	ND		mg/kg dry	0.0028	0.0057	1	EPA 8260C Certifications: CTDOH,NELAC-NY10854,NJDEP	09/19/2016 08:18	09/19/2016 15:39	SS
108-10-1	4-Methyl-2-pentanone	ND		mg/kg dry	0.0028	0.0057	1	EPA 8260C Certifications: CTDOH,NELAC-NY10854,NJDEP	09/19/2016 08:18	09/19/2016 15:39	SS
67-64-1	**Acetone**	**0.013**	CCV-E, SCAL-E, B	mg/kg dry	0.0057	0.011	1	EPA 8260C Certifications: CTDOH,NELAC-NY10854,NJDEP	09/19/2016 08:18	09/19/2016 15:39	SS
107-02-8	Acrolein	ND		mg/kg dry	0.0057	0.011	1	EPA 8260C Certifications: CTDOH,NELAC-NY10854,NJDEP	09/19/2016 08:18	09/19/2016 15:39	SS
107-13-1	Acrylonitrile	ND		mg/kg dry	0.0028	0.0057	1	EPA 8260C Certifications: CTDOH,NELAC-NY10854,NJDEP	09/19/2016 08:18	09/19/2016 15:39	SS
71-43-2	Benzene	ND		mg/kg dry	0.0028	0.0057	1	EPA 8260C Certifications: CTDOH,NELAC-NY10854,NJDEP,PADEP	09/19/2016 08:18	09/19/2016 15:39	SS
74-97-5	Bromochloromethane	ND		mg/kg dry	0.0028	0.0057	1	EPA 8260C Certifications: NELAC-NY10854,NJDEP	09/19/2016 08:18	09/19/2016 15:39	SS
75-27-4	Bromodichloromethane	ND		mg/kg dry	0.0028	0.0057	1	EPA 8260C Certifications: CTDOH,NELAC-NY10854,NJDEP,PADEP	09/19/2016 08:18	09/19/2016 15:39	SS
75-25-2	Bromoform	ND		mg/kg dry	0.0028	0.0057	1	EPA 8260C Certifications: CTDOH,NELAC-NY10854,NJDEP,PADEP	09/19/2016 08:18	09/19/2016 15:39	SS
74-83-9	Bromomethane	ND		mg/kg dry	0.0028	0.0057	1	EPA 8260C Certifications: CTDOH,NELAC-NY10854,NJDEP,PADEP	09/19/2016 08:18	09/19/2016 15:39	SS
75-15-0	Carbon disulfide	ND		mg/kg dry	0.0028	0.0057	1	EPA 8260C Certifications: CTDOH,NELAC-NY10854,NJDEP	09/19/2016 08:18	09/19/2016 15:39	SS
56-23-5	Carbon tetrachloride	ND		mg/kg dry	0.0028	0.0057	1	EPA 8260C Certifications: CTDOH,NELAC-NY10854,NJDEP,PADEP	09/19/2016 08:18	09/19/2016 15:39	SS
108-90-7	Chlorobenzene	ND		mg/kg dry	0.0028	0.0057	1	EPA 8260C Certifications: CTDOH,NELAC-NY10854,NJDEP,PADEP	09/19/2016 08:18	09/19/2016 15:39	SS
75-00-3	Chloroethane	ND		mg/kg dry	0.0028	0.0057	1	EPA 8260C Certifications: CTDOH,NELAC-NY10854,NJDEP,PADEP	09/19/2016 08:18	09/19/2016 15:39	SS
67-66-3	Chloroform	ND		mg/kg dry	0.0028	0.0057	1	EPA 8260C Certifications: CTDOH,NELAC-NY10854,NJDEP,PADEP	09/19/2016 08:18	09/19/2016 15:39	SS
74-87-3	Chloromethane	ND		mg/kg dry	0.0028	0.0057	1	EPA 8260C Certifications: CTDOH,NELAC-NY10854,NJDEP,PADEP	09/19/2016 08:18	09/19/2016 15:39	SS
156-59-2	cis-1,2-Dichloroethylene	ND		mg/kg dry	0.0028	0.0057	1	EPA 8260C Certifications: CTDOH,NELAC-NY10854,NJDEP	09/19/2016 08:18	09/19/2016 15:39	SS
10061-01-5	cis-1,3-Dichloropropylene	ND		mg/kg dry	0.0028	0.0057	1	EPA 8260C Certifications: CTDOH,NELAC-NY10854,NJDEP,PADEP	09/19/2016 08:18	09/19/2016 15:39	SS
110-82-7	Cyclohexane	ND		mg/kg dry	0.0028	0.0057	1	EPA 8260C Certifications: NELAC-NY10854,NJDEP	09/19/2016 08:18	09/19/2016 15:39	SS
124-48-1	Dibromochloromethane	ND		mg/kg dry	0.0028	0.0057	1	EPA 8260C Certifications: NELAC-NY10854,NJDEP,PADEP	09/19/2016 08:18	09/19/2016 15:39	SS
74-95-3	Dibromomethane	ND		mg/kg dry	0.0028	0.0057	1	EPA 8260C Certifications: NELAC-NY10854,NJDEP	09/19/2016 08:18	09/19/2016 15:39	S

Sample Information

Client Sample ID: SB-06-14.5-15.0'

York Sample ID: 16I0414-01

York Project (SDG) No.	Client Project ID	Matrix	Collection Date/Time	Date Received
16I0414	BEGS-Flatbush Ave Waterman Phase II 15-008-0265	Soil	September 12, 2016 11:30 am	09/13/2016

Volatile Organics, 8260 - Comprehensive

Log-in Notes: VOA-CONT **Sample Notes:** VOA-CONT

Sample Prepared by Method: EPA 5035A

CAS No.	Parameter	Result	Flag	Units	Reported to LOD/MDL	LOQ	Dilution	Reference Method	Date/Time Prepared	Date/Time Analyzed	Analyst
75-71-8	Dichlorodifluoromethane	ND		mg/kg dry	0.0028	0.0057	1	EPA 8260C Certifications: NELAC-NY10854,NJDEP	09/19/2016 08:18	09/19/2016 15:39	SS
100-41-4	Ethyl Benzene	ND		mg/kg dry	0.0028	0.0057	1	EPA 8260C Certifications: CTDOH,NELAC-NY10854,NJDEP,PADEP	09/19/2016 08:18	09/19/2016 15:39	SS
87-68-3	Hexachlorobutadiene	ND		mg/kg dry	0.0028	0.0057	1	EPA 8260C Certifications: NELAC-NY10854,NJDEP	09/19/2016 08:18	09/19/2016 15:39	SS
98-82-8	Isopropylbenzene	ND		mg/kg dry	0.0028	0.0057	1	EPA 8260C Certifications: CTDOH,NELAC-NY10854,NJDEP	09/19/2016 08:18	09/19/2016 15:39	SS
79-20-9	Methyl acetate	ND		mg/kg dry	0.0028	0.0057	1	EPA 8260C Certifications: NELAC-NY10854,NJDEP	09/19/2016 08:18	09/19/2016 15:39	SS
1634-04-4	Methyl tert-butyl ether (MTBE)	ND		mg/kg dry	0.0028	0.0057	1	EPA 8260C Certifications: CTDOH,NELAC-NY10854,NJDEP	09/19/2016 08:18	09/19/2016 15:39	SS
108-87-2	Methylcyclohexane	ND		mg/kg dry	0.0028	0.0057	1	EPA 8260C Certifications: NELAC-NY10854,NJDEP	09/19/2016 08:18	09/19/2016 15:39	SS
[illegible]9-2	**Methylene chloride**	**0.0080**	J	mg/kg dry	0.0057	0.011	1	EPA 8260C Certifications: CTDOH,NELAC-NY10854,NJDEP,PADEP	09/19/2016 08:18	09/19/2016 15:39	SS
104-51-8	n-Butylbenzene	ND		mg/kg dry	0.0028	0.0057	1	EPA 8260C Certifications: CTDOH,NELAC-NY10854,NJDEP	09/19/2016 08:18	09/19/2016 15:39	SS
103-65-1	n-Propylbenzene	ND		mg/kg dry	0.0028	0.0057	1	EPA 8260C Certifications: CTDOH,NELAC-NY10854,NJDEP	09/19/2016 08:18	09/19/2016 15:39	SS
95-47-6	o-Xylene	ND		mg/kg dry	0.0028	0.0057	1	EPA 8260C Certifications: CTDOH,NELAC-NY10854	09/19/2016 08:18	09/19/2016 15:39	SS
179601-23-1	p- & m- Xylenes	ND		mg/kg dry	0.0057	0.011	1	EPA 8260C Certifications: CTDOH,NELAC-NY10854	09/19/2016 08:18	09/19/2016 15:39	SS
99-87-6	p-Isopropyltoluene	ND		mg/kg dry	0.0028	0.0057	1	EPA 8260C Certifications: CTDOH,NELAC-NY10854,NJDEP	09/19/2016 08:18	09/19/2016 15:39	SS
135-98-8	sec-Butylbenzene	ND		mg/kg dry	0.0028	0.0057	1	EPA 8260C Certifications: CTDOH,NELAC-NY10854,NJDEP	09/19/2016 08:18	09/19/2016 15:39	SS
100-42-5	Styrene	ND		mg/kg dry	0.0028	0.0057	1	EPA 8260C Certifications: CTDOH,NELAC-NY10854,NJDEP	09/19/2016 08:18	09/19/2016 15:39	SS
75-65-0	tert-Butyl alcohol (TBA)	ND		mg/kg dry	0.0028	0.0057	1	EPA 8260C Certifications: NELAC-NY10854,NJDEP	09/19/2016 08:18	09/19/2016 15:39	SS
98-06-6	tert-Butylbenzene	ND		mg/kg dry	0.0028	0.0057	1	EPA 8260C Certifications: CTDOH,NELAC-NY10854,NJDEP	09/19/2016 08:18	09/19/2016 15:39	SS
127-18-4	Tetrachloroethylene	ND		mg/kg dry	0.0028	0.0057	1	EPA 8260C Certifications: CTDOH,NELAC-NY10854,NJDEP,PADEP	09/19/2016 08:18	09/19/2016 15:39	SS
108-88-3	Toluene	ND		mg/kg dry	0.0028	0.0057	1	EPA 8260C Certifications: CTDOH,NELAC-NY10854,NJDEP,PADEP	09/19/2016 08:18	09/19/2016 15:39	SS
156-60-5	trans-1,2-Dichloroethylene	ND		mg/kg dry	0.0028	0.0057	1	EPA 8260C Certifications: CTDOH,NELAC-NY10854,NJDEP	09/19/2016 08:18	09/19/2016 15:39	SS
10061-02-6	trans-1,3-Dichloropropylene	ND		mg/kg dry	0.0028	0.0057	1	EPA 8260C Certifications: CTDOH,NELAC-NY10854,NJDEP,PADEP	09/19/2016 08:18	09/19/2016 15:39	SS
[illegible]-6	Trichloroethylene	ND		mg/kg dry	0.0028	0.0057	1	EPA 8260C Certifications: CTDOH,NELAC-NY10854,NJDEP,PADEP	09/19/2016 08:18	09/19/2016 15:39	SS

Sample Information

Client Sample ID: SB-06-14.5-15.0' **York Sample ID:** 16I0414-01

York Project (SDG) No.	Client Project ID	Matrix	Collection Date/Time	Date Received
16I0414	BEGS-Flatbush Ave Waterman Phase II 15-008-0265	Soil	September 12, 2016 11:30 am	09/13/2016

Volatile Organics, 8260 - Comprehensive **Log-in Notes:** VOA-CONT **Sample Notes:** VOA-CONT

Sample Prepared by Method: EPA 5035A

CAS No.	Parameter	Result	Flag	Units	Reported to LOD/MDL	LOQ	Dilution	Reference Method	Date/Time Prepared	Date/Time Analyzed	Analyst
75-69-4	Trichlorofluoromethane	ND		mg/kg dry	0.0028	0.0057	1	EPA 8260C Certifications: CTDOH,NELAC-NY10854,NJDEP,PADEP	09/19/2016 08:18	09/19/2016 15:39	SS
75-01-4	Vinyl Chloride	ND		mg/kg dry	0.0028	0.0057	1	EPA 8260C Certifications: CTDOH,NELAC-NY10854,NJDEP,PADEP	09/19/2016 08:18	09/19/2016 15:39	SS
1330-20-7	Xylenes, Total	ND		mg/kg dry	0.0085	0.017	1	EPA 8260C Certifications: CTDOH,NELAC-NY10854,NJDEP,PADEP	09/19/2016 08:18	09/19/2016 15:39	SS

	Surrogate Recoveries	Result	Acceptance Range
17060-07-0	*Surrogate: 1,2-Dichloroethane-d4*	*108 %*	*77-125*
2037-26-5	*Surrogate: Toluene-d8*	*94.0 %*	*85-120*
460-00-4	*Surrogate: p-Bromofluorobenzene*	*95.5 %*	*76-130*

Total Solids **Log-in Notes:** VOA-CONT **Sample Notes:**

Sample Prepared by Method: % Solids Prep

CAS No.	Parameter	Result	Flag	Units	LOD/MDL	Reported to LOQ	Dilution	Reference Method	Date/Time Prepared	Date/Time Analyzed	Analyst
solids	*** % Solids**	**88.1**		%	0.100	0.100	1	SM 2540G Certifications: CTDOH	09/19/2016 14:18	09/20/2016 08:04	LAB

Sample Information

Client Sample ID: SB-06-Comp **York Sample ID:** 16I0414-02

York Project (SDG) No.	Client Project ID	Matrix	Collection Date/Time	Date Received
16I0414	BEGS-Flatbush Ave Waterman Phase II 15-008-0265	Soil	September 12, 2016 11:40 am	09/13/2016

Semi-Volatiles, PAH Target List **Log-in Notes:** **Sample Notes:**

Sample Prepared by Method: EPA 3550C

CAS No.	Parameter	Result	Flag	Units	Reported to LOD/MDL	LOQ	Dilution	Reference Method	Date/Time Prepared	Date/Time Analyzed	Analyst
91-57-6	2-Methylnaphthalene	ND		mg/kg dry	0.0473	0.0944	2	EPA 8270D Certifications: CTDOH,NELAC-NY10854,NJDEP,PADEP	09/19/2016 11:58	09/20/2016 10:06	SR
83-32-9	Acenaphthene	ND		mg/kg dry	0.0473	0.0944	2	EPA 8270D Certifications: CTDOH,NELAC-NY10854,NJDEP,PADEP	09/19/2016 11:58	09/20/2016 10:06	SR
208-96-8	Acenaphthylene	ND		mg/kg dry	0.0473	0.0944	2	EPA 8270D Certifications: CTDOH,NELAC-NY10854,NJDEP,PADEP	09/19/2016 11:58	09/20/2016 10:06	SR
120-12-7	Anthracene	ND		mg/kg dry	0.0473	0.0944	2	EPA 8270D Certifications: CTDOH,NELAC-NY10854,NJDEP,PADEP	09/19/2016 11:58	09/20/2016 10:06	SR
56-55-3	Benzo(a)anthracene	ND		mg/kg dry	0.0473	0.0944	2	EPA 8270D Certifications: CTDOH,NELAC-NY10854,NJDEP,PADEP	09/19/2016 11:58	09/20/2016 10:06	SR
50-32-8	Benzo(a)pyrene	ND		mg/kg dry	0.0473	0.0944	2	EPA 8270D Certifications: CTDOH,NELAC-NY10854,NJDEP,PADEP	09/19/2016 11:58	09/20/2016 10:06	SR

Sample Information

Client Sample ID: SB-06-Comp

York Sample ID: 16I0414-02

York Project (SDG) No.	Client Project ID	Matrix	Collection Date/Time	Date Received
16I0414	BEGS-Flatbush Ave Waterman Phase II 15-008-0265	Soil	September 12, 2016 11:40 am	09/13/2016

Semi-Volatiles, PAH Target List

Log-in Notes: **Sample Notes:**

Sample Prepared by Method: EPA 3550C

CAS No.	Parameter	Result	Flag	Units	Reported to LOD/MDL	LOQ	Dilution	Reference Method	Date/Time Prepared	Date/Time Analyzed	Analyst
205-99-2	Benzo(b)fluoranthene	ND		mg/kg dry	0.0473	0.0944	2	EPA 8270D Certifications: CTDOH,NELAC-NY10854,NJDEP,PADEP	09/19/2016 11:58	09/20/2016 10:06	SR
191-24-2	Benzo(g,h,i)perylene	ND		mg/kg dry	0.0473	0.0944	2	EPA 8270D Certifications: CTDOH,NELAC-NY10854,NJDEP,PADEP	09/19/2016 11:58	09/20/2016 10:06	SR
207-08-9	Benzo(k)fluoranthene	ND		mg/kg dry	0.0473	0.0944	2	EPA 8270D Certifications: CTDOH,NELAC-NY10854,NJDEP,PADEP	09/19/2016 11:58	09/20/2016 10:06	SR
218-01-9	Chrysene	ND		mg/kg dry	0.0473	0.0944	2	EPA 8270D Certifications: CTDOH,NELAC-NY10854,NJDEP,PADEP	09/19/2016 11:58	09/20/2016 10:06	SR
53-70-3	Dibenzo(a,h)anthracene	ND		mg/kg dry	0.0473	0.0944	2	EPA 8270D Certifications: CTDOH,NELAC-NY10854,NJDEP,PADEP	09/19/2016 11:58	09/20/2016 10:06	SR
206-44-0	Fluoranthene	ND		mg/kg dry	0.0473	0.0944	2	EPA 8270D Certifications: CTDOH,NELAC-NY10854,NJDEP,PADEP	09/19/2016 11:58	09/20/2016 10:06	SR
86-73-7	Fluorene	ND		mg/kg dry	0.0473	0.0944	2	EPA 8270D Certifications: NELAC-NY10854,NJDEP,PADEP	09/19/2016 11:58	09/20/2016 10:06	SR
[illegible]39-5	Indeno(1,2,3-cd)pyrene	ND		mg/kg dry	0.0473	0.0944	2	EPA 8270D Certifications: CTDOH,NELAC-NY10854,NJDEP,PADEP	09/19/2016 11:58	09/20/2016 10:06	SR
91-20-3	Naphthalene	ND		mg/kg dry	0.0473	0.0944	2	EPA 8270D Certifications: CTDOH,NELAC-NY10854,NJDEP,PADEP	09/19/2016 11:58	09/20/2016 10:06	SR
85-01-8	Phenanthrene	ND		mg/kg dry	0.0473	0.0944	2	EPA 8270D Certifications: CTDOH,NELAC-NY10854,NJDEP,PADEP	09/19/2016 11:58	09/20/2016 10:06	SR
129-00-0	Pyrene	ND		mg/kg dry	0.0473	0.0944	2	EPA 8270D Certifications: CTDOH,NELAC-NY10854,NJDEP,PADEP	09/19/2016 11:58	09/20/2016 10:06	SR

	Surrogate Recoveries	Result	Acceptance Range
4165-60-0	*Surrogate: Nitrobenzene-d5*	*28.4 %*	*22-108*
321-60-8	*Surrogate: 2-Fluorobiphenyl*	*23.6 %*	*21-113*
1718-51-0	*Surrogate: Terphenyl-d14*	*36.0 %*	*24-116*

Polychlorinated Biphenyls (PCB)

Log-in Notes: **Sample Notes:**

Sample Prepared by Method: EPA 3550C

CAS No.	Parameter	Result	Flag	Units	LOD/MDL	Reported to LOQ	Dilution	Reference Method	Date/Time Prepared	Date/Time Analyzed	Analyst
12674-11-2	Aroclor 1016	ND		mg/kg dry	0.0189	0.0189	1	EPA 8082A Certifications: NELAC-NY10854,CTDOH,NJDEP,PADEP	09/20/2016 07:11	09/20/2016 13:25	AMC
11104-28-2	Aroclor 1221	ND		mg/kg dry	0.0189	0.0189	1	EPA 8082A Certifications: NELAC-NY10854,CTDOH,NJDEP,PADEP	09/20/2016 07:11	09/20/2016 13:25	AMC
11141-16-5	Aroclor 1232	ND		mg/kg dry	0.0189	0.0189	1	EPA 8082A Certifications: NELAC-NY10854,CTDOH,NJDEP,PADEP	09/20/2016 07:11	09/20/2016 13:25	AMC
53469-21-9	Aroclor 1242	ND		mg/kg dry	0.0189	0.0189	1	EPA 8082A Certifications: NELAC-NY10854,CTDOH,NJDEP,PADEP	09/20/2016 07:11	09/20/2016 13:25	AMC
12672-29-6	Aroclor 1248	ND		mg/kg dry	0.0189	0.0189	1	EPA 8082A Certifications: NELAC-NY10854,CTDOH,NJDEP,PADEP	09/20/2016 07:11	09/20/2016 13:25	AMC
[illegible]7-69-1	**Aroclor 1254**	**0.0393**		mg/kg dry	0.0189	0.0189	1	EPA 8082A Certifications: NELAC-NY10854,CTDOH,NJDEP,PADEP	09/20/2016 07:11	09/20/2016 13:25	AMC

Sample Information

Client Sample ID: SB-06-Comp

York Sample ID: 16I0414-02

York Project (SDG) No.	Client Project ID	Matrix	Collection Date/Time	Date Received
16I0414	BEGS-Flatbush Ave Waterman Phase II 15-008-0265	Soil	September 12, 2016 11:40 am	09/13/2016

Polychlorinated Biphenyls (PCB)

Log-in Notes: **Sample Notes:**

Sample Prepared by Method: EPA 3550C

CAS No.	Parameter	Result	Flag	Units	LOD/MDL	Reported to LOQ	Dilution	Reference Method	Date/Time Prepared	Date/Time Analyzed	Analyst
11096-82-5	Aroclor 1260	ND		mg/kg dry	0.0189	0.0189	1	EPA 8082A Certifications: NELAC-NY10854,CTDOH,NJDEP,PADEP	09/20/2016 07:11	09/20/2016 13:25	AMC
1336-36-3	*** Total PCBs**	**0.0393**		mg/kg dry	0.0189	0.0189	1	EPA 8082A Certifications:	09/20/2016 07:11	09/20/2016 13:25	AMC

	Surrogate Recoveries	Result	Acceptance Range
877-09-8	*Surrogate: Tetrachloro-m-xylene*	*105 %*	*30-140*
2051-24-3	*Surrogate: Decachlorobiphenyl*	*110 %*	*30-140*

Total Petroleum Hydrocarbons-DRO (C10-C28)

Log-in Notes: **Sample Notes:**

Sample Prepared by Method: EPA 3550C

CAS No.	Parameter	Result	Flag	Units	LOD/MDL	Reported to LOQ	Dilution	Reference Method	Date/Time Prepared	Date/Time Analyzed	Analyst
	Total Petroleum Hydrocarbons-DRO	**46.5**		mg/kg dry	3.85	11.3	1	EPA 8015D Certifications: NELAC-NY10854,NJDEP,PADEP	09/19/2016 12:01	09/19/2016 17:56	AMC

	Surrogate Recoveries	Result	Acceptance Range
638-68-6	*Surrogate: Triacontane*	*79.3 %*	*30-150*

Total Petroleum Hydrocarbons-GRO (C5-C10)

Log-in Notes: **Sample Notes:** VOA-CONT

Sample Prepared by Method: EPA 5035A

CAS No.	Parameter	Result	Flag	Units	LOD/MDL	Reported to LOQ	Dilution	Reference Method	Date/Time Prepared	Date/Time Analyzed	Analyst
	Total Petroleum Hydrocarbons-GRO	ND		mg/kg dry	45.3	90.6	100	EPA 8015D Certifications: NELAC-NY10854,NJDEP,PADEP	09/19/2016 15:46	09/20/2016 00:13	OW

	Surrogate Recoveries	Result	Acceptance Range
460-00-4	*Surrogate: p-Bromofluorobenzene*	*102 %*	*70-130*

Metals, TCLP RCRA

Log-in Notes: **Sample Notes:**

Sample Prepared by Method: EPA 3015A/1311

CAS No.	Parameter	Result	Flag	Units	LOD/MDL	Reported to LOQ	Dilution	Reference Method	Date/Time Prepared	Date/Time Analyzed	Analyst
7440-38-2	Arsenic	ND		mg/L	0.004	0.004	1	EPA 6010C/1311 Certifications: CTDOH,NELAC-NY10854,NJDEP,PADEP	09/15/2016 11:37	09/16/2016 01:35	KV
7440-39-3	**Barium**	**0.230**		mg/L	0.011	0.011	1	EPA 6010C/1311 Certifications: CTDOH,NELAC-NY10854,NJDEP,PADEP	09/15/2016 11:37	09/16/2016 01:35	KV
7440-43-9	Cadmium	ND		mg/L	0.003	0.003	1	EPA 6010C/1311 Certifications: CTDOH,NELAC-NY10854,NJDEP,PADEP	09/15/2016 11:37	09/16/2016 01:35	KV
7440-47-3	Chromium	ND		mg/L	0.006	0.006	1	EPA 6010C/1311 Certifications: CTDOH,NELAC-NY10854,NJDEP,PADEP	09/15/2016 11:37	09/16/2016 01:35	KV
7439-92-1	**Lead**	**0.073**		mg/L	0.003	0.003	1	EPA 6010C/1311 Certifications: CTDOH,NELAC-NY10854,NJDEP,PADEP	09/15/2016 11:37	09/16/2016 01:35	KV
7782-49-2	Selenium	ND	M-SeTC	mg/L	0.011	0.011	1	EPA 6010C/1311 Certifications: CTDOH,NELAC-NY10854,NJDEP,PADEP	09/15/2016 11:37	09/16/2016 01:35	KV

Sample Information

Client Sample ID: SB-06-Comp

York Sample ID: 16I0414-02

York Project (SDG) No.	Client Project ID	Matrix	Collection Date/Time	Date Received
16I0414	BEGS-Flatbush Ave Waterman Phase II 15-008-0265	Soil	September 12, 2016 11:40 am	09/13/2016

Metals, TCLP RCRA

Log-in Notes: **Sample Notes:**

Sample Prepared by Method: EPA 3015A/1311

CAS No.	Parameter	Result	Flag	Units	LOD/MDL	Reported to LOQ	Dilution	Reference Method	Date/Time Prepared	Date/Time Analyzed	Analyst
7440-22-4	Silver	ND		mg/L	0.006	0.006	1	EPA 6010C/1311	09/15/2016 11:37	09/16/2016 01:35	KV
								Certifications: CTDOH,NELAC-NY10854,NJDEP,PADEP			

Mercury TCLP by 7473

Log-in Notes: **Sample Notes:**

Sample Prepared by Method: EPA 7473 water

CAS No.	Parameter	Result	Flag	Units	LOD/MDL	Reported to LOQ	Dilution	Reference Method	Date/Time Prepared	Date/Time Analyzed	Analyst
7439-97-6	Mercury	ND		mg/L	0.0000390	0.000200	1	EPA 7473/1311	09/16/2016 06:16	09/16/2016 14:16	ALD
								Certifications: CTDOH,NJDEP,PADEP,NELAC-NY10854			

Ignitability

Log-in Notes: **Sample Notes:**

Sample Prepared by Method: Analysis Preparation

CAS No.	Parameter	Result	Flag	Units	LOD/MDL	Reported to LOQ	Dilution	Reference Method	Date/Time Prepared	Date/Time Analyzed	Analyst
	* Ignitability	Non-Ignit.		-	1	1	1	EPA 1030P	09/14/2016 18:37	09/15/2016 03:12	AA
								Certifications: CTDOH,PADEP			

Total Solids

Log-in Notes: **Sample Notes:**

Sample Prepared by Method: % Solids Prep

CAS No.	Parameter	Result	Flag	Units	LOD/MDL	Reported to LOQ	Dilution	Reference Method	Date/Time Prepared	Date/Time Analyzed	Analyst
solids	*** % Solids**	**88.3**		%	0.100	0.100	1	SM 2540G	09/19/2016 07:35	09/19/2016 14:01	LAB
								Certifications: CTDOH			

Corrosivity

Log-in Notes: **Sample Notes:**

Sample Prepared by Method: Analysis Preparation

CAS No.	Parameter	Result	Flag	Units	LOD/MDL	Reported to LOQ	Dilution	Reference Method	Date/Time Prepared	Date/Time Analyzed	Analyst
	pH	**7.30**	HT-pH	pH units		0.500	1	EPA 9045D	09/20/2016 14:13	09/20/2016 16:22	DM1
								Certifications: NELAC-NY10854,CTDOH,PADEP			

Reactivity-Cyanide

Log-in Notes: **Sample Notes:**

Sample Prepared by Method: Analysis Preparation

CAS No.	Parameter	Result	Flag	Units	LOD/MDL	Reported to LOQ	Dilution	Reference Method	Date/Time Prepared	Date/Time Analyzed	Analyst
	* Reactivity - Cyanide	ND		mg/kg	0.250	0.250	1	EPA SW-846 Ch.7.3.3	09/20/2016 10:46	09/20/2016 14:00	AD
								Certifications: CTDOH,PADEP			

Reactivity-Sulfide

Log-in Notes: **Sample Notes:**

Sample Prepared by Method: Analysis Preparation

CAS No.	Parameter	Result	Flag	Units	LOD/MDL	Reported to LOQ	Dilution	Reference Method	Date/Time Prepared	Date/Time Analyzed	Analyst
	*** Reactivity - Sulfide**	**32.0**		mg/kg	15.0	15.0	1	EPA SW-846 Ch.7.3.4	09/20/2016 10:47	09/20/2016 14:02	AD
								Certifications: CTDOH,PADEP			

Sample Information

Client Sample ID: SB-06-Comp **York Sample ID:** 16I0414-02

York Project (SDG) No.	Client Project ID	Matrix	Collection Date/Time	Date Received
16I0414	BEGS-Flatbush Ave Waterman Phase II 15-008-0265	Soil	September 12, 2016 11:40 am	09/13/2016

TCLP Extraction for METALS EPA 1311 **Log-in Notes:** **Sample Notes:**

Sample Prepared by Method: EPA SW 846-1311 TCLP ext. for metals

CAS No.	Parameter	Result	Flag	Units	LOD/MDL	Reported to LOQ	Dilution	Reference Method	Date/Time Prepared	Date/Time Analyzed	Analyst
	TCLP Extraction	Completed		N/A	1.00	1.00	1	EPA 1311	09/14/2016 19:15	09/15/2016 12:18	TJM
								Certifications: NELAC-NY10854,CTDOH,NJDEP,PADEP			

Sample Information

Client Sample ID: SB-07-14.5-15.0' **York Sample ID:** 16I0414-03

York Project (SDG) No.	Client Project ID	Matrix	Collection Date/Time	Date Received
16I0414	BEGS-Flatbush Ave Waterman Phase II 15-008-0265	Soil	September 12, 2016 1:00 pm	09/13/2016

Volatile Organics, 8260 - Comprehensive **Log-in Notes:** VOA-CONT **Sample Notes:** VOA-CONT

Sample Prepared by Method: EPA 5035A

CAS No.	Parameter	Result	Flag	Units	Reported to LOD/MDL	LOQ	Dilution	Reference Method	Date/Time Prepared	Date/Time Analyzed	Analyst
630-20-6	1,1,1,2-Tetrachloroethane	ND		mg/kg dry	0.0026	0.0051	1	EPA 8260C	09/19/2016 08:18	09/19/2016 17:42	SS
								Certifications: CTDOH,NELAC-NY10854,NJDEP			
71-55-6	1,1,1-Trichloroethane	ND		mg/kg dry	0.0026	0.0051	1	EPA 8260C	09/19/2016 08:18	09/19/2016 17:42	SS
								Certifications: CTDOH,NELAC-NY10854,NJDEP,PADEP			
79-34-5	1,1,2,2-Tetrachloroethane	ND		mg/kg dry	0.0026	0.0051	1	EPA 8260C	09/19/2016 08:18	09/19/2016 17:42	SS
								Certifications: CTDOH,NELAC-NY10854,NJDEP,PADEP			
76-13-1	1,1,2-Trichloro-1,2,2-trifluoroethane (Freon 113)	ND		mg/kg dry	0.0026	0.0051	1	EPA 8260C	09/19/2016 08:18	09/19/2016 17:42	SS
								Certifications: CTDOH,NELAC-NY10854,NJDEP			
79-00-5	1,1,2-Trichloroethane	ND		mg/kg dry	0.0026	0.0051	1	EPA 8260C	09/19/2016 08:18	09/19/2016 17:42	SS
								Certifications: CTDOH,NELAC-NY10854,NJDEP,PADEP			
75-34-3	1,1-Dichloroethane	ND		mg/kg dry	0.0026	0.0051	1	EPA 8260C	09/19/2016 08:18	09/19/2016 17:42	SS
								Certifications: CTDOH,NELAC-NY10854,NJDEP,PADEP			
75-35-4	1,1-Dichloroethylene	ND		mg/kg dry	0.0026	0.0051	1	EPA 8260C	09/19/2016 08:18	09/19/2016 17:42	SS
								Certifications: CTDOH,NELAC-NY10854,NJDEP,PADEP			
87-61-6	1,2,3-Trichlorobenzene	ND		mg/kg dry	0.0026	0.0051	1	EPA 8260C	09/19/2016 08:18	09/19/2016 17:42	SS
								Certifications: NELAC-NY10854,NJDEP			
96-18-4	1,2,3-Trichloropropane	ND		mg/kg dry	0.0026	0.0051	1	EPA 8260C	09/19/2016 08:18	09/19/2016 17:42	SS
								Certifications: NELAC-NY10854,NJDEP			
120-82-1	1,2,4-Trichlorobenzene	ND		mg/kg dry	0.0026	0.0051	1	EPA 8260C	09/19/2016 08:18	09/19/2016 17:42	SS
								Certifications: NELAC-NY10854,NJDEP			
95-63-6	1,2,4-Trimethylbenzene	ND		mg/kg dry	0.0026	0.0051	1	EPA 8260C	09/19/2016 08:18	09/19/2016 17:42	SS
								Certifications: CTDOH,NELAC-NY10854,NJDEP			
96-12-8	1,2-Dibromo-3-chloropropane	ND		mg/kg dry	0.0026	0.0051	1	EPA 8260C	09/19/2016 08:18	09/19/2016 17:42	SS
								Certifications: CTDOH,NELAC-NY10854,NJDEP			
106-93-4	1,2-Dibromoethane	ND		mg/kg dry	0.0026	0.0051	1	EPA 8260C	09/19/2016 08:18	09/19/2016 17:42	SS
								Certifications: CTDOH,NELAC-NY10854,NJDEP			
95-50-1	1,2-Dichlorobenzene	ND		mg/kg dry	0.0026	0.0051	1	EPA 8260C	09/19/2016 08:18	09/19/2016 17:42	SS
								Certifications: CTDOH,NELAC-NY10854,NJDEP,PADEP			

Sample Information

Client Sample ID: SB-07-14.5-15.0' **York Sample ID:** 16I0414-03

York Project (SDG) No.	Client Project ID	Matrix	Collection Date/Time	Date Received
16I0414	BEGS-Flatbush Ave Waterman Phase II 15-008-0265	Soil	September 12, 2016 1:00 pm	09/13/2016

Volatile Organics, 8260 - Comprehensive **Log-in Notes:** VOA-CONT **Sample Notes:** VOA-CONT

Sample Prepared by Method: EPA 5035A

CAS No.	Parameter	Result	Flag	Units	Reported to LOD/MDL	LOQ	Dilution	Reference Method	Date/Time Prepared	Date/Time Analyzed	Analyst
107-06-2	1,2-Dichloroethane	ND		mg/kg dry	0.0026	0.0051	1	EPA 8260C Certifications: CTDOH,NELAC-NY10854,NJDEP,PADEP	09/19/2016 08:18	09/19/2016 17:42	SS
78-87-5	1,2-Dichloropropane	ND		mg/kg dry	0.0026	0.0051	1	EPA 8260C Certifications: CTDOH,NELAC-NY10854,NJDEP	09/19/2016 08:18	09/19/2016 17:42	SS
108-67-8	1,3,5-Trimethylbenzene	ND		mg/kg dry	0.0026	0.0051	1	EPA 8260C Certifications: CTDOH,NELAC-NY10854,NJDEP	09/19/2016 08:18	09/19/2016 17:42	SS
541-73-1	1,3-Dichlorobenzene	ND		mg/kg dry	0.0026	0.0051	1	EPA 8260C Certifications: CTDOH,NELAC-NY10854,NJDEP,PADEP	09/19/2016 08:18	09/19/2016 17:42	SS
106-46-7	1,4-Dichlorobenzene	ND		mg/kg dry	0.0026	0.0051	1	EPA 8260C Certifications: CTDOH,NELAC-NY10854,NJDEP,PADEP	09/19/2016 08:18	09/19/2016 17:42	SS
123-91-1	1,4-Dioxane	ND		mg/kg dry	0.051	0.10	1	EPA 8260C Certifications: NELAC-NY10854,NJDEP	09/19/2016 08:18	09/19/2016 17:42	SS
78-93-3	2-Butanone	ND		mg/kg dry	0.0026	0.0051	1	EPA 8260C Certifications: CTDOH,NELAC-NY10854,NJDEP	09/19/2016 08:18	09/19/2016 17:42	SS
[illegible]78-6	2-Hexanone	ND		mg/kg dry	0.0026	0.0051	1	EPA 8260C Certifications: CTDOH,NELAC-NY10854,NJDEP	09/19/2016 08:18	09/19/2016 17:42	SS
108-10-1	4-Methyl-2-pentanone	ND		mg/kg dry	0.0026	0.0051	1	EPA 8260C Certifications: CTDOH,NELAC-NY10854,NJDEP	09/19/2016 08:18	09/19/2016 17:42	SS
67-64-1	**Acetone**	**0.0058**	J, B	mg/kg dry	0.0051	0.010	1	EPA 8260C Certifications: CTDOH,NELAC-NY10854,NJDEP	09/19/2016 08:18	09/19/2016 17:42	SS
107-02-8	Acrolein	ND		mg/kg dry	0.0051	0.010	1	EPA 8260C Certifications: CTDOH,NELAC-NY10854,NJDEP	09/19/2016 08:18	09/19/2016 17:42	SS
107-13-1	Acrylonitrile	ND		mg/kg dry	0.0026	0.0051	1	EPA 8260C Certifications: CTDOH,NELAC-NY10854,NJDEP	09/19/2016 08:18	09/19/2016 17:42	SS
71-43-2	Benzene	ND		mg/kg dry	0.0026	0.0051	1	EPA 8260C Certifications: CTDOH,NELAC-NY10854,NJDEP,PADEP	09/19/2016 08:18	09/19/2016 17:42	SS
74-97-5	Bromochloromethane	ND		mg/kg dry	0.0026	0.0051	1	EPA 8260C Certifications: NELAC-NY10854,NJDEP	09/19/2016 08:18	09/19/2016 17:42	SS
75-27-4	Bromodichloromethane	ND		mg/kg dry	0.0026	0.0051	1	EPA 8260C Certifications: CTDOH,NELAC-NY10854,NJDEP,PADEP	09/19/2016 08:18	09/19/2016 17:42	SS
75-25-2	Bromoform	ND		mg/kg dry	0.0026	0.0051	1	EPA 8260C Certifications: CTDOH,NELAC-NY10854,NJDEP,PADEP	09/19/2016 08:18	09/19/2016 17:42	SS
74-83-9	Bromomethane	ND		mg/kg dry	0.0026	0.0051	1	EPA 8260C Certifications: CTDOH,NELAC-NY10854,NJDEP,PADEP	09/19/2016 08:18	09/19/2016 17:42	SS
75-15-0	Carbon disulfide	ND		mg/kg dry	0.0026	0.0051	1	EPA 8260C Certifications: CTDOH,NELAC-NY10854,NJDEP	09/19/2016 08:18	09/19/2016 17:42	SS
56-23-5	Carbon tetrachloride	ND		mg/kg dry	0.0026	0.0051	1	EPA 8260C Certifications: CTDOH,NELAC-NY10854,NJDEP,PADEP	09/19/2016 08:18	09/19/2016 17:42	SS
108-90-7	Chlorobenzene	ND		mg/kg dry	0.0026	0.0051	1	EPA 8260C Certifications: CTDOH,NELAC-NY10854,NJDEP,PADEP	09/19/2016 08:18	09/19/2016 17:42	SS
75-00-3	Chloroethane	ND		mg/kg dry	0.0026	0.0051	1	EPA 8260C Certifications: CTDOH,NELAC-NY10854,NJDEP,PADEP	09/19/2016 08:18	09/19/2016 17:42	SS
[illegible]-3	Chloroform	ND		mg/kg dry	0.0026	0.0051	1	EPA 8260C Certifications: CTDOH,NELAC-NY10854,NJDEP,PADEP	09/19/2016 08:18	09/19/2016 17:42	SS

Sample Information

Client Sample ID: SB-07-14.5-15.0' **York Sample ID:** 16I0414-03

York Project (SDG) No.	Client Project ID	Matrix	Collection Date/Time	Date Received
16I0414	BEGS-Flatbush Ave Waterman Phase II 15-008-0265	Soil	September 12, 2016 1:00 pm	09/13/2016

Volatile Organics, 8260 - Comprehensive

Log-in Notes: VOA-CONT **Sample Notes:** VOA-CONT

Sample Prepared by Method: EPA 5035A

CAS No.	Parameter	Result	Flag	Units	Reported to LOD/MDL	LOQ	Dilution	Reference Method	Date/Time Prepared	Date/Time Analyzed	Analyst
74-87-3	Chloromethane	ND		mg/kg dry	0.0026	0.0051	1	EPA 8260C Certifications: CTDOH,NELAC-NY10854,NJDEP,PADEP	09/19/2016 08:18	09/19/2016 17:42	SS
156-59-2	cis-1,2-Dichloroethylene	ND		mg/kg dry	0.0026	0.0051	1	EPA 8260C Certifications: CTDOH,NELAC-NY10854,NJDEP	09/19/2016 08:18	09/19/2016 17:42	SS
10061-01-5	cis-1,3-Dichloropropylene	ND		mg/kg dry	0.0026	0.0051	1	EPA 8260C Certifications: CTDOH,NELAC-NY10854,NJDEP,PADEP	09/19/2016 08:18	09/19/2016 17:42	SS
110-82-7	Cyclohexane	ND		mg/kg dry	0.0026	0.0051	1	EPA 8260C Certifications: NELAC-NY10854,NJDEP	09/19/2016 08:18	09/19/2016 17:42	SS
124-48-1	Dibromochloromethane	ND		mg/kg dry	0.0026	0.0051	1	EPA 8260C Certifications: NELAC-NY10854,NJDEP,PADEP	09/19/2016 08:18	09/19/2016 17:42	SS
74-95-3	Dibromomethane	ND		mg/kg dry	0.0026	0.0051	1	EPA 8260C Certifications: NELAC-NY10854,NJDEP	09/19/2016 08:18	09/19/2016 17:42	SS
75-71-8	Dichlorodifluoromethane	ND		mg/kg dry	0.0026	0.0051	1	EPA 8260C Certifications: NELAC-NY10854,NJDEP	09/19/2016 08:18	09/19/2016 17:42	SS
100-41-4	Ethyl Benzene	ND		mg/kg dry	0.0026	0.0051	1	EPA 8260C Certifications: CTDOH,NELAC-NY10854,NJDEP,PADEP	09/19/2016 08:18	09/19/2016 17:42	SS
87-68-3	Hexachlorobutadiene	ND		mg/kg dry	0.0026	0.0051	1	EPA 8260C Certifications: NELAC-NY10854,NJDEP	09/19/2016 08:18	09/19/2016 17:42	SS
98-82-8	Isopropylbenzene	ND		mg/kg dry	0.0026	0.0051	1	EPA 8260C Certifications: CTDOH,NELAC-NY10854,NJDEP	09/19/2016 08:18	09/19/2016 17:42	SS
79-20-9	Methyl acetate	ND		mg/kg dry	0.0026	0.0051	1	EPA 8260C Certifications: NELAC-NY10854,NJDEP	09/19/2016 08:18	09/19/2016 17:42	SS
1634-04-4	Methyl tert-butyl ether (MTBE)	ND		mg/kg dry	0.0026	0.0051	1	EPA 8260C Certifications: CTDOH,NELAC-NY10854,NJDEP	09/19/2016 08:18	09/19/2016 17:42	SS
108-87-2	Methylcyclohexane	ND		mg/kg dry	0.0026	0.0051	1	EPA 8260C Certifications: NELAC-NY10854,NJDEP	09/19/2016 08:18	09/19/2016 17:42	SS
75-09-2	**Methylene chloride**	**0.0070**	J	mg/kg dry	0.0051	0.010	1	EPA 8260C Certifications: CTDOH,NELAC-NY10854,NJDEP,PADEP	09/19/2016 08:18	09/19/2016 17:42	SS
104-51-8	n-Butylbenzene	ND		mg/kg dry	0.0026	0.0051	1	EPA 8260C Certifications: CTDOH,NELAC-NY10854,NJDEP	09/19/2016 08:18	09/19/2016 17:42	SS
103-65-1	n-Propylbenzene	ND		mg/kg dry	0.0026	0.0051	1	EPA 8260C Certifications: CTDOH,NELAC-NY10854,NJDEP	09/19/2016 08:18	09/19/2016 17:42	SS
95-47-6	o-Xylene	ND		mg/kg dry	0.0026	0.0051	1	EPA 8260C Certifications: CTDOH,NELAC-NY10854	09/19/2016 08:18	09/19/2016 17:42	SS
179601-23-1	p- & m- Xylenes	ND		mg/kg dry	0.0051	0.010	1	EPA 8260C Certifications: CTDOH,NELAC-NY10854	09/19/2016 08:18	09/19/2016 17:42	SS
99-87-6	p-Isopropyltoluene	ND		mg/kg dry	0.0026	0.0051	1	EPA 8260C Certifications: CTDOH,NELAC-NY10854,NJDEP	09/19/2016 08:18	09/19/2016 17:42	SS
135-98-8	sec-Butylbenzene	ND		mg/kg dry	0.0026	0.0051	1	EPA 8260C Certifications: CTDOH,NELAC-NY10854,NJDEP	09/19/2016 08:18	09/19/2016 17:42	SS
100-42-5	Styrene	ND		mg/kg dry	0.0026	0.0051	1	EPA 8260C Certifications: CTDOH,NELAC-NY10854,NJDEP	09/19/2016 08:18	09/19/2016 17:42	SS
75-65-0	tert-Butyl alcohol (TBA)	ND		mg/kg dry	0.0026	0.0051	1	EPA 8260C Certifications: NELAC-NY10854,NJDEP	09/19/2016 08:18	09/19/2016 17:42	SS

Sample Information

Client Sample ID: SB-07-14.5-15.0'

York Sample ID: 16I0414-03

York Project (SDG) No.	Client Project ID	Matrix	Collection Date/Time	Date Received
16I0414	BEGS-Flatbush Ave Waterman Phase II 15-008-0265	Soil	September 12, 2016 1:00 pm	09/13/2016

Volatile Organics, 8260 - Comprehensive

Log-in Notes: VOA-CONT **Sample Notes:** VOA-CONT

Sample Prepared by Method: EPA 5035A

CAS No.	Parameter	Result	Flag	Units	Reported to LOD/MDL	LOQ	Dilution	Reference Method	Date/Time Prepared	Date/Time Analyzed	Analyst
98-06-6	tert-Butylbenzene	ND		mg/kg dry	0.0026	0.0051	1	EPA 8260C Certifications: CTDOH,NELAC-NY10854,NJDEP	09/19/2016 08:18	09/19/2016 17:42	SS
127-18-4	Tetrachloroethylene	ND		mg/kg dry	0.0026	0.0051	1	EPA 8260C Certifications: CTDOH,NELAC-NY10854,NJDEP,PADEP	09/19/2016 08:18	09/19/2016 17:42	SS
108-88-3	Toluene	ND		mg/kg dry	0.0026	0.0051	1	EPA 8260C Certifications: CTDOH,NELAC-NY10854,NJDEP,PADEP	09/19/2016 08:18	09/19/2016 17:42	SS
156-60-5	trans-1,2-Dichloroethylene	ND		mg/kg dry	0.0026	0.0051	1	EPA 8260C Certifications: CTDOH,NELAC-NY10854,NJDEP	09/19/2016 08:18	09/19/2016 17:42	SS
10061-02-6	trans-1,3-Dichloropropylene	ND		mg/kg dry	0.0026	0.0051	1	EPA 8260C Certifications: CTDOH,NELAC-NY10854,NJDEP,PADEP	09/19/2016 08:18	09/19/2016 17:42	SS
79-01-6	Trichloroethylene	ND		mg/kg dry	0.0026	0.0051	1	EPA 8260C Certifications: CTDOH,NELAC-NY10854,NJDEP,PADEP	09/19/2016 08:18	09/19/2016 17:42	SS
75-69-4	Trichlorofluoromethane	ND		mg/kg dry	0.0026	0.0051	1	EPA 8260C Certifications: CTDOH,NELAC-NY10854,NJDEP,PADEP	09/19/2016 08:18	09/19/2016 17:42	SS
[illegible]4	Vinyl Chloride	ND		mg/kg dry	0.0026	0.0051	1	EPA 8260C Certifications: CTDOH,NELAC-NY10854,NJDEP,PADEP	09/19/2016 08:18	09/19/2016 17:42	SS
1330-20-7	Xylenes, Total	ND		mg/kg dry	0.0077	0.015	1	EPA 8260C Certifications: CTDOH,NELAC-NY10854,NJDEP,PADEP	09/19/2016 08:18	09/19/2016 17:42	SS

	Surrogate Recoveries	Result	Acceptance Range
17060-07-0	*Surrogate: 1,2-Dichloroethane-d4*	*107 %*	*77-125*
2037-26-5	*Surrogate: Toluene-d8*	*97.3 %*	*85-120*
460-00-4	*Surrogate: p-Bromofluorobenzene*	*95.1 %*	*76-130*

Total Solids

Log-in Notes: VOA-CONT **Sample Notes:**

Sample Prepared by Method: % Solids Prep

CAS No.	Parameter	Result	Flag	Units	LOD/MDL	Reported to LOQ	Dilution	Reference Method	Date/Time Prepared	Date/Time Analyzed	Analyst
solids	* % Solids	97.7		%	0.100	0.100	1	SM 2540G Certifications: CTDOH	09/19/2016 14:18	09/20/2016 08:04	LAB

Sample Information

Client Sample ID: SB-07-Comp

York Sample ID: 16I0414-04

York Project (SDG) No.	Client Project ID	Matrix	Collection Date/Time	Date Received
16I0414	BEGS-Flatbush Ave Waterman Phase II 15-008-0265	Soil	September 12, 2016 1:10 pm	09/13/2016

[illegible]mi-Volatiles, PAH Target List

Log-in Notes: **Sample Notes:**

[illegible] Prepared by Method: EPA 3550C

CAS No.	Parameter	Result	Flag	Units	Reported to LOD/MDL	LOQ	Dilution	Reference Method	Date/Time Prepared	Date/Time Analyzed	Analyst

Sample Information

Client Sample ID: SB-07-Comp

York Sample ID: 16I0414-04

York Project (SDG) No.	Client Project ID	Matrix	Collection Date/Time	Date Received
16I0414	BEGS-Flatbush Ave Waterman Phase II 15-008-0265	Soil	September 12, 2016 1:10 pm	09/13/2016

Semi-Volatiles, PAH Target List

Log-in Notes:

Sample Notes:

Sample Prepared by Method: EPA 3550C

CAS No.	Parameter	Result	Flag	Units	Reported to LOD/MDL	LOQ	Dilution	Reference Method	Date/Time Prepared	Date/Time Analyzed	Analyst
91-57-6	2-Methylnaphthalene	ND		mg/kg dry	0.0455	0.0908	2	EPA 8270D Certifications: CTDOH,NELAC-NY10854,NJDEP,PADEP	09/19/2016 11:58	09/20/2016 10:37	SR
83-32-9	Acenaphthene	ND		mg/kg dry	0.0455	0.0908	2	EPA 8270D Certifications: CTDOH,NELAC-NY10854,NJDEP,PADEP	09/19/2016 11:58	09/20/2016 10:37	SR
208-96-8	Acenaphthylene	ND		mg/kg dry	0.0455	0.0908	2	EPA 8270D Certifications: CTDOH,NELAC-NY10854,NJDEP,PADEP	09/19/2016 11:58	09/20/2016 10:37	SR
120-12-7	Anthracene	ND		mg/kg dry	0.0455	0.0908	2	EPA 8270D Certifications: CTDOH,NELAC-NY10854,NJDEP,PADEP	09/19/2016 11:58	09/20/2016 10:37	SR
56-55-3	Benzo(a)anthracene	ND		mg/kg dry	0.0455	0.0908	2	EPA 8270D Certifications: CTDOH,NELAC-NY10854,NJDEP,PADEP	09/19/2016 11:58	09/20/2016 10:37	SR
50-32-8	Benzo(a)pyrene	ND		mg/kg dry	0.0455	0.0908	2	EPA 8270D Certifications: CTDOH,NELAC-NY10854,NJDEP,PADEP	09/19/2016 11:58	09/20/2016 10:37	SR
205-99-2	Benzo(b)fluoranthene	ND		mg/kg dry	0.0455	0.0908	2	EPA 8270D Certifications: CTDOH,NELAC-NY10854,NJDEP,PADEP	09/19/2016 11:58	09/20/2016 10:37	SR
191-24-2	Benzo(g,h,i)perylene	ND		mg/kg dry	0.0455	0.0908	2	EPA 8270D Certifications: CTDOH,NELAC-NY10854,NJDEP,PADEP	09/19/2016 11:58	09/20/2016 10:37	SR
207-08-9	Benzo(k)fluoranthene	ND		mg/kg dry	0.0455	0.0908	2	EPA 8270D Certifications: CTDOH,NELAC-NY10854,NJDEP,PADEP	09/19/2016 11:58	09/20/2016 10:37	SR
218-01-9	Chrysene	ND		mg/kg dry	0.0455	0.0908	2	EPA 8270D Certifications: CTDOH,NELAC-NY10854,NJDEP,PADEP	09/19/2016 11:58	09/20/2016 10:37	SR
53-70-3	Dibenzo(a,h)anthracene	ND		mg/kg dry	0.0455	0.0908	2	EPA 8270D Certifications: CTDOH,NELAC-NY10854,NJDEP,PADEP	09/19/2016 11:58	09/20/2016 10:37	SR
206-44-0	Fluoranthene	ND		mg/kg dry	0.0455	0.0908	2	EPA 8270D Certifications: CTDOH,NELAC-NY10854,NJDEP,PADEP	09/19/2016 11:58	09/20/2016 10:37	SR
86-73-7	Fluorene	ND		mg/kg dry	0.0455	0.0908	2	EPA 8270D Certifications: NELAC-NY10854,NJDEP,PADEP	09/19/2016 11:58	09/20/2016 10:37	SR
193-39-5	Indeno(1,2,3-cd)pyrene	ND		mg/kg dry	0.0455	0.0908	2	EPA 8270D Certifications: CTDOH,NELAC-NY10854,NJDEP,PADEP	09/19/2016 11:58	09/20/2016 10:37	SR
91-20-3	Naphthalene	ND		mg/kg dry	0.0455	0.0908	2	EPA 8270D Certifications: CTDOH,NELAC-NY10854,NJDEP,PADEP	09/19/2016 11:58	09/20/2016 10:37	SR
85-01-8	Phenanthrene	ND		mg/kg dry	0.0455	0.0908	2	EPA 8270D Certifications: CTDOH,NELAC-NY10854,NJDEP,PADEP	09/19/2016 11:58	09/20/2016 10:37	SR
129-00-0	Pyrene	ND		mg/kg dry	0.0455	0.0908	2	EPA 8270D Certifications: CTDOH,NELAC-NY10854,NJDEP,PADEP	09/19/2016 11:58	09/20/2016 10:37	SR

	Surrogate Recoveries	Result	Acceptance Range
4165-60-0	*Surrogate: Nitrobenzene-d5*	*24.9 %*	*22-108*
321-60-8	*Surrogate: 2-Fluorobiphenyl*	*28.8 %*	*21-113*
1718-51-0	*Surrogate: Terphenyl-d14*	*40.1 %*	*24-116*

Polychlorinated Biphenyls (PCB)

Log-in Notes:

Sample Notes:

Sample Information

Client Sample ID: SB-07-Comp

York Sample ID: 16I0414-04

York Project (SDG) No.	Client Project ID	Matrix	Collection Date/Time	Date Received
16I0414	BEGS-Flatbush Ave Waterman Phase II 15-008-0265	Soil	September 12, 2016 1:10 pm	09/13/2016

Sample Prepared by Method: EPA 3550C

CAS No.	Parameter	Result	Flag	Units	LOD/MDL	Reported to LOQ	Dilution	Reference Method	Date/Time Prepared	Date/Time Analyzed	Analyst
12674-11-2	Aroclor 1016	ND		mg/kg dry	0.0181	0.0181	1	EPA 8082A Certifications: NELAC-NY10854,CTDOH,NJDEP,PADEP	09/20/2016 07:11	09/20/2016 13:39	AMC
11104-28-2	Aroclor 1221	ND		mg/kg dry	0.0181	0.0181	1	EPA 8082A Certifications: NELAC-NY10854,CTDOH,NJDEP,PADEP	09/20/2016 07:11	09/20/2016 13:39	AMC
11141-16-5	Aroclor 1232	ND		mg/kg dry	0.0181	0.0181	1	EPA 8082A Certifications: NELAC-NY10854,CTDOH,NJDEP,PADEP	09/20/2016 07:11	09/20/2016 13:39	AMC
53469-21-9	Aroclor 1242	ND		mg/kg dry	0.0181	0.0181	1	EPA 8082A Certifications: NELAC-NY10854,CTDOH,NJDEP,PADEP	09/20/2016 07:11	09/20/2016 13:39	AMC
12672-29-6	Aroclor 1248	ND		mg/kg dry	0.0181	0.0181	1	EPA 8082A Certifications: NELAC-NY10854,CTDOH,NJDEP,PADEP	09/20/2016 07:11	09/20/2016 13:39	AMC
11097-69-1	Aroclor 1254	ND		mg/kg dry	0.0181	0.0181	1	EPA 8082A Certifications: NELAC-NY10854,CTDOH,NJDEP,PADEP	09/20/2016 07:11	09/20/2016 13:39	AMC
11096-82-5	Aroclor 1260	ND		mg/kg dry	0.0181	0.0181	1	EPA 8082A Certifications: NELAC-NY10854,CTDOH,NJDEP,PADEP	09/20/2016 07:11	09/20/2016 13:39	AMC
[illegible]36-36-3	* Total PCBs	ND		mg/kg dry	0.0181	0.0181	1	EPA 8082A Certifications:	09/20/2016 07:11	09/20/2016 13:39	AMC

	Surrogate Recoveries	Result	Acceptance Range
877-09-8	*Surrogate: Tetrachloro-m-xylene*	*97.0 %*	*30-140*
2051-24-3	*Surrogate: Decachlorobiphenyl*	*101 %*	*30-140*

Total Petroleum Hydrocarbons-DRO (C10-C28)

Log-in Notes:

Sample Notes:

Sample Prepared by Method: EPA 3550C

CAS No.	Parameter	Result	Flag	Units	LOD/MDL	Reported to LOQ	Dilution	Reference Method	Date/Time Prepared	Date/Time Analyzed	Analyst
	Total Petroleum Hydrocarbons-DRO	**44.8**		mg/kg dry	3.70	10.9	1	EPA 8015D Certifications: NELAC-NY10854,NJDEP,PADEP	09/19/2016 12:01	09/19/2016 18:27	AMC

	Surrogate Recoveries	Result	Acceptance Range
638-68-6	*Surrogate: Triacontane*	*75.0 %*	*30-150*

Total Petroleum Hydrocarbons-GRO (C5-C10)

Log-in Notes:

Sample Notes: VOA-CONT

Sample Prepared by Method: EPA 5035A

CAS No.	Parameter	Result	Flag	Units	LOD/MDL	Reported to LOQ	Dilution	Reference Method	Date/Time Prepared	Date/Time Analyzed	Analyst
	Total Petroleum Hydrocarbons-GRO	ND		mg/kg dry	43.5	87.1	100	EPA 8015D Certifications: NELAC-NY10854,NJDEP,PADEP	09/19/2016 15:46	09/20/2016 00:51	OW

	Surrogate Recoveries	Result	Acceptance Range
460-00-4	*Surrogate: p-Bromofluorobenzene*	*102 %*	*70-130*

Metals, TCLP RCRA

Log-in Notes:

Sample Notes:

Sample Prepared by Method: EPA 3015A/1311

CAS No.	Parameter	Result	Flag	Units	LOD/MDL	Reported to LOQ	Dilution	Reference Method	Date/Time Prepared	Date/Time Analyzed	Analyst

Sample Information

Client Sample ID: SB-07-Comp

York Sample ID: 16I0414-04

York Project (SDG) No.	Client Project ID	Matrix	Collection Date/Time	Date Received
16I0414	BEGS-Flatbush Ave Waterman Phase II 15-008-0265	Soil	September 12, 2016 1:10 pm	09/13/2016

Metals, TCLP RCRA

Log-in Notes:

Sample Notes:

Sample Prepared by Method: EPA 3015A/1311

CAS No.	Parameter	Result	Flag	Units	LOD/MDL	Reported to LOQ	Dilution	Reference Method	Date/Time Prepared	Date/Time Analyzed	Analyst
7440-38-2	Arsenic	ND		mg/L	0.004	0.004	1	EPA 6010C/1311	09/15/2016 11:37	09/16/2016 01:41	KV
								Certifications: CTDOH,NELAC-NY10854,NJDEP,PADEP			
7440-39-3	**Barium**	**0.221**		mg/L	0.011	0.011	1	EPA 6010C/1311	09/15/2016 11:37	09/16/2016 01:41	KV
								Certifications: CTDOH,NELAC-NY10854,NJDEP,PADEP			
7440-43-9	Cadmium	ND		mg/L	0.003	0.003	1	EPA 6010C/1311	09/15/2016 11:37	09/16/2016 01:41	KV
								Certifications: CTDOH,NELAC-NY10854,NJDEP,PADEP			
7440-47-3	Chromium	ND		mg/L	0.006	0.006	1	EPA 6010C/1311	09/15/2016 11:37	09/16/2016 01:41	KV
								Certifications: CTDOH,NELAC-NY10854,NJDEP,PADEP			
7439-92-1	**Lead**	**0.045**		mg/L	0.003	0.003	1	EPA 6010C/1311	09/15/2016 11:37	09/16/2016 01:41	KV
								Certifications: CTDOH,NELAC-NY10854,NJDEP,PADEP			
7782-49-2	Selenium	ND	M-SeTC	mg/L	0.011	0.011	1	EPA 6010C/1311	09/15/2016 11:37	09/16/2016 01:41	KV
								Certifications: CTDOH,NELAC-NY10854,NJDEP,PADEP			
7440-22-4	Silver	ND		mg/L	0.006	0.006	1	EPA 6010C/1311	09/15/2016 11:37	09/16/2016 01:41	KV
								Certifications: CTDOH,NELAC-NY10854,NJDEP,PADEP			

Mercury TCLP by 7473

Log-in Notes:

Sample Notes:

Sample Prepared by Method: EPA 7473 water

CAS No.	Parameter	Result	Flag	Units	LOD/MDL	Reported to LOQ	Dilution	Reference Method	Date/Time Prepared	Date/Time Analyzed	Analyst
7439-97-6	Mercury	ND		mg/L	0.0000390	0.000200	1	EPA 7473/1311	09/16/2016 06:16	09/16/2016 14:16	ALD
								Certifications: CTDOH,NJDEP,PADEP,NELAC-NY10854			

Ignitability

Log-in Notes:

Sample Notes:

Sample Prepared by Method: Analysis Preparation

CAS No.	Parameter	Result	Flag	Units	LOD/MDL	Reported to LOQ	Dilution	Reference Method	Date/Time Prepared	Date/Time Analyzed	Analyst
	* Ignitability	Non-Ignit.		-	1	1	1	EPA 1030P	09/14/2016 18:37	09/15/2016 03:12	AA
								Certifications: CTDOH,PADEP			

Total Solids

Log-in Notes:

Sample Notes:

Sample Prepared by Method: % Solids Prep

CAS No.	Parameter	Result	Flag	Units	LOD/MDL	Reported to LOQ	Dilution	Reference Method	Date/Time Prepared	Date/Time Analyzed	Analyst
solids	* % Solids	**91.9**		%	0.100	0.100	1	SM 2540G	09/19/2016 07:35	09/19/2016 14:01	LAB
								Certifications: CTDOH			

Corrosivity

Log-in Notes:

Sample Notes:

Sample Prepared by Method: Analysis Preparation

CAS No.	Parameter	Result	Flag	Units	LOD/MDL	Reported to LOQ	Dilution	Reference Method	Date/Time Prepared	Date/Time Analyzed	Analyst
	pH	**6.80**	HT-pH	pH units		0.500	1	EPA 9045D	09/20/2016 14:13	09/20/2016 16:22	DMT
								Certifications: NELAC-NY10854,CTDOH,PADEP			

Sample Information

Client Sample ID: SB-07-Comp **York Sample ID:** 16I0414-04

York Project (SDG) No.	Client Project ID	Matrix	Collection Date/Time	Date Received
16I0414	BEGS-Flatbush Ave Waterman Phase II 15-008-0265	Soil	September 12, 2016 1:10 pm	09/13/2016

Reactivity-Cyanide **Log-in Notes:** **Sample Notes:**

Sample Prepared by Method: Analysis Preparation

CAS No.	Parameter	Result	Flag	Units	LOD/MDL	Reported to LOQ	Dilution	Reference Method	Date/Time Prepared	Date/Time Analyzed	Analyst
	* Reactivity - Cyanide	ND		mg/kg	0.250	0.250	1	EPA SW-846 Ch.7.3.3	09/20/2016 10:46	09/20/2016 14:00	AD
								Certifications: CTDOH,PADEP			

Reactivity-Sulfide **Log-in Notes:** **Sample Notes:**

Sample Prepared by Method: Analysis Preparation

CAS No.	Parameter	Result	Flag	Units	LOD/MDL	Reported to LOQ	Dilution	Reference Method	Date/Time Prepared	Date/Time Analyzed	Analyst
	* Reactivity - Sulfide	ND		mg/kg	15.0	15.0	1	EPA SW-846 Ch.7.3.4	09/20/2016 10:47	09/20/2016 14:02	AD
								Certifications: CTDOH,PADEP			

TCLP Extraction for METALS EPA 1311 **Log-in Notes:** **Sample Notes:**

Sample Prepared by Method: EPA SW 846-1311 TCLP ext. for metals

CAS No.	Parameter	Result	Flag	Units	LOD/MDL	Reported to LOQ	Dilution	Reference Method	Date/Time Prepared	Date/Time Analyzed	Analyst
	TCLP Extraction	Completed		N/A	1.00	1.00	1	EPA 1311	09/14/2016 19:15	09/15/2016 12:18	TJM
								Certifications: NELAC-NY10854,CTDOH,NJDEP,PADEP			

Sample Information

Client Sample ID: SB-08-12.5-13.0' **York Sample ID:** 16I0414-05

York Project (SDG) No.	Client Project ID	Matrix	Collection Date/Time	Date Received
16I0414	BEGS-Flatbush Ave Waterman Phase II 15-008-0265	Soil	September 12, 2016 1:50 pm	09/13/2016

Volatile Organics, 8260 - Comprehensive **Log-in Notes:** VOA-CONT **Sample Notes:** VOA-CONT

Sample Prepared by Method: EPA 5035A

CAS No.	Parameter	Result	Flag	Units	LOD/MDL	Reported to LOQ	Dilution	Reference Method	Date/Time Prepared	Date/Time Analyzed	Analyst
630-20-6	1,1,1,2-Tetrachloroethane	ND		mg/kg dry	0.0027	0.0055	1	EPA 8260C	09/19/2016 08:18	09/19/2016 18:13	SS
								Certifications: CTDOH,NELAC-NY10854,NJDEP			
71-55-6	1,1,1-Trichloroethane	ND		mg/kg dry	0.0027	0.0055	1	EPA 8260C	09/19/2016 08:18	09/19/2016 18:13	SS
								Certifications: CTDOH,NELAC-NY10854,NJDEP,PADEP			
79-34-5	1,1,2,2-Tetrachloroethane	ND		mg/kg dry	0.0027	0.0055	1	EPA 8260C	09/19/2016 08:18	09/19/2016 18:13	SS
								Certifications: CTDOH,NELAC-NY10854,NJDEP,PADEP			
76-13-1	1,1,2-Trichloro-1,2,2-trifluoroethane (Freon 113)	ND		mg/kg dry	0.0027	0.0055	1	EPA 8260C	09/19/2016 08:18	09/19/2016 18:13	SS
								Certifications: CTDOH,NELAC-NY10854,NJDEP			
79-00-5	1,1,2-Trichloroethane	ND		mg/kg dry	0.0027	0.0055	1	EPA 8260C	09/19/2016 08:18	09/19/2016 18:13	SS
								Certifications: CTDOH,NELAC-NY10854,NJDEP,PADEP			
75-34-3	1,1-Dichloroethane	ND		mg/kg dry	0.0027	0.0055	1	EPA 8260C	09/19/2016 08:18	09/19/2016 18:13	SS
								Certifications: CTDOH,NELAC-NY10854,NJDEP,PADEP			
[illegible]5-4	1,1-Dichloroethylene	ND		mg/kg dry	0.0027	0.0055	1	EPA 8260C	09/19/2016 08:18	09/19/2016 18:13	SS
								Certifications: CTDOH,NELAC-NY10854,NJDEP,PADEP			

Sample Information

Client Sample ID: SB-08-12.5-13.0'

York Sample ID: 16I0414-05

York Project (SDG) No.	Client Project ID	Matrix	Collection Date/Time	Date Received
16I0414	BEGS-Flatbush Ave Waterman Phase II 15-008-0265	Soil	September 12, 2016 1:50 pm	09/13/2016

Volatile Organics, 8260 - Comprehensive

Log-in Notes: VOA-CONT **Sample Notes:** VOA-CONT

Sample Prepared by Method: EPA 5035A

CAS No.	Parameter	Result	Flag	Units	Reported to LOD/MDL	LOQ	Dilution	Reference Method	Date/Time Prepared	Date/Time Analyzed	Analyst
87-61-6	1,2,3-Trichlorobenzene	ND		mg/kg dry	0.0027	0.0055	1	EPA 8260C Certifications: NELAC-NY10854,NJDEP	09/19/2016 08:18	09/19/2016 18:13	SS
96-18-4	1,2,3-Trichloropropane	ND		mg/kg dry	0.0027	0.0055	1	EPA 8260C Certifications: NELAC-NY10854,NJDEP	09/19/2016 08:18	09/19/2016 18:13	SS
120-82-1	1,2,4-Trichlorobenzene	ND		mg/kg dry	0.0027	0.0055	1	EPA 8260C Certifications: NELAC-NY10854,NJDEP	09/19/2016 08:18	09/19/2016 18:13	SS
95-63-6	1,2,4-Trimethylbenzene	ND		mg/kg dry	0.0027	0.0055	1	EPA 8260C Certifications: CTDOH,NELAC-NY10854,NJDEP	09/19/2016 08:18	09/19/2016 18:13	SS
96-12-8	1,2-Dibromo-3-chloropropane	ND		mg/kg dry	0.0027	0.0055	1	EPA 8260C Certifications: CTDOH,NELAC-NY10854,NJDEP	09/19/2016 08:18	09/19/2016 18:13	SS
106-93-4	1,2-Dibromoethane	ND		mg/kg dry	0.0027	0.0055	1	EPA 8260C Certifications: CTDOH,NELAC-NY10854,NJDEP	09/19/2016 08:18	09/19/2016 18:13	SS
95-50-1	1,2-Dichlorobenzene	ND		mg/kg dry	0.0027	0.0055	1	EPA 8260C Certifications: CTDOH,NELAC-NY10854,NJDEP,PADEP	09/19/2016 08:18	09/19/2016 18:13	SS
107-06-2	1,2-Dichloroethane	ND		mg/kg dry	0.0027	0.0055	1	EPA 8260C Certifications: CTDOH,NELAC-NY10854,NJDEP,PADEP	09/19/2016 08:18	09/19/2016 18:13	SS
78-87-5	1,2-Dichloropropane	ND		mg/kg dry	0.0027	0.0055	1	EPA 8260C Certifications: CTDOH,NELAC-NY10854,NJDEP	09/19/2016 08:18	09/19/2016 18:13	SS
108-67-8	1,3,5-Trimethylbenzene	ND		mg/kg dry	0.0027	0.0055	1	EPA 8260C Certifications: CTDOH,NELAC-NY10854,NJDEP	09/19/2016 08:18	09/19/2016 18:13	SS
541-73-1	1,3-Dichlorobenzene	ND		mg/kg dry	0.0027	0.0055	1	EPA 8260C Certifications: CTDOH,NELAC-NY10854,NJDEP,PADEP	09/19/2016 08:18	09/19/2016 18:13	SS
106-46-7	1,4-Dichlorobenzene	ND		mg/kg dry	0.0027	0.0055	1	EPA 8260C Certifications: CTDOH,NELAC-NY10854,NJDEP,PADEP	09/19/2016 08:18	09/19/2016 18:13	SS
123-91-1	1,4-Dioxane	ND		mg/kg dry	0.055	0.11	1	EPA 8260C Certifications: NELAC-NY10854,NJDEP	09/19/2016 08:18	09/19/2016 18:13	SS
78-93-3	2-Butanone	ND		mg/kg dry	0.0027	0.0055	1	EPA 8260C Certifications: CTDOH,NELAC-NY10854,NJDEP	09/19/2016 08:18	09/19/2016 18:13	SS
591-78-6	2-Hexanone	ND		mg/kg dry	0.0027	0.0055	1	EPA 8260C Certifications: CTDOH,NELAC-NY10854,NJDEP	09/19/2016 08:18	09/19/2016 18:13	SS
108-10-1	4-Methyl-2-pentanone	ND		mg/kg dry	0.0027	0.0055	1	EPA 8260C Certifications: CTDOH,NELAC-NY10854,NJDEP	09/19/2016 08:18	09/19/2016 18:13	SS
67-64-1	**Acetone**	**0.0060**	J, B	mg/kg dry	0.0055	0.011	1	EPA 8260C Certifications: CTDOH,NELAC-NY10854,NJDEP	09/19/2016 08:18	09/19/2016 18:13	SS
107-02-8	Acrolein	ND		mg/kg dry	0.0055	0.011	1	EPA 8260C Certifications: CTDOH,NELAC-NY10854,NJDEP	09/19/2016 08:18	09/19/2016 18:13	SS
107-13-1	Acrylonitrile	ND		mg/kg dry	0.0027	0.0055	1	EPA 8260C Certifications: CTDOH,NELAC-NY10854,NJDEP	09/19/2016 08:18	09/19/2016 18:13	SS
71-43-2	Benzene	ND		mg/kg dry	0.0027	0.0055	1	EPA 8260C Certifications: CTDOH,NELAC-NY10854,NJDEP,PADEP	09/19/2016 08:18	09/19/2016 18:13	SS
74-97-5	Bromochloromethane	ND		mg/kg dry	0.0027	0.0055	1	EPA 8260C Certifications: NELAC-NY10854,NJDEP	09/19/2016 08:18	09/19/2016 18:13	SS
75-27-4	Bromodichloromethane	ND		mg/kg dry	0.0027	0.0055	1	EPA 8260C Certifications: CTDOH,NELAC-NY10854,NJDEP,PADEP	09/19/2016 08:18	09/19/2016 18:13	SS

Sample Information

Client Sample ID: SB-08-12.5-13.0' **York Sample ID:** 16I0414-05

York Project (SDG) No.	Client Project ID	Matrix	Collection Date/Time	Date Received
16I0414	BEGS-Flatbush Ave Waterman Phase II 15-008-0265	Soil	September 12, 2016 1:50 pm	09/13/2016

Volatile Organics, 8260 - Comprehensive

Log-in Notes: VOA-CONT **Sample Notes:** VOA-CONT

Sample Prepared by Method: EPA 5035A

CAS No.	Parameter	Result	Flag	Units	Reported to LOD/MDL	LOQ	Dilution	Reference Method	Date/Time Prepared	Date/Time Analyzed	Analyst
75-25-2	Bromoform	ND		mg/kg dry	0.0027	0.0055	1	EPA 8260C Certifications: CTDOH,NELAC-NY10854,NJDEP,PADEP	09/19/2016 08:18	09/19/2016 18:13	SS
74-83-9	Bromomethane	ND		mg/kg dry	0.0027	0.0055	1	EPA 8260C Certifications: CTDOH,NELAC-NY10854,NJDEP,PADEP	09/19/2016 08:18	09/19/2016 18:13	SS
75-15-0	Carbon disulfide	ND		mg/kg dry	0.0027	0.0055	1	EPA 8260C Certifications: CTDOH,NELAC-NY10854,NJDEP	09/19/2016 08:18	09/19/2016 18:13	SS
56-23-5	Carbon tetrachloride	ND		mg/kg dry	0.0027	0.0055	1	EPA 8260C Certifications: CTDOH,NELAC-NY10854,NJDEP,PADEP	09/19/2016 08:18	09/19/2016 18:13	SS
108-90-7	Chlorobenzene	ND		mg/kg dry	0.0027	0.0055	1	EPA 8260C Certifications: CTDOH,NELAC-NY10854,NJDEP,PADEP	09/19/2016 08:18	09/19/2016 18:13	SS
75-00-3	Chloroethane	ND		mg/kg dry	0.0027	0.0055	1	EPA 8260C Certifications: CTDOH,NELAC-NY10854,NJDEP,PADEP	09/19/2016 08:18	09/19/2016 18:13	SS
67-66-3	Chloroform	ND		mg/kg dry	0.0027	0.0055	1	EPA 8260C Certifications: CTDOH,NELAC-NY10854,NJDEP,PADEP	09/19/2016 08:18	09/19/2016 18:13	SS
[illegible]7-3	Chloromethane	ND		mg/kg dry	0.0027	0.0055	1	EPA 8260C Certifications: CTDOH,NELAC-NY10854,NJDEP,PADEP	09/19/2016 08:18	09/19/2016 18:13	SS
156-59-2	cis-1,2-Dichloroethylene	ND		mg/kg dry	0.0027	0.0055	1	EPA 8260C Certifications: CTDOH,NELAC-NY10854,NJDEP	09/19/2016 08:18	09/19/2016 18:13	SS
10061-01-5	cis-1,3-Dichloropropylene	ND		mg/kg dry	0.0027	0.0055	1	EPA 8260C Certifications: CTDOH,NELAC-NY10854,NJDEP,PADEP	09/19/2016 08:18	09/19/2016 18:13	SS
110-82-7	Cyclohexane	ND		mg/kg dry	0.0027	0.0055	1	EPA 8260C Certifications: NELAC-NY10854,NJDEP	09/19/2016 08:18	09/19/2016 18:13	SS
124-48-1	Dibromochloromethane	ND		mg/kg dry	0.0027	0.0055	1	EPA 8260C Certifications: NELAC-NY10854,NJDEP,PADEP	09/19/2016 08:18	09/19/2016 18:13	SS
74-95-3	Dibromomethane	ND		mg/kg dry	0.0027	0.0055	1	EPA 8260C Certifications: NELAC-NY10854,NJDEP	09/19/2016 08:18	09/19/2016 18:13	SS
75-71-8	Dichlorodifluoromethane	ND		mg/kg dry	0.0027	0.0055	1	EPA 8260C Certifications: NELAC-NY10854,NJDEP	09/19/2016 08:18	09/19/2016 18:13	SS
100-41-4	Ethyl Benzene	ND		mg/kg dry	0.0027	0.0055	1	EPA 8260C Certifications: CTDOH,NELAC-NY10854,NJDEP,PADEP	09/19/2016 08:18	09/19/2016 18:13	SS
87-68-3	Hexachlorobutadiene	ND		mg/kg dry	0.0027	0.0055	1	EPA 8260C Certifications: NELAC-NY10854,NJDEP	09/19/2016 08:18	09/19/2016 18:13	SS
98-82-8	Isopropylbenzene	ND		mg/kg dry	0.0027	0.0055	1	EPA 8260C Certifications: CTDOH,NELAC-NY10854,NJDEP	09/19/2016 08:18	09/19/2016 18:13	SS
79-20-9	Methyl acetate	ND		mg/kg dry	0.0027	0.0055	1	EPA 8260C Certifications: NELAC-NY10854,NJDEP	09/19/2016 08:18	09/19/2016 18:13	SS
1634-04-4	Methyl tert-butyl ether (MTBE)	ND		mg/kg dry	0.0027	0.0055	1	EPA 8260C Certifications: CTDOH,NELAC-NY10854,NJDEP	09/19/2016 08:18	09/19/2016 18:13	SS
108-87-2	Methylcyclohexane	ND		mg/kg dry	0.0027	0.0055	1	EPA 8260C Certifications: NELAC-NY10854,NJDEP	09/19/2016 08:18	09/19/2016 18:13	SS
75-09-2	**Methylene chloride**	**0.0074**	J	mg/kg dry	0.0055	0.011	1	EPA 8260C Certifications: CTDOH,NELAC-NY10854,NJDEP,PADEP	09/19/2016 08:18	09/19/2016 18:13	SS
[illegible]1-8	n-Butylbenzene	ND		mg/kg dry	0.0027	0.0055	1	EPA 8260C Certifications: CTDOH,NELAC-NY10854,NJDEP	09/19/2016 08:18	09/19/2016 18:13	SS

Sample Information

Client Sample ID: SB-08-12.5-13.0'

York Sample ID: 16I0414-05

York Project (SDG) No.	Client Project ID	Matrix	Collection Date/Time	Date Received
16I0414	BEGS-Flatbush Ave Waterman Phase II 15-008-0265	Soil	September 12, 2016 1:50 pm	09/13/2016

Volatile Organics, 8260 - Comprehensive

Log-in Notes: VOA-CONT **Sample Notes:** VOA-CONT

Sample Prepared by Method: EPA 5035A

CAS No.	Parameter	Result	Flag	Units	Reported to LOD/MDL	LOQ	Dilution	Reference Method	Date/Time Prepared	Date/Time Analyzed	Analyst
103-65-1	n-Propylbenzene	ND		mg/kg dry	0.0027	0.0055	1	EPA 8260C Certifications: CTDOH,NELAC-NY10854,NJDEP	09/19/2016 08:18	09/19/2016 18:13	SS
95-47-6	o-Xylene	ND		mg/kg dry	0.0027	0.0055	1	EPA 8260C Certifications: CTDOH,NELAC-NY10854	09/19/2016 08:18	09/19/2016 18:13	SS
179601-23-1	p- & m- Xylenes	ND		mg/kg dry	0.0055	0.011	1	EPA 8260C Certifications: CTDOH,NELAC-NY10854	09/19/2016 08:18	09/19/2016 18:13	SS
99-87-6	p-Isopropyltoluene	ND		mg/kg dry	0.0027	0.0055	1	EPA 8260C Certifications: CTDOH,NELAC-NY10854,NJDEP	09/19/2016 08:18	09/19/2016 18:13	SS
135-98-8	sec-Butylbenzene	ND		mg/kg dry	0.0027	0.0055	1	EPA 8260C Certifications: CTDOH,NELAC-NY10854,NJDEP	09/19/2016 08:18	09/19/2016 18:13	SS
100-42-5	Styrene	ND		mg/kg dry	0.0027	0.0055	1	EPA 8260C Certifications: CTDOH,NELAC-NY10854,NJDEP	09/19/2016 08:18	09/19/2016 18:13	SS
75-65-0	tert-Butyl alcohol (TBA)	ND		mg/kg dry	0.0027	0.0055	1	EPA 8260C Certifications: NELAC-NY10854,NJDEP	09/19/2016 08:18	09/19/2016 18:13	SS
98-06-6	tert-Butylbenzene	ND		mg/kg dry	0.0027	0.0055	1	EPA 8260C Certifications: CTDOH,NELAC-NY10854,NJDEP	09/19/2016 08:18	09/19/2016 18:13	SS
127-18-4	Tetrachloroethylene	ND		mg/kg dry	0.0027	0.0055	1	EPA 8260C Certifications: CTDOH,NELAC-NY10854,NJDEP,PADEP	09/19/2016 08:18	09/19/2016 18:13	SS
108-88-3	Toluene	ND		mg/kg dry	0.0027	0.0055	1	EPA 8260C Certifications: CTDOH,NELAC-NY10854,NJDEP,PADEP	09/19/2016 08:18	09/19/2016 18:13	SS
156-60-5	trans-1,2-Dichloroethylene	ND		mg/kg dry	0.0027	0.0055	1	EPA 8260C Certifications: CTDOH,NELAC-NY10854,NJDEP	09/19/2016 08:18	09/19/2016 18:13	SS
10061-02-6	trans-1,3-Dichloropropylene	ND		mg/kg dry	0.0027	0.0055	1	EPA 8260C Certifications: CTDOH,NELAC-NY10854,NJDEP,PADEP	09/19/2016 08:18	09/19/2016 18:13	SS
79-01-6	Trichloroethylene	ND		mg/kg dry	0.0027	0.0055	1	EPA 8260C Certifications: CTDOH,NELAC-NY10854,NJDEP,PADEP	09/19/2016 08:18	09/19/2016 18:13	SS
75-69-4	Trichlorofluoromethane	ND		mg/kg dry	0.0027	0.0055	1	EPA 8260C Certifications: CTDOH,NELAC-NY10854,NJDEP,PADEP	09/19/2016 08:18	09/19/2016 18:13	SS
75-01-4	Vinyl Chloride	ND		mg/kg dry	0.0027	0.0055	1	EPA 8260C Certifications: CTDOH,NELAC-NY10854,NJDEP,PADEP	09/19/2016 08:18	09/19/2016 18:13	SS
1330-20-7	Xylenes, Total	ND		mg/kg dry	0.0082	0.016	1	EPA 8260C Certifications: CTDOH,NELAC-NY10854,NJDEP,PADEP	09/19/2016 08:18	09/19/2016 18:13	SS

	Surrogate Recoveries	Result	Acceptance Range
17060-07-0	*Surrogate: 1,2-Dichloroethane-d4*	*110 %*	*77-125*
2037-26-5	*Surrogate: Toluene-d8*	*96.6 %*	*85-120*
460-00-4	*Surrogate: p-Bromofluorobenzene*	*94.4 %*	*76-130*

Total Solids

Log-in Notes: VOA-CONT **Sample Notes:**

Sample Prepared by Method: % Solids Prep

CAS No.	Parameter	Result	Flag	Units	LOD/MDL	Reported to LOQ	Dilution	Reference Method	Date/Time Prepared	Date/Time Analyzed	Analyst
solids	*** % Solids**	**91.7**		%	0.100	0.100	1	SM 2540G Certifications: CTDOH	09/19/2016 14:18	09/20/2016 08:04	LAB

Sample Information

Client Sample ID: SB-08-12.5-13.0' **York Sample ID:** 16I0414-05

York Project (SDG) No.	Client Project ID	Matrix	Collection Date/Time	Date Received
16I0414	BEGS-Flatbush Ave Waterman Phase II 15-008-0265	Soil	September 12, 2016 1:50 pm	09/13/2016

Sample Information

Client Sample ID: SB-08-Comp **York Sample ID:** 16I0414-06

York Project (SDG) No.	Client Project ID	Matrix	Collection Date/Time	Date Received
16I0414	BEGS-Flatbush Ave Waterman Phase II 15-008-0265	Soil	September 12, 2016 2:00 pm	09/13/2016

Semi-Volatiles, PAH Target List **Log-in Notes:** **Sample Notes:**

Sample Prepared by Method: EPA 3550C

CAS No.	Parameter	Result	Flag	Units	Reported to LOD/MDL	LOQ	Dilution	Reference Method	Date/Time Prepared	Date/Time Analyzed	Analyst
91-57-6	2-Methylnaphthalene	ND		mg/kg dry	0.0468	0.0933	2	EPA 8270D Certifications: CTDOH,NELAC-NY10854,NJDEP,PADEP	09/19/2016 11:58	09/20/2016 11:08	SR
83-32-9	Acenaphthene	ND		mg/kg dry	0.0468	0.0933	2	EPA 8270D Certifications: CTDOH,NELAC-NY10854,NJDEP,PADEP	09/19/2016 11:58	09/20/2016 11:08	SR
208-96-8	Acenaphthylene	ND		mg/kg dry	0.0468	0.0933	2	EPA 8270D Certifications: CTDOH,NELAC-NY10854,NJDEP,PADEP	09/19/2016 11:58	09/20/2016 11:08	SR
120-12-7	Anthracene	ND		mg/kg dry	0.0468	0.0933	2	EPA 8270D Certifications: CTDOH,NELAC-NY10854,NJDEP,PADEP	09/19/2016 11:58	09/20/2016 11:08	SR
56-55-3	Benzo(a)anthracene	ND		mg/kg dry	0.0468	0.0933	2	EPA 8270D Certifications: CTDOH,NELAC-NY10854,NJDEP,PADEP	09/19/2016 11:58	09/20/2016 11:08	SR
50-32-8	Benzo(a)pyrene	ND		mg/kg dry	0.0468	0.0933	2	EPA 8270D Certifications: CTDOH,NELAC-NY10854,NJDEP,PADEP	09/19/2016 11:58	09/20/2016 11:08	SR
205-99-2	Benzo(b)fluoranthene	ND		mg/kg dry	0.0468	0.0933	2	EPA 8270D Certifications: CTDOH,NELAC-NY10854,NJDEP,PADEP	09/19/2016 11:58	09/20/2016 11:08	SR
191-24-2	Benzo(g,h,i)perylene	ND		mg/kg dry	0.0468	0.0933	2	EPA 8270D Certifications: CTDOH,NELAC-NY10854,NJDEP,PADEP	09/19/2016 11:58	09/20/2016 11:08	SR
207-08-9	Benzo(k)fluoranthene	ND		mg/kg dry	0.0468	0.0933	2	EPA 8270D Certifications: CTDOH,NELAC-NY10854,NJDEP,PADEP	09/19/2016 11:58	09/20/2016 11:08	SR
218-01-9	Chrysene	ND		mg/kg dry	0.0468	0.0933	2	EPA 8270D Certifications: CTDOH,NELAC-NY10854,NJDEP,PADEP	09/19/2016 11:58	09/20/2016 11:08	SR
53-70-3	Dibenzo(a,h)anthracene	ND		mg/kg dry	0.0468	0.0933	2	EPA 8270D Certifications: CTDOH,NELAC-NY10854,NJDEP,PADEP	09/19/2016 11:58	09/20/2016 11:08	SR
206-44-0	Fluoranthene	ND		mg/kg dry	0.0468	0.0933	2	EPA 8270D Certifications: CTDOH,NELAC-NY10854,NJDEP,PADEP	09/19/2016 11:58	09/20/2016 11:08	SR
86-73-7	Fluorene	ND		mg/kg dry	0.0468	0.0933	2	EPA 8270D Certifications: NELAC-NY10854,NJDEP,PADEP	09/19/2016 11:58	09/20/2016 11:08	SR
193-39-5	Indeno(1,2,3-cd)pyrene	ND		mg/kg dry	0.0468	0.0933	2	EPA 8270D Certifications: CTDOH,NELAC-NY10854,NJDEP,PADEP	09/19/2016 11:58	09/20/2016 11:08	SR
91-20-3	Naphthalene	ND		mg/kg dry	0.0468	0.0933	2	EPA 8270D Certifications: CTDOH,NELAC-NY10854,NJDEP,PADEP	09/19/2016 11:58	09/20/2016 11:08	SR
85-01-8	Phenanthrene	ND		mg/kg dry	0.0468	0.0933	2	EPA 8270D Certifications: CTDOH,NELAC-NY10854,NJDEP,PADEP	09/19/2016 11:58	09/20/2016 11:08	SR
[illegible]0-0	Pyrene	ND		mg/kg dry	0.0468	0.0933	2	EPA 8270D Certifications: CTDOH,NELAC-NY10854,NJDEP,PADEP	09/19/2016 11:58	09/20/2016 11:08	SR

Sample Information

Client Sample ID: SB-08-Comp

York Sample ID: 16I0414-06

York Project (SDG) No.	Client Project ID	Matrix	Collection Date/Time	Date Received
16I0414	BEGS-Flatbush Ave Waterman Phase II 15-008-0265	Soil	September 12, 2016 2:00 pm	09/13/2016

Semi-Volatiles, PAH Target List

Log-in Notes: **Sample Notes:**

Sample Prepared by Method: EPA 3550C

CAS No.	Parameter	Result	Flag	Units	Reported to LOD/MDL	LOQ	Dilution	Reference Method	Date/Time Prepared	Date/Time Analyzed	Analyst
	Surrogate Recoveries	**Result**		**Acceptance Range**							
4165-60-0	*Surrogate: Nitrobenzene-d5*	*41.1 %*		*22-108*							
321-60-8	*Surrogate: 2-Fluorobiphenyl*	*41.9 %*		*21-113*							
1718-51-0	*Surrogate: Terphenyl-d14*	*43.3 %*		*24-116*							

Polychlorinated Biphenyls (PCB)

Log-in Notes: **Sample Notes:**

Sample Prepared by Method: EPA 3550C

CAS No.	Parameter	Result	Flag	Units	LOD/MDL	Reported to LOQ	Dilution	Reference Method	Date/Time Prepared	Date/Time Analyzed	Analyst
12674-11-2	Aroclor 1016	ND		mg/kg dry	0.0186	0.0186	1	EPA 8082A Certifications: NELAC-NY10854,CTDOH,NJDEP,PADEP	09/20/2016 07:11	09/20/2016 13:54	AMC
11104-28-2	Aroclor 1221	ND		mg/kg dry	0.0186	0.0186	1	EPA 8082A Certifications: NELAC-NY10854,CTDOH,NJDEP,PADEP	09/20/2016 07:11	09/20/2016 13:54	AMC
11141-16-5	Aroclor 1232	ND		mg/kg dry	0.0186	0.0186	1	EPA 8082A Certifications: NELAC-NY10854,CTDOH,NJDEP,PADEP	09/20/2016 07:11	09/20/2016 13:54	AMC
53469-21-9	Aroclor 1242	ND		mg/kg dry	0.0186	0.0186	1	EPA 8082A Certifications: NELAC-NY10854,CTDOH,NJDEP,PADEP	09/20/2016 07:11	09/20/2016 13:54	AMC
12672-29-6	Aroclor 1248	ND		mg/kg dry	0.0186	0.0186	1	EPA 8082A Certifications: NELAC-NY10854,CTDOH,NJDEP,PADEP	09/20/2016 07:11	09/20/2016 13:54	AMC
11097-69-1	Aroclor 1254	ND		mg/kg dry	0.0186	0.0186	1	EPA 8082A Certifications: NELAC-NY10854,CTDOH,NJDEP,PADEP	09/20/2016 07:11	09/20/2016 13:54	AMC
11096-82-5	Aroclor 1260	ND		mg/kg dry	0.0186	0.0186	1	EPA 8082A Certifications: NELAC-NY10854,CTDOH,NJDEP,PADEP	09/20/2016 07:11	09/20/2016 13:54	AMC
1336-36-3	* Total PCBs	ND		mg/kg dry	0.0186	0.0186	1	EPA 8082A Certifications:	09/20/2016 07:11	09/20/2016 13:54	AMC
	Surrogate Recoveries	**Result**		**Acceptance Range**							
877-09-8	*Surrogate: Tetrachloro-m-xylene*	*95.5 %*		*30-140*							
2051-24-3	*Surrogate: Decachlorobiphenyl*	*100 %*		*30-140*							

Total Petroleum Hydrocarbons-DRO (C10-C28)

Log-in Notes: **Sample Notes:**

Sample Prepared by Method: EPA 3550C

CAS No.	Parameter	Result	Flag	Units	LOD/MDL	Reported to LOQ	Dilution	Reference Method	Date/Time Prepared	Date/Time Analyzed	Analyst
	Total Petroleum Hydrocarbons-DRO	**41.8**		mg/kg dry	3.80	11.2	1	EPA 8015D Certifications: NELAC-NY10854,NJDEP,PADEP	09/19/2016 12:01	09/19/2016 18:57	AMC
	Surrogate Recoveries	**Result**		**Acceptance Range**							
638-68-6	*Surrogate: Triacontane*	*73.0 %*		*30-150*							

Total Petroleum Hydrocarbons-GRO (C5-C10)

Log-in Notes: **Sample Notes:** VOA-CONT

Sample Prepared by Method: EPA 5035A

CAS No.	Parameter	Result	Flag	Units	LOD/MDL	Reported to LOQ	Dilution	Reference Method	Date/Time Prepared	Date/Time Analyzed	Analyst

Sample Information

Client Sample ID: SB-08-Comp

York Sample ID: 16I0414-06

York Project (SDG) No.	Client Project ID	Matrix	Collection Date/Time	Date Received
16I0414	BEGS-Flatbush Ave Waterman Phase II 15-008-0265	Soil	September 12, 2016 2:00 pm	09/13/2016

Total Petroleum Hydrocarbons-GRO (C5-C10)

Log-in Notes:

Sample Notes: VOA-CONT

Sample Prepared by Method: EPA 5035A

CAS No.	Parameter	Result	Flag	Units	LOD/MDL	Reported to LOQ	Dilution	Reference Method	Date/Time Prepared	Date/Time Analyzed	Analyst
	Total Petroleum Hydrocarbons-GRO	ND		mg/kg dry	44.8	89.5	100	EPA 8015D Certifications: NELAC-NY10854,NJDEP,PADEP	09/19/2016 15:46	09/20/2016 01:29	OW

	Surrogate Recoveries	Result	Acceptance Range
460-00-4	*Surrogate: p-Bromofluorobenzene*	*103 %*	*70-130*

Metals, TCLP RCRA

Log-in Notes:

Sample Notes:

Sample Prepared by Method: EPA 3015A/1311

CAS No.	Parameter	Result	Flag	Units	LOD/MDL	Reported to LOQ	Dilution	Reference Method	Date/Time Prepared	Date/Time Analyzed	Analyst
7440-38-2	**Arsenic**	**0.006**		mg/L	0.004	0.004	1	EPA 6010C/1311 Certifications: CTDOH,NELAC-NY10854,NJDEP,PADEP	09/15/2016 11:37	09/16/2016 01:46	KV
7440-39-3	**Barium**	**0.352**		mg/L	0.011	0.011	1	EPA 6010C/1311 Certifications: CTDOH,NELAC-NY10854,NJDEP,PADEP	09/15/2016 11:37	09/16/2016 01:46	KV
[illegible]43-9	Cadmium	ND		mg/L	0.003	0.003	1	EPA 6010C/1311 Certifications: CTDOH,NELAC-NY10854,NJDEP,PADEP	09/15/2016 11:37	09/16/2016 01:46	KV
7440-47-3	Chromium	ND		mg/L	0.006	0.006	1	EPA 6010C/1311 Certifications: CTDOH,NELAC-NY10854,NJDEP,PADEP	09/15/2016 11:37	09/16/2016 01:46	KV
7439-92-1	**Lead**	**0.025**		mg/L	0.003	0.003	1	EPA 6010C/1311 Certifications: CTDOH,NELAC-NY10854,NJDEP,PADEP	09/15/2016 11:37	09/16/2016 01:46	KV
7782-49-2	Selenium	ND	M-SeTC	mg/L	0.011	0.011	1	EPA 6010C/1311 Certifications: CTDOH,NELAC-NY10854,NJDEP,PADEP	09/15/2016 11:37	09/16/2016 01:46	KV
7440-22-4	Silver	ND		mg/L	0.006	0.006	1	EPA 6010C/1311 Certifications: CTDOH,NELAC-NY10854,NJDEP,PADEP	09/15/2016 11:37	09/16/2016 01:46	KV

Mercury TCLP by 7473

Log-in Notes:

Sample Notes:

Sample Prepared by Method: EPA 7473 water

CAS No.	Parameter	Result	Flag	Units	LOD/MDL	Reported to LOQ	Dilution	Reference Method	Date/Time Prepared	Date/Time Analyzed	Analyst
7439-97-6	Mercury	ND		mg/L	0.0000390	0.000200	1	EPA 7473/1311 Certifications: CTDOH,NJDEP,PADEP,NELAC-NY10854	09/16/2016 06:16	09/16/2016 14:16	ALD

Ignitability

Log-in Notes:

Sample Notes:

Sample Prepared by Method: Analysis Preparation

CAS No.	Parameter	Result	Flag	Units	LOD/MDL	Reported to LOQ	Dilution	Reference Method	Date/Time Prepared	Date/Time Analyzed	Analyst
	* Ignitability	Non-Ignit.		-	1	1	1	EPA 1030P Certifications: CTDOH,PADEP	09/14/2016 18:37	09/15/2016 03:12	AA

Total Solids

Log-in Notes:

Sample Notes:

Sample Prepared by Method: % Solids Prep

CAS No.	Parameter	Result	Flag	Units	LOD/MDL	Reported to LOQ	Dilution	Reference Method	Date/Time Prepared	Date/Time Analyzed	Analyst

Sample Information

Client Sample ID: SB-08-Comp

York Sample ID: 16I0414-06

York Project (SDG) No.	Client Project ID	Matrix	Collection Date/Time	Date Received
16I0414	BEGS-Flatbush Ave Waterman Phase II 15-008-0265	Soil	September 12, 2016 2:00 pm	09/13/2016

Total Solids

Log-in Notes: **Sample Notes:**

Sample Prepared by Method: % Solids Prep

CAS No.	Parameter	Result	Flag	Units	LOD/MDL	Reported to LOQ	Dilution	Reference Method	Date/Time Prepared	Date/Time Analyzed	Analyst
solids	* % Solids	89.4		%	0.100	0.100	1	SM 2540G Certifications: CTDOH	09/19/2016 07:35	09/19/2016 14:01	LAB

Corrosivity

Log-in Notes: **Sample Notes:**

Sample Prepared by Method: Analysis Preparation

CAS No.	Parameter	Result	Flag	Units	LOD/MDL	Reported to LOQ	Dilution	Reference Method	Date/Time Prepared	Date/Time Analyzed	Analyst
	pH	7.45	HT-pH	pH units		0.500	1	EPA 9045D Certifications: NELAC-NY10854,CTDOH,PADEP	09/20/2016 14:13	09/20/2016 16:22	DM1

Reactivity-Cyanide

Log-in Notes: **Sample Notes:**

Sample Prepared by Method: Analysis Preparation

CAS No.	Parameter	Result	Flag	Units	LOD/MDL	Reported to LOQ	Dilution	Reference Method	Date/Time Prepared	Date/Time Analyzed	Analyst
	* Reactivity - Cyanide	ND		mg/kg	0.250	0.250	1	EPA SW-846 Ch.7.3.3 Certifications: CTDOH,PADEP	09/20/2016 10:46	09/20/2016 14:00	AD

Reactivity-Sulfide

Log-in Notes: **Sample Notes:**

Sample Prepared by Method: Analysis Preparation

CAS No.	Parameter	Result	Flag	Units	LOD/MDL	Reported to LOQ	Dilution	Reference Method	Date/Time Prepared	Date/Time Analyzed	Analyst
	* Reactivity - Sulfide	40.0		mg/kg	15.0	15.0	1	EPA SW-846 Ch.7.3.4 Certifications: CTDOH,PADEP	09/20/2016 10:47	09/20/2016 14:02	AD

TCLP Extraction for METALS EPA 1311

Log-in Notes: **Sample Notes:**

Sample Prepared by Method: EPA SW 846-1311 TCLP ext. for metals

CAS No.	Parameter	Result	Flag	Units	LOD/MDL	Reported to LOQ	Dilution	Reference Method	Date/Time Prepared	Date/Time Analyzed	Analyst
	TCLP Extraction	Completed		N/A	1.00	1.00	1	EPA 1311 Certifications: NELAC-NY10854,CTDOH,NJDEP,PADEP	09/14/2016 19:15	09/15/2016 12:18	TJM

Sample Information

Client Sample ID: SB-09-9.5-10.0'

York Sample ID: 16I0414-07

York Project (SDG) No.	Client Project ID	Matrix	Collection Date/Time	Date Received
16I0414	BEGS-Flatbush Ave Waterman Phase II 15-008-0265	Soil	September 12, 2016 2:30 pm	09/13/2016

Volatile Organics, 8260 - Comprehensive

Log-in Notes: VOA-CONT **Sample Notes:** VOA-CONT

Sample Prepared by Method: EPA 5035A

CAS No.	Parameter	Result	Flag	Units	Reported to LOD/MDL	LOQ	Dilution	Reference Method	Date/Time Prepared	Date/Time Analyzed	Anal

Sample Information

Client Sample ID: SB-09-9.5-10.0'

York Sample ID: 16I0414-07

York Project (SDG) No.	Client Project ID	Matrix	Collection Date/Time	Date Received
16I0414	BEGS-Flatbush Ave Waterman Phase II 15-008-0265	Soil	September 12, 2016 2:30 pm	09/13/2016

Volatile Organics, 8260 - Comprehensive

Log-in Notes: VOA-CONT **Sample Notes:** VOA-CONT

Sample Prepared by Method: EPA 5035A

CAS No.	Parameter	Result	Flag	Units	Reported to LOD/MDL	LOQ	Dilution	Reference Method	Date/Time Prepared	Date/Time Analyzed	Analyst
630-20-6	1,1,1,2-Tetrachloroethane	ND		mg/kg dry	0.0028	0.0057	1	EPA 8260C Certifications: CTDOH,NELAC-NY10854,NJDEP	09/19/2016 08:18	09/19/2016 18:44	SS
71-55-6	1,1,1-Trichloroethane	ND		mg/kg dry	0.0028	0.0057	1	EPA 8260C Certifications: CTDOH,NELAC-NY10854,NJDEP,PADEP	09/19/2016 08:18	09/19/2016 18:44	SS
79-34-5	1,1,2,2-Tetrachloroethane	ND		mg/kg dry	0.0028	0.0057	1	EPA 8260C Certifications: CTDOH,NELAC-NY10854,NJDEP,PADEP	09/19/2016 08:18	09/19/2016 18:44	SS
76-13-1	1,1,2-Trichloro-1,2,2-trifluoroethane (Freon 113)	ND		mg/kg dry	0.0028	0.0057	1	EPA 8260C Certifications: CTDOH,NELAC-NY10854,NJDEP	09/19/2016 08:18	09/19/2016 18:44	SS
79-00-5	1,1,2-Trichloroethane	ND		mg/kg dry	0.0028	0.0057	1	EPA 8260C Certifications: CTDOH,NELAC-NY10854,NJDEP,PADEP	09/19/2016 08:18	09/19/2016 18:44	SS
75-34-3	1,1-Dichloroethane	ND		mg/kg dry	0.0028	0.0057	1	EPA 8260C Certifications: CTDOH,NELAC-NY10854,NJDEP,PADEP	09/19/2016 08:18	09/19/2016 18:44	SS
[illegible]35-4	1,1-Dichloroethylene	ND		mg/kg dry	0.0028	0.0057	1	EPA 8260C Certifications: CTDOH,NELAC-NY10854,NJDEP,PADEP	09/19/2016 08:18	09/19/2016 18:44	SS
[illegible]7-61-6	1,2,3-Trichlorobenzene	ND		mg/kg dry	0.0028	0.0057	1	EPA 8260C Certifications: NELAC-NY10854,NJDEP	09/19/2016 08:18	09/19/2016 18:44	SS
96-18-4	1,2,3-Trichloropropane	ND		mg/kg dry	0.0028	0.0057	1	EPA 8260C Certifications: NELAC-NY10854,NJDEP	09/19/2016 08:18	09/19/2016 18:44	SS
120-82-1	1,2,4-Trichlorobenzene	ND		mg/kg dry	0.0028	0.0057	1	EPA 8260C Certifications: NELAC-NY10854,NJDEP	09/19/2016 08:18	09/19/2016 18:44	SS
95-63-6	1,2,4-Trimethylbenzene	ND		mg/kg dry	0.0028	0.0057	1	EPA 8260C Certifications: CTDOH,NELAC-NY10854,NJDEP	09/19/2016 08:18	09/19/2016 18:44	SS
96-12-8	1,2-Dibromo-3-chloropropane	ND		mg/kg dry	0.0028	0.0057	1	EPA 8260C Certifications: CTDOH,NELAC-NY10854,NJDEP	09/19/2016 08:18	09/19/2016 18:44	SS
106-93-4	1,2-Dibromoethane	ND		mg/kg dry	0.0028	0.0057	1	EPA 8260C Certifications: CTDOH,NELAC-NY10854,NJDEP	09/19/2016 08:18	09/19/2016 18:44	SS
95-50-1	1,2-Dichlorobenzene	ND		mg/kg dry	0.0028	0.0057	1	EPA 8260C Certifications: CTDOH,NELAC-NY10854,NJDEP,PADEP	09/19/2016 08:18	09/19/2016 18:44	SS
107-06-2	1,2-Dichloroethane	ND		mg/kg dry	0.0028	0.0057	1	EPA 8260C Certifications: CTDOH,NELAC-NY10854,NJDEP,PADEP	09/19/2016 08:18	09/19/2016 18:44	SS
78-87-5	1,2-Dichloropropane	ND		mg/kg dry	0.0028	0.0057	1	EPA 8260C Certifications: CTDOH,NELAC-NY10854,NJDEP	09/19/2016 08:18	09/19/2016 18:44	SS
108-67-8	1,3,5-Trimethylbenzene	ND		mg/kg dry	0.0028	0.0057	1	EPA 8260C Certifications: CTDOH,NELAC-NY10854,NJDEP	09/19/2016 08:18	09/19/2016 18:44	SS
541-73-1	1,3-Dichlorobenzene	ND		mg/kg dry	0.0028	0.0057	1	EPA 8260C Certifications: CTDOH,NELAC-NY10854,NJDEP,PADEP	09/19/2016 08:18	09/19/2016 18:44	SS
106-46-7	1,4-Dichlorobenzene	ND		mg/kg dry	0.0028	0.0057	1	EPA 8260C Certifications: CTDOH,NELAC-NY10854,NJDEP,PADEP	09/19/2016 08:18	09/19/2016 18:44	SS
123-91-1	1,4-Dioxane	ND		mg/kg dry	0.057	0.11	1	EPA 8260C Certifications: NELAC-NY10854,NJDEP	09/19/2016 08:18	09/19/2016 18:44	SS
[illegible]-3	2-Butanone	ND		mg/kg dry	0.0028	0.0057	1	EPA 8260C Certifications: CTDOH,NELAC-NY10854,NJDEP	09/19/2016 08:18	09/19/2016 18:44	SS

Sample Information

Client Sample ID: SB-09-9.5-10.0'

York Sample ID: 16I0414-07

York Project (SDG) No.	Client Project ID	Matrix	Collection Date/Time	Date Received
16I0414	BEGS-Flatbush Ave Waterman Phase II 15-008-0265	Soil	September 12, 2016 2:30 pm	09/13/2016

Volatile Organics, 8260 - Comprehensive

Log-in Notes: VOA-CONT **Sample Notes:** VOA-CONT

Sample Prepared by Method: EPA 5035A

CAS No.	Parameter	Result	Flag	Units	Reported to LOD/MDL	LOQ	Dilution	Reference Method	Date/Time Prepared	Date/Time Analyzed	Analyst
591-78-6	2-Hexanone	ND		mg/kg dry	0.0028	0.0057	1	EPA 8260C Certifications: CTDOH,NELAC-NY10854,NJDEP	09/19/2016 08:18	09/19/2016 18:44	SS
108-10-1	4-Methyl-2-pentanone	ND		mg/kg dry	0.0028	0.0057	1	EPA 8260C Certifications: CTDOH,NELAC-NY10854,NJDEP	09/19/2016 08:18	09/19/2016 18:44	SS
67-64-1	**Acetone**	**0.0088**	J, B	mg/kg dry	0.0057	0.011	1	EPA 8260C Certifications: CTDOH,NELAC-NY10854,NJDEP	09/19/2016 08:18	09/19/2016 18:44	SS
107-02-8	Acrolein	ND		mg/kg dry	0.0057	0.011	1	EPA 8260C Certifications: CTDOH,NELAC-NY10854,NJDEP	09/19/2016 08:18	09/19/2016 18:44	SS
107-13-1	Acrylonitrile	ND		mg/kg dry	0.0028	0.0057	1	EPA 8260C Certifications: CTDOH,NELAC-NY10854,NJDEP	09/19/2016 08:18	09/19/2016 18:44	SS
71-43-2	Benzene	ND		mg/kg dry	0.0028	0.0057	1	EPA 8260C Certifications: CTDOH,NELAC-NY10854,NJDEP,PADEP	09/19/2016 08:18	09/19/2016 18:44	SS
74-97-5	Bromochloromethane	ND		mg/kg dry	0.0028	0.0057	1	EPA 8260C Certifications: NELAC-NY10854,NJDEP	09/19/2016 08:18	09/19/2016 18:44	SS
75-27-4	Bromodichloromethane	ND		mg/kg dry	0.0028	0.0057	1	EPA 8260C Certifications: CTDOH,NELAC-NY10854,NJDEP,PADEP	09/19/2016 08:18	09/19/2016 18:44	SS
75-25-2	Bromoform	ND		mg/kg dry	0.0028	0.0057	1	EPA 8260C Certifications: CTDOH,NELAC-NY10854,NJDEP,PADEP	09/19/2016 08:18	09/19/2016 18:44	SS
74-83-9	Bromomethane	ND		mg/kg dry	0.0028	0.0057	1	EPA 8260C Certifications: CTDOH,NELAC-NY10854,NJDEP,PADEP	09/19/2016 08:18	09/19/2016 18:44	SS
75-15-0	Carbon disulfide	ND		mg/kg dry	0.0028	0.0057	1	EPA 8260C Certifications: CTDOH,NELAC-NY10854,NJDEP	09/19/2016 08:18	09/19/2016 18:44	SS
56-23-5	Carbon tetrachloride	ND		mg/kg dry	0.0028	0.0057	1	EPA 8260C Certifications: CTDOH,NELAC-NY10854,NJDEP,PADEP	09/19/2016 08:18	09/19/2016 18:44	SS
108-90-7	Chlorobenzene	ND		mg/kg dry	0.0028	0.0057	1	EPA 8260C Certifications: CTDOH,NELAC-NY10854,NJDEP,PADEP	09/19/2016 08:18	09/19/2016 18:44	SS
75-00-3	Chloroethane	ND		mg/kg dry	0.0028	0.0057	1	EPA 8260C Certifications: CTDOH,NELAC-NY10854,NJDEP,PADEP	09/19/2016 08:18	09/19/2016 18:44	SS
67-66-3	Chloroform	ND		mg/kg dry	0.0028	0.0057	1	EPA 8260C Certifications: CTDOH,NELAC-NY10854,NJDEP,PADEP	09/19/2016 08:18	09/19/2016 18:44	SS
74-87-3	Chloromethane	ND		mg/kg dry	0.0028	0.0057	1	EPA 8260C Certifications: CTDOH,NELAC-NY10854,NJDEP,PADEP	09/19/2016 08:18	09/19/2016 18:44	SS
156-59-2	cis-1,2-Dichloroethylene	ND		mg/kg dry	0.0028	0.0057	1	EPA 8260C Certifications: CTDOH,NELAC-NY10854,NJDEP	09/19/2016 08:18	09/19/2016 18:44	SS
10061-01-5	cis-1,3-Dichloropropylene	ND		mg/kg dry	0.0028	0.0057	1	EPA 8260C Certifications: CTDOH,NELAC-NY10854,NJDEP,PADEP	09/19/2016 08:18	09/19/2016 18:44	SS
110-82-7	Cyclohexane	ND		mg/kg dry	0.0028	0.0057	1	EPA 8260C Certifications: NELAC-NY10854,NJDEP	09/19/2016 08:18	09/19/2016 18:44	SS
124-48-1	Dibromochloromethane	ND		mg/kg dry	0.0028	0.0057	1	EPA 8260C Certifications: NELAC-NY10854,NJDEP,PADEP	09/19/2016 08:18	09/19/2016 18:44	SS
74-95-3	Dibromomethane	ND		mg/kg dry	0.0028	0.0057	1	EPA 8260C Certifications: NELAC-NY10854,NJDEP	09/19/2016 08:18	09/19/2016 18:44	SS
75-71-8	Dichlorodifluoromethane	ND		mg/kg dry	0.0028	0.0057	1	EPA 8260C Certifications: NELAC-NY10854,NJDEP	09/19/2016 08:18	09/19/2016 18:44	SS

Sample Information

Client Sample ID: SB-09-9.5-10.0' **York Sample ID:** 16I0414-07

York Project (SDG) No.	Client Project ID	Matrix	Collection Date/Time	Date Received
16I0414	BEGS-Flatbush Ave Waterman Phase II 15-008-0265	Soil	September 12, 2016 2:30 pm	09/13/2016

Volatile Organics, 8260 - Comprehensive

Log-in Notes: VOA-CONT **Sample Notes:** VOA-CONT

Sample Prepared by Method: EPA 5035A

CAS No.	Parameter	Result	Flag	Units	Reported to LOD/MDL	LOQ	Dilution	Reference Method	Date/Time Prepared	Date/Time Analyzed	Analyst
100-41-4	Ethyl Benzene	ND		mg/kg dry	0.0028	0.0057	1	EPA 8260C Certifications: CTDOH,NELAC-NY10854,NJDEP,PADEP	09/19/2016 08:18	09/19/2016 18:44	SS
87-68-3	Hexachlorobutadiene	ND		mg/kg dry	0.0028	0.0057	1	EPA 8260C Certifications: NELAC-NY10854,NJDEP	09/19/2016 08:18	09/19/2016 18:44	SS
98-82-8	Isopropylbenzene	ND		mg/kg dry	0.0028	0.0057	1	EPA 8260C Certifications: CTDOH,NELAC-NY10854,NJDEP	09/19/2016 08:18	09/19/2016 18:44	SS
79-20-9	Methyl acetate	ND		mg/kg dry	0.0028	0.0057	1	EPA 8260C Certifications: NELAC-NY10854,NJDEP	09/19/2016 08:18	09/19/2016 18:44	SS
1634-04-4	Methyl tert-butyl ether (MTBE)	ND		mg/kg dry	0.0028	0.0057	1	EPA 8260C Certifications: CTDOH,NELAC-NY10854,NJDEP	09/19/2016 08:18	09/19/2016 18:44	SS
108-87-2	Methylcyclohexane	ND		mg/kg dry	0.0028	0.0057	1	EPA 8260C Certifications: NELAC-NY10854,NJDEP	09/19/2016 08:18	09/19/2016 18:44	SS
75-09-2	**Methylene chloride**	**0.010**	J	mg/kg dry	0.0057	0.011	1	EPA 8260C Certifications: CTDOH,NELAC-NY10854,NJDEP,PADEP	09/19/2016 08:18	09/19/2016 18:44	SS
[illegible]1-8	n-Butylbenzene	ND		mg/kg dry	0.0028	0.0057	1	EPA 8260C Certifications: CTDOH,NELAC-NY10854,NJDEP	09/19/2016 08:18	09/19/2016 18:44	SS
103-65-1	n-Propylbenzene	ND		mg/kg dry	0.0028	0.0057	1	EPA 8260C Certifications: CTDOH,NELAC-NY10854,NJDEP	09/19/2016 08:18	09/19/2016 18:44	SS
95-47-6	o-Xylene	ND		mg/kg dry	0.0028	0.0057	1	EPA 8260C Certifications: CTDOH,NELAC-NY10854	09/19/2016 08:18	09/19/2016 18:44	SS
179601-23-1	p- & m- Xylenes	ND		mg/kg dry	0.0057	0.011	1	EPA 8260C Certifications: CTDOH,NELAC-NY10854	09/19/2016 08:18	09/19/2016 18:44	SS
99-87-6	p-Isopropyltoluene	ND		mg/kg dry	0.0028	0.0057	1	EPA 8260C Certifications: CTDOH,NELAC-NY10854,NJDEP	09/19/2016 08:18	09/19/2016 18:44	SS
135-98-8	sec-Butylbenzene	ND		mg/kg dry	0.0028	0.0057	1	EPA 8260C Certifications: CTDOH,NELAC-NY10854,NJDEP	09/19/2016 08:18	09/19/2016 18:44	SS
100-42-5	Styrene	ND		mg/kg dry	0.0028	0.0057	1	EPA 8260C Certifications: CTDOH,NELAC-NY10854,NJDEP	09/19/2016 08:18	09/19/2016 18:44	SS
75-65-0	tert-Butyl alcohol (TBA)	ND		mg/kg dry	0.0028	0.0057	1	EPA 8260C Certifications: NELAC-NY10854,NJDEP	09/19/2016 08:18	09/19/2016 18:44	SS
98-06-6	tert-Butylbenzene	ND		mg/kg dry	0.0028	0.0057	1	EPA 8260C Certifications: CTDOH,NELAC-NY10854,NJDEP	09/19/2016 08:18	09/19/2016 18:44	SS
127-18-4	Tetrachloroethylene	ND		mg/kg dry	0.0028	0.0057	1	EPA 8260C Certifications: CTDOH,NELAC-NY10854,NJDEP,PADEP	09/19/2016 08:18	09/19/2016 18:44	SS
108-88-3	Toluene	ND		mg/kg dry	0.0028	0.0057	1	EPA 8260C Certifications: CTDOH,NELAC-NY10854,NJDEP,PADEP	09/19/2016 08:18	09/19/2016 18:44	SS
156-60-5	trans-1,2-Dichloroethylene	ND		mg/kg dry	0.0028	0.0057	1	EPA 8260C Certifications: CTDOH,NELAC-NY10854,NJDEP	09/19/2016 08:18	09/19/2016 18:44	SS
10061-02-6	trans-1,3-Dichloropropylene	ND		mg/kg dry	0.0028	0.0057	1	EPA 8260C Certifications: CTDOH,NELAC-NY10854,NJDEP,PADEP	09/19/2016 08:18	09/19/2016 18:44	SS
79-01-6	Trichloroethylene	ND		mg/kg dry	0.0028	0.0057	1	EPA 8260C Certifications: CTDOH,NELAC-NY10854,NJDEP,PADEP	09/19/2016 08:18	09/19/2016 18:44	SS
[illegible]	Trichlorofluoromethane	ND		mg/kg dry	0.0028	0.0057	1	EPA 8260C Certifications: CTDOH,NELAC-NY10854,NJDEP,PADEP	09/19/2016 08:18	09/19/2016 18:44	SS

Sample Information

Client Sample ID: SB-09-9.5-10.0' **York Sample ID:** 16I0414-07

York Project (SDG) No.	Client Project ID	Matrix	Collection Date/Time	Date Received
16I0414	BEGS-Flatbush Ave Waterman Phase II 15-008-0265	Soil	September 12, 2016 2:30 pm	09/13/2016

Volatile Organics, 8260 - Comprehensive **Log-in Notes:** VOA-CONT **Sample Notes:** VOA-CONT

Sample Prepared by Method: EPA 5035A

CAS No.	Parameter	Result	Flag	Units	Reported to LOD/MDL	LOQ	Dilution	Reference Method	Date/Time Prepared	Date/Time Analyzed	Analyst
75-01-4	Vinyl Chloride	ND		mg/kg dry	0.0028	0.0057	1	EPA 8260C Certifications: CTDOH,NELAC-NY10854,NJDEP,PADEP	09/19/2016 08:18	09/19/2016 18:44	SS
1330-20-7	Xylenes, Total	ND		mg/kg dry	0.0085	0.017	1	EPA 8260C Certifications: CTDOH,NELAC-NY10854,NJDEP,PADEP	09/19/2016 08:18	09/19/2016 18:44	SS

	Surrogate Recoveries	Result	Acceptance Range
17060-07-0	*Surrogate: 1,2-Dichloroethane-d4*	*106 %*	*77-125*
2037-26-5	*Surrogate: Toluene-d8*	*96.5 %*	*85-120*
460-00-4	*Surrogate: p-Bromofluorobenzene*	*95.1 %*	*76-130*

Total Solids **Log-in Notes:** VOA-CONT **Sample Notes:**

Sample Prepared by Method: % Solids Prep

CAS No.	Parameter	Result	Flag	Units	LOD/MDL	Reported to LOQ	Dilution	Reference Method	Date/Time Prepared	Date/Time Analyzed	Analyst
solids	* % Solids	**88.0**		%	0.100	0.100	1	SM 2540G Certifications: CTDOH	09/19/2016 14:18	09/20/2016 08:04	LAB

Sample Information

Client Sample ID: SB-09-Comp **York Sample ID:** 16I0414-08

York Project (SDG) No.	Client Project ID	Matrix	Collection Date/Time	Date Received
16I0414	BEGS-Flatbush Ave Waterman Phase II 15-008-0265	Soil	September 12, 2016 2:40 pm	09/13/2016

Semi-Volatiles, PAH Target List **Log-in Notes:** **Sample Notes:**

Sample Prepared by Method: EPA 3550C

CAS No.	Parameter	Result	Flag	Units	Reported to LOD/MDL	LOQ	Dilution	Reference Method	Date/Time Prepared	Date/Time Analyzed	Analyst
91-57-6	2-Methylnaphthalene	ND		mg/kg dry	0.0469	0.0936	2	EPA 8270D Certifications: CTDOH,NELAC-NY10854,NJDEP,PADEP	09/19/2016 11:58	09/20/2016 11:39	SR
83-32-9	Acenaphthene	ND		mg/kg dry	0.0469	0.0936	2	EPA 8270D Certifications: CTDOH,NELAC-NY10854,NJDEP,PADEP	09/19/2016 11:58	09/20/2016 11:39	SR
208-96-8	Acenaphthylene	ND		mg/kg dry	0.0469	0.0936	2	EPA 8270D Certifications: CTDOH,NELAC-NY10854,NJDEP,PADEP	09/19/2016 11:58	09/20/2016 11:39	SR
120-12-7	Anthracene	ND		mg/kg dry	0.0469	0.0936	2	EPA 8270D Certifications: CTDOH,NELAC-NY10854,NJDEP,PADEP	09/19/2016 11:58	09/20/2016 11:39	SR
56-55-3	Benzo(a)anthracene	ND		mg/kg dry	0.0469	0.0936	2	EPA 8270D Certifications: CTDOH,NELAC-NY10854,NJDEP,PADEP	09/19/2016 11:58	09/20/2016 11:39	SR
50-32-8	Benzo(a)pyrene	ND		mg/kg dry	0.0469	0.0936	2	EPA 8270D Certifications: CTDOH,NELAC-NY10854,NJDEP,PADEP	09/19/2016 11:58	09/20/2016 11:39	SR
205-99-2	Benzo(b)fluoranthene	ND		mg/kg dry	0.0469	0.0936	2	EPA 8270D Certifications: CTDOH,NELAC-NY10854,NJDEP,PADEP	09/19/2016 11:58	09/20/2016 11:39	SR

Sample Information

Client Sample ID: SB-09-Comp

York Sample ID: 16I0414-08

York Project (SDG) No.	Client Project ID	Matrix	Collection Date/Time	Date Received
16I0414	BEGS-Flatbush Ave Waterman Phase II 15-008-0265	Soil	September 12, 2016 2:40 pm	09/13/2016

Semi-Volatiles, PAH Target List

Log-in Notes: **Sample Notes:**

Sample Prepared by Method: EPA 3550C

CAS No.	Parameter	Result	Flag	Units	Reported to LOD/MDL	LOQ	Dilution	Reference Method	Date/Time Prepared	Date/Time Analyzed	Analyst
191-24-2	Benzo(g,h,i)perylene	ND		mg/kg dry	0.0469	0.0936	2	EPA 8270D Certifications: CTDOH,NELAC-NY10854,NJDEP,PADEP	09/19/2016 11:58	09/20/2016 11:39	SR
207-08-9	Benzo(k)fluoranthene	ND		mg/kg dry	0.0469	0.0936	2	EPA 8270D Certifications: CTDOH,NELAC-NY10854,NJDEP,PADEP	09/19/2016 11:58	09/20/2016 11:39	SR
218-01-9	Chrysene	ND		mg/kg dry	0.0469	0.0936	2	EPA 8270D Certifications: CTDOH,NELAC-NY10854,NJDEP,PADEP	09/19/2016 11:58	09/20/2016 11:39	SR
53-70-3	Dibenzo(a,h)anthracene	ND		mg/kg dry	0.0469	0.0936	2	EPA 8270D Certifications: CTDOH,NELAC-NY10854,NJDEP,PADEP	09/19/2016 11:58	09/20/2016 11:39	SR
206-44-0	Fluoranthene	ND		mg/kg dry	0.0469	0.0936	2	EPA 8270D Certifications: CTDOH,NELAC-NY10854,NJDEP,PADEP	09/19/2016 11:58	09/20/2016 11:39	SR
86-73-7	Fluorene	ND		mg/kg dry	0.0469	0.0936	2	EPA 8270D Certifications: NELAC-NY10854,NJDEP,PADEP	09/19/2016 11:58	09/20/2016 11:39	SR
193-39-5	Indeno(1,2,3-cd)pyrene	ND		mg/kg dry	0.0469	0.0936	2	EPA 8270D Certifications: CTDOH,NELAC-NY10854,NJDEP,PADEP	09/19/2016 11:58	09/20/2016 11:39	SR
[illegible]0-3	Naphthalene	ND		mg/kg dry	0.0469	0.0936	2	EPA 8270D Certifications: CTDOH,NELAC-NY10854,NJDEP,PADEP	09/19/2016 11:58	09/20/2016 11:39	SR
85-01-8	Phenanthrene	ND		mg/kg dry	0.0469	0.0936	2	EPA 8270D Certifications: CTDOH,NELAC-NY10854,NJDEP,PADEP	09/19/2016 11:58	09/20/2016 11:39	SR
129-00-0	Pyrene	ND		mg/kg dry	0.0469	0.0936	2	EPA 8270D Certifications: CTDOH,NELAC-NY10854,NJDEP,PADEP	09/19/2016 11:58	09/20/2016 11:39	SR

	Surrogate Recoveries	Result	Acceptance Range
4165-60-0	*Surrogate: Nitrobenzene-d5*	*31.7 %*	*22-108*
321-60-8	*Surrogate: 2-Fluorobiphenyl*	*38.0 %*	*21-113*
1718-51-0	*Surrogate: Terphenyl-d14*	*31.9 %*	*24-116*

Polychlorinated Biphenyls (PCB)

Log-in Notes: **Sample Notes:**

Sample Prepared by Method: EPA 3550C

CAS No.	Parameter	Result	Flag	Units	LOD/MDL	Reported to LOQ	Dilution	Reference Method	Date/Time Prepared	Date/Time Analyzed	Analyst
12674-11-2	Aroclor 1016	ND		mg/kg dry	0.0187	0.0187	1	EPA 8082A Certifications: NELAC-NY10854,CTDOH,NJDEP,PADEP	09/20/2016 07:11	09/20/2016 14:08	AMC
11104-28-2	Aroclor 1221	ND		mg/kg dry	0.0187	0.0187	1	EPA 8082A Certifications: NELAC-NY10854,CTDOH,NJDEP,PADEP	09/20/2016 07:11	09/20/2016 14:08	AMC
11141-16-5	Aroclor 1232	ND		mg/kg dry	0.0187	0.0187	1	EPA 8082A Certifications: NELAC-NY10854,CTDOH,NJDEP,PADEP	09/20/2016 07:11	09/20/2016 14:08	AMC
53469-21-9	Aroclor 1242	ND		mg/kg dry	0.0187	0.0187	1	EPA 8082A Certifications: NELAC-NY10854,CTDOH,NJDEP,PADEP	09/20/2016 07:11	09/20/2016 14:08	AMC
12672-29-6	Aroclor 1248	ND		mg/kg dry	0.0187	0.0187	1	EPA 8082A Certifications: NELAC-NY10854,CTDOH,NJDEP,PADEP	09/20/2016 07:11	09/20/2016 14:08	AMC
11097-69-1	Aroclor 1254	ND		mg/kg dry	0.0187	0.0187	1	EPA 8082A Certifications: NELAC-NY10854,CTDOH,NJDEP,PADEP	09/20/2016 07:11	09/20/2016 14:08	AMC
[illegible]6-82-5	Aroclor 1260	ND		mg/kg dry	0.0187	0.0187	1	EPA 8082A Certifications: NELAC-NY10854,CTDOH,NJDEP,PADEP	09/20/2016 07:11	09/20/2016 14:08	AMC

Sample Information

Client Sample ID: SB-09-Comp

York Sample ID: 16I0414-08

York Project (SDG) No.	Client Project ID	Matrix	Collection Date/Time	Date Received
16I0414	BEGS-Flatbush Ave Waterman Phase II 15-008-0265	Soil	September 12, 2016 2:40 pm	09/13/2016

Polychlorinated Biphenyls (PCB)

Log-in Notes: **Sample Notes:**

Sample Prepared by Method: EPA 3550C

CAS No.	Parameter	Result	Flag	Units	LOD/MDL	Reported to LOQ	Dilution	Reference Method	Date/Time Prepared	Date/Time Analyzed	Analyst
1336-36-3	* Total PCBs	ND		mg/kg dry	0.0187	0.0187	1	EPA 8082A Certifications:	09/20/2016 07:11	09/20/2016 14:08	AMC

	Surrogate Recoveries	Result	Acceptance Range
877-09-8	*Surrogate: Tetrachloro-m-xylene*	*98.5 %*	*30-140*
2051-24-3	*Surrogate: Decachlorobiphenyl*	*106 %*	*30-140*

Total Petroleum Hydrocarbons-DRO (C10-C28)

Log-in Notes: **Sample Notes:**

Sample Prepared by Method: EPA 3550C

CAS No.	Parameter	Result	Flag	Units	LOD/MDL	Reported to LOQ	Dilution	Reference Method	Date/Time Prepared	Date/Time Analyzed	Analyst
	Total Petroleum Hydrocarbons-DRO	**43.9**		mg/kg dry	3.82	11.2	1	EPA 8015D Certifications: NELAC-NY10854,NJDEP,PADEP	09/19/2016 12:01	09/19/2016 19:27	AMC

	Surrogate Recoveries	Result	Acceptance Range
638-68-6	*Surrogate: Triacontane*	*70.3 %*	*30-150*

Total Petroleum Hydrocarbons-GRO (C5-C10)

Log-in Notes: **Sample Notes:** VOA-CONT

Sample Prepared by Method: EPA 5035A

CAS No.	Parameter	Result	Flag	Units	LOD/MDL	Reported to LOQ	Dilution	Reference Method	Date/Time Prepared	Date/Time Analyzed	Analyst
	Total Petroleum Hydrocarbons-GRO	ND		mg/kg dry	44.9	89.8	100	EPA 8015D Certifications: NELAC-NY10854,NJDEP,PADEP	09/19/2016 15:46	09/20/2016 02:07	OW

	Surrogate Recoveries	Result	Acceptance Range
460-00-4	*Surrogate: p-Bromofluorobenzene*	*103 %*	*70-130*

Metals, TCLP RCRA

Log-in Notes: **Sample Notes:**

Sample Prepared by Method: EPA 3015A/1311

CAS No.	Parameter	Result	Flag	Units	LOD/MDL	Reported to LOQ	Dilution	Reference Method	Date/Time Prepared	Date/Time Analyzed	Analyst
7440-38-2	Arsenic	ND		mg/L	0.004	0.004	1	EPA 6010C/1311 Certifications: CTDOH,NELAC-NY10854,NJDEP,PADEP	09/15/2016 11:37	09/16/2016 01:51	KV
7440-39-3	**Barium**	**0.169**		mg/L	0.011	0.011	1	EPA 6010C/1311 Certifications: CTDOH,NELAC-NY10854,NJDEP,PADEP	09/15/2016 11:37	09/16/2016 01:51	KV
7440-43-9	Cadmium	ND		mg/L	0.003	0.003	1	EPA 6010C/1311 Certifications: CTDOH,NELAC-NY10854,NJDEP,PADEP	09/15/2016 11:37	09/16/2016 01:51	KV
7440-47-3	Chromium	ND		mg/L	0.006	0.006	1	EPA 6010C/1311 Certifications: CTDOH,NELAC-NY10854,NJDEP,PADEP	09/15/2016 11:37	09/16/2016 01:51	KV
7439-92-1	**Lead**	**0.020**		mg/L	0.003	0.003	1	EPA 6010C/1311 Certifications: CTDOH,NELAC-NY10854,NJDEP,PADEP	09/15/2016 11:37	09/16/2016 01:51	KV
7782-49-2	Selenium	ND	M-SeTC	mg/L	0.011	0.011	1	EPA 6010C/1311 Certifications: CTDOH,NELAC-NY10854,NJDEP,PADEP	09/15/2016 11:37	09/16/2016 01:51	KV
7440-22-4	Silver	ND		mg/L	0.006	0.006	1	EPA 6010C/1311 Certifications: CTDOH,NELAC-NY10854,NJDEP,PADEP	09/15/2016 11:37	09/16/2016 01:51	KV

Sample Information

Client Sample ID: SB-09-Comp

York Sample ID: 16I0414-08

York Project (SDG) No.	Client Project ID	Matrix	Collection Date/Time	Date Received
16I0414	BEGS-Flatbush Ave Waterman Phase II 15-008-0265	Soil	September 12, 2016 2:40 pm	09/13/2016

Mercury TCLP by 7473

Log-in Notes: **Sample Notes:**

Sample Prepared by Method: EPA 7473 water

CAS No.	Parameter	Result	Flag	Units	LOD/MDL	Reported to LOQ	Dilution	Reference Method	Date/Time Prepared	Date/Time Analyzed	Analyst
7439-97-6	Mercury	ND		mg/L	0.0000390	0.000200	1	EPA 7473/1311	09/16/2016 06:16	09/16/2016 14:16	ALD
								Certifications: CTDOH,NJDEP,PADEP,NELAC-NY10854			

Ignitability

Log-in Notes: **Sample Notes:**

Sample Prepared by Method: Analysis Preparation

CAS No.	Parameter	Result	Flag	Units	LOD/MDL	Reported to LOQ	Dilution	Reference Method	Date/Time Prepared	Date/Time Analyzed	Analyst
	* Ignitability	Non-Ignit.		-	1	1	1	EPA 1030P	09/14/2016 18:37	09/15/2016 03:12	AA
								Certifications: CTDOH,PADEP			

Total Solids

Log-in Notes: **Sample Notes:**

Sample Prepared by Method: % Solids Prep

CAS No.	Parameter	Result	Flag	Units	LOD/MDL	Reported to LOQ	Dilution	Reference Method	Date/Time Prepared	Date/Time Analyzed	Analyst
solids	*** % Solids**	**89.1**		%	0.100	0.100	1	SM 2540G	09/19/2016 07:35	09/19/2016 14:01	LAB
								Certifications: CTDOH			

Corrosivity

Log-in Notes: **Sample Notes:**

Sample Prepared by Method: Analysis Preparation

CAS No.	Parameter	Result	Flag	Units	LOD/MDL	Reported to LOQ	Dilution	Reference Method	Date/Time Prepared	Date/Time Analyzed	Analyst
	pH	**6.54**	HT-pH	pH units		0.500	1	EPA 9045D	09/20/2016 14:13	09/20/2016 16:22	DM1
								Certifications: NELAC-NY10854,CTDOH,PADEP			

Reactivity-Cyanide

Log-in Notes: **Sample Notes:**

Sample Prepared by Method: Analysis Preparation

CAS No.	Parameter	Result	Flag	Units	LOD/MDL	Reported to LOQ	Dilution	Reference Method	Date/Time Prepared	Date/Time Analyzed	Analyst
	* Reactivity - Cyanide	ND		mg/kg	0.250	0.250	1	EPA SW-846 Ch.7.3.3	09/20/2016 10:46	09/20/2016 14:00	AD
								Certifications: CTDOH,PADEP			

Reactivity-Sulfide

Log-in Notes: **Sample Notes:**

Sample Prepared by Method: Analysis Preparation

CAS No.	Parameter	Result	Flag	Units	LOD/MDL	Reported to LOQ	Dilution	Reference Method	Date/Time Prepared	Date/Time Analyzed	Analyst
	* Reactivity - Sulfide	ND		mg/kg	15.0	15.0	1	EPA SW-846 Ch.7.3.4	09/20/2016 10:47	09/20/2016 14:02	AD
								Certifications: CTDOH,PADEP			

TCLP Extraction for METALS EPA 1311

Log-in Notes: **Sample Notes:**

Sample Prepared by Method: EPA SW 846-1311 TCLP ext. for metals

CAS No.	Parameter	Result	Flag	Units	LOD/MDL	Reported to LOQ	Dilution	Reference Method	Date/Time Prepared	Date/Time Analyzed	Analyst
	TCLP Extraction	Completed		N/A	1.00	1.00	1	EPA 1311	09/14/2016 19:15	09/15/2016 12:18	TJM
								Certifications: NELAC-NY10854,CTDOH,NJDEP,PADEP			

Sample Information

Client Sample ID: SB-09-Comp

York Sample ID: 16I0414-08

York Project (SDG) No.	Client Project ID	Matrix	Collection Date/Time	Date Received
16I0414	BEGS-Flatbush Ave Waterman Phase II 15-008-0265	Soil	September 12, 2016 2:40 pm	09/13/2016

Sample Information

Client Sample ID: SB-18-17.5-18.0'

York Sample ID: 16I0414-09

York Project (SDG) No.	Client Project ID	Matrix	Collection Date/Time	Date Received
16I0414	BEGS-Flatbush Ave Waterman Phase II 15-008-0265	Soil	September 12, 2016 10:00 am	09/13/2016

Volatile Organics, 8260 - Comprehensive

Log-in Notes: VOA-CONT **Sample Notes:** VOA-CONT

Sample Prepared by Method: EPA 5035A

CAS No.	Parameter	Result	Flag	Units	Reported to LOD/MDL	LOQ	Dilution	Reference Method	Date/Time Prepared	Date/Time Analyzed	Analyst
630-20-6	1,1,1,2-Tetrachloroethane	ND		mg/kg dry	0.0027	0.0054	1	EPA 8260C Certifications: CTDOH,NELAC-NY10854,NJDEP	09/19/2016 08:18	09/19/2016 19:14	SS
71-55-6	1,1,1-Trichloroethane	ND		mg/kg dry	0.0027	0.0054	1	EPA 8260C Certifications: CTDOH,NELAC-NY10854,NJDEP,PADEP	09/19/2016 08:18	09/19/2016 19:14	SS
79-34-5	1,1,2,2-Tetrachloroethane	ND		mg/kg dry	0.0027	0.0054	1	EPA 8260C Certifications: CTDOH,NELAC-NY10854,NJDEP,PADEP	09/19/2016 08:18	09/19/2016 19:14	SS
76-13-1	1,1,2-Trichloro-1,2,2-trifluoroethane (Freon 113)	ND		mg/kg dry	0.0027	0.0054	1	EPA 8260C Certifications: CTDOH,NELAC-NY10854,NJDEP	09/19/2016 08:18	09/19/2016 19:14	SS
79-00-5	1,1,2-Trichloroethane	ND		mg/kg dry	0.0027	0.0054	1	EPA 8260C Certifications: CTDOH,NELAC-NY10854,NJDEP,PADEP	09/19/2016 08:18	09/19/2016 19:14	SS
75-34-3	1,1-Dichloroethane	ND		mg/kg dry	0.0027	0.0054	1	EPA 8260C Certifications: CTDOH,NELAC-NY10854,NJDEP,PADEP	09/19/2016 08:18	09/19/2016 19:14	SS
75-35-4	1,1-Dichloroethylene	ND		mg/kg dry	0.0027	0.0054	1	EPA 8260C Certifications: CTDOH,NELAC-NY10854,NJDEP,PADEP	09/19/2016 08:18	09/19/2016 19:14	SS
87-61-6	1,2,3-Trichlorobenzene	ND		mg/kg dry	0.0027	0.0054	1	EPA 8260C Certifications: NELAC-NY10854,NJDEP	09/19/2016 08:18	09/19/2016 19:14	SS
96-18-4	1,2,3-Trichloropropane	ND		mg/kg dry	0.0027	0.0054	1	EPA 8260C Certifications: NELAC-NY10854,NJDEP	09/19/2016 08:18	09/19/2016 19:14	SS
120-82-1	1,2,4-Trichlorobenzene	ND		mg/kg dry	0.0027	0.0054	1	EPA 8260C Certifications: NELAC-NY10854,NJDEP	09/19/2016 08:18	09/19/2016 19:14	SS
95-63-6	1,2,4-Trimethylbenzene	ND		mg/kg dry	0.0027	0.0054	1	EPA 8260C Certifications: CTDOH,NELAC-NY10854,NJDEP	09/19/2016 08:18	09/19/2016 19:14	SS
96-12-8	1,2-Dibromo-3-chloropropane	ND		mg/kg dry	0.0027	0.0054	1	EPA 8260C Certifications: CTDOH,NELAC-NY10854,NJDEP	09/19/2016 08:18	09/19/2016 19:14	SS
106-93-4	1,2-Dibromoethane	ND		mg/kg dry	0.0027	0.0054	1	EPA 8260C Certifications: CTDOH,NELAC-NY10854,NJDEP	09/19/2016 08:18	09/19/2016 19:14	SS
95-50-1	1,2-Dichlorobenzene	ND		mg/kg dry	0.0027	0.0054	1	EPA 8260C Certifications: CTDOH,NELAC-NY10854,NJDEP,PADEP	09/19/2016 08:18	09/19/2016 19:14	SS
107-06-2	1,2-Dichloroethane	ND		mg/kg dry	0.0027	0.0054	1	EPA 8260C Certifications: CTDOH,NELAC-NY10854,NJDEP,PADEP	09/19/2016 08:18	09/19/2016 19:14	SS
78-87-5	1,2-Dichloropropane	ND		mg/kg dry	0.0027	0.0054	1	EPA 8260C Certifications: CTDOH,NELAC-NY10854,NJDEP	09/19/2016 08:18	09/19/2016 19:14	SS
108-67-8	1,3,5-Trimethylbenzene	ND		mg/kg dry	0.0027	0.0054	1	EPA 8260C Certifications: CTDOH,NELAC-NY10854,NJDEP	09/19/2016 08:18	09/19/2016 19:14	SS

Sample Information

Client Sample ID: SB-18-17.5-18.0' **York Sample ID:** 16I0414-09

York Project (SDG) No.	Client Project ID	Matrix	Collection Date/Time	Date Received
16I0414	BEGS-Flatbush Ave Waterman Phase II 15-008-0265	Soil	September 12, 2016 10:00 am	09/13/2016

Volatile Organics, 8260 - Comprehensive **Log-in Notes:** VOA-CONT **Sample Notes:** VOA-CONT

Sample Prepared by Method: EPA 5035A

CAS No.	Parameter	Result	Flag	Units	Reported to LOD/MDL	LOQ	Dilution	Reference Method	Date/Time Prepared	Date/Time Analyzed	Analyst
541-73-1	1,3-Dichlorobenzene	ND		mg/kg dry	0.0027	0.0054	1	EPA 8260C Certifications: CTDOH,NELAC-NY10854,NJDEP,PADEP	09/19/2016 08:18	09/19/2016 19:14	SS
106-46-7	1,4-Dichlorobenzene	ND		mg/kg dry	0.0027	0.0054	1	EPA 8260C Certifications: CTDOH,NELAC-NY10854,NJDEP,PADEP	09/19/2016 08:18	09/19/2016 19:14	SS
123-91-1	1,4-Dioxane	ND		mg/kg dry	0.054	0.11	1	EPA 8260C Certifications: NELAC-NY10854,NJDEP	09/19/2016 08:18	09/19/2016 19:14	SS
78-93-3	2-Butanone	ND		mg/kg dry	0.0027	0.0054	1	EPA 8260C Certifications: CTDOH,NELAC-NY10854,NJDEP	09/19/2016 08:18	09/19/2016 19:14	SS
591-78-6	2-Hexanone	ND		mg/kg dry	0.0027	0.0054	1	EPA 8260C Certifications: CTDOH,NELAC-NY10854,NJDEP	09/19/2016 08:18	09/19/2016 19:14	SS
108-10-1	4-Methyl-2-pentanone	ND		mg/kg dry	0.0027	0.0054	1	EPA 8260C Certifications: CTDOH,NELAC-NY10854,NJDEP	09/19/2016 08:18	09/19/2016 19:14	SS
67-64-1	Acetone	ND		mg/kg dry	0.0054	0.011	1	EPA 8260C Certifications: CTDOH,NELAC-NY10854,NJDEP	09/19/2016 08:18	09/19/2016 19:14	SS
[illegible]02-8	Acrolein	ND		mg/kg dry	0.0054	0.011	1	EPA 8260C Certifications: CTDOH,NELAC-NY10854,NJDEP	09/19/2016 08:18	09/19/2016 19:14	SS
107-13-1	Acrylonitrile	ND		mg/kg dry	0.0027	0.0054	1	EPA 8260C Certifications: CTDOH,NELAC-NY10854,NJDEP	09/19/2016 08:18	09/19/2016 19:14	SS
71-43-2	Benzene	ND		mg/kg dry	0.0027	0.0054	1	EPA 8260C Certifications: CTDOH,NELAC-NY10854,NJDEP,PADEP	09/19/2016 08:18	09/19/2016 19:14	SS
74-97-5	Bromochloromethane	ND		mg/kg dry	0.0027	0.0054	1	EPA 8260C Certifications: NELAC-NY10854,NJDEP	09/19/2016 08:18	09/19/2016 19:14	SS
75-27-4	Bromodichloromethane	ND		mg/kg dry	0.0027	0.0054	1	EPA 8260C Certifications: CTDOH,NELAC-NY10854,NJDEP,PADEP	09/19/2016 08:18	09/19/2016 19:14	SS
75-25-2	Bromoform	ND		mg/kg dry	0.0027	0.0054	1	EPA 8260C Certifications: CTDOH,NELAC-NY10854,NJDEP,PADEP	09/19/2016 08:18	09/19/2016 19:14	SS
74-83-9	Bromomethane	ND		mg/kg dry	0.0027	0.0054	1	EPA 8260C Certifications: CTDOH,NELAC-NY10854,NJDEP,PADEP	09/19/2016 08:18	09/19/2016 19:14	SS
75-15-0	Carbon disulfide	ND		mg/kg dry	0.0027	0.0054	1	EPA 8260C Certifications: CTDOH,NELAC-NY10854,NJDEP	09/19/2016 08:18	09/19/2016 19:14	SS
56-23-5	Carbon tetrachloride	ND		mg/kg dry	0.0027	0.0054	1	EPA 8260C Certifications: CTDOH,NELAC-NY10854,NJDEP,PADEP	09/19/2016 08:18	09/19/2016 19:14	SS
108-90-7	Chlorobenzene	ND		mg/kg dry	0.0027	0.0054	1	EPA 8260C Certifications: CTDOH,NELAC-NY10854,NJDEP,PADEP	09/19/2016 08:18	09/19/2016 19:14	SS
75-00-3	Chloroethane	ND		mg/kg dry	0.0027	0.0054	1	EPA 8260C Certifications: CTDOH,NELAC-NY10854,NJDEP,PADEP	09/19/2016 08:18	09/19/2016 19:14	SS
67-66-3	Chloroform	ND		mg/kg dry	0.0027	0.0054	1	EPA 8260C Certifications: CTDOH,NELAC-NY10854,NJDEP,PADEP	09/19/2016 08:18	09/19/2016 19:14	SS
74-87-3	Chloromethane	ND		mg/kg dry	0.0027	0.0054	1	EPA 8260C Certifications: CTDOH,NELAC-NY10854,NJDEP,PADEP	09/19/2016 08:18	09/19/2016 19:14	SS
156-59-2	cis-1,2-Dichloroethylene	ND		mg/kg dry	0.0027	0.0054	1	EPA 8260C Certifications: CTDOH,NELAC-NY10854,NJDEP	09/19/2016 08:18	09/19/2016 19:14	SS
[illegible]-01-5	cis-1,3-Dichloropropylene	ND		mg/kg dry	0.0027	0.0054	1	EPA 8260C Certifications: CTDOH,NELAC-NY10854,NJDEP,PADEP	09/19/2016 08:18	09/19/2016 19:14	SS

Sample Information

Client Sample ID: SB-18-17.5-18.0' **York Sample ID:** 16I0414-09

York Project (SDG) No.	Client Project ID	Matrix	Collection Date/Time	Date Received
16I0414	BEGS-Flatbush Ave Waterman Phase II 15-008-0265	Soil	September 12, 2016 10:00 am	09/13/2016

Volatile Organics, 8260 - Comprehensive **Log-in Notes:** VOA-CONT **Sample Notes:** VOA-CONT

Sample Prepared by Method: EPA 5035A

CAS No.	Parameter	Result	Flag	Units	Reported to LOD/MDL	LOQ	Dilution	Reference Method	Date/Time Prepared	Date/Time Analyzed	Analyst
110-82-7	Cyclohexane	ND		mg/kg dry	0.0027	0.0054	1	EPA 8260C Certifications: NELAC-NY10854,NJDEP	09/19/2016 08:18	09/19/2016 19:14	SS
124-48-1	Dibromochloromethane	ND		mg/kg dry	0.0027	0.0054	1	EPA 8260C Certifications: NELAC-NY10854,NJDEP,PADEP	09/19/2016 08:18	09/19/2016 19:14	SS
74-95-3	Dibromomethane	ND		mg/kg dry	0.0027	0.0054	1	EPA 8260C Certifications: NELAC-NY10854,NJDEP	09/19/2016 08:18	09/19/2016 19:14	SS
75-71-8	Dichlorodifluoromethane	ND		mg/kg dry	0.0027	0.0054	1	EPA 8260C Certifications: NELAC-NY10854,NJDEP	09/19/2016 08:18	09/19/2016 19:14	SS
100-41-4	Ethyl Benzene	ND		mg/kg dry	0.0027	0.0054	1	EPA 8260C Certifications: CTDOH,NELAC-NY10854,NJDEP,PADEP	09/19/2016 08:18	09/19/2016 19:14	SS
87-68-3	Hexachlorobutadiene	ND		mg/kg dry	0.0027	0.0054	1	EPA 8260C Certifications: NELAC-NY10854,NJDEP	09/19/2016 08:18	09/19/2016 19:14	SS
98-82-8	Isopropylbenzene	ND		mg/kg dry	0.0027	0.0054	1	EPA 8260C Certifications: CTDOH,NELAC-NY10854,NJDEP	09/19/2016 08:18	09/19/2016 19:14	SS
79-20-9	Methyl acetate	ND		mg/kg dry	0.0027	0.0054	1	EPA 8260C Certifications: NELAC-NY10854,NJDEP	09/19/2016 08:18	09/19/2016 19:14	SS
1634-04-4	Methyl tert-butyl ether (MTBE)	ND		mg/kg dry	0.0027	0.0054	1	EPA 8260C Certifications: CTDOH,NELAC-NY10854,NJDEP	09/19/2016 08:18	09/19/2016 19:14	SS
108-87-2	Methylcyclohexane	ND		mg/kg dry	0.0027	0.0054	1	EPA 8260C Certifications: NELAC-NY10854,NJDEP	09/19/2016 08:18	09/19/2016 19:14	SS
75-09-2	**Methylene chloride**	**0.0071**	J	mg/kg dry	0.0054	0.011	1	EPA 8260C Certifications: CTDOH,NELAC-NY10854,NJDEP,PADEP	09/19/2016 08:18	09/19/2016 19:14	SS
104-51-8	n-Butylbenzene	ND		mg/kg dry	0.0027	0.0054	1	EPA 8260C Certifications: CTDOH,NELAC-NY10854,NJDEP	09/19/2016 08:18	09/19/2016 19:14	SS
103-65-1	n-Propylbenzene	ND		mg/kg dry	0.0027	0.0054	1	EPA 8260C Certifications: CTDOH,NELAC-NY10854,NJDEP	09/19/2016 08:18	09/19/2016 19:14	SS
95-47-6	o-Xylene	ND		mg/kg dry	0.0027	0.0054	1	EPA 8260C Certifications: CTDOH,NELAC-NY10854	09/19/2016 08:18	09/19/2016 19:14	SS
179601-23-1	p- & m- Xylenes	ND		mg/kg dry	0.0054	0.011	1	EPA 8260C Certifications: CTDOH,NELAC-NY10854	09/19/2016 08:18	09/19/2016 19:14	SS
99-87-6	p-Isopropyltoluene	ND		mg/kg dry	0.0027	0.0054	1	EPA 8260C Certifications: CTDOH,NELAC-NY10854,NJDEP	09/19/2016 08:18	09/19/2016 19:14	SS
135-98-8	sec-Butylbenzene	ND		mg/kg dry	0.0027	0.0054	1	EPA 8260C Certifications: CTDOH,NELAC-NY10854,NJDEP	09/19/2016 08:18	09/19/2016 19:14	SS
100-42-5	Styrene	ND		mg/kg dry	0.0027	0.0054	1	EPA 8260C Certifications: CTDOH,NELAC-NY10854,NJDEP	09/19/2016 08:18	09/19/2016 19:14	SS
75-65-0	tert-Butyl alcohol (TBA)	ND		mg/kg dry	0.0027	0.0054	1	EPA 8260C Certifications: NELAC-NY10854,NJDEP	09/19/2016 08:18	09/19/2016 19:14	SS
98-06-6	tert-Butylbenzene	ND		mg/kg dry	0.0027	0.0054	1	EPA 8260C Certifications: CTDOH,NELAC-NY10854,NJDEP	09/19/2016 08:18	09/19/2016 19:14	SS
127-18-4	Tetrachloroethylene	ND		mg/kg dry	0.0027	0.0054	1	EPA 8260C Certifications: CTDOH,NELAC-NY10854,NJDEP,PADEP	09/19/2016 08:18	09/19/2016 19:14	SS
108-88-3	Toluene	ND		mg/kg dry	0.0027	0.0054	1	EPA 8260C Certifications: CTDOH,NELAC-NY10854,NJDEP,PADEP	09/19/2016 08:18	09/19/2016 19:14	SS

Sample Information

Client Sample ID: SB-18-17.5-18.0' **York Sample ID:** 16I0414-09

York Project (SDG) No.	Client Project ID	Matrix	Collection Date/Time	Date Received
16I0414	BEGS-Flatbush Ave Waterman Phase II 15-008-0265	Soil	September 12, 2016 10:00 am	09/13/2016

Volatile Organics, 8260 - Comprehensive

Log-in Notes: VOA-CONT **Sample Notes:** VOA-CONT

Sample Prepared by Method: EPA 5035A

CAS No.	Parameter	Result	Flag	Units	Reported to LOD/MDL	LOQ	Dilution	Reference Method	Date/Time Prepared	Date/Time Analyzed	Analyst
156-60-5	trans-1,2-Dichloroethylene	ND		mg/kg dry	0.0027	0.0054	1	EPA 8260C Certifications: CTDOH,NELAC-NY10854,NJDEP	09/19/2016 08:18	09/19/2016 19:14	SS
10061-02-6	trans-1,3-Dichloropropylene	ND		mg/kg dry	0.0027	0.0054	1	EPA 8260C Certifications: CTDOH,NELAC-NY10854,NJDEP,PADEP	09/19/2016 08:18	09/19/2016 19:14	SS
79-01-6	Trichloroethylene	ND		mg/kg dry	0.0027	0.0054	1	EPA 8260C Certifications: CTDOH,NELAC-NY10854,NJDEP,PADEP	09/19/2016 08:18	09/19/2016 19:14	SS
75-69-4	Trichlorofluoromethane	ND		mg/kg dry	0.0027	0.0054	1	EPA 8260C Certifications: CTDOH,NELAC-NY10854,NJDEP,PADEP	09/19/2016 08:18	09/19/2016 19:14	SS
75-01-4	Vinyl Chloride	ND		mg/kg dry	0.0027	0.0054	1	EPA 8260C Certifications: CTDOH,NELAC-NY10854,NJDEP,PADEP	09/19/2016 08:18	09/19/2016 19:14	SS
1330-20-7	Xylenes, Total	ND		mg/kg dry	0.0081	0.016	1	EPA 8260C Certifications: CTDOH,NELAC-NY10854,NJDEP,PADEP	09/19/2016 08:18	09/19/2016 19:14	SS

	Surrogate Recoveries	Result	Acceptance Range
17060-07-0	*Surrogate: 1,2-Dichloroethane-d4*	*108 %*	*77-125*
[illegible]-26-5	*Surrogate: Toluene-d8*	*96.9 %*	*85-120*
460-00-4	*Surrogate: p-Bromofluorobenzene*	*95.5 %*	*76-130*

Total Solids

Log-in Notes: VOA-CONT **Sample Notes:**

Sample Prepared by Method: % Solids Prep

CAS No.	Parameter	Result	Flag	Units	LOD/MDL	Reported to LOQ	Dilution	Reference Method	Date/Time Prepared	Date/Time Analyzed	Analyst
solids	* % Solids	**92.4**		%	0.100	0.100	1	SM 2540G Certifications: CTDOH	09/19/2016 14:18	09/20/2016 08:04	LAB

Sample Information

Client Sample ID: SB-18-Comp **York Sample ID:** 16I0414-10

York Project (SDG) No.	Client Project ID	Matrix	Collection Date/Time	Date Received
16I0414	BEGS-Flatbush Ave Waterman Phase II 15-008-0265	Soil	September 12, 2016 10:10 am	09/13/2016

Semi-Volatiles, PAH Target List

Log-in Notes: **Sample Notes:**

Sample Prepared by Method: EPA 3550C

CAS No.	Parameter	Result	Flag	Units	Reported to LOD/MDL	LOQ	Dilution	Reference Method	Date/Time Prepared	Date/Time Analyzed	Analyst
91-57-6	2-Methylnaphthalene	ND		mg/kg dry	0.0488	0.0973	2	EPA 8270D Certifications: CTDOH,NELAC-NY10854,NJDEP,PADEP	09/19/2016 11:58	09/20/2016 12:10	SR
83-32-9	Acenaphthene	ND		mg/kg dry	0.0488	0.0973	2	EPA 8270D Certifications: CTDOH,NELAC-NY10854,NJDEP,PADEP	09/19/2016 11:58	09/20/2016 12:10	SR
[illegible]96-8	Acenaphthylene	ND		mg/kg dry	0.0488	0.0973	2	EPA 8270D Certifications: CTDOH,NELAC-NY10854,NJDEP,PADEP	09/19/2016 11:58	09/20/2016 12:10	SR

Sample Information

Client Sample ID: SB-18-Comp **York Sample ID:** 16I0414-10

York Project (SDG) No.	Client Project ID	Matrix	Collection Date/Time	Date Received
16I0414	BEGS-Flatbush Ave Waterman Phase II 15-008-0265	Soil	September 12, 2016 10:10 am	09/13/2016

Semi-Volatiles, PAH Target List

Log-in Notes: **Sample Notes:**

Sample Prepared by Method: EPA 3550C

CAS No.	Parameter	Result	Flag	Units	Reported to LOD/MDL	LOQ	Dilution	Reference Method	Date/Time Prepared	Date/Time Analyzed	Analyst
120-12-7	Anthracene	ND		mg/kg dry	0.0488	0.0973	2	EPA 8270D Certifications:	09/19/2016 11:58 CTDOH,NELAC-NY10854,NJDEP,PADEP	09/20/2016 12:10	SR
56-55-3	Benzo(a)anthracene	ND		mg/kg dry	0.0488	0.0973	2	EPA 8270D Certifications:	09/19/2016 11:58 CTDOH,NELAC-NY10854,NJDEP,PADEP	09/20/2016 12:10	SR
50-32-8	Benzo(a)pyrene	ND		mg/kg dry	0.0488	0.0973	2	EPA 8270D Certifications:	09/19/2016 11:58 CTDOH,NELAC-NY10854,NJDEP,PADEP	09/20/2016 12:10	SR
205-99-2	Benzo(b)fluoranthene	ND		mg/kg dry	0.0488	0.0973	2	EPA 8270D Certifications:	09/19/2016 11:58 CTDOH,NELAC-NY10854,NJDEP,PADEP	09/20/2016 12:10	SR
191-24-2	Benzo(g,h,i)perylene	ND		mg/kg dry	0.0488	0.0973	2	EPA 8270D Certifications:	09/19/2016 11:58 CTDOH,NELAC-NY10854,NJDEP,PADEP	09/20/2016 12:10	SR
207-08-9	Benzo(k)fluoranthene	ND		mg/kg dry	0.0488	0.0973	2	EPA 8270D Certifications:	09/19/2016 11:58 CTDOH,NELAC-NY10854,NJDEP,PADEP	09/20/2016 12:10	SR
218-01-9	Chrysene	ND		mg/kg dry	0.0488	0.0973	2	EPA 8270D Certifications:	09/19/2016 11:58 CTDOH,NELAC-NY10854,NJDEP,PADEP	09/20/2016 12:10	SR
53-70-3	Dibenzo(a,h)anthracene	ND		mg/kg dry	0.0488	0.0973	2	EPA 8270D Certifications:	09/19/2016 11:58 CTDOH,NELAC-NY10854,NJDEP,PADEP	09/20/2016 12:10	SR
206-44-0	Fluoranthene	ND		mg/kg dry	0.0488	0.0973	2	EPA 8270D Certifications:	09/19/2016 11:58 CTDOH,NELAC-NY10854,NJDEP,PADEP	09/20/2016 12:10	SR
86-73-7	Fluorene	ND		mg/kg dry	0.0488	0.0973	2	EPA 8270D Certifications:	09/19/2016 11:58 NELAC-NY10854,NJDEP,PADEP	09/20/2016 12:10	SR
193-39-5	Indeno(1,2,3-cd)pyrene	ND		mg/kg dry	0.0488	0.0973	2	EPA 8270D Certifications:	09/19/2016 11:58 CTDOH,NELAC-NY10854,NJDEP,PADEP	09/20/2016 12:10	SR
91-20-3	Naphthalene	ND		mg/kg dry	0.0488	0.0973	2	EPA 8270D Certifications:	09/19/2016 11:58 CTDOH,NELAC-NY10854,NJDEP,PADEP	09/20/2016 12:10	SR
85-01-8	Phenanthrene	ND		mg/kg dry	0.0488	0.0973	2	EPA 8270D Certifications:	09/19/2016 11:58 CTDOH,NELAC-NY10854,NJDEP,PADEP	09/20/2016 12:10	SR
129-00-0	Pyrene	ND		mg/kg dry	0.0488	0.0973	2	EPA 8270D Certifications:	09/19/2016 11:58 CTDOH,NELAC-NY10854,NJDEP,PADEP	09/20/2016 12:10	SR

	Surrogate Recoveries	Result	Acceptance Range
4165-60-0	*Surrogate: Nitrobenzene-d5*	*41.7 %*	*22-108*
321-60-8	*Surrogate: 2-Fluorobiphenyl*	*43.6 %*	*21-113*
1718-51-0	*Surrogate: Terphenyl-d14*	*35.6 %*	*24-116*

Polychlorinated Biphenyls (PCB)

Log-in Notes: **Sample Notes:**

Sample Prepared by Method: EPA 3550C

CAS No.	Parameter	Result	Flag	Units	LOD/MDL	Reported to LOQ	Dilution	Reference Method	Date/Time Prepared	Date/Time Analyzed	Analyst
12674-11-2	Aroclor 1016	ND		mg/kg dry	0.0194	0.0194	1	EPA 8082A Certifications:	09/20/2016 07:11 NELAC-NY10854,CTDOH,NJDEP,PADEP	09/20/2016 14:22	AMC
11104-28-2	Aroclor 1221	ND		mg/kg dry	0.0194	0.0194	1	EPA 8082A Certifications:	09/20/2016 07:11 NELAC-NY10854,CTDOH,NJDEP,PADEP	09/20/2016 14:22	AMC
11141-16-5	Aroclor 1232	ND		mg/kg dry	0.0194	0.0194	1	EPA 8082A Certifications:	09/20/2016 07:11 NELAC-NY10854,CTDOH,NJDEP,PADEP	09/20/2016 14:22	AMC

Sample Information

Client Sample ID: SB-18-Comp | **York Sample ID:** 16I0414-10

York Project (SDG) No.	Client Project ID	Matrix	Collection Date/Time	Date Received
16I0414	BEGS-Flatbush Ave Waterman Phase II 15-008-0265	Soil	September 12, 2016 10:10 am	09/13/2016

Polychlorinated Biphenyls (PCB)

Log-in Notes: **Sample Notes:**

Sample Prepared by Method: EPA 3550C

CAS No.	Parameter	Result	Flag	Units	LOD/MDL	Reported to LOQ	Dilution	Reference Method	Date/Time Prepared	Date/Time Analyzed	Analyst
53469-21-9	Aroclor 1242	ND		mg/kg dry	0.0194	0.0194	1	EPA 8082A Certifications: NELAC-NY10854,CTDOH,NJDEP,PADEP	09/20/2016 07:11	09/20/2016 14:22	AMC
12672-29-6	Aroclor 1248	ND		mg/kg dry	0.0194	0.0194	1	EPA 8082A Certifications: NELAC-NY10854,CTDOH,NJDEP,PADEP	09/20/2016 07:11	09/20/2016 14:22	AMC
11097-69-1	Aroclor 1254	ND		mg/kg dry	0.0194	0.0194	1	EPA 8082A Certifications: NELAC-NY10854,CTDOH,NJDEP,PADEP	09/20/2016 07:11	09/20/2016 14:22	AMC
11096-82-5	Aroclor 1260	ND		mg/kg dry	0.0194	0.0194	1	EPA 8082A Certifications: NELAC-NY10854,CTDOH,NJDEP,PADEP	09/20/2016 07:11	09/20/2016 14:22	AMC
1336-36-3	* Total PCBs	ND		mg/kg dry	0.0194	0.0194	1	EPA 8082A Certifications:	09/20/2016 07:11	09/20/2016 14:22	AMC

	Surrogate Recoveries	Result	Acceptance Range
877-09-8	*Surrogate: Tetrachloro-m-xylene*	*106 %*	*30-140*
2051-24-3	*Surrogate: Decachlorobiphenyl*	*113 %*	*30-140*

Total Petroleum Hydrocarbons-DRO (C10-C28)

Log-in Notes: **Sample Notes:**

Sample Prepared by Method: EPA 3550C

CAS No.	Parameter	Result	Flag	Units	LOD/MDL	Reported to LOQ	Dilution	Reference Method	Date/Time Prepared	Date/Time Analyzed	Analyst
	Total Petroleum Hydrocarbons-DRO	**60.7**		mg/kg dry	3.97	11.7	1	EPA 8015D Certifications: NELAC-NY10854,NJDEP,PADEP	09/19/2016 12:01	09/19/2016 19:58	AMC

	Surrogate Recoveries	Result	Acceptance Range
638-68-6	*Surrogate: Triacontane*	*82.4 %*	*30-150*

Total Petroleum Hydrocarbons-GRO (C5-C10)

Log-in Notes: **Sample Notes:** VOA-CONT

Sample Prepared by Method: EPA 5035A

CAS No.	Parameter	Result	Flag	Units	LOD/MDL	Reported to LOQ	Dilution	Reference Method	Date/Time Prepared	Date/Time Analyzed	Analyst
	Total Petroleum Hydrocarbons-GRO	ND		mg/kg dry	46.7	93.3	100	EPA 8015D Certifications: NELAC-NY10854,NJDEP,PADEP	09/19/2016 15:46	09/20/2016 02:45	OW

	Surrogate Recoveries	Result	Acceptance Range
460-00-4	*Surrogate: p-Bromofluorobenzene*	*101 %*	*70-130*

Metals, TCLP RCRA

Log-in Notes: **Sample Notes:**

Sample Prepared by Method: EPA 3015A/1311

CAS No.	Parameter	Result	Flag	Units	LOD/MDL	Reported to LOQ	Dilution	Reference Method	Date/Time Prepared	Date/Time Analyzed	Analyst
7440-38-2	Arsenic	ND		mg/L	0.004	0.004	1	EPA 6010C/1311 Certifications: CTDOH,NELAC-NY10854,NJDEP,PADEP	09/15/2016 11:37	09/16/2016 01:57	KV
7440-39-3	**Barium**	**0.212**		mg/L	0.011	0.011	1	EPA 6010C/1311 Certifications: CTDOH,NELAC-NY10854,NJDEP,PADEP	09/15/2016 11:37	09/16/2016 01:57	KV
[illegible]43-9	Cadmium	ND		mg/L	0.003	0.003	1	EPA 6010C/1311 Certifications: CTDOH,NELAC-NY10854,NJDEP,PADEP	09/15/2016 11:37	09/16/2016 01:57	KV

Sample Information

Client Sample ID: SB-18-Comp

York Sample ID: 16I0414-10

York Project (SDG) No.	Client Project ID	Matrix	Collection Date/Time	Date Received
16I0414	BEGS-Flatbush Ave Waterman Phase II 15-008-0265	Soil	September 12, 2016 10:10 am	09/13/2016

Metals, TCLP RCRA

Log-in Notes: **Sample Notes:**

Sample Prepared by Method: EPA 3015A/1311

CAS No.	Parameter	Result	Flag	Units	LOD/MDL	Reported to LOQ	Dilution	Reference Method	Date/Time Prepared	Date/Time Analyzed	Analyst
7440-47-3	Chromium	ND		mg/L	0.006	0.006	1	EPA 6010C/1311	09/15/2016 11:37	09/16/2016 01:57	KV
								Certifications: CTDOH,NELAC-NY10854,NJDEP,PADEP			
7439-92-1	**Lead**	**0.015**		mg/L	0.003	0.003	1	EPA 6010C/1311	09/15/2016 11:37	09/16/2016 01:57	KV
								Certifications: CTDOH,NELAC-NY10854,NJDEP,PADEP			
7782-49-2	Selenium	ND	M-SeTC	mg/L	0.011	0.011	1	EPA 6010C/1311	09/15/2016 11:37	09/16/2016 01:57	KV
								Certifications: CTDOH,NELAC-NY10854,NJDEP,PADEP			
7440-22-4	Silver	ND		mg/L	0.006	0.006	1	EPA 6010C/1311	09/15/2016 11:37	09/16/2016 01:57	KV
								Certifications: CTDOH,NELAC-NY10854,NJDEP,PADEP			

Mercury TCLP by 7473

Log-in Notes: **Sample Notes:**

Sample Prepared by Method: EPA 7473 water

CAS No.	Parameter	Result	Flag	Units	LOD/MDL	Reported to LOQ	Dilution	Reference Method	Date/Time Prepared	Date/Time Analyzed	Analyst
7439-97-6	Mercury	ND		mg/L	0.0000390	0.000200	1	EPA 7473/1311	09/16/2016 06:16	09/16/2016 14:16	ALD
								Certifications: CTDOH,NJDEP,PADEP,NELAC-NY10854			

Ignitability

Log-in Notes: **Sample Notes:**

Sample Prepared by Method: Analysis Preparation

CAS No.	Parameter	Result	Flag	Units	LOD/MDL	Reported to LOQ	Dilution	Reference Method	Date/Time Prepared	Date/Time Analyzed	Analyst
	* Ignitability	ND	U	-	1	1	1	EPA 1030P	09/17/2016 20:49	09/18/2016 02:11	AA
								Certifications: CTDOH,PADEP			

Total Solids

Log-in Notes: **Sample Notes:**

Sample Prepared by Method: % Solids Prep

CAS No.	Parameter	Result	Flag	Units	LOD/MDL	Reported to LOQ	Dilution	Reference Method	Date/Time Prepared	Date/Time Analyzed	Analyst
solids	*** % Solids**	**85.7**		%	0.100	0.100	1	SM 2540G	09/19/2016 07:35	09/19/2016 14:01	LAB
								Certifications: CTDOH			

Corrosivity

Log-in Notes: **Sample Notes:**

Sample Prepared by Method: Analysis Preparation

CAS No.	Parameter	Result	Flag	Units	LOD/MDL	Reported to LOQ	Dilution	Reference Method	Date/Time Prepared	Date/Time Analyzed	Analyst
	pH	**6.39**	HT-pH	pH units		0.500	1	EPA 9045D	09/20/2016 14:13	09/20/2016 16:22	DM1
								Certifications: NELAC-NY10854,CTDOH,PADEP			

Reactivity-Cyanide

Log-in Notes: **Sample Notes:**

Sample Prepared by Method: Analysis Preparation

CAS No.	Parameter	Result	Flag	Units	LOD/MDL	Reported to LOQ	Dilution	Reference Method	Date/Time Prepared	Date/Time Analyzed	Analyst
	* Reactivity - Cyanide	ND		mg/kg	0.250	0.250	1	EPA SW-846 Ch.7.3.3	09/20/2016 10:46	09/20/2016 14:00	AD
								Certifications: CTDOH,PADEP			

Sample Information

Client Sample ID: SB-18-Comp **York Sample ID:** 16I0414-10

York Project (SDG) No.	Client Project ID	Matrix	Collection Date/Time	Date Received
16I0414	BEGS-Flatbush Ave Waterman Phase II 15-008-0265	Soil	September 12, 2016 10:10 am	09/13/2016

Reactivity-Sulfide **Log-in Notes:** **Sample Notes:**

Sample Prepared by Method: Analysis Preparation

CAS No.	Parameter	Result	Flag	Units	LOD/MDL	Reported to LOQ	Dilution	Reference Method	Date/Time Prepared	Date/Time Analyzed	Analyst
	* Reactivity - Sulfide	40.0		mg/kg	15.0	15.0	1	EPA SW-846 Ch.7.3.4	09/20/2016 10:47	09/20/2016 14:02	AD
								Certifications: CTDOH,PADEP			

TCLP Extraction for METALS EPA 1311 **Log-in Notes:** **Sample Notes:**

Sample Prepared by Method: EPA SW 846-1311 TCLP ext. for metals

CAS No.	Parameter	Result	Flag	Units	LOD/MDL	Reported to LOQ	Dilution	Reference Method	Date/Time Prepared	Date/Time Analyzed	Analyst
	TCLP Extraction	Completed		N/A	1.00	1.00	1	EPA 1311	09/14/2016 19:15	09/15/2016 12:18	TJM
								Certifications: NELAC-NY10854,CTDOH,NJDEP,PADEP			

Sample Information

Client Sample ID: SB-12-14.5-15.0' **York Sample ID:** 16I0414-11

York Project (SDG) No.	Client Project ID	Matrix	Collection Date/Time	Date Received
16I0414	BEGS-Flatbush Ave Waterman Phase II 15-008-0265	Soil	September 9, 2016 12:45 pm	09/13/2016

Volatile Organics, 8260 - Comprehensive **Log-in Notes:** VOA-CONT **Sample Notes:** VOA-CONT

Sample Prepared by Method: EPA 5035A

CAS No.	Parameter	Result	Flag	Units	Reported to LOD/MDL	LOQ	Dilution	Reference Method	Date/Time Prepared	Date/Time Analyzed	Analyst
630-20-6	1,1,1,2-Tetrachloroethane	ND		mg/kg dry	0.0026	0.0052	1	EPA 8260C	09/19/2016 17:34	09/19/2016 22:49	SS
								Certifications: CTDOH,NELAC-NY10854,NJDEP			
71-55-6	1,1,1-Trichloroethane	ND		mg/kg dry	0.0026	0.0052	1	EPA 8260C	09/19/2016 17:34	09/19/2016 22:49	SS
								Certifications: CTDOH,NELAC-NY10854,NJDEP,PADEP			
79-34-5	1,1,2,2-Tetrachloroethane	ND		mg/kg dry	0.0026	0.0052	1	EPA 8260C	09/19/2016 17:34	09/19/2016 22:49	SS
								Certifications: CTDOH,NELAC-NY10854,NJDEP,PADEP			
76-13-1	1,1,2-Trichloro-1,2,2-trifluoroethane (Freon 113)	ND		mg/kg dry	0.0026	0.0052	1	EPA 8260C	09/19/2016 17:34	09/19/2016 22:49	SS
								Certifications: CTDOH,NELAC-NY10854,NJDEP			
79-00-5	1,1,2-Trichloroethane	ND		mg/kg dry	0.0026	0.0052	1	EPA 8260C	09/19/2016 17:34	09/19/2016 22:49	SS
								Certifications: CTDOH,NELAC-NY10854,NJDEP,PADEP			
75-34-3	1,1-Dichloroethane	ND		mg/kg dry	0.0026	0.0052	1	EPA 8260C	09/19/2016 17:34	09/19/2016 22:49	SS
								Certifications: CTDOH,NELAC-NY10854,NJDEP,PADEP			
75-35-4	1,1-Dichloroethylene	ND		mg/kg dry	0.0026	0.0052	1	EPA 8260C	09/19/2016 17:34	09/19/2016 22:49	SS
								Certifications: CTDOH,NELAC-NY10854,NJDEP,PADEP			
87-61-6	1,2,3-Trichlorobenzene	ND		mg/kg dry	0.0026	0.0052	1	EPA 8260C	09/19/2016 17:34	09/19/2016 22:49	SS
								Certifications: NELAC-NY10854,NJDEP			
96-18-4	1,2,3-Trichloropropane	ND		mg/kg dry	0.0026	0.0052	1	EPA 8260C	09/19/2016 17:34	09/19/2016 22:49	SS
								Certifications: NELAC-NY10854,NJDEP			
120-82-1	1,2,4-Trichlorobenzene	ND		mg/kg dry	0.0026	0.0052	1	EPA 8260C	09/19/2016 17:34	09/19/2016 22:49	SS
								Certifications: NELAC-NY10854,NJDEP			
[illegible]-6	1,2,4-Trimethylbenzene	ND		mg/kg dry	0.0026	0.0052	1	EPA 8260C	09/19/2016 17:34	09/19/2016 22:49	SS
								Certifications: CTDOH,NELAC-NY10854,NJDEP			

Sample Information

Client Sample ID: SB-12-14.5-15.0'

York Sample ID: 16I0414-11

York Project (SDG) No.	Client Project ID	Matrix	Collection Date/Time	Date Received
16I0414	BEGS-Flatbush Ave Waterman Phase II 15-008-0265	Soil	September 9, 2016 12:45 pm	09/13/2016

Volatile Organics, 8260 - Comprehensive

Log-in Notes: VOA-CONT **Sample Notes:** VOA-CONT

Sample Prepared by Method: EPA 5035A

CAS No.	Parameter	Result	Flag	Units	Reported to LOD/MDL	LOQ	Dilution	Reference Method	Date/Time Prepared	Date/Time Analyzed	Analyst
96-12-8	1,2-Dibromo-3-chloropropane	ND		mg/kg dry	0.0026	0.0052	1	EPA 8260C Certifications: CTDOH,NELAC-NY10854,NJDEP	09/19/2016 17:34	09/19/2016 22:49	SS
106-93-4	1,2-Dibromoethane	ND		mg/kg dry	0.0026	0.0052	1	EPA 8260C Certifications: CTDOH,NELAC-NY10854,NJDEP	09/19/2016 17:34	09/19/2016 22:49	SS
95-50-1	1,2-Dichlorobenzene	ND		mg/kg dry	0.0026	0.0052	1	EPA 8260C Certifications: CTDOH,NELAC-NY10854,NJDEP,PADEP	09/19/2016 17:34	09/19/2016 22:49	SS
107-06-2	1,2-Dichloroethane	ND		mg/kg dry	0.0026	0.0052	1	EPA 8260C Certifications: CTDOH,NELAC-NY10854,NJDEP,PADEP	09/19/2016 17:34	09/19/2016 22:49	SS
78-87-5	1,2-Dichloropropane	ND		mg/kg dry	0.0026	0.0052	1	EPA 8260C Certifications: CTDOH,NELAC-NY10854,NJDEP	09/19/2016 17:34	09/19/2016 22:49	SS
108-67-8	1,3,5-Trimethylbenzene	ND		mg/kg dry	0.0026	0.0052	1	EPA 8260C Certifications: CTDOH,NELAC-NY10854,NJDEP	09/19/2016 17:34	09/19/2016 22:49	SS
541-73-1	1,3-Dichlorobenzene	ND		mg/kg dry	0.0026	0.0052	1	EPA 8260C Certifications: CTDOH,NELAC-NY10854,NJDEP,PADEP	09/19/2016 17:34	09/19/2016 22:49	SS
106-46-7	1,4-Dichlorobenzene	ND		mg/kg dry	0.0026	0.0052	1	EPA 8260C Certifications: CTDOH,NELAC-NY10854,NJDEP,PADEP	09/19/2016 17:34	09/19/2016 22:49	SS
123-91-1	1,4-Dioxane	ND		mg/kg dry	0.052	0.10	1	EPA 8260C Certifications: NELAC-NY10854,NJDEP	09/19/2016 17:34	09/19/2016 22:49	SS
78-93-3	2-Butanone	ND		mg/kg dry	0.0026	0.0052	1	EPA 8260C Certifications: CTDOH,NELAC-NY10854,NJDEP	09/19/2016 17:34	09/19/2016 22:49	SS
591-78-6	2-Hexanone	ND		mg/kg dry	0.0026	0.0052	1	EPA 8260C Certifications: CTDOH,NELAC-NY10854,NJDEP	09/19/2016 17:34	09/19/2016 22:49	SS
108-10-1	4-Methyl-2-pentanone	ND		mg/kg dry	0.0026	0.0052	1	EPA 8260C Certifications: CTDOH,NELAC-NY10854,NJDEP	09/19/2016 17:34	09/19/2016 22:49	SS
67-64-1	Acetone	ND		mg/kg dry	0.0052	0.010	1	EPA 8260C Certifications: CTDOH,NELAC-NY10854,NJDEP	09/19/2016 17:34	09/19/2016 22:49	SS
107-02-8	Acrolein	ND		mg/kg dry	0.0052	0.010	1	EPA 8260C Certifications: CTDOH,NELAC-NY10854,NJDEP	09/19/2016 17:34	09/19/2016 22:49	SS
107-13-1	Acrylonitrile	ND		mg/kg dry	0.0026	0.0052	1	EPA 8260C Certifications: CTDOH,NELAC-NY10854,NJDEP	09/19/2016 17:34	09/19/2016 22:49	SS
71-43-2	Benzene	ND		mg/kg dry	0.0026	0.0052	1	EPA 8260C Certifications: CTDOH,NELAC-NY10854,NJDEP,PADEP	09/19/2016 17:34	09/19/2016 22:49	SS
74-97-5	Bromochloromethane	ND		mg/kg dry	0.0026	0.0052	1	EPA 8260C Certifications: NELAC-NY10854,NJDEP	09/19/2016 17:34	09/19/2016 22:49	SS
75-27-4	Bromodichloromethane	ND		mg/kg dry	0.0026	0.0052	1	EPA 8260C Certifications: CTDOH,NELAC-NY10854,NJDEP,PADEP	09/19/2016 17:34	09/19/2016 22:49	SS
75-25-2	Bromoform	ND		mg/kg dry	0.0026	0.0052	1	EPA 8260C Certifications: CTDOH,NELAC-NY10854,NJDEP,PADEP	09/19/2016 17:34	09/19/2016 22:49	SS
74-83-9	Bromomethane	ND		mg/kg dry	0.0026	0.0052	1	EPA 8260C Certifications: CTDOH,NELAC-NY10854,NJDEP,PADEP	09/19/2016 17:34	09/19/2016 22:49	SS
75-15-0	Carbon disulfide	ND		mg/kg dry	0.0026	0.0052	1	EPA 8260C Certifications: CTDOH,NELAC-NY10854,NJDEP	09/19/2016 17:34	09/19/2016 22:49	SS
56-23-5	Carbon tetrachloride	ND		mg/kg dry	0.0026	0.0052	1	EPA 8260C Certifications: CTDOH,NELAC-NY10854,NJDEP,PADEP	09/19/2016 17:34	09/19/2016 22:49	SS

Sample Information

Client Sample ID: SB-12-14.5-15.0'

York Sample ID: 16I0414-11

York Project (SDG) No.	Client Project ID	Matrix	Collection Date/Time	Date Received
16I0414	BEGS-Flatbush Ave Waterman Phase II 15-008-0265	Soil	September 9, 2016 12:45 pm	09/13/2016

Volatile Organics, 8260 - Comprehensive

Log-in Notes: VOA-CONT **Sample Notes:** VOA-CONT

Sample Prepared by Method: EPA 5035A

CAS No.	Parameter	Result	Flag	Units	Reported to LOD/MDL	LOQ	Dilution	Reference Method	Date/Time Prepared	Date/Time Analyzed	Analyst
108-90-7	Chlorobenzene	ND		mg/kg dry	0.0026	0.0052	1	EPA 8260C Certifications: CTDOH,NELAC-NY10854,NJDEP,PADEP	09/19/2016 17:34	09/19/2016 22:49	SS
75-00-3	Chloroethane	ND		mg/kg dry	0.0026	0.0052	1	EPA 8260C Certifications: CTDOH,NELAC-NY10854,NJDEP,PADEP	09/19/2016 17:34	09/19/2016 22:49	SS
67-66-3	Chloroform	ND		mg/kg dry	0.0026	0.0052	1	EPA 8260C Certifications: CTDOH,NELAC-NY10854,NJDEP,PADEP	09/19/2016 17:34	09/19/2016 22:49	SS
74-87-3	Chloromethane	ND		mg/kg dry	0.0026	0.0052	1	EPA 8260C Certifications: CTDOH,NELAC-NY10854,NJDEP,PADEP	09/19/2016 17:34	09/19/2016 22:49	SS
156-59-2	cis-1,2-Dichloroethylene	ND		mg/kg dry	0.0026	0.0052	1	EPA 8260C Certifications: CTDOH,NELAC-NY10854,NJDEP	09/19/2016 17:34	09/19/2016 22:49	SS
10061-01-5	cis-1,3-Dichloropropylene	ND		mg/kg dry	0.0026	0.0052	1	EPA 8260C Certifications: CTDOH,NELAC-NY10854,NJDEP,PADEP	09/19/2016 17:34	09/19/2016 22:49	SS
110-82-7	Cyclohexane	ND		mg/kg dry	0.0026	0.0052	1	EPA 8260C Certifications: NELAC-NY10854,NJDEP	09/19/2016 17:34	09/19/2016 22:49	SS
[illegible]8-1	Dibromochloromethane	ND		mg/kg dry	0.0026	0.0052	1	EPA 8260C Certifications: NELAC-NY10854,NJDEP,PADEP	09/19/2016 17:34	09/19/2016 22:49	SS
74-95-3	Dibromomethane	ND		mg/kg dry	0.0026	0.0052	1	EPA 8260C Certifications: NELAC-NY10854,NJDEP	09/19/2016 17:34	09/19/2016 22:49	SS
75-71-8	Dichlorodifluoromethane	ND		mg/kg dry	0.0026	0.0052	1	EPA 8260C Certifications: NELAC-NY10854,NJDEP	09/19/2016 17:34	09/19/2016 22:49	SS
100-41-4	Ethyl Benzene	ND		mg/kg dry	0.0026	0.0052	1	EPA 8260C Certifications: CTDOH,NELAC-NY10854,NJDEP,PADEP	09/19/2016 17:34	09/19/2016 22:49	SS
87-68-3	Hexachlorobutadiene	ND		mg/kg dry	0.0026	0.0052	1	EPA 8260C Certifications: NELAC-NY10854,NJDEP	09/19/2016 17:34	09/19/2016 22:49	SS
98-82-8	Isopropylbenzene	ND		mg/kg dry	0.0026	0.0052	1	EPA 8260C Certifications: CTDOH,NELAC-NY10854,NJDEP	09/19/2016 17:34	09/19/2016 22:49	SS
79-20-9	Methyl acetate	ND		mg/kg dry	0.0026	0.0052	1	EPA 8260C Certifications: NELAC-NY10854,NJDEP	09/19/2016 17:34	09/19/2016 22:49	SS
1634-04-4	Methyl tert-butyl ether (MTBE)	ND		mg/kg dry	0.0026	0.0052	1	EPA 8260C Certifications: CTDOH,NELAC-NY10854,NJDEP	09/19/2016 17:34	09/19/2016 22:49	SS
108-87-2	Methylcyclohexane	ND		mg/kg dry	0.0026	0.0052	1	EPA 8260C Certifications: NELAC-NY10854,NJDEP	09/19/2016 17:34	09/19/2016 22:49	SS
75-09-2	**Methylene chloride**	**0.0079**	J	mg/kg dry	0.0052	0.010	1	EPA 8260C Certifications: CTDOH,NELAC-NY10854,NJDEP,PADEP	09/19/2016 17:34	09/19/2016 22:49	SS
104-51-8	n-Butylbenzene	ND		mg/kg dry	0.0026	0.0052	1	EPA 8260C Certifications: CTDOH,NELAC-NY10854,NJDEP	09/19/2016 17:34	09/19/2016 22:49	SS
103-65-1	n-Propylbenzene	ND		mg/kg dry	0.0026	0.0052	1	EPA 8260C Certifications: CTDOH,NELAC-NY10854,NJDEP	09/19/2016 17:34	09/19/2016 22:49	SS
95-47-6	o-Xylene	ND		mg/kg dry	0.0026	0.0052	1	EPA 8260C Certifications: CTDOH,NELAC-NY10854	09/19/2016 17:34	09/19/2016 22:49	SS
179601-23-1	p- & m- Xylenes	ND		mg/kg dry	0.0052	0.010	1	EPA 8260C Certifications: CTDOH,NELAC-NY10854	09/19/2016 17:34	09/19/2016 22:49	SS
[illegible]6	p-Isopropyltoluene	ND		mg/kg dry	0.0026	0.0052	1	EPA 8260C Certifications: CTDOH,NELAC-NY10854,NJDEP	09/19/2016 17:34	09/19/2016 22:49	SS

Sample Information

Client Sample ID: SB-12-14.5-15.0' **York Sample ID:** 16I0414-11

York Project (SDG) No.	Client Project ID	Matrix	Collection Date/Time	Date Received
16I0414	BEGS-Flatbush Ave Waterman Phase II 15-008-0265	Soil	September 9, 2016 12:45 pm	09/13/2016

Volatile Organics, 8260 - Comprehensive **Log-in Notes:** VOA-CONT **Sample Notes:** VOA-CONT

Sample Prepared by Method: EPA 5035A

CAS No.	Parameter	Result	Flag	Units	Reported to LOD/MDL	LOQ	Dilution	Reference Method	Date/Time Prepared	Date/Time Analyzed	Analyst
135-98-8	sec-Butylbenzene	ND		mg/kg dry	0.0026	0.0052	1	EPA 8260C Certifications: CTDOH,NELAC-NY10854,NJDEP	09/19/2016 17:34	09/19/2016 22:49	SS
100-42-5	Styrene	ND		mg/kg dry	0.0026	0.0052	1	EPA 8260C Certifications: CTDOH,NELAC-NY10854,NJDEP	09/19/2016 17:34	09/19/2016 22:49	SS
75-65-0	tert-Butyl alcohol (TBA)	ND		mg/kg dry	0.0026	0.0052	1	EPA 8260C Certifications: NELAC-NY10854,NJDEP	09/19/2016 17:34	09/19/2016 22:49	SS
98-06-6	tert-Butylbenzene	ND		mg/kg dry	0.0026	0.0052	1	EPA 8260C Certifications: CTDOH,NELAC-NY10854,NJDEP	09/19/2016 17:34	09/19/2016 22:49	SS
127-18-4	Tetrachloroethylene	ND		mg/kg dry	0.0026	0.0052	1	EPA 8260C Certifications: CTDOH,NELAC-NY10854,NJDEP,PADEP	09/19/2016 17:34	09/19/2016 22:49	SS
108-88-3	Toluene	ND		mg/kg dry	0.0026	0.0052	1	EPA 8260C Certifications: CTDOH,NELAC-NY10854,NJDEP,PADEP	09/19/2016 17:34	09/19/2016 22:49	SS
156-60-5	trans-1,2-Dichloroethylene	ND		mg/kg dry	0.0026	0.0052	1	EPA 8260C Certifications: CTDOH,NELAC-NY10854,NJDEP	09/19/2016 17:34	09/19/2016 22:49	SS
10061-02-6	trans-1,3-Dichloropropylene	ND		mg/kg dry	0.0026	0.0052	1	EPA 8260C Certifications: CTDOH,NELAC-NY10854,NJDEP,PADEP	09/19/2016 17:34	09/19/2016 22:49	SS
79-01-6	Trichloroethylene	ND		mg/kg dry	0.0026	0.0052	1	EPA 8260C Certifications: CTDOH,NELAC-NY10854,NJDEP,PADEP	09/19/2016 17:34	09/19/2016 22:49	SS
75-69-4	Trichlorofluoromethane	ND		mg/kg dry	0.0026	0.0052	1	EPA 8260C Certifications: CTDOH,NELAC-NY10854,NJDEP,PADEP	09/19/2016 17:34	09/19/2016 22:49	SS
75-01-4	Vinyl Chloride	ND		mg/kg dry	0.0026	0.0052	1	EPA 8260C Certifications: CTDOH,NELAC-NY10854,NJDEP,PADEP	09/19/2016 17:34	09/19/2016 22:49	SS
1330-20-7	Xylenes, Total	ND		mg/kg dry	0.0078	0.016	1	EPA 8260C Certifications: CTDOH,NELAC-NY10854,NJDEP,PADEP	09/19/2016 17:34	09/19/2016 22:49	SS

	Surrogate Recoveries	Result	Acceptance Range
17060-07-0	*Surrogate: 1,2-Dichloroethane-d4*	*104 %*	*77-125*
2037-26-5	*Surrogate: Toluene-d8*	*96.3 %*	*85-120*
460-00-4	*Surrogate: p-Bromofluorobenzene*	*95.7 %*	*76-130*

Total Solids **Log-in Notes:** VOA-CONT **Sample Notes:**

Sample Prepared by Method: % Solids Prep

CAS No.	Parameter	Result	Flag	Units	LOD/MDL	Reported to LOQ	Dilution	Reference Method	Date/Time Prepared	Date/Time Analyzed	Analyst
solids	*** % Solids**	**96.4**		%	0.100	0.100	1	SM 2540G Certifications: CTDOH	09/19/2016 14:18	09/20/2016 08:04	LAB

Sample Information

Client Sample ID: SB-12-Comp **York Sample ID:** 16I0414-12

York Project (SDG) No.	Client Project ID	Matrix	Collection Date/Time	Date Recei
16I0414	BEGS-Flatbush Ave Waterman Phase II 15-008-0265	Soil	September 9, 2016 12:50 pm	09/13/2

Sample Information

Client Sample ID: SB-12-Comp

York Sample ID: 16I0414-12

York Project (SDG) No.	Client Project ID	Matrix	Collection Date/Time	Date Received
16I0414	BEGS-Flatbush Ave Waterman Phase II 15-008-0265	Soil	September 9, 2016 12:50 pm	09/13/2016

Semi-Volatiles, PAH Target List

Log-in Notes:

Sample Notes:

Sample Prepared by Method: EPA 3550C

CAS No.	Parameter	Result	Flag	Units	Reported to LOD/MDL	LOQ	Dilution	Reference Method	Date/Time Prepared	Date/Time Analyzed	Analyst
91-57-6	2-Methylnaphthalene	ND		mg/kg dry	0.0438	0.0873	2	EPA 8270D Certifications: CTDOH,NELAC-NY10854,NJDEP,PADEP	09/19/2016 11:58	09/20/2016 12:42	SR
83-32-9	Acenaphthene	ND		mg/kg dry	0.0438	0.0873	2	EPA 8270D Certifications: CTDOH,NELAC-NY10854,NJDEP,PADEP	09/19/2016 11:58	09/20/2016 12:42	SR
208-96-8	Acenaphthylene	ND		mg/kg dry	0.0438	0.0873	2	EPA 8270D Certifications: CTDOH,NELAC-NY10854,NJDEP,PADEP	09/19/2016 11:58	09/20/2016 12:42	SR
120-12-7	Anthracene	ND		mg/kg dry	0.0438	0.0873	2	EPA 8270D Certifications: CTDOH,NELAC-NY10854,NJDEP,PADEP	09/19/2016 11:58	09/20/2016 12:42	SR
56-55-3	Benzo(a)anthracene	ND		mg/kg dry	0.0438	0.0873	2	EPA 8270D Certifications: CTDOH,NELAC-NY10854,NJDEP,PADEP	09/19/2016 11:58	09/20/2016 12:42	SR
50-32-8	Benzo(a)pyrene	ND		mg/kg dry	0.0438	0.0873	2	EPA 8270D Certifications: CTDOH,NELAC-NY10854,NJDEP,PADEP	09/19/2016 11:58	09/20/2016 12:42	SR
205-99-2	Benzo(b)fluoranthene	ND		mg/kg dry	0.0438	0.0873	2	EPA 8270D Certifications: CTDOH,NELAC-NY10854,NJDEP,PADEP	09/19/2016 11:58	09/20/2016 12:42	SR
191-24-2	Benzo(g,h,i)perylene	ND		mg/kg dry	0.0438	0.0873	2	EPA 8270D Certifications: CTDOH,NELAC-NY10854,NJDEP,PADEP	09/19/2016 11:58	09/20/2016 12:42	SR
207-08-9	Benzo(k)fluoranthene	ND		mg/kg dry	0.0438	0.0873	2	EPA 8270D Certifications: CTDOH,NELAC-NY10854,NJDEP,PADEP	09/19/2016 11:58	09/20/2016 12:42	SR
218-01-9	Chrysene	ND		mg/kg dry	0.0438	0.0873	2	EPA 8270D Certifications: CTDOH,NELAC-NY10854,NJDEP,PADEP	09/19/2016 11:58	09/20/2016 12:42	SR
53-70-3	Dibenzo(a,h)anthracene	ND		mg/kg dry	0.0438	0.0873	2	EPA 8270D Certifications: CTDOH,NELAC-NY10854,NJDEP,PADEP	09/19/2016 11:58	09/20/2016 12:42	SR
206-44-0	Fluoranthene	ND		mg/kg dry	0.0438	0.0873	2	EPA 8270D Certifications: CTDOH,NELAC-NY10854,NJDEP,PADEP	09/19/2016 11:58	09/20/2016 12:42	SR
86-73-7	Fluorene	ND		mg/kg dry	0.0438	0.0873	2	EPA 8270D Certifications: NELAC-NY10854,NJDEP,PADEP	09/19/2016 11:58	09/20/2016 12:42	SR
193-39-5	Indeno(1,2,3-cd)pyrene	ND		mg/kg dry	0.0438	0.0873	2	EPA 8270D Certifications: CTDOH,NELAC-NY10854,NJDEP,PADEP	09/19/2016 11:58	09/20/2016 12:42	SR
91-20-3	Naphthalene	ND		mg/kg dry	0.0438	0.0873	2	EPA 8270D Certifications: CTDOH,NELAC-NY10854,NJDEP,PADEP	09/19/2016 11:58	09/20/2016 12:42	SR
85-01-8	Phenanthrene	ND		mg/kg dry	0.0438	0.0873	2	EPA 8270D Certifications: CTDOH,NELAC-NY10854,NJDEP,PADEP	09/19/2016 11:58	09/20/2016 12:42	SR
129-00-0	Pyrene	ND		mg/kg dry	0.0438	0.0873	2	EPA 8270D Certifications: CTDOH,NELAC-NY10854,NJDEP,PADEP	09/19/2016 11:58	09/20/2016 12:42	SR

	Surrogate Recoveries	Result	Acceptance Range
4165-60-0	*Surrogate: Nitrobenzene-d5*	*33.9 %*	*22-108*
321-60-8	*Surrogate: 2-Fluorobiphenyl*	*36.8 %*	*21-113*
1718-51-0	*Surrogate: Terphenyl-d14*	*40.0 %*	*24-116*

ychlorinated Biphenyls (PCB)

Log-in Notes:

Sample Notes:

Sample Information

Client Sample ID: SB-12-Comp

York Sample ID: 16I0414-12

York Project (SDG) No.	Client Project ID	Matrix	Collection Date/Time	Date Received
16I0414	BEGS-Flatbush Ave Waterman Phase II 15-008-0265	Soil	September 9, 2016 12:50 pm	09/13/2016

Sample Prepared by Method: EPA 3550C

CAS No.	Parameter	Result	Flag	Units	LOD/MDL	Reported to LOQ	Dilution	Reference Method	Date/Time Prepared	Date/Time Analyzed	Analyst
12674-11-2	Aroclor 1016	ND		mg/kg dry	0.0174	0.0174	1	EPA 8082A	09/20/2016 07:11	09/20/2016 14:36	AMC
								Certifications: NELAC-NY10854,CTDOH,NJDEP,PADEP			
11104-28-2	Aroclor 1221	ND		mg/kg dry	0.0174	0.0174	1	EPA 8082A	09/20/2016 07:11	09/20/2016 14:36	AMC
								Certifications: NELAC-NY10854,CTDOH,NJDEP,PADEP			
11141-16-5	Aroclor 1232	ND		mg/kg dry	0.0174	0.0174	1	EPA 8082A	09/20/2016 07:11	09/20/2016 14:36	AMC
								Certifications: NELAC-NY10854,CTDOH,NJDEP,PADEP			
53469-21-9	Aroclor 1242	ND		mg/kg dry	0.0174	0.0174	1	EPA 8082A	09/20/2016 07:11	09/20/2016 14:36	AMC
								Certifications: NELAC-NY10854,CTDOH,NJDEP,PADEP			
12672-29-6	Aroclor 1248	ND		mg/kg dry	0.0174	0.0174	1	EPA 8082A	09/20/2016 07:11	09/20/2016 14:36	AMC
								Certifications: NELAC-NY10854,CTDOH,NJDEP,PADEP			
11097-69-1	Aroclor 1254	ND		mg/kg dry	0.0174	0.0174	1	EPA 8082A	09/20/2016 07:11	09/20/2016 14:36	AMC
								Certifications: NELAC-NY10854,CTDOH,NJDEP,PADEP			
11096-82-5	Aroclor 1260	ND		mg/kg dry	0.0174	0.0174	1	EPA 8082A	09/20/2016 07:11	09/20/2016 14:36	AMC
								Certifications: NELAC-NY10854,CTDOH,NJDEP,PADEP			
1336-36-3	* Total PCBs	ND		mg/kg dry	0.0174	0.0174	1	EPA 8082A	09/20/2016 07:11	09/20/2016 14:36	AMC
								Certifications:			

	Surrogate Recoveries	Result	Acceptance Range
877-09-8	*Surrogate: Tetrachloro-m-xylene*	*99.5 %*	*30-140*
2051-24-3	*Surrogate: Decachlorobiphenyl*	*101 %*	*30-140*

Total Petroleum Hydrocarbons-DRO (C10-C28)

Log-in Notes:

Sample Notes:

Sample Prepared by Method: EPA 3550C

CAS No.	Parameter	Result	Flag	Units	LOD/MDL	Reported to LOQ	Dilution	Reference Method	Date/Time Prepared	Date/Time Analyzed	Analyst
	Total Petroleum Hydrocarbons-DRO	**47.1**		mg/kg dry	3.56	10.5	1	EPA 8015D	09/19/2016 12:01	09/19/2016 20:28	AMC
								Certifications: NELAC-NY10854,NJDEP,PADEP			

	Surrogate Recoveries	Result	Acceptance Range
638-68-6	*Surrogate: Triacontane*	*82.4 %*	*30-150*

Total Petroleum Hydrocarbons-GRO (C5-C10)

Log-in Notes:

Sample Notes: VOA-CONT

Sample Prepared by Method: EPA 5035A

CAS No.	Parameter	Result	Flag	Units	LOD/MDL	Reported to LOQ	Dilution	Reference Method	Date/Time Prepared	Date/Time Analyzed	Analyst
	Total Petroleum Hydrocarbons-GRO	ND		mg/kg dry	41.9	83.8	100	EPA 8015D	09/19/2016 15:46	09/20/2016 03:23	OW
								Certifications: NELAC-NY10854,NJDEP,PADEP			

	Surrogate Recoveries	Result	Acceptance Range
460-00-4	*Surrogate: p-Bromofluorobenzene*	*101 %*	*70-130*

Metals, TCLP RCRA

Log-in Notes:

Sample Notes:

Sample Prepared by Method: EPA 3015A/1311

CAS No.	Parameter	Result	Flag	Units	LOD/MDL	Reported to LOQ	Dilution	Reference Method	Date/Time Prepared	Date/Time Analyzed	Analyst

Sample Information

Client Sample ID: SB-12-Comp

York Sample ID: 16I0414-12

York Project (SDG) No.	Client Project ID	Matrix	Collection Date/Time	Date Received
16I0414	BEGS-Flatbush Ave Waterman Phase II 15-008-0265	Soil	September 9, 2016 12:50 pm	09/13/2016

Metals, TCLP RCRA

Log-in Notes: **Sample Notes:**

Sample Prepared by Method: EPA 3015A/1311

CAS No.	Parameter	Result	Flag	Units	LOD/MDL	Reported to LOQ	Dilution	Reference Method	Date/Time Prepared	Date/Time Analyzed	Analyst
7440-38-2	Arsenic	ND		mg/L	0.004	0.004	1	EPA 6010C/1311	09/16/2016 11:59	09/17/2016 02:05	ALD
								Certifications: CTDOH,NELAC-NY10854,NJDEP,PADEP			
7440-39-3	**Barium**	**0.289**		mg/L	0.011	0.011	1	EPA 6010C/1311	09/16/2016 11:59	09/17/2016 02:05	ALD
								Certifications: CTDOH,NELAC-NY10854,NJDEP,PADEP			
7440-43-9	Cadmium	ND		mg/L	0.003	0.003	1	EPA 6010C/1311	09/16/2016 11:59	09/17/2016 02:05	ALD
								Certifications: CTDOH,NELAC-NY10854,NJDEP,PADEP			
7440-47-3	**Chromium**	**0.012**		mg/L	0.006	0.006	1	EPA 6010C/1311	09/16/2016 11:59	09/17/2016 02:05	ALD
								Certifications: CTDOH,NELAC-NY10854,NJDEP,PADEP			
7439-92-1	**Lead**	**0.030**		mg/L	0.003	0.003	1	EPA 6010C/1311	09/16/2016 11:59	09/17/2016 02:05	ALD
								Certifications: CTDOH,NELAC-NY10854,NJDEP,PADEP			
7782-49-2	**Selenium**	**0.019**	M-SeTC	mg/L	0.011	0.011	1	EPA 6010C/1311	09/16/2016 11:59	09/17/2016 02:05	ALD
								Certifications: CTDOH,NELAC-NY10854,NJDEP,PADEP			
7440-22-4	Silver	ND		mg/L	0.006	0.006	1	EPA 6010C/1311	09/16/2016 11:59	09/17/2016 02:05	ALD
								Certifications: CTDOH,NELAC-NY10854,NJDEP,PADEP			

Mercury TCLP by 7473

Log-in Notes: **Sample Notes:**

Sample Prepared by Method: EPA 7473 water

CAS No.	Parameter	Result	Flag	Units	LOD/MDL	Reported to LOQ	Dilution	Reference Method	Date/Time Prepared	Date/Time Analyzed	Analyst
7439-97-6	Mercury	ND		mg/L	0.0000390	0.000200	1	EPA 7473/1311	09/16/2016 06:16	09/16/2016 14:16	ALD
								Certifications: CTDOH,NJDEP,PADEP,NELAC-NY10854			

Ignitability

Log-in Notes: **Sample Notes:**

Sample Prepared by Method: Analysis Preparation

CAS No.	Parameter	Result	Flag	Units	LOD/MDL	Reported to LOQ	Dilution	Reference Method	Date/Time Prepared	Date/Time Analyzed	Analyst
	* Ignitability	ND	U	-	1	1	1	EPA 1030P	09/17/2016 20:49	09/18/2016 02:11	AA
								Certifications: CTDOH,PADEP			

Total Solids

Log-in Notes: **Sample Notes:**

Sample Prepared by Method: % Solids Prep

CAS No.	Parameter	Result	Flag	Units	LOD/MDL	Reported to LOQ	Dilution	Reference Method	Date/Time Prepared	Date/Time Analyzed	Analyst
solids	*** % Solids**	**95.5**		%	0.100	0.100	1	SM 2540G	09/19/2016 07:35	09/19/2016 14:01	LAB
								Certifications: CTDOH			

Corrosivity

Log-in Notes: **Sample Notes:**

Sample Prepared by Method: Analysis Preparation

CAS No.	Parameter	Result	Flag	Units	LOD/MDL	Reported to LOQ	Dilution	Reference Method	Date/Time Prepared	Date/Time Analyzed	Analyst
	pH	**6.75**	HT-pH	pH units		0.500	1	EPA 9045D	09/20/2016 14:13	09/20/2016 16:22	DM1
								Certifications: NELAC-NY10854,CTDOH,PADEP			

Sample Information

Client Sample ID: SB-12-Comp **York Sample ID:** 16I0414-12

York Project (SDG) No.	Client Project ID	Matrix	Collection Date/Time	Date Received
16I0414	BEGS-Flatbush Ave Waterman Phase II 15-008-0265	Soil	September 9, 2016 12:50 pm	09/13/2016

Reactivity-Cyanide

Log-in Notes: **Sample Notes:**

Sample Prepared by Method: Analysis Preparation

CAS No.	Parameter	Result	Flag	Units	LOD/MDL	Reported to LOQ	Dilution	Reference Method	Date/Time Prepared	Date/Time Analyzed	Analyst
	* Reactivity - Cyanide	ND		mg/kg	0.250	0.250	1	EPA SW-846 Ch.7.3.3	09/20/2016 10:46	09/20/2016 14:00	AD
								Certifications: CTDOH,PADEP			

Reactivity-Sulfide

Log-in Notes: **Sample Notes:**

Sample Prepared by Method: Analysis Preparation

CAS No.	Parameter	Result	Flag	Units	LOD/MDL	Reported to LOQ	Dilution	Reference Method	Date/Time Prepared	Date/Time Analyzed	Analyst
	*** Reactivity - Sulfide**	**40.0**		mg/kg	15.0	15.0	1	EPA SW-846 Ch.7.3.4	09/20/2016 10:47	09/20/2016 14:02	AD
								Certifications: CTDOH,PADEP			

TCLP Extraction for METALS EPA 1311

Log-in Notes: **Sample Notes:**

Sample Prepared by Method: EPA SW 846-1311 TCLP ext. for metals

CAS No.	Parameter	Result	Flag	Units	LOD/MDL	Reported to LOQ	Dilution	Reference Method	Date/Time Prepared	Date/Time Analyzed	Analyst
	TCLP Extraction	Completed		N/A	1.00	1.00	1	EPA 1311	09/14/2016 19:15	09/15/2016 12:18	TJM
								Certifications: NELAC-NY10854,CTDOH,NJDEP,PADEP			

Sample Information

Client Sample ID: SB-13-14.5-15.0' **York Sample ID:** 16I0414-13

York Project (SDG) No.	Client Project ID	Matrix	Collection Date/Time	Date Received
16I0414	BEGS-Flatbush Ave Waterman Phase II 15-008-0265	Soil	September 9, 2016 1:15 pm	09/13/2016

Volatile Organics, 8260 - Comprehensive

Log-in Notes: VOA-CONT **Sample Notes:** VOA-CONT

Sample Prepared by Method: EPA 5035A

CAS No.	Parameter	Result	Flag	Units	Reported to LOD/MDL	LOQ	Dilution	Reference Method	Date/Time Prepared	Date/Time Analyzed	Analyst
630-20-6	1,1,1,2-Tetrachloroethane	ND		mg/kg dry	0.0028	0.0055	1	EPA 8260C	09/19/2016 17:34	09/20/2016 00:51	SS
								Certifications: CTDOH,NELAC-NY10854,NJDEP			
71-55-6	1,1,1-Trichloroethane	ND		mg/kg dry	0.0028	0.0055	1	EPA 8260C	09/19/2016 17:34	09/20/2016 00:51	SS
								Certifications: CTDOH,NELAC-NY10854,NJDEP,PADEP			
79-34-5	1,1,2,2-Tetrachloroethane	ND		mg/kg dry	0.0028	0.0055	1	EPA 8260C	09/19/2016 17:34	09/20/2016 00:51	SS
								Certifications: CTDOH,NELAC-NY10854,NJDEP,PADEP			
76-13-1	1,1,2-Trichloro-1,2,2-trifluoroethane (Freon 113)	ND		mg/kg dry	0.0028	0.0055	1	EPA 8260C	09/19/2016 17:34	09/20/2016 00:51	SS
								Certifications: CTDOH,NELAC-NY10854,NJDEP			
79-00-5	1,1,2-Trichloroethane	ND		mg/kg dry	0.0028	0.0055	1	EPA 8260C	09/19/2016 17:34	09/20/2016 00:51	SS
								Certifications: CTDOH,NELAC-NY10854,NJDEP,PADEP			
75-34-3	1,1-Dichloroethane	ND		mg/kg dry	0.0028	0.0055	1	EPA 8260C	09/19/2016 17:34	09/20/2016 00:51	SS
								Certifications: CTDOH,NELAC-NY10854,NJDEP,PADEP			
75-35-4	1,1-Dichloroethylene	ND		mg/kg dry	0.0028	0.0055	1	EPA 8260C	09/19/2016 17:34	09/20/2016 00:51	SS
								Certifications: CTDOH,NELAC-NY10854,NJDEP,PADEP			
87-61-6	1,2,3-Trichlorobenzene	ND		mg/kg dry	0.0028	0.0055	1	EPA 8260C	09/19/2016 17:34	09/20/2016 00:51	SS
								Certifications: NELAC-NY10854,NJDEP			

Sample Information

Client Sample ID: SB-13-14.5-15.0'

York Sample ID: 16I0414-13

York Project (SDG) No.	Client Project ID	Matrix	Collection Date/Time	Date Received
16I0414	BEGS-Flatbush Ave Waterman Phase II 15-008-0265	Soil	September 9, 2016 1:15 pm	09/13/2016

Volatile Organics, 8260 - Comprehensive

Log-in Notes: VOA-CONT **Sample Notes:** VOA-CONT

Sample Prepared by Method: EPA 5035A

CAS No.	Parameter	Result	Flag	Units	Reported to LOD/MDL	LOQ	Dilution	Reference Method	Date/Time Prepared	Date/Time Analyzed	Analyst
96-18-4	1,2,3-Trichloropropane	ND		mg/kg dry	0.0028	0.0055	1	EPA 8260C Certifications: NELAC-NY10854,NJDEP	09/19/2016 17:34	09/20/2016 00:51	SS
120-82-1	1,2,4-Trichlorobenzene	ND		mg/kg dry	0.0028	0.0055	1	EPA 8260C Certifications: NELAC-NY10854,NJDEP	09/19/2016 17:34	09/20/2016 00:51	SS
95-63-6	1,2,4-Trimethylbenzene	ND		mg/kg dry	0.0028	0.0055	1	EPA 8260C Certifications: CTDOH,NELAC-NY10854,NJDEP	09/19/2016 17:34	09/20/2016 00:51	SS
96-12-8	1,2-Dibromo-3-chloropropane	ND		mg/kg dry	0.0028	0.0055	1	EPA 8260C Certifications: CTDOH,NELAC-NY10854,NJDEP	09/19/2016 17:34	09/20/2016 00:51	SS
106-93-4	1,2-Dibromoethane	ND		mg/kg dry	0.0028	0.0055	1	EPA 8260C Certifications: CTDOH,NELAC-NY10854,NJDEP	09/19/2016 17:34	09/20/2016 00:51	SS
95-50-1	1,2-Dichlorobenzene	ND		mg/kg dry	0.0028	0.0055	1	EPA 8260C Certifications: CTDOH,NELAC-NY10854,NJDEP,PADEP	09/19/2016 17:34	09/20/2016 00:51	SS
107-06-2	1,2-Dichloroethane	ND		mg/kg dry	0.0028	0.0055	1	EPA 8260C Certifications: CTDOH,NELAC-NY10854,NJDEP,PADEP	09/19/2016 17:34	09/20/2016 00:51	SS
[illegible]7-5	1,2-Dichloropropane	ND		mg/kg dry	0.0028	0.0055	1	EPA 8260C Certifications: CTDOH,NELAC-NY10854,NJDEP	09/19/2016 17:34	09/20/2016 00:51	SS
108-67-8	1,3,5-Trimethylbenzene	ND		mg/kg dry	0.0028	0.0055	1	EPA 8260C Certifications: CTDOH,NELAC-NY10854,NJDEP	09/19/2016 17:34	09/20/2016 00:51	SS
541-73-1	1,3-Dichlorobenzene	ND		mg/kg dry	0.0028	0.0055	1	EPA 8260C Certifications: CTDOH,NELAC-NY10854,NJDEP,PADEP	09/19/2016 17:34	09/20/2016 00:51	SS
106-46-7	1,4-Dichlorobenzene	ND		mg/kg dry	0.0028	0.0055	1	EPA 8260C Certifications: CTDOH,NELAC-NY10854,NJDEP,PADEP	09/19/2016 17:34	09/20/2016 00:51	SS
123-91-1	1,4-Dioxane	ND		mg/kg dry	0.055	0.11	1	EPA 8260C Certifications: NELAC-NY10854,NJDEP	09/19/2016 17:34	09/20/2016 00:51	SS
78-93-3	2-Butanone	ND		mg/kg dry	0.0028	0.0055	1	EPA 8260C Certifications: CTDOH,NELAC-NY10854,NJDEP	09/19/2016 17:34	09/20/2016 00:51	SS
591-78-6	2-Hexanone	ND		mg/kg dry	0.0028	0.0055	1	EPA 8260C Certifications: CTDOH,NELAC-NY10854,NJDEP	09/19/2016 17:34	09/20/2016 00:51	SS
108-10-1	4-Methyl-2-pentanone	ND		mg/kg dry	0.0028	0.0055	1	EPA 8260C Certifications: CTDOH,NELAC-NY10854,NJDEP	09/19/2016 17:34	09/20/2016 00:51	SS
67-64-1	Acetone	ND		mg/kg dry	0.0055	0.011	1	EPA 8260C Certifications: CTDOH,NELAC-NY10854,NJDEP	09/19/2016 17:34	09/20/2016 00:51	SS
107-02-8	Acrolein	ND		mg/kg dry	0.0055	0.011	1	EPA 8260C Certifications: CTDOH,NELAC-NY10854,NJDEP	09/19/2016 17:34	09/20/2016 00:51	SS
107-13-1	Acrylonitrile	ND		mg/kg dry	0.0028	0.0055	1	EPA 8260C Certifications: CTDOH,NELAC-NY10854,NJDEP	09/19/2016 17:34	09/20/2016 00:51	SS
71-43-2	Benzene	ND		mg/kg dry	0.0028	0.0055	1	EPA 8260C Certifications: CTDOH,NELAC-NY10854,NJDEP,PADEP	09/19/2016 17:34	09/20/2016 00:51	SS
74-97-5	Bromochloromethane	ND		mg/kg dry	0.0028	0.0055	1	EPA 8260C Certifications: NELAC-NY10854,NJDEP	09/19/2016 17:34	09/20/2016 00:51	SS
75-27-4	Bromodichloromethane	ND		mg/kg dry	0.0028	0.0055	1	EPA 8260C Certifications: CTDOH,NELAC-NY10854,NJDEP,PADEP	09/19/2016 17:34	09/20/2016 00:51	SS
[illegible]-2	Bromoform	ND		mg/kg dry	0.0028	0.0055	1	EPA 8260C Certifications: CTDOH,NELAC-NY10854,NJDEP,PADEP	09/19/2016 17:34	09/20/2016 00:51	SS

Sample Information

Client Sample ID: SB-13-14.5-15.0' **York Sample ID:** 16I0414-13

York Project (SDG) No.	Client Project ID	Matrix	Collection Date/Time	Date Received
16I0414	BEGS-Flatbush Ave Waterman Phase II 15-008-0265	Soil	September 9, 2016 1:15 pm	09/13/2016

Volatile Organics, 8260 - Comprehensive **Log-in Notes:** VOA-CONT **Sample Notes:** VOA-CONT

Sample Prepared by Method: EPA 5035A

CAS No.	Parameter	Result	Flag	Units	Reported to LOD/MDL	LOQ	Dilution	Reference Method	Date/Time Prepared	Date/Time Analyzed	Analyst
74-83-9	Bromomethane	ND		mg/kg dry	0.0028	0.0055	1	EPA 8260C Certifications: CTDOH,NELAC-NY10854,NJDEP,PADEP	09/19/2016 17:34	09/20/2016 00:51	SS
75-15-0	Carbon disulfide	ND		mg/kg dry	0.0028	0.0055	1	EPA 8260C Certifications: CTDOH,NELAC-NY10854,NJDEP	09/19/2016 17:34	09/20/2016 00:51	SS
56-23-5	Carbon tetrachloride	ND		mg/kg dry	0.0028	0.0055	1	EPA 8260C Certifications: CTDOH,NELAC-NY10854,NJDEP,PADEP	09/19/2016 17:34	09/20/2016 00:51	SS
108-90-7	Chlorobenzene	ND		mg/kg dry	0.0028	0.0055	1	EPA 8260C Certifications: CTDOH,NELAC-NY10854,NJDEP,PADEP	09/19/2016 17:34	09/20/2016 00:51	SS
75-00-3	Chloroethane	ND		mg/kg dry	0.0028	0.0055	1	EPA 8260C Certifications: CTDOH,NELAC-NY10854,NJDEP,PADEP	09/19/2016 17:34	09/20/2016 00:51	SS
67-66-3	Chloroform	ND		mg/kg dry	0.0028	0.0055	1	EPA 8260C Certifications: CTDOH,NELAC-NY10854,NJDEP,PADEP	09/19/2016 17:34	09/20/2016 00:51	SS
74-87-3	Chloromethane	ND		mg/kg dry	0.0028	0.0055	1	EPA 8260C Certifications: CTDOH,NELAC-NY10854,NJDEP,PADEP	09/19/2016 17:34	09/20/2016 00:51	SS
156-59-2	cis-1,2-Dichloroethylene	ND		mg/kg dry	0.0028	0.0055	1	EPA 8260C Certifications: CTDOH,NELAC-NY10854,NJDEP	09/19/2016 17:34	09/20/2016 00:51	SS
10061-01-5	cis-1,3-Dichloropropylene	ND		mg/kg dry	0.0028	0.0055	1	EPA 8260C Certifications: CTDOH,NELAC-NY10854,NJDEP,PADEP	09/19/2016 17:34	09/20/2016 00:51	SS
110-82-7	Cyclohexane	ND		mg/kg dry	0.0028	0.0055	1	EPA 8260C Certifications: NELAC-NY10854,NJDEP	09/19/2016 17:34	09/20/2016 00:51	SS
124-48-1	Dibromochloromethane	ND		mg/kg dry	0.0028	0.0055	1	EPA 8260C Certifications: NELAC-NY10854,NJDEP,PADEP	09/19/2016 17:34	09/20/2016 00:51	SS
74-95-3	Dibromomethane	ND		mg/kg dry	0.0028	0.0055	1	EPA 8260C Certifications: NELAC-NY10854,NJDEP	09/19/2016 17:34	09/20/2016 00:51	SS
75-71-8	Dichlorodifluoromethane	ND		mg/kg dry	0.0028	0.0055	1	EPA 8260C Certifications: NELAC-NY10854,NJDEP	09/19/2016 17:34	09/20/2016 00:51	SS
100-41-4	Ethyl Benzene	ND		mg/kg dry	0.0028	0.0055	1	EPA 8260C Certifications: CTDOH,NELAC-NY10854,NJDEP,PADEP	09/19/2016 17:34	09/20/2016 00:51	SS
87-68-3	Hexachlorobutadiene	ND		mg/kg dry	0.0028	0.0055	1	EPA 8260C Certifications: NELAC-NY10854,NJDEP	09/19/2016 17:34	09/20/2016 00:51	SS
98-82-8	Isopropylbenzene	ND		mg/kg dry	0.0028	0.0055	1	EPA 8260C Certifications: CTDOH,NELAC-NY10854,NJDEP	09/19/2016 17:34	09/20/2016 00:51	SS
79-20-9	Methyl acetate	ND		mg/kg dry	0.0028	0.0055	1	EPA 8260C Certifications: NELAC-NY10854,NJDEP	09/19/2016 17:34	09/20/2016 00:51	SS
1634-04-4	Methyl tert-butyl ether (MTBE)	ND		mg/kg dry	0.0028	0.0055	1	EPA 8260C Certifications: CTDOH,NELAC-NY10854,NJDEP	09/19/2016 17:34	09/20/2016 00:51	SS
108-87-2	Methylcyclohexane	ND		mg/kg dry	0.0028	0.0055	1	EPA 8260C Certifications: NELAC-NY10854,NJDEP	09/19/2016 17:34	09/20/2016 00:51	SS
75-09-2	**Methylene chloride**	**0.0092**	J	mg/kg dry	0.0055	0.011	1	EPA 8260C Certifications: CTDOH,NELAC-NY10854,NJDEP,PADEP	09/19/2016 17:34	09/20/2016 00:51	SS
104-51-8	n-Butylbenzene	ND		mg/kg dry	0.0028	0.0055	1	EPA 8260C Certifications: CTDOH,NELAC-NY10854,NJDEP	09/19/2016 17:34	09/20/2016 00:51	SS
103-65-1	n-Propylbenzene	ND		mg/kg dry	0.0028	0.0055	1	EPA 8260C Certifications: CTDOH,NELAC-NY10854,NJDEP	09/19/2016 17:34	09/20/2016 00:51	SS

Sample Information

Client Sample ID: SB-13-14.5-15.0' **York Sample ID:** 16I0414-13

York Project (SDG) No.	Client Project ID	Matrix	Collection Date/Time	Date Received
16I0414	BEGS-Flatbush Ave Waterman Phase II 15-008-0265	Soil	September 9, 2016 1:15 pm	09/13/2016

Volatile Organics, 8260 - Comprehensive

Log-in Notes: VOA-CONT **Sample Notes:** VOA-CONT

Sample Prepared by Method: EPA 5035A

CAS No.	Parameter	Result	Flag	Units	Reported to LOD/MDL	LOQ	Dilution	Reference Method	Date/Time Prepared	Date/Time Analyzed	Analyst
95-47-6	o-Xylene	ND		mg/kg dry	0.0028	0.0055	1	EPA 8260C Certifications: CTDOH,NELAC-NY10854	09/19/2016 17:34	09/20/2016 00:51	SS
179601-23-1	p- & m- Xylenes	ND		mg/kg dry	0.0055	0.011	1	EPA 8260C Certifications: CTDOH,NELAC-NY10854	09/19/2016 17:34	09/20/2016 00:51	SS
99-87-6	p-Isopropyltoluene	ND		mg/kg dry	0.0028	0.0055	1	EPA 8260C Certifications: CTDOH,NELAC-NY10854,NJDEP	09/19/2016 17:34	09/20/2016 00:51	SS
135-98-8	sec-Butylbenzene	ND		mg/kg dry	0.0028	0.0055	1	EPA 8260C Certifications: CTDOH,NELAC-NY10854,NJDEP	09/19/2016 17:34	09/20/2016 00:51	SS
100-42-5	Styrene	ND		mg/kg dry	0.0028	0.0055	1	EPA 8260C Certifications: CTDOH,NELAC-NY10854,NJDEP	09/19/2016 17:34	09/20/2016 00:51	SS
75-65-0	tert-Butyl alcohol (TBA)	ND		mg/kg dry	0.0028	0.0055	1	EPA 8260C Certifications: NELAC-NY10854,NJDEP	09/19/2016 17:34	09/20/2016 00:51	SS
98-06-6	tert-Butylbenzene	ND		mg/kg dry	0.0028	0.0055	1	EPA 8260C Certifications: CTDOH,NELAC-NY10854,NJDEP	09/19/2016 17:34	09/20/2016 00:51	SS
18-4	Tetrachloroethylene	ND		mg/kg dry	0.0028	0.0055	1	EPA 8260C Certifications: CTDOH,NELAC-NY10854,NJDEP,PADEP	09/19/2016 17:34	09/20/2016 00:51	SS
108-88-3	Toluene	ND		mg/kg dry	0.0028	0.0055	1	EPA 8260C Certifications: CTDOH,NELAC-NY10854,NJDEP,PADEP	09/19/2016 17:34	09/20/2016 00:51	SS
156-60-5	trans-1,2-Dichloroethylene	ND		mg/kg dry	0.0028	0.0055	1	EPA 8260C Certifications: CTDOH,NELAC-NY10854,NJDEP	09/19/2016 17:34	09/20/2016 00:51	SS
10061-02-6	trans-1,3-Dichloropropylene	ND		mg/kg dry	0.0028	0.0055	1	EPA 8260C Certifications: CTDOH,NELAC-NY10854,NJDEP,PADEP	09/19/2016 17:34	09/20/2016 00:51	SS
79-01-6	Trichloroethylene	ND		mg/kg dry	0.0028	0.0055	1	EPA 8260C Certifications: CTDOH,NELAC-NY10854,NJDEP,PADEP	09/19/2016 17:34	09/20/2016 00:51	SS
75-69-4	Trichlorofluoromethane	ND		mg/kg dry	0.0028	0.0055	1	EPA 8260C Certifications: CTDOH,NELAC-NY10854,NJDEP,PADEP	09/19/2016 17:34	09/20/2016 00:51	SS
75-01-4	Vinyl Chloride	ND		mg/kg dry	0.0028	0.0055	1	EPA 8260C Certifications: CTDOH,NELAC-NY10854,NJDEP,PADEP	09/19/2016 17:34	09/20/2016 00:51	SS
1330-20-7	Xylenes, Total	ND		mg/kg dry	0.0083	0.017	1	EPA 8260C Certifications: CTDOH,NELAC-NY10854,NJDEP,PADEP	09/19/2016 17:34	09/20/2016 00:51	SS

	Surrogate Recoveries	Result	Acceptance Range
17060-07-0	*Surrogate: 1,2-Dichloroethane-d4*	*104 %*	*77-125*
2037-26-5	*Surrogate: Toluene-d8*	*98.7 %*	*85-120*
460-00-4	*Surrogate: p-Bromofluorobenzene*	*93.2 %*	*76-130*

Total Solids

Log-in Notes: VOA-CONT **Sample Notes:**

Sample Prepared by Method: % Solids Prep

CAS No.	Parameter	Result	Flag	Units	LOD/MDL	Reported to LOQ	Dilution	Reference Method	Date/Time Prepared	Date/Time Analyzed	Analyst
solids	*** % Solids**	**90.8**		%	0.100	0.100	1	SM 2540G Certifications: CTDOH	09/19/2016 14:18	09/20/2016 08:04	LAB

Sample Information

Client Sample ID: SB-13-Comp

York Sample ID: 16I0414-14

York Project (SDG) No.	Client Project ID	Matrix	Collection Date/Time	Date Received
16I0414	BEGS-Flatbush Ave Waterman Phase II 15-008-0265	Soil	September 9, 2016 1:20 pm	09/13/2016

Semi-Volatiles, PAH Target List

Log-in Notes:

Sample Notes:

Sample Prepared by Method: EPA 3550C

CAS No.	Parameter	Result	Flag	Units	Reported to LOD/MDL	LOQ	Dilution	Reference Method	Date/Time Prepared	Date/Time Analyzed	Analyst
91-57-6	2-Methylnaphthalene	ND		mg/kg dry	0.0543	0.108	2	EPA 8270D Certifications: CTDOH,NELAC-NY10854,NJDEP,PADEP	09/19/2016 11:58	09/20/2016 11:44	KH
83-32-9	Acenaphthene	ND		mg/kg dry	0.0543	0.108	2	EPA 8270D Certifications: CTDOH,NELAC-NY10854,NJDEP,PADEP	09/19/2016 11:58	09/20/2016 11:44	KH
208-96-8	Acenaphthylene	ND		mg/kg dry	0.0543	0.108	2	EPA 8270D Certifications: CTDOH,NELAC-NY10854,NJDEP,PADEP	09/19/2016 11:58	09/20/2016 11:44	KH
120-12-7	Anthracene	ND		mg/kg dry	0.0543	0.108	2	EPA 8270D Certifications: CTDOH,NELAC-NY10854,NJDEP,PADEP	09/19/2016 11:58	09/20/2016 11:44	KH
56-55-3	Benzo(a)anthracene	ND		mg/kg dry	0.0543	0.108	2	EPA 8270D Certifications: CTDOH,NELAC-NY10854,NJDEP,PADEP	09/19/2016 11:58	09/20/2016 11:44	KH
50-32-8	Benzo(a)pyrene	ND		mg/kg dry	0.0543	0.108	2	EPA 8270D Certifications: CTDOH,NELAC-NY10854,NJDEP,PADEP	09/19/2016 11:58	09/20/2016 11:44	KH
205-99-2	Benzo(b)fluoranthene	ND		mg/kg dry	0.0543	0.108	2	EPA 8270D Certifications: CTDOH,NELAC-NY10854,NJDEP,PADEP	09/19/2016 11:58	09/20/2016 11:44	KH
191-24-2	Benzo(g,h,i)perylene	ND		mg/kg dry	0.0543	0.108	2	EPA 8270D Certifications: CTDOH,NELAC-NY10854,NJDEP,PADEP	09/19/2016 11:58	09/20/2016 11:44	KH
207-08-9	Benzo(k)fluoranthene	ND		mg/kg dry	0.0543	0.108	2	EPA 8270D Certifications: CTDOH,NELAC-NY10854,NJDEP,PADEP	09/19/2016 11:58	09/20/2016 11:44	KH
218-01-9	Chrysene	ND		mg/kg dry	0.0543	0.108	2	EPA 8270D Certifications: CTDOH,NELAC-NY10854,NJDEP,PADEP	09/19/2016 11:58	09/20/2016 11:44	KH
53-70-3	Dibenzo(a,h)anthracene	ND		mg/kg dry	0.0543	0.108	2	EPA 8270D Certifications: CTDOH,NELAC-NY10854,NJDEP,PADEP	09/19/2016 11:58	09/20/2016 11:44	KH
206-44-0	Fluoranthene	ND		mg/kg dry	0.0543	0.108	2	EPA 8270D Certifications: CTDOH,NELAC-NY10854,NJDEP,PADEP	09/19/2016 11:58	09/20/2016 11:44	KH
86-73-7	Fluorene	ND		mg/kg dry	0.0543	0.108	2	EPA 8270D Certifications: NELAC-NY10854,NJDEP,PADEP	09/19/2016 11:58	09/20/2016 11:44	KH
193-39-5	Indeno(1,2,3-cd)pyrene	ND		mg/kg dry	0.0543	0.108	2	EPA 8270D Certifications: CTDOH,NELAC-NY10854,NJDEP,PADEP	09/19/2016 11:58	09/20/2016 11:44	KH
91-20-3	Naphthalene	ND		mg/kg dry	0.0543	0.108	2	EPA 8270D Certifications: CTDOH,NELAC-NY10854,NJDEP,PADEP	09/19/2016 11:58	09/20/2016 11:44	KH
85-01-8	Phenanthrene	ND		mg/kg dry	0.0543	0.108	2	EPA 8270D Certifications: CTDOH,NELAC-NY10854,NJDEP,PADEP	09/19/2016 11:58	09/20/2016 11:44	KH
129-00-0	Pyrene	ND		mg/kg dry	0.0543	0.108	2	EPA 8270D Certifications: CTDOH,NELAC-NY10854,NJDEP,PADEP	09/19/2016 11:58	09/20/2016 11:44	KH

	Surrogate Recoveries	Result	Acceptance Range
4165-60-0	*Surrogate: Nitrobenzene-d5*	*36.9 %*	*22-108*
321-60-8	*Surrogate: 2-Fluorobiphenyl*	*52.1 %*	*21-113*
1718-51-0	*Surrogate: Terphenyl-d14*	*43.1 %*	*24-116*

Polychlorinated Biphenyls (PCB)

Log-in Notes:

Sample Notes:

Sample Information

Client Sample ID: SB-13-Comp

York Sample ID: 16I0414-14

York Project (SDG) No.	Client Project ID	Matrix	Collection Date/Time	Date Received
16I0414	BEGS-Flatbush Ave Waterman Phase II 15-008-0265	Soil	September 9, 2016 1:20 pm	09/13/2016

Sample Prepared by Method: EPA 3550C

CAS No.	Parameter	Result	Flag	Units	LOD/MDL	Reported to LOQ	Dilution	Reference Method	Date/Time Prepared	Date/Time Analyzed	Analyst
12674-11-2	Aroclor 1016	ND		mg/kg dry	0.0216	0.0216	1	EPA 8082A Certifications: NELAC-NY10854,CTDOH,NJDEP,PADEP	09/20/2016 07:11	09/20/2016 14:50	AMC
11104-28-2	Aroclor 1221	ND		mg/kg dry	0.0216	0.0216	1	EPA 8082A Certifications: NELAC-NY10854,CTDOH,NJDEP,PADEP	09/20/2016 07:11	09/20/2016 14:50	AMC
11141-16-5	Aroclor 1232	ND		mg/kg dry	0.0216	0.0216	1	EPA 8082A Certifications: NELAC-NY10854,CTDOH,NJDEP,PADEP	09/20/2016 07:11	09/20/2016 14:50	AMC
53469-21-9	Aroclor 1242	ND		mg/kg dry	0.0216	0.0216	1	EPA 8082A Certifications: NELAC-NY10854,CTDOH,NJDEP,PADEP	09/20/2016 07:11	09/20/2016 14:50	AMC
12672-29-6	Aroclor 1248	ND		mg/kg dry	0.0216	0.0216	1	EPA 8082A Certifications: NELAC-NY10854,CTDOH,NJDEP,PADEP	09/20/2016 07:11	09/20/2016 14:50	AMC
11097-69-1	Aroclor 1254	ND		mg/kg dry	0.0216	0.0216	1	EPA 8082A Certifications: NELAC-NY10854,CTDOH,NJDEP,PADEP	09/20/2016 07:11	09/20/2016 14:50	AMC
11096-82-5	Aroclor 1260	ND		mg/kg dry	0.0216	0.0216	1	EPA 8082A Certifications: NELAC-NY10854,CTDOH,NJDEP,PADEP	09/20/2016 07:11	09/20/2016 14:50	AMC
1336-36-3	* Total PCBs	ND		mg/kg dry	0.0216	0.0216	1	EPA 8082A Certifications:	09/20/2016 07:11	09/20/2016 14:50	AMC

	Surrogate Recoveries	Result	Acceptance Range
877-09-8	*Surrogate: Tetrachloro-m-xylene*	*98.5 %*	*30-140*
2051-24-3	*Surrogate: Decachlorobiphenyl*	*93.5 %*	*30-140*

Total Petroleum Hydrocarbons-DRO (C10-C28)

Log-in Notes:

Sample Notes:

Sample Prepared by Method: EPA 3550C

CAS No.	Parameter	Result	Flag	Units	LOD/MDL	Reported to LOQ	Dilution	Reference Method	Date/Time Prepared	Date/Time Analyzed	Analyst
	Total Petroleum Hydrocarbons-DRO	**56.4**		mg/kg dry	4.42	13.0	1	EPA 8015D Certifications: NELAC-NY10854,NJDEP,PADEP	09/19/2016 12:01	09/19/2016 21:29	AMC

	Surrogate Recoveries	Result	Acceptance Range
638-68-6	*Surrogate: Triacontane*	*79.6 %*	*30-150*

Total Petroleum Hydrocarbons-GRO (C5-C10)

Log-in Notes:

Sample Notes: VOA-CONT

Sample Prepared by Method: EPA 5035A

CAS No.	Parameter	Result	Flag	Units	LOD/MDL	Reported to LOQ	Dilution	Reference Method	Date/Time Prepared	Date/Time Analyzed	Analyst
	Total Petroleum Hydrocarbons-GRO	ND		mg/kg dry	52.0	104	100	EPA 8015D Certifications: NELAC-NY10854,NJDEP,PADEP	09/19/2016 15:46	09/20/2016 04:01	OW

	Surrogate Recoveries	Result	Acceptance Range
460-00-4	*Surrogate: p-Bromofluorobenzene*	*101 %*	*70-130*

Metals, TCLP RCRA

Log-in Notes:

Sample Notes:

Sample Prepared by Method: EPA 3015A/1311

CAS No.	Parameter	Result	Flag	Units	LOD/MDL	Reported to LOQ	Dilution	Reference Method	Date/Time Prepared	Date/Time Analyzed	Analyst

Sample Information

Client Sample ID: SB-13-Comp

York Sample ID: 16I0414-14

York Project (SDG) No.	Client Project ID	Matrix	Collection Date/Time	Date Received
16I0414	BEGS-Flatbush Ave Waterman Phase II 15-008-0265	Soil	September 9, 2016 1:20 pm	09/13/2016

Metals, TCLP RCRA

Log-in Notes: **Sample Notes:**

Sample Prepared by Method: EPA 3015A/1311

CAS No.	Parameter	Result	Flag	Units	LOD/MDL	Reported to LOQ	Dilution	Reference Method	Date/Time Prepared	Date/Time Analyzed	Analyst
7440-38-2	Arsenic	ND		mg/L	0.004	0.004	1	EPA 6010C/1311	09/16/2016 11:59	09/17/2016 02:23	ALD
								Certifications: CTDOH,NELAC-NY10854,NJDEP,PADEP			
7440-39-3	**Barium**	**0.325**		mg/L	0.011	0.011	1	EPA 6010C/1311	09/16/2016 11:59	09/17/2016 02:23	ALD
								Certifications: CTDOH,NELAC-NY10854,NJDEP,PADEP			
7440-43-9	Cadmium	ND		mg/L	0.003	0.003	1	EPA 6010C/1311	09/16/2016 11:59	09/17/2016 02:23	ALD
								Certifications: CTDOH,NELAC-NY10854,NJDEP,PADEP			
7440-47-3	Chromium	ND		mg/L	0.006	0.006	1	EPA 6010C/1311	09/16/2016 11:59	09/17/2016 02:23	ALD
								Certifications: CTDOH,NELAC-NY10854,NJDEP,PADEP			
7439-92-1	**Lead**	**0.509**		mg/L	0.003	0.003	1	EPA 6010C/1311	09/16/2016 11:59	09/17/2016 02:23	ALD
								Certifications: CTDOH,NELAC-NY10854,NJDEP,PADEP			
7782-49-2	Selenium	ND	M-SeTC	mg/L	0.011	0.011	1	EPA 6010C/1311	09/16/2016 11:59	09/17/2016 02:23	ALD
								Certifications: CTDOH,NELAC-NY10854,NJDEP,PADEP			
7440-22-4	Silver	ND		mg/L	0.006	0.006	1	EPA 6010C/1311	09/16/2016 11:59	09/17/2016 02:23	ALD
								Certifications: CTDOH,NELAC-NY10854,NJDEP,PADEP			

Mercury TCLP by 7473

Log-in Notes: **Sample Notes:**

Sample Prepared by Method: EPA 7473 water

CAS No.	Parameter	Result	Flag	Units	LOD/MDL	Reported to LOQ	Dilution	Reference Method	Date/Time Prepared	Date/Time Analyzed	Analyst
7439-97-6	Mercury	ND		mg/L	0.0000390	0.000200	1	EPA 7473/1311	09/16/2016 06:16	09/16/2016 14:16	ALD
								Certifications: CTDOH,NJDEP,PADEP,NELAC-NY10854			

Ignitability

Log-in Notes: **Sample Notes:**

Sample Prepared by Method: Analysis Preparation

CAS No.	Parameter	Result	Flag	Units	LOD/MDL	Reported to LOQ	Dilution	Reference Method	Date/Time Prepared	Date/Time Analyzed	Analyst
	* Ignitability	ND	U	-	1	1	1	EPA 1030P	09/17/2016 20:49	09/18/2016 02:11	AA
								Certifications: CTDOH,PADEP			

Total Solids

Log-in Notes: **Sample Notes:**

Sample Prepared by Method: % Solids Prep

CAS No.	Parameter	Result	Flag	Units	LOD/MDL	Reported to LOQ	Dilution	Reference Method	Date/Time Prepared	Date/Time Analyzed	Analyst
solids	*** % Solids**	**77.0**		%	0.100	0.100	1	SM 2540G	09/19/2016 07:35	09/19/2016 14:01	LAB
								Certifications: CTDOH			

Corrosivity

Log-in Notes: **Sample Notes:**

Sample Prepared by Method: Analysis Preparation

CAS No.	Parameter	Result	Flag	Units	LOD/MDL	Reported to LOQ	Dilution	Reference Method	Date/Time Prepared	Date/Time Analyzed	Analyst
	pH	**5.53**	HT-pH	pH units		0.500	1	EPA 9045D	09/20/2016 14:13	09/20/2016 16:22	DM
								Certifications: NELAC-NY10854,CTDOH,PADEP			

Sample Information

Client Sample ID: SB-13-Comp **York Sample ID:** 16I0414-14

York Project (SDG) No.	Client Project ID	Matrix	Collection Date/Time	Date Received
16I0414	BEGS-Flatbush Ave Waterman Phase II 15-008-0265	Soil	September 9, 2016 1:20 pm	09/13/2016

Reactivity-Cyanide

Log-in Notes: **Sample Notes:**

Sample Prepared by Method: Analysis Preparation

CAS No.	Parameter	Result	Flag	Units	LOD/MDL	Reported to LOQ	Dilution	Reference Method	Date/Time Prepared	Date/Time Analyzed	Analyst
	* Reactivity - Cyanide	ND		mg/kg	0.250	0.250	1	EPA SW-846 Ch.7.3.3	09/20/2016 10:46	09/20/2016 14:00	AD
								Certifications: CTDOH,PADEP			

Reactivity-Sulfide

Log-in Notes: **Sample Notes:**

Sample Prepared by Method: Analysis Preparation

CAS No.	Parameter	Result	Flag	Units	LOD/MDL	Reported to LOQ	Dilution	Reference Method	Date/Time Prepared	Date/Time Analyzed	Analyst
	*** Reactivity - Sulfide**	**16.0**		mg/kg	15.0	15.0	1	EPA SW-846 Ch.7.3.4	09/20/2016 10:47	09/20/2016 14:02	AD
								Certifications: CTDOH,PADEP			

TCLP Extraction for METALS EPA 1311

Log-in Notes: **Sample Notes:**

Sample Prepared by Method: EPA SW 846-1311 TCLP ext. for metals

CAS No.	Parameter	Result	Flag	Units	LOD/MDL	Reported to LOQ	Dilution	Reference Method	Date/Time Prepared	Date/Time Analyzed	Analyst
	TCLP Extraction	Completed		N/A	1.00	1.00	1	EPA 1311	09/14/2016 19:15	09/15/2016 12:18	TJM
								Certifications: NELAC-NY10854,CTDOH,NJDEP,PADEP			

Sample Information

Client Sample ID: SB-11-14.5-15.0' **York Sample ID:** 16I0414-15

York Project (SDG) No.	Client Project ID	Matrix	Collection Date/Time	Date Received
16I0414	BEGS-Flatbush Ave Waterman Phase II 15-008-0265	Soil	September 9, 2016 12:15 pm	09/13/2016

Volatile Organics, 8260 - Comprehensive

Log-in Notes: VOA-CONT **Sample Notes:** VOA-CONT

Sample Prepared by Method: EPA 5035A

CAS No.	Parameter	Result	Flag	Units	Reported to LOD/MDL	LOQ	Dilution	Reference Method	Date/Time Prepared	Date/Time Analyzed	Analyst
630-20-6	1,1,1,2-Tetrachloroethane	ND		mg/kg dry	0.0029	0.0057	1	EPA 8260C	09/19/2016 17:34	09/20/2016 01:22	SS
								Certifications: CTDOH,NELAC-NY10854,NJDEP			
71-55-6	1,1,1-Trichloroethane	ND		mg/kg dry	0.0029	0.0057	1	EPA 8260C	09/19/2016 17:34	09/20/2016 01:22	SS
								Certifications: CTDOH,NELAC-NY10854,NJDEP,PADEP			
79-34-5	1,1,2,2-Tetrachloroethane	ND		mg/kg dry	0.0029	0.0057	1	EPA 8260C	09/19/2016 17:34	09/20/2016 01:22	SS
								Certifications: CTDOH,NELAC-NY10854,NJDEP,PADEP			
76-13-1	1,1,2-Trichloro-1,2,2-trifluoroethane (Freon 113)	ND		mg/kg dry	0.0029	0.0057	1	EPA 8260C	09/19/2016 17:34	09/20/2016 01:22	SS
								Certifications: CTDOH,NELAC-NY10854,NJDEP			
79-00-5	1,1,2-Trichloroethane	ND		mg/kg dry	0.0029	0.0057	1	EPA 8260C	09/19/2016 17:34	09/20/2016 01:22	SS
								Certifications: CTDOH,NELAC-NY10854,NJDEP,PADEP			
75-34-3	1,1-Dichloroethane	ND		mg/kg dry	0.0029	0.0057	1	EPA 8260C	09/19/2016 17:34	09/20/2016 01:22	SS
								Certifications: CTDOH,NELAC-NY10854,NJDEP,PADEP			
[illegible]5-4	1,1-Dichloroethylene	ND		mg/kg dry	0.0029	0.0057	1	EPA 8260C	09/19/2016 17:34	09/20/2016 01:22	SS
								Certifications: CTDOH,NELAC-NY10854,NJDEP,PADEP			
87-61-6	1,2,3-Trichlorobenzene	ND		mg/kg dry	0.0029	0.0057	1	EPA 8260C	09/19/2016 17:34	09/20/2016 01:22	SS
								Certifications: NELAC-NY10854,NJDEP			

Sample Information

Client Sample ID: SB-11-14.5-15.0'

York Sample ID: 16I0414-15

York Project (SDG) No.	Client Project ID	Matrix	Collection Date/Time	Date Received
16I0414	BEGS-Flatbush Ave Waterman Phase II 15-008-0265	Soil	September 9, 2016 12:15 pm	09/13/2016

Volatile Organics, 8260 - Comprehensive

Log-in Notes: VOA-CONT **Sample Notes:** VOA-CONT

Sample Prepared by Method: EPA 5035A

CAS No.	Parameter	Result	Flag	Units	Reported to LOD/MDL	LOQ	Dilution	Reference Method	Date/Time Prepared	Date/Time Analyzed	Analyst
96-18-4	1,2,3-Trichloropropane	ND		mg/kg dry	0.0029	0.0057	1	EPA 8260C Certifications: NELAC-NY10854,NJDEP	09/19/2016 17:34	09/20/2016 01:22	SS
120-82-1	1,2,4-Trichlorobenzene	ND		mg/kg dry	0.0029	0.0057	1	EPA 8260C Certifications: NELAC-NY10854,NJDEP	09/19/2016 17:34	09/20/2016 01:22	SS
95-63-6	1,2,4-Trimethylbenzene	ND		mg/kg dry	0.0029	0.0057	1	EPA 8260C Certifications: CTDOH,NELAC-NY10854,NJDEP	09/19/2016 17:34	09/20/2016 01:22	SS
96-12-8	1,2-Dibromo-3-chloropropane	ND		mg/kg dry	0.0029	0.0057	1	EPA 8260C Certifications: CTDOH,NELAC-NY10854,NJDEP	09/19/2016 17:34	09/20/2016 01:22	SS
106-93-4	1,2-Dibromoethane	ND		mg/kg dry	0.0029	0.0057	1	EPA 8260C Certifications: CTDOH,NELAC-NY10854,NJDEP	09/19/2016 17:34	09/20/2016 01:22	SS
95-50-1	1,2-Dichlorobenzene	ND		mg/kg dry	0.0029	0.0057	1	EPA 8260C Certifications: CTDOH,NELAC-NY10854,NJDEP,PADEP	09/19/2016 17:34	09/20/2016 01:22	SS
107-06-2	1,2-Dichloroethane	ND		mg/kg dry	0.0029	0.0057	1	EPA 8260C Certifications: CTDOH,NELAC-NY10854,NJDEP,PADEP	09/19/2016 17:34	09/20/2016 01:22	SS
78-87-5	1,2-Dichloropropane	ND		mg/kg dry	0.0029	0.0057	1	EPA 8260C Certifications: CTDOH,NELAC-NY10854,NJDEP	09/19/2016 17:34	09/20/2016 01:22	SS
108-67-8	1,3,5-Trimethylbenzene	ND		mg/kg dry	0.0029	0.0057	1	EPA 8260C Certifications: CTDOH,NELAC-NY10854,NJDEP	09/19/2016 17:34	09/20/2016 01:22	SS
541-73-1	1,3-Dichlorobenzene	ND		mg/kg dry	0.0029	0.0057	1	EPA 8260C Certifications: CTDOH,NELAC-NY10854,NJDEP,PADEP	09/19/2016 17:34	09/20/2016 01:22	SS
106-46-7	1,4-Dichlorobenzene	ND		mg/kg dry	0.0029	0.0057	1	EPA 8260C Certifications: CTDOH,NELAC-NY10854,NJDEP,PADEP	09/19/2016 17:34	09/20/2016 01:22	SS
123-91-1	1,4-Dioxane	ND		mg/kg dry	0.057	0.11	1	EPA 8260C Certifications: NELAC-NY10854,NJDEP	09/19/2016 17:34	09/20/2016 01:22	SS
78-93-3	2-Butanone	ND		mg/kg dry	0.0029	0.0057	1	EPA 8260C Certifications: CTDOH,NELAC-NY10854,NJDEP	09/19/2016 17:34	09/20/2016 01:22	SS
591-78-6	2-Hexanone	ND		mg/kg dry	0.0029	0.0057	1	EPA 8260C Certifications: CTDOH,NELAC-NY10854,NJDEP	09/19/2016 17:34	09/20/2016 01:22	SS
108-10-1	4-Methyl-2-pentanone	ND		mg/kg dry	0.0029	0.0057	1	EPA 8260C Certifications: CTDOH,NELAC-NY10854,NJDEP	09/19/2016 17:34	09/20/2016 01:22	SS
67-64-1	**Acetone**	**0.0067**	J	mg/kg dry	0.0057	0.011	1	EPA 8260C Certifications: CTDOH,NELAC-NY10854,NJDEP	09/19/2016 17:34	09/20/2016 01:22	SS
107-02-8	Acrolein	ND		mg/kg dry	0.0057	0.011	1	EPA 8260C Certifications: CTDOH,NELAC-NY10854,NJDEP	09/19/2016 17:34	09/20/2016 01:22	SS
107-13-1	Acrylonitrile	ND		mg/kg dry	0.0029	0.0057	1	EPA 8260C Certifications: CTDOH,NELAC-NY10854,NJDEP	09/19/2016 17:34	09/20/2016 01:22	SS
71-43-2	Benzene	ND		mg/kg dry	0.0029	0.0057	1	EPA 8260C Certifications: CTDOH,NELAC-NY10854,NJDEP,PADEP	09/19/2016 17:34	09/20/2016 01:22	SS
74-97-5	Bromochloromethane	ND		mg/kg dry	0.0029	0.0057	1	EPA 8260C Certifications: NELAC-NY10854,NJDEP	09/19/2016 17:34	09/20/2016 01:22	SS
75-27-4	Bromodichloromethane	ND		mg/kg dry	0.0029	0.0057	1	EPA 8260C Certifications: CTDOH,NELAC-NY10854,NJDEP,PADEP	09/19/2016 17:34	09/20/2016 01:22	SS
75-25-2	Bromoform	ND		mg/kg dry	0.0029	0.0057	1	EPA 8260C Certifications: CTDOH,NELAC-NY10854,NJDEP,PADEP	09/19/2016 17:34	09/20/2016 01:22	SS

Sample Information

Client Sample ID: SB-11-14.5-15.0' **York Sample ID:** 16I0414-15

York Project (SDG) No.	Client Project ID	Matrix	Collection Date/Time	Date Received
16I0414	BEGS-Flatbush Ave Waterman Phase II 15-008-0265	Soil	September 9, 2016 12:15 pm	09/13/2016

Volatile Organics, 8260 - Comprehensive

Log-in Notes: VOA-CONT **Sample Notes:** VOA-CONT

Sample Prepared by Method: EPA 5035A

CAS No.	Parameter	Result	Flag	Units	Reported to LOD/MDL	LOQ	Dilution	Reference Method	Date/Time Prepared	Date/Time Analyzed	Analyst
74-83-9	Bromomethane	ND		mg/kg dry	0.0029	0.0057	1	EPA 8260C Certifications: CTDOH,NELAC-NY10854,NJDEP,PADEP	09/19/2016 17:34	09/20/2016 01:22	SS
75-15-0	Carbon disulfide	ND		mg/kg dry	0.0029	0.0057	1	EPA 8260C Certifications: CTDOH,NELAC-NY10854,NJDEP	09/19/2016 17:34	09/20/2016 01:22	SS
56-23-5	Carbon tetrachloride	ND		mg/kg dry	0.0029	0.0057	1	EPA 8260C Certifications: CTDOH,NELAC-NY10854,NJDEP,PADEP	09/19/2016 17:34	09/20/2016 01:22	SS
108-90-7	Chlorobenzene	ND		mg/kg dry	0.0029	0.0057	1	EPA 8260C Certifications: CTDOH,NELAC-NY10854,NJDEP,PADEP	09/19/2016 17:34	09/20/2016 01:22	SS
75-00-3	Chloroethane	ND		mg/kg dry	0.0029	0.0057	1	EPA 8260C Certifications: CTDOH,NELAC-NY10854,NJDEP,PADEP	09/19/2016 17:34	09/20/2016 01:22	SS
67-66-3	Chloroform	ND		mg/kg dry	0.0029	0.0057	1	EPA 8260C Certifications: CTDOH,NELAC-NY10854,NJDEP,PADEP	09/19/2016 17:34	09/20/2016 01:22	SS
74-87-3	Chloromethane	ND		mg/kg dry	0.0029	0.0057	1	EPA 8260C Certifications: CTDOH,NELAC-NY10854,NJDEP,PADEP	09/19/2016 17:34	09/20/2016 01:22	SS
-59-2	cis-1,2-Dichloroethylene	ND		mg/kg dry	0.0029	0.0057	1	EPA 8260C Certifications: CTDOH,NELAC-NY10854,NJDEP	09/19/2016 17:34	09/20/2016 01:22	SS
10061-01-5	cis-1,3-Dichloropropylene	ND		mg/kg dry	0.0029	0.0057	1	EPA 8260C Certifications: CTDOH,NELAC-NY10854,NJDEP,PADEP	09/19/2016 17:34	09/20/2016 01:22	SS
110-82-7	Cyclohexane	ND		mg/kg dry	0.0029	0.0057	1	EPA 8260C Certifications: NELAC-NY10854,NJDEP	09/19/2016 17:34	09/20/2016 01:22	SS
124-48-1	Dibromochloromethane	ND		mg/kg dry	0.0029	0.0057	1	EPA 8260C Certifications: NELAC-NY10854,NJDEP,PADEP	09/19/2016 17:34	09/20/2016 01:22	SS
74-95-3	Dibromomethane	ND		mg/kg dry	0.0029	0.0057	1	EPA 8260C Certifications: NELAC-NY10854,NJDEP	09/19/2016 17:34	09/20/2016 01:22	SS
75-71-8	Dichlorodifluoromethane	ND		mg/kg dry	0.0029	0.0057	1	EPA 8260C Certifications: NELAC-NY10854,NJDEP	09/19/2016 17:34	09/20/2016 01:22	SS
100-41-4	Ethyl Benzene	ND		mg/kg dry	0.0029	0.0057	1	EPA 8260C Certifications: CTDOH,NELAC-NY10854,NJDEP,PADEP	09/19/2016 17:34	09/20/2016 01:22	SS
87-68-3	Hexachlorobutadiene	ND		mg/kg dry	0.0029	0.0057	1	EPA 8260C Certifications: NELAC-NY10854,NJDEP	09/19/2016 17:34	09/20/2016 01:22	SS
98-82-8	Isopropylbenzene	ND		mg/kg dry	0.0029	0.0057	1	EPA 8260C Certifications: CTDOH,NELAC-NY10854,NJDEP	09/19/2016 17:34	09/20/2016 01:22	SS
79-20-9	Methyl acetate	ND		mg/kg dry	0.0029	0.0057	1	EPA 8260C Certifications: NELAC-NY10854,NJDEP	09/19/2016 17:34	09/20/2016 01:22	SS
1634-04-4	Methyl tert-butyl ether (MTBE)	ND		mg/kg dry	0.0029	0.0057	1	EPA 8260C Certifications: CTDOH,NELAC-NY10854,NJDEP	09/19/2016 17:34	09/20/2016 01:22	SS
108-87-2	Methylcyclohexane	ND		mg/kg dry	0.0029	0.0057	1	EPA 8260C Certifications: NELAC-NY10854,NJDEP	09/19/2016 17:34	09/20/2016 01:22	SS
75-09-2	**Methylene chloride**	**0.0091**	J	mg/kg dry	0.0057	0.011	1	EPA 8260C Certifications: CTDOH,NELAC-NY10854,NJDEP,PADEP	09/19/2016 17:34	09/20/2016 01:22	SS
104-51-8	n-Butylbenzene	ND		mg/kg dry	0.0029	0.0057	1	EPA 8260C Certifications: CTDOH,NELAC-NY10854,NJDEP	09/19/2016 17:34	09/20/2016 01:22	SS
5-1	n-Propylbenzene	ND		mg/kg dry	0.0029	0.0057	1	EPA 8260C Certifications: CTDOH,NELAC-NY10854,NJDEP	09/19/2016 17:34	09/20/2016 01:22	SS

Sample Information

Client Sample ID: SB-11-14.5-15.0'

York Sample ID: 16I0414-15

York Project (SDG) No.	Client Project ID	Matrix	Collection Date/Time	Date Received
16I0414	BEGS-Flatbush Ave Waterman Phase II 15-008-0265	Soil	September 9, 2016 12:15 pm	09/13/2016

Volatile Organics, 8260 - Comprehensive

Log-in Notes: VOA-CONT **Sample Notes:** VOA-CONT

Sample Prepared by Method: EPA 5035A

CAS No.	Parameter	Result	Flag	Units	Reported to LOD/MDL	LOQ	Dilution	Reference Method	Date/Time Prepared	Date/Time Analyzed	Analyst
95-47-6	o-Xylene	ND		mg/kg dry	0.0029	0.0057	1	EPA 8260C Certifications: CTDOH,NELAC-NY10854	09/19/2016 17:34	09/20/2016 01:22	SS
179601-23-1	p- & m- Xylenes	ND		mg/kg dry	0.0057	0.011	1	EPA 8260C Certifications: CTDOH,NELAC-NY10854	09/19/2016 17:34	09/20/2016 01:22	SS
99-87-6	p-Isopropyltoluene	ND		mg/kg dry	0.0029	0.0057	1	EPA 8260C Certifications: CTDOH,NELAC-NY10854,NJDEP	09/19/2016 17:34	09/20/2016 01:22	SS
135-98-8	sec-Butylbenzene	ND		mg/kg dry	0.0029	0.0057	1	EPA 8260C Certifications: CTDOH,NELAC-NY10854,NJDEP	09/19/2016 17:34	09/20/2016 01:22	SS
100-42-5	Styrene	ND		mg/kg dry	0.0029	0.0057	1	EPA 8260C Certifications: CTDOH,NELAC-NY10854,NJDEP	09/19/2016 17:34	09/20/2016 01:22	SS
75-65-0	tert-Butyl alcohol (TBA)	ND		mg/kg dry	0.0029	0.0057	1	EPA 8260C Certifications: NELAC-NY10854,NJDEP	09/19/2016 17:34	09/20/2016 01:22	SS
98-06-6	tert-Butylbenzene	ND		mg/kg dry	0.0029	0.0057	1	EPA 8260C Certifications: CTDOH,NELAC-NY10854,NJDEP	09/19/2016 17:34	09/20/2016 01:22	SS
127-18-4	Tetrachloroethylene	ND		mg/kg dry	0.0029	0.0057	1	EPA 8260C Certifications: CTDOH,NELAC-NY10854,NJDEP,PADEP	09/19/2016 17:34	09/20/2016 01:22	SS
108-88-3	Toluene	ND		mg/kg dry	0.0029	0.0057	1	EPA 8260C Certifications: CTDOH,NELAC-NY10854,NJDEP,PADEP	09/19/2016 17:34	09/20/2016 01:22	SS
156-60-5	trans-1,2-Dichloroethylene	ND		mg/kg dry	0.0029	0.0057	1	EPA 8260C Certifications: CTDOH,NELAC-NY10854,NJDEP	09/19/2016 17:34	09/20/2016 01:22	SS
10061-02-6	trans-1,3-Dichloropropylene	ND		mg/kg dry	0.0029	0.0057	1	EPA 8260C Certifications: CTDOH,NELAC-NY10854,NJDEP,PADEP	09/19/2016 17:34	09/20/2016 01:22	SS
79-01-6	Trichloroethylene	ND		mg/kg dry	0.0029	0.0057	1	EPA 8260C Certifications: CTDOH,NELAC-NY10854,NJDEP,PADEP	09/19/2016 17:34	09/20/2016 01:22	SS
75-69-4	Trichlorofluoromethane	ND		mg/kg dry	0.0029	0.0057	1	EPA 8260C Certifications: CTDOH,NELAC-NY10854,NJDEP,PADEP	09/19/2016 17:34	09/20/2016 01:22	SS
75-01-4	Vinyl Chloride	ND		mg/kg dry	0.0029	0.0057	1	EPA 8260C Certifications: CTDOH,NELAC-NY10854,NJDEP,PADEP	09/19/2016 17:34	09/20/2016 01:22	SS
1330-20-7	Xylenes, Total	ND		mg/kg dry	0.0086	0.017	1	EPA 8260C Certifications: CTDOH,NELAC-NY10854,NJDEP,PADEP	09/19/2016 17:34	09/20/2016 01:22	SS

	Surrogate Recoveries	Result	Acceptance Range
17060-07-0	*Surrogate: 1,2-Dichloroethane-d4*	*108 %*	*77-125*
2037-26-5	*Surrogate: Toluene-d8*	*98.6 %*	*85-120*
460-00-4	*Surrogate: p-Bromofluorobenzene*	*94.8 %*	*76-130*

Total Solids

Log-in Notes: VOA-CONT **Sample Notes:**

Sample Prepared by Method: % Solids Prep

CAS No.	Parameter	Result	Flag	Units	LOD/MDL	Reported to LOQ	Dilution	Reference Method	Date/Time Prepared	Date/Time Analyzed	Analyst
solids	*** % Solids**	**87.3**		%	0.100	0.100	1	SM 2540G Certifications: CTDOH	09/19/2016 14:18	09/20/2016 08:04	LAB

Sample Information

Client Sample ID: SB-11-Comp

York Sample ID: 16I0414-16

York Project (SDG) No.	Client Project ID	Matrix	Collection Date/Time	Date Received
16I0414	BEGS-Flatbush Ave Waterman Phase II 15-008-0265	Soil	September 9, 2016 12:20 pm	09/13/2016

Semi-Volatiles, PAH Target List

Log-in Notes:

Sample Notes:

Sample Prepared by Method: EPA 3550C

CAS No.	Parameter	Result	Flag	Units	Reported to LOD/MDL	LOQ	Dilution	Reference Method	Date/Time Prepared	Date/Time Analyzed	Analyst
91-57-6	2-Methylnaphthalene	ND		mg/kg dry	0.0458	0.0913	2	EPA 8270D Certifications: CTDOH,NELAC-NY10854,NJDEP,PADEP	09/19/2016 11:58	09/20/2016 12:16	KH
83-32-9	Acenaphthene	ND		mg/kg dry	0.0458	0.0913	2	EPA 8270D Certifications: CTDOH,NELAC-NY10854,NJDEP,PADEP	09/19/2016 11:58	09/20/2016 12:16	KH
208-96-8	Acenaphthylene	ND		mg/kg dry	0.0458	0.0913	2	EPA 8270D Certifications: CTDOH,NELAC-NY10854,NJDEP,PADEP	09/19/2016 11:58	09/20/2016 12:16	KH
120-12-7	Anthracene	ND		mg/kg dry	0.0458	0.0913	2	EPA 8270D Certifications: CTDOH,NELAC-NY10854,NJDEP,PADEP	09/19/2016 11:58	09/20/2016 12:16	KH
56-55-3	Benzo(a)anthracene	ND		mg/kg dry	0.0458	0.0913	2	EPA 8270D Certifications: CTDOH,NELAC-NY10854,NJDEP,PADEP	09/19/2016 11:58	09/20/2016 12:16	KH
50-32-8	Benzo(a)pyrene	ND		mg/kg dry	0.0458	0.0913	2	EPA 8270D Certifications: CTDOH,NELAC-NY10854,NJDEP,PADEP	09/19/2016 11:58	09/20/2016 12:16	KH
205-99-2	Benzo(b)fluoranthene	ND		mg/kg dry	0.0458	0.0913	2	EPA 8270D Certifications: CTDOH,NELAC-NY10854,NJDEP,PADEP	09/19/2016 11:58	09/20/2016 12:16	KH
191-24-2	Benzo(g,h,i)perylene	ND		mg/kg dry	0.0458	0.0913	2	EPA 8270D Certifications: CTDOH,NELAC-NY10854,NJDEP,PADEP	09/19/2016 11:58	09/20/2016 12:16	KH
207-08-9	Benzo(k)fluoranthene	ND		mg/kg dry	0.0458	0.0913	2	EPA 8270D Certifications: CTDOH,NELAC-NY10854,NJDEP,PADEP	09/19/2016 11:58	09/20/2016 12:16	KH
218-01-9	Chrysene	ND		mg/kg dry	0.0458	0.0913	2	EPA 8270D Certifications: CTDOH,NELAC-NY10854,NJDEP,PADEP	09/19/2016 11:58	09/20/2016 12:16	KH
53-70-3	Dibenzo(a,h)anthracene	ND		mg/kg dry	0.0458	0.0913	2	EPA 8270D Certifications: CTDOH,NELAC-NY10854,NJDEP,PADEP	09/19/2016 11:58	09/20/2016 12:16	KH
206-44-0	Fluoranthene	ND		mg/kg dry	0.0458	0.0913	2	EPA 8270D Certifications: CTDOH,NELAC-NY10854,NJDEP,PADEP	09/19/2016 11:58	09/20/2016 12:16	KH
86-73-7	Fluorene	ND		mg/kg dry	0.0458	0.0913	2	EPA 8270D Certifications: NELAC-NY10854,NJDEP,PADEP	09/19/2016 11:58	09/20/2016 12:16	KH
193-39-5	Indeno(1,2,3-cd)pyrene	ND		mg/kg dry	0.0458	0.0913	2	EPA 8270D Certifications: CTDOH,NELAC-NY10854,NJDEP,PADEP	09/19/2016 11:58	09/20/2016 12:16	KH
91-20-3	Naphthalene	ND		mg/kg dry	0.0458	0.0913	2	EPA 8270D Certifications: CTDOH,NELAC-NY10854,NJDEP,PADEP	09/19/2016 11:58	09/20/2016 12:16	KH
85-01-8	Phenanthrene	ND		mg/kg dry	0.0458	0.0913	2	EPA 8270D Certifications: CTDOH,NELAC-NY10854,NJDEP,PADEP	09/19/2016 11:58	09/20/2016 12:16	KH
129-00-0	Pyrene	ND		mg/kg dry	0.0458	0.0913	2	EPA 8270D Certifications: CTDOH,NELAC-NY10854,NJDEP,PADEP	09/19/2016 11:58	09/20/2016 12:16	KH

	Surrogate Recoveries	Result	Acceptance Range
4165-60-0	*Surrogate: Nitrobenzene-d5*	*38.2 %*	*22-108*
321-60-8	*Surrogate: 2-Fluorobiphenyl*	*51.8 %*	*21-113*
1718-51-0	*Surrogate: Terphenyl-d14*	*46.7 %*	*24-116*

ychlorinated Biphenyls (PCB)

Log-in Notes:

Sample Notes:

Sample Information

Client Sample ID: SB-11-Comp

York Sample ID: 16I0414-16

York Project (SDG) No.	Client Project ID	Matrix	Collection Date/Time	Date Received
16I0414	BEGS-Flatbush Ave Waterman Phase II 15-008-0265	Soil	September 9, 2016 12:20 pm	09/13/2016

Sample Prepared by Method: EPA 3550C

CAS No.	Parameter	Result	Flag	Units	LOD/MDL	Reported to LOQ	Dilution	Reference Method	Date/Time Prepared	Date/Time Analyzed	Analyst
12674-11-2	Aroclor 1016	ND		mg/kg dry	0.0182	0.0182	1	EPA 8082A Certifications: NELAC-NY10854,CTDOH,NJDEP,PADEP	09/20/2016 07:11	09/20/2016 15:05	AMC
11104-28-2	Aroclor 1221	ND		mg/kg dry	0.0182	0.0182	1	EPA 8082A Certifications: NELAC-NY10854,CTDOH,NJDEP,PADEP	09/20/2016 07:11	09/20/2016 15:05	AMC
11141-16-5	Aroclor 1232	ND		mg/kg dry	0.0182	0.0182	1	EPA 8082A Certifications: NELAC-NY10854,CTDOH,NJDEP,PADEP	09/20/2016 07:11	09/20/2016 15:05	AMC
53469-21-9	Aroclor 1242	ND		mg/kg dry	0.0182	0.0182	1	EPA 8082A Certifications: NELAC-NY10854,CTDOH,NJDEP,PADEP	09/20/2016 07:11	09/20/2016 15:05	AMC
12672-29-6	Aroclor 1248	ND		mg/kg dry	0.0182	0.0182	1	EPA 8082A Certifications: NELAC-NY10854,CTDOH,NJDEP,PADEP	09/20/2016 07:11	09/20/2016 15:05	AMC
11097-69-1	Aroclor 1254	ND		mg/kg dry	0.0182	0.0182	1	EPA 8082A Certifications: NELAC-NY10854,CTDOH,NJDEP,PADEP	09/20/2016 07:11	09/20/2016 15:05	AMC
11096-82-5	Aroclor 1260	ND		mg/kg dry	0.0182	0.0182	1	EPA 8082A Certifications: NELAC-NY10854,CTDOH,NJDEP,PADEP	09/20/2016 07:11	09/20/2016 15:05	AMC
1336-36-3	* Total PCBs	ND		mg/kg dry	0.0182	0.0182	1	EPA 8082A Certifications:	09/20/2016 07:11	09/20/2016 15:05	AMC

	Surrogate Recoveries	Result	Acceptance Range
877-09-8	*Surrogate: Tetrachloro-m-xylene*	*96.5 %*	*30-140*
2051-24-3	*Surrogate: Decachlorobiphenyl*	*102 %*	*30-140*

Total Petroleum Hydrocarbons-DRO (C10-C28)

Log-in Notes:

Sample Notes:

Sample Prepared by Method: EPA 3550C

CAS No.	Parameter	Result	Flag	Units	LOD/MDL	Reported to LOQ	Dilution	Reference Method	Date/Time Prepared	Date/Time Analyzed	Analyst
	Total Petroleum Hydrocarbons-DRO	**38.4**		mg/kg dry	3.72	11.0	1	EPA 8015D Certifications: NELAC-NY10854,NJDEP,PADEP	09/19/2016 12:01	09/19/2016 21:59	AMC

	Surrogate Recoveries	Result	Acceptance Range
638-68-6	*Surrogate: Triacontane*	*75.5 %*	*30-150*

Total Petroleum Hydrocarbons-GRO (C5-C10)

Log-in Notes:

Sample Notes: VOA-CONT

Sample Prepared by Method: EPA 5035A

CAS No.	Parameter	Result	Flag	Units	LOD/MDL	Reported to LOQ	Dilution	Reference Method	Date/Time Prepared	Date/Time Analyzed	Analyst
	Total Petroleum Hydrocarbons-GRO	ND		mg/kg dry	43.8	87.6	100	EPA 8015D Certifications: NELAC-NY10854,NJDEP,PADEP	09/19/2016 15:46	09/20/2016 04:39	OW

	Surrogate Recoveries	Result	Acceptance Range
460-00-4	*Surrogate: p-Bromofluorobenzene*	*102 %*	*70-130*

Metals, TCLP RCRA

Log-in Notes:

Sample Notes:

Sample Prepared by Method: EPA 3015A/1311

CAS No.	Parameter	Result	Flag	Units	LOD/MDL	Reported to LOQ	Dilution	Reference Method	Date/Time Prepared	Date/Time Analyzed	Analy

Sample Information

Client Sample ID: SB-11-Comp

York Sample ID: 16I0414-16

York Project (SDG) No.	Client Project ID	Matrix	Collection Date/Time	Date Received
16I0414	BEGS-Flatbush Ave Waterman Phase II 15-008-0265	Soil	September 9, 2016 12:20 pm	09/13/2016

Metals, TCLP RCRA

Log-in Notes: **Sample Notes:**

Sample Prepared by Method: EPA 3015A/1311

CAS No.	Parameter	Result	Flag	Units	LOD/MDL	Reported to LOQ	Dilution	Reference Method	Date/Time Prepared	Date/Time Analyzed	Analyst
7440-38-2	**Arsenic**	**0.005**		mg/L	0.004	0.004	1	EPA 6010C/1311 Certifications: CTDOH,NELAC-NY10854,NJDEP,PADEP	09/16/2016 11:59	09/17/2016 02:28	ALD
7440-39-3	**Barium**	**0.263**		mg/L	0.011	0.011	1	EPA 6010C/1311 Certifications: CTDOH,NELAC-NY10854,NJDEP,PADEP	09/16/2016 11:59	09/17/2016 02:28	ALD
7440-43-9	Cadmium	ND		mg/L	0.003	0.003	1	EPA 6010C/1311 Certifications: CTDOH,NELAC-NY10854,NJDEP,PADEP	09/16/2016 11:59	09/17/2016 02:28	ALD
7440-47-3	Chromium	ND		mg/L	0.006	0.006	1	EPA 6010C/1311 Certifications: CTDOH,NELAC-NY10854,NJDEP,PADEP	09/16/2016 11:59	09/17/2016 02:28	ALD
7439-92-1	**Lead**	**0.035**		mg/L	0.003	0.003	1	EPA 6010C/1311 Certifications: CTDOH,NELAC-NY10854,NJDEP,PADEP	09/16/2016 11:59	09/17/2016 02:28	ALD
7782-49-2	Selenium	ND	M-SeTC	mg/L	0.011	0.011	1	EPA 6010C/1311 Certifications: CTDOH,NELAC-NY10854,NJDEP,PADEP	09/16/2016 11:59	09/17/2016 02:28	ALD
7440-22-4	Silver	ND		mg/L	0.006	0.006	1	EPA 6010C/1311 Certifications: CTDOH,NELAC-NY10854,NJDEP,PADEP	09/16/2016 11:59	09/17/2016 02:28	ALD

Mercury TCLP by 7473

Log-in Notes: **Sample Notes:**

Sample Prepared by Method: EPA 7473 water

CAS No.	Parameter	Result	Flag	Units	LOD/MDL	Reported to LOQ	Dilution	Reference Method	Date/Time Prepared	Date/Time Analyzed	Analyst
7439-97-6	Mercury	ND		mg/L	0.0000390	0.000200	1	EPA 7473/1311 Certifications: CTDOH,NJDEP,PADEP,NELAC-NY10854	09/16/2016 06:16	09/16/2016 14:16	ALD

Ignitability

Log-in Notes: **Sample Notes:**

Sample Prepared by Method: Analysis Preparation

CAS No.	Parameter	Result	Flag	Units	LOD/MDL	Reported to LOQ	Dilution	Reference Method	Date/Time Prepared	Date/Time Analyzed	Analyst
	* Ignitability	ND	U	-	1	1	1	EPA 1030P Certifications: CTDOH,PADEP	09/17/2016 20:49	09/18/2016 02:11	AA

Total Solids

Log-in Notes: **Sample Notes:**

Sample Prepared by Method: % Solids Prep

CAS No.	Parameter	Result	Flag	Units	LOD/MDL	Reported to LOQ	Dilution	Reference Method	Date/Time Prepared	Date/Time Analyzed	Analyst
solids	*** % Solids**	**91.3**		%	0.100	0.100	1	SM 2540G Certifications: CTDOH	09/19/2016 07:35	09/19/2016 14:01	LAB

Corrosivity

Log-in Notes: **Sample Notes:**

Sample Prepared by Method: Analysis Preparation

CAS No.	Parameter	Result	Flag	Units	LOD/MDL	Reported to LOQ	Dilution	Reference Method	Date/Time Prepared	Date/Time Analyzed	Analyst
	pH	**5.98**	HT-pH	pH units		0.500	1	EPA 9045D Certifications: NELAC-NY10854,CTDOH,PADEP	09/19/2016 07:55	09/19/2016 16:15	LAB

Sample Information

Client Sample ID: SB-11-Comp **York Sample ID:** 16I0414-16

York Project (SDG) No.	Client Project ID	Matrix	Collection Date/Time	Date Received
16I0414	BEGS-Flatbush Ave Waterman Phase II 15-008-0265	Soil	September 9, 2016 12:20 pm	09/13/2016

Reactivity-Cyanide

Log-in Notes: **Sample Notes:**

Sample Prepared by Method: Analysis Preparation

CAS No.	Parameter	Result	Flag	Units	LOD/MDL	Reported to LOQ	Dilution	Reference Method	Date/Time Prepared	Date/Time Analyzed	Analyst
	* Reactivity - Cyanide	ND		mg/kg	0.250	0.250	1	EPA SW-846 Ch.7.3.3	09/20/2016 10:46	09/20/2016 14:00	AD
								Certifications: CTDOH,PADEP			

Reactivity-Sulfide

Log-in Notes: **Sample Notes:**

Sample Prepared by Method: Analysis Preparation

CAS No.	Parameter	Result	Flag	Units	LOD/MDL	Reported to LOQ	Dilution	Reference Method	Date/Time Prepared	Date/Time Analyzed	Analyst
	*** Reactivity - Sulfide**	**40.0**		mg/kg	15.0	15.0	1	EPA SW-846 Ch.7.3.4	09/20/2016 10:47	09/20/2016 14:02	AD
								Certifications: CTDOH,PADEP			

TCLP Extraction for METALS EPA 1311

Log-in Notes: **Sample Notes:**

Sample Prepared by Method: EPA SW 846-1311 TCLP ext. for metals

CAS No.	Parameter	Result	Flag	Units	LOD/MDL	Reported to LOQ	Dilution	Reference Method	Date/Time Prepared	Date/Time Analyzed	Analyst
	TCLP Extraction	Completed		N/A	1.00	1.00	1	EPA 1311	09/14/2016 19:15	09/15/2016 12:18	TJM
								Certifications: NELAC-NY10854,CTDOH,NJDEP,PADEP			

Sample Information

Client Sample ID: SB-20-14.5-15.0' **York Sample ID:** 16I0414-17

York Project (SDG) No.	Client Project ID	Matrix	Collection Date/Time	Date Received
16I0414	BEGS-Flatbush Ave Waterman Phase II 15-008-0265	Soil	September 9, 2016 2:00 pm	09/13/2016

Volatile Organics, 8260 - Comprehensive

Log-in Notes: VOA-CONT **Sample Notes:** VOA-CONT

Sample Prepared by Method: EPA 5035A

CAS No.	Parameter	Result	Flag	Units	LOD/MDL	Reported to LOQ	Dilution	Reference Method	Date/Time Prepared	Date/Time Analyzed	Analyst
630-20-6	1,1,1,2-Tetrachloroethane	ND		mg/kg dry	0.0028	0.0055	1	EPA 8260C	09/19/2016 17:34	09/20/2016 01:53	SS
								Certifications: CTDOH,NELAC-NY10854,NJDEP			
71-55-6	1,1,1-Trichloroethane	ND		mg/kg dry	0.0028	0.0055	1	EPA 8260C	09/19/2016 17:34	09/20/2016 01:53	SS
								Certifications: CTDOH,NELAC-NY10854,NJDEP,PADEP			
79-34-5	1,1,2,2-Tetrachloroethane	ND		mg/kg dry	0.0028	0.0055	1	EPA 8260C	09/19/2016 17:34	09/20/2016 01:53	SS
								Certifications: CTDOH,NELAC-NY10854,NJDEP,PADEP			
76-13-1	1,1,2-Trichloro-1,2,2-trifluoroethane (Freon 113)	ND		mg/kg dry	0.0028	0.0055	1	EPA 8260C	09/19/2016 17:34	09/20/2016 01:53	SS
								Certifications: CTDOH,NELAC-NY10854,NJDEP			
79-00-5	1,1,2-Trichloroethane	ND		mg/kg dry	0.0028	0.0055	1	EPA 8260C	09/19/2016 17:34	09/20/2016 01:53	SS
								Certifications: CTDOH,NELAC-NY10854,NJDEP,PADEP			
75-34-3	1,1-Dichloroethane	ND		mg/kg dry	0.0028	0.0055	1	EPA 8260C	09/19/2016 17:34	09/20/2016 01:53	SS
								Certifications: CTDOH,NELAC-NY10854,NJDEP,PADEP			
75-35-4	1,1-Dichloroethylene	ND		mg/kg dry	0.0028	0.0055	1	EPA 8260C	09/19/2016 17:34	09/20/2016 01:53	SS
								Certifications: CTDOH,NELAC-NY10854,NJDEP,PADEP			
87-61-6	1,2,3-Trichlorobenzene	ND		mg/kg dry	0.0028	0.0055	1	EPA 8260C	09/19/2016 17:34	09/20/2016 01:53	SS
								Certifications: NELAC-NY10854,NJDEP			

Sample Information

Client Sample ID: SB-20-14.5-15.0' **York Sample ID:** 16I0414-17

York Project (SDG) No.	Client Project ID	Matrix	Collection Date/Time	Date Received
16I0414	BEGS-Flatbush Ave Waterman Phase II 15-008-0265	Soil	September 9, 2016 2:00 pm	09/13/2016

Volatile Organics, 8260 - Comprehensive **Log-in Notes:** VOA-CONT **Sample Notes:** VOA-CONT

Sample Prepared by Method: EPA 5035A

CAS No.	Parameter	Result	Flag	Units	Reported to LOD/MDL	LOQ	Dilution	Reference Method	Date/Time Prepared	Date/Time Analyzed	Analyst
96-18-4	1,2,3-Trichloropropane	ND		mg/kg dry	0.0028	0.0055	1	EPA 8260C Certifications: NELAC-NY10854,NJDEP	09/19/2016 17:34	09/20/2016 01:53	SS
120-82-1	1,2,4-Trichlorobenzene	ND		mg/kg dry	0.0028	0.0055	1	EPA 8260C Certifications: NELAC-NY10854,NJDEP	09/19/2016 17:34	09/20/2016 01:53	SS
95-63-6	1,2,4-Trimethylbenzene	ND		mg/kg dry	0.0028	0.0055	1	EPA 8260C Certifications: CTDOH,NELAC-NY10854,NJDEP	09/19/2016 17:34	09/20/2016 01:53	SS
96-12-8	1,2-Dibromo-3-chloropropane	ND		mg/kg dry	0.0028	0.0055	1	EPA 8260C Certifications: CTDOH,NELAC-NY10854,NJDEP	09/19/2016 17:34	09/20/2016 01:53	SS
106-93-4	1,2-Dibromoethane	ND		mg/kg dry	0.0028	0.0055	1	EPA 8260C Certifications: CTDOH,NELAC-NY10854,NJDEP	09/19/2016 17:34	09/20/2016 01:53	SS
95-50-1	1,2-Dichlorobenzene	ND		mg/kg dry	0.0028	0.0055	1	EPA 8260C Certifications: CTDOH,NELAC-NY10854,NJDEP,PADEP	09/19/2016 17:34	09/20/2016 01:53	SS
107-06-2	1,2-Dichloroethane	ND		mg/kg dry	0.0028	0.0055	1	EPA 8260C Certifications: CTDOH,NELAC-NY10854,NJDEP,PADEP	09/19/2016 17:34	09/20/2016 01:53	SS
[illegible]87-5	1,2-Dichloropropane	ND		mg/kg dry	0.0028	0.0055	1	EPA 8260C Certifications: CTDOH,NELAC-NY10854,NJDEP	09/19/2016 17:34	09/20/2016 01:53	SS
108-67-8	1,3,5-Trimethylbenzene	ND		mg/kg dry	0.0028	0.0055	1	EPA 8260C Certifications: CTDOH,NELAC-NY10854,NJDEP	09/19/2016 17:34	09/20/2016 01:53	SS
541-73-1	1,3-Dichlorobenzene	ND		mg/kg dry	0.0028	0.0055	1	EPA 8260C Certifications: CTDOH,NELAC-NY10854,NJDEP,PADEP	09/19/2016 17:34	09/20/2016 01:53	SS
106-46-7	1,4-Dichlorobenzene	ND		mg/kg dry	0.0028	0.0055	1	EPA 8260C Certifications: CTDOH,NELAC-NY10854,NJDEP,PADEP	09/19/2016 17:34	09/20/2016 01:53	SS
123-91-1	1,4-Dioxane	ND		mg/kg dry	0.055	0.11	1	EPA 8260C Certifications: NELAC-NY10854,NJDEP	09/19/2016 17:34	09/20/2016 01:53	SS
78-93-3	2-Butanone	ND		mg/kg dry	0.0028	0.0055	1	EPA 8260C Certifications: CTDOH,NELAC-NY10854,NJDEP	09/19/2016 17:34	09/20/2016 01:53	SS
591-78-6	2-Hexanone	ND		mg/kg dry	0.0028	0.0055	1	EPA 8260C Certifications: CTDOH,NELAC-NY10854,NJDEP	09/19/2016 17:34	09/20/2016 01:53	SS
108-10-1	4-Methyl-2-pentanone	ND		mg/kg dry	0.0028	0.0055	1	EPA 8260C Certifications: CTDOH,NELAC-NY10854,NJDEP	09/19/2016 17:34	09/20/2016 01:53	SS
67-64-1	Acetone	ND		mg/kg dry	0.0055	0.011	1	EPA 8260C Certifications: CTDOH,NELAC-NY10854,NJDEP	09/19/2016 17:34	09/20/2016 01:53	SS
107-02-8	Acrolein	ND		mg/kg dry	0.0055	0.011	1	EPA 8260C Certifications: CTDOH,NELAC-NY10854,NJDEP	09/19/2016 17:34	09/20/2016 01:53	SS
107-13-1	Acrylonitrile	ND		mg/kg dry	0.0028	0.0055	1	EPA 8260C Certifications: CTDOH,NELAC-NY10854,NJDEP	09/19/2016 17:34	09/20/2016 01:53	SS
71-43-2	Benzene	ND		mg/kg dry	0.0028	0.0055	1	EPA 8260C Certifications: CTDOH,NELAC-NY10854,NJDEP,PADEP	09/19/2016 17:34	09/20/2016 01:53	SS
74-97-5	Bromochloromethane	ND		mg/kg dry	0.0028	0.0055	1	EPA 8260C Certifications: NELAC-NY10854,NJDEP	09/19/2016 17:34	09/20/2016 01:53	SS
75-27-4	Bromodichloromethane	ND		mg/kg dry	0.0028	0.0055	1	EPA 8260C Certifications: CTDOH,NELAC-NY10854,NJDEP,PADEP	09/19/2016 17:34	09/20/2016 01:53	SS
[illegible]-2	Bromoform	ND		mg/kg dry	0.0028	0.0055	1	EPA 8260C Certifications: CTDOH,NELAC-NY10854,NJDEP,PADEP	09/19/2016 17:34	09/20/2016 01:53	SS

Sample Information

Client Sample ID: SB-20-14.5-15.0' **York Sample ID:** 16I0414-17

York Project (SDG) No.	Client Project ID	Matrix	Collection Date/Time	Date Received
16I0414	BEGS-Flatbush Ave Waterman Phase II 15-008-0265	Soil	September 9, 2016 2:00 pm	09/13/2016

Volatile Organics, 8260 - Comprehensive **Log-in Notes:** VOA-CONT **Sample Notes:** VOA-CONT

Sample Prepared by Method: EPA 5035A

CAS No.	Parameter	Result	Flag	Units	Reported to LOD/MDL	LOQ	Dilution	Reference Method	Date/Time Prepared	Date/Time Analyzed	Analyst
74-83-9	Bromomethane	ND		mg/kg dry	0.0028	0.0055	1	EPA 8260C Certifications: CTDOH,NELAC-NY10854,NJDEP,PADEP	09/19/2016 17:34	09/20/2016 01:53	SS
75-15-0	Carbon disulfide	ND		mg/kg dry	0.0028	0.0055	1	EPA 8260C Certifications: CTDOH,NELAC-NY10854,NJDEP	09/19/2016 17:34	09/20/2016 01:53	SS
56-23-5	Carbon tetrachloride	ND		mg/kg dry	0.0028	0.0055	1	EPA 8260C Certifications: CTDOH,NELAC-NY10854,NJDEP,PADEP	09/19/2016 17:34	09/20/2016 01:53	SS
108-90-7	Chlorobenzene	ND		mg/kg dry	0.0028	0.0055	1	EPA 8260C Certifications: CTDOH,NELAC-NY10854,NJDEP,PADEP	09/19/2016 17:34	09/20/2016 01:53	SS
75-00-3	Chloroethane	ND		mg/kg dry	0.0028	0.0055	1	EPA 8260C Certifications: CTDOH,NELAC-NY10854,NJDEP,PADEP	09/19/2016 17:34	09/20/2016 01:53	SS
67-66-3	Chloroform	ND		mg/kg dry	0.0028	0.0055	1	EPA 8260C Certifications: CTDOH,NELAC-NY10854,NJDEP,PADEP	09/19/2016 17:34	09/20/2016 01:53	SS
74-87-3	Chloromethane	ND		mg/kg dry	0.0028	0.0055	1	EPA 8260C Certifications: CTDOH,NELAC-NY10854,NJDEP,PADEP	09/19/2016 17:34	09/20/2016 01:53	SS
156-59-2	cis-1,2-Dichloroethylene	ND		mg/kg dry	0.0028	0.0055	1	EPA 8260C Certifications: CTDOH,NELAC-NY10854,NJDEP	09/19/2016 17:34	09/20/2016 01:53	SS
10061-01-5	cis-1,3-Dichloropropylene	ND		mg/kg dry	0.0028	0.0055	1	EPA 8260C Certifications: CTDOH,NELAC-NY10854,NJDEP,PADEP	09/19/2016 17:34	09/20/2016 01:53	SS
110-82-7	Cyclohexane	ND		mg/kg dry	0.0028	0.0055	1	EPA 8260C Certifications: NELAC-NY10854,NJDEP	09/19/2016 17:34	09/20/2016 01:53	SS
124-48-1	Dibromochloromethane	ND		mg/kg dry	0.0028	0.0055	1	EPA 8260C Certifications: NELAC-NY10854,NJDEP,PADEP	09/19/2016 17:34	09/20/2016 01:53	SS
74-95-3	Dibromomethane	ND		mg/kg dry	0.0028	0.0055	1	EPA 8260C Certifications: NELAC-NY10854,NJDEP	09/19/2016 17:34	09/20/2016 01:53	SS
75-71-8	Dichlorodifluoromethane	ND		mg/kg dry	0.0028	0.0055	1	EPA 8260C Certifications: NELAC-NY10854,NJDEP	09/19/2016 17:34	09/20/2016 01:53	SS
100-41-4	Ethyl Benzene	ND		mg/kg dry	0.0028	0.0055	1	EPA 8260C Certifications: CTDOH,NELAC-NY10854,NJDEP,PADEP	09/19/2016 17:34	09/20/2016 01:53	SS
87-68-3	Hexachlorobutadiene	ND		mg/kg dry	0.0028	0.0055	1	EPA 8260C Certifications: NELAC-NY10854,NJDEP	09/19/2016 17:34	09/20/2016 01:53	SS
98-82-8	Isopropylbenzene	ND		mg/kg dry	0.0028	0.0055	1	EPA 8260C Certifications: CTDOH,NELAC-NY10854,NJDEP	09/19/2016 17:34	09/20/2016 01:53	SS
79-20-9	Methyl acetate	ND		mg/kg dry	0.0028	0.0055	1	EPA 8260C Certifications: NELAC-NY10854,NJDEP	09/19/2016 17:34	09/20/2016 01:53	SS
1634-04-4	Methyl tert-butyl ether (MTBE)	ND		mg/kg dry	0.0028	0.0055	1	EPA 8260C Certifications: CTDOH,NELAC-NY10854,NJDEP	09/19/2016 17:34	09/20/2016 01:53	SS
108-87-2	Methylcyclohexane	ND		mg/kg dry	0.0028	0.0055	1	EPA 8260C Certifications: NELAC-NY10854,NJDEP	09/19/2016 17:34	09/20/2016 01:53	SS
75-09-2	**Methylene chloride**	**0.0090**	J	mg/kg dry	0.0055	0.011	1	EPA 8260C Certifications: CTDOH,NELAC-NY10854,NJDEP,PADEP	09/19/2016 17:34	09/20/2016 01:53	SS
104-51-8	n-Butylbenzene	ND		mg/kg dry	0.0028	0.0055	1	EPA 8260C Certifications: CTDOH,NELAC-NY10854,NJDEP	09/19/2016 17:34	09/20/2016 01:53	SS
103-65-1	n-Propylbenzene	ND		mg/kg dry	0.0028	0.0055	1	EPA 8260C Certifications: CTDOH,NELAC-NY10854,NJDEP	09/19/2016 17:34	09/20/2016 01:53	SS

Sample Information

Client Sample ID: SB-20-14.5-15.0'

York Sample ID: 16I0414-17

York Project (SDG) No.	Client Project ID	Matrix	Collection Date/Time	Date Received
16I0414	BEGS-Flatbush Ave Waterman Phase II 15-008-0265	Soil	September 9, 2016 2:00 pm	09/13/2016

Volatile Organics, 8260 - Comprehensive

Log-in Notes: VOA-CONT **Sample Notes:** VOA-CONT

Sample Prepared by Method: EPA 5035A

CAS No.	Parameter	Result	Flag	Units	Reported to LOD/MDL	LOQ	Dilution	Reference Method	Date/Time Prepared	Date/Time Analyzed	Analyst
95-47-6	o-Xylene	ND		mg/kg dry	0.0028	0.0055	1	EPA 8260C Certifications: CTDOH,NELAC-NY10854	09/19/2016 17:34	09/20/2016 01:53	SS
179601-23-1	p- & m- Xylenes	ND		mg/kg dry	0.0055	0.011	1	EPA 8260C Certifications: CTDOH,NELAC-NY10854	09/19/2016 17:34	09/20/2016 01:53	SS
99-87-6	p-Isopropyltoluene	ND		mg/kg dry	0.0028	0.0055	1	EPA 8260C Certifications: CTDOH,NELAC-NY10854,NJDEP	09/19/2016 17:34	09/20/2016 01:53	SS
135-98-8	sec-Butylbenzene	ND		mg/kg dry	0.0028	0.0055	1	EPA 8260C Certifications: CTDOH,NELAC-NY10854,NJDEP	09/19/2016 17:34	09/20/2016 01:53	SS
100-42-5	Styrene	ND		mg/kg dry	0.0028	0.0055	1	EPA 8260C Certifications: CTDOH,NELAC-NY10854,NJDEP	09/19/2016 17:34	09/20/2016 01:53	SS
75-65-0	tert-Butyl alcohol (TBA)	ND		mg/kg dry	0.0028	0.0055	1	EPA 8260C Certifications: NELAC-NY10854,NJDEP	09/19/2016 17:34	09/20/2016 01:53	SS
98-06-6	tert-Butylbenzene	ND		mg/kg dry	0.0028	0.0055	1	EPA 8260C Certifications: CTDOH,NELAC-NY10854,NJDEP	09/19/2016 17:34	09/20/2016 01:53	SS
[illegible]18-4	Tetrachloroethylene	ND		mg/kg dry	0.0028	0.0055	1	EPA 8260C Certifications: CTDOH,NELAC-NY10854,NJDEP,PADEP	09/19/2016 17:34	09/20/2016 01:53	SS
108-88-3	Toluene	ND		mg/kg dry	0.0028	0.0055	1	EPA 8260C Certifications: CTDOH,NELAC-NY10854,NJDEP,PADEP	09/19/2016 17:34	09/20/2016 01:53	SS
156-60-5	trans-1,2-Dichloroethylene	ND		mg/kg dry	0.0028	0.0055	1	EPA 8260C Certifications: CTDOH,NELAC-NY10854,NJDEP	09/19/2016 17:34	09/20/2016 01:53	SS
10061-02-6	trans-1,3-Dichloropropylene	ND		mg/kg dry	0.0028	0.0055	1	EPA 8260C Certifications: CTDOH,NELAC-NY10854,NJDEP,PADEP	09/19/2016 17:34	09/20/2016 01:53	SS
79-01-6	Trichloroethylene	ND		mg/kg dry	0.0028	0.0055	1	EPA 8260C Certifications: CTDOH,NELAC-NY10854,NJDEP,PADEP	09/19/2016 17:34	09/20/2016 01:53	SS
75-69-4	Trichlorofluoromethane	ND		mg/kg dry	0.0028	0.0055	1	EPA 8260C Certifications: CTDOH,NELAC-NY10854,NJDEP,PADEP	09/19/2016 17:34	09/20/2016 01:53	SS
75-01-4	Vinyl Chloride	ND		mg/kg dry	0.0028	0.0055	1	EPA 8260C Certifications: CTDOH,NELAC-NY10854,NJDEP,PADEP	09/19/2016 17:34	09/20/2016 01:53	SS
1330-20-7	Xylenes, Total	ND		mg/kg dry	0.0083	0.017	1	EPA 8260C Certifications: CTDOH,NELAC-NY10854,NJDEP,PADEP	09/19/2016 17:34	09/20/2016 01:53	SS

	Surrogate Recoveries	Result	Acceptance Range
17060-07-0	*Surrogate: 1,2-Dichloroethane-d4*	*102 %*	*77-125*
2037-26-5	*Surrogate: Toluene-d8*	*97.1 %*	*85-120*
460-00-4	*Surrogate: p-Bromofluorobenzene*	*94.2 %*	*76-130*

Total Solids

Log-in Notes: VOA-CONT **Sample Notes:**

Sample Prepared by Method: % Solids Prep

CAS No.	Parameter	Result	Flag	Units	LOD/MDL	Reported to LOQ	Dilution	Reference Method	Date/Time Prepared	Date/Time Analyzed	Analyst
solids	* % Solids	90.3		%	0.100	0.100	1	SM 2540G Certifications: CTDOH	09/19/2016 14:18	09/20/2016 08:04	LAB

Sample Information

Client Sample ID: SB-20-Comp

York Sample ID: 16I0414-18

York Project (SDG) No.	Client Project ID	Matrix	Collection Date/Time	Date Received
16I0414	BEGS-Flatbush Ave Waterman Phase II 15-008-0265	Soil	September 9, 2016 2:10 pm	09/13/2016

Semi-Volatiles, PAH Target List

Log-in Notes:

Sample Notes:

Sample Prepared by Method: EPA 3550C

CAS No.	Parameter	Result	Flag	Units	Reported to LOD/MDL	LOQ	Dilution	Reference Method	Date/Time Prepared	Date/Time Analyzed	Analyst
91-57-6	2-Methylnaphthalene	ND		mg/kg dry	0.0468	0.0935	2	EPA 8270D Certifications: CTDOH,NELAC-NY10854,NJDEP,PADEP	09/19/2016 11:58	09/20/2016 12:48	KH
83-32-9	Acenaphthene	ND		mg/kg dry	0.0468	0.0935	2	EPA 8270D Certifications: CTDOH,NELAC-NY10854,NJDEP,PADEP	09/19/2016 11:58	09/20/2016 12:48	KH
208-96-8	Acenaphthylene	ND		mg/kg dry	0.0468	0.0935	2	EPA 8270D Certifications: CTDOH,NELAC-NY10854,NJDEP,PADEP	09/19/2016 11:58	09/20/2016 12:48	KH
120-12-7	Anthracene	ND		mg/kg dry	0.0468	0.0935	2	EPA 8270D Certifications: CTDOH,NELAC-NY10854,NJDEP,PADEP	09/19/2016 11:58	09/20/2016 12:48	KH
56-55-3	Benzo(a)anthracene	ND		mg/kg dry	0.0468	0.0935	2	EPA 8270D Certifications: CTDOH,NELAC-NY10854,NJDEP,PADEP	09/19/2016 11:58	09/20/2016 12:48	KH
50-32-8	Benzo(a)pyrene	ND		mg/kg dry	0.0468	0.0935	2	EPA 8270D Certifications: CTDOH,NELAC-NY10854,NJDEP,PADEP	09/19/2016 11:58	09/20/2016 12:48	KH
205-99-2	Benzo(b)fluoranthene	ND		mg/kg dry	0.0468	0.0935	2	EPA 8270D Certifications: CTDOH,NELAC-NY10854,NJDEP,PADEP	09/19/2016 11:58	09/20/2016 12:48	KH
191-24-2	Benzo(g,h,i)perylene	ND		mg/kg dry	0.0468	0.0935	2	EPA 8270D Certifications: CTDOH,NELAC-NY10854,NJDEP,PADEP	09/19/2016 11:58	09/20/2016 12:48	KH
207-08-9	Benzo(k)fluoranthene	ND		mg/kg dry	0.0468	0.0935	2	EPA 8270D Certifications: CTDOH,NELAC-NY10854,NJDEP,PADEP	09/19/2016 11:58	09/20/2016 12:48	KH
218-01-9	Chrysene	ND		mg/kg dry	0.0468	0.0935	2	EPA 8270D Certifications: CTDOH,NELAC-NY10854,NJDEP,PADEP	09/19/2016 11:58	09/20/2016 12:48	KH
53-70-3	Dibenzo(a,h)anthracene	ND		mg/kg dry	0.0468	0.0935	2	EPA 8270D Certifications: CTDOH,NELAC-NY10854,NJDEP,PADEP	09/19/2016 11:58	09/20/2016 12:48	KH
206-44-0	Fluoranthene	ND		mg/kg dry	0.0468	0.0935	2	EPA 8270D Certifications: CTDOH,NELAC-NY10854,NJDEP,PADEP	09/19/2016 11:58	09/20/2016 12:48	KH
86-73-7	Fluorene	ND		mg/kg dry	0.0468	0.0935	2	EPA 8270D Certifications: NELAC-NY10854,NJDEP,PADEP	09/19/2016 11:58	09/20/2016 12:48	KH
193-39-5	Indeno(1,2,3-cd)pyrene	ND		mg/kg dry	0.0468	0.0935	2	EPA 8270D Certifications: CTDOH,NELAC-NY10854,NJDEP,PADEP	09/19/2016 11:58	09/20/2016 12:48	KH
91-20-3	Naphthalene	ND		mg/kg dry	0.0468	0.0935	2	EPA 8270D Certifications: CTDOH,NELAC-NY10854,NJDEP,PADEP	09/19/2016 11:58	09/20/2016 12:48	KH
85-01-8	Phenanthrene	ND		mg/kg dry	0.0468	0.0935	2	EPA 8270D Certifications: CTDOH,NELAC-NY10854,NJDEP,PADEP	09/19/2016 11:58	09/20/2016 12:48	KH
129-00-0	Pyrene	ND		mg/kg dry	0.0468	0.0935	2	EPA 8270D Certifications: CTDOH,NELAC-NY10854,NJDEP,PADEP	09/19/2016 11:58	09/20/2016 12:48	KH

	Surrogate Recoveries	Result	Acceptance Range
4165-60-0	*Surrogate: Nitrobenzene-d5*	*39.6 %*	*22-108*
321-60-8	*Surrogate: 2-Fluorobiphenyl*	*53.6 %*	*21-113*
1718-51-0	*Surrogate: Terphenyl-d14*	*51.7 %*	*24-116*

Polychlorinated Biphenyls (PCB)

Log-in Notes:

Sample Notes:

Sample Information

Client Sample ID: SB-20-Comp

York Sample ID: 16I0414-18

York Project (SDG) No.	Client Project ID	Matrix	Collection Date/Time	Date Received
16I0414	BEGS-Flatbush Ave Waterman Phase II 15-008-0265	Soil	September 9, 2016 2:10 pm	09/13/2016

Sample Prepared by Method: EPA 3550C

CAS No.	Parameter	Result	Flag	Units	LOD/MDL	Reported to LOQ	Dilution	Reference Method	Date/Time Prepared	Date/Time Analyzed	Analyst
12674-11-2	Aroclor 1016	ND		mg/kg dry	0.0187	0.0187	1	EPA 8082A Certifications: NELAC-NY10854,CTDOH,NJDEP,PADEP	09/20/2016 07:11	09/20/2016 15:19	AMC
11104-28-2	Aroclor 1221	ND		mg/kg dry	0.0187	0.0187	1	EPA 8082A Certifications: NELAC-NY10854,CTDOH,NJDEP,PADEP	09/20/2016 07:11	09/20/2016 15:19	AMC
11141-16-5	Aroclor 1232	ND		mg/kg dry	0.0187	0.0187	1	EPA 8082A Certifications: NELAC-NY10854,CTDOH,NJDEP,PADEP	09/20/2016 07:11	09/20/2016 15:19	AMC
53469-21-9	Aroclor 1242	ND		mg/kg dry	0.0187	0.0187	1	EPA 8082A Certifications: NELAC-NY10854,CTDOH,NJDEP,PADEP	09/20/2016 07:11	09/20/2016 15:19	AMC
12672-29-6	Aroclor 1248	ND		mg/kg dry	0.0187	0.0187	1	EPA 8082A Certifications: NELAC-NY10854,CTDOH,NJDEP,PADEP	09/20/2016 07:11	09/20/2016 15:19	AMC
11097-69-1	Aroclor 1254	ND		mg/kg dry	0.0187	0.0187	1	EPA 8082A Certifications: NELAC-NY10854,CTDOH,NJDEP,PADEP	09/20/2016 07:11	09/20/2016 15:19	AMC
11096-82-5	Aroclor 1260	ND		mg/kg dry	0.0187	0.0187	1	EPA 8082A Certifications: NELAC-NY10854,CTDOH,NJDEP,PADEP	09/20/2016 07:11	09/20/2016 15:19	AMC
1336-36-3	* Total PCBs	ND		mg/kg dry	0.0187	0.0187	1	EPA 8082A Certifications:	09/20/2016 07:11	09/20/2016 15:19	AMC

	Surrogate Recoveries	Result	Acceptance Range
877-09-8	*Surrogate: Tetrachloro-m-xylene*	*90.5 %*	*30-140*
2051-24-3	*Surrogate: Decachlorobiphenyl*	*96.5 %*	*30-140*

Total Petroleum Hydrocarbons-DRO (C10-C28)

Log-in Notes:

Sample Notes:

Sample Prepared by Method: EPA 3550C

CAS No.	Parameter	Result	Flag	Units	LOD/MDL	Reported to LOQ	Dilution	Reference Method	Date/Time Prepared	Date/Time Analyzed	Analyst
	Total Petroleum Hydrocarbons-DRO	**52.9**		mg/kg dry	3.81	11.2	1	EPA 8015D Certifications: NELAC-NY10854,NJDEP,PADEP	09/19/2016 12:01	09/19/2016 22:29	AMC

	Surrogate Recoveries	Result	Acceptance Range
638-68-6	*Surrogate: Triacontane*	*85.1 %*	*30-150*

Total Petroleum Hydrocarbons-GRO (C5-C10)

Log-in Notes:

Sample Notes: VOA-CONT

Sample Prepared by Method: EPA 5035A

CAS No.	Parameter	Result	Flag	Units	LOD/MDL	Reported to LOQ	Dilution	Reference Method	Date/Time Prepared	Date/Time Analyzed	Analyst
	Total Petroleum Hydrocarbons-GRO	ND		mg/kg dry	44.8	89.6	100	EPA 8015D Certifications: NELAC-NY10854,NJDEP,PADEP	09/19/2016 15:46	09/20/2016 05:17	OW

	Surrogate Recoveries	Result	Acceptance Range
460-00-4	*Surrogate: p-Bromofluorobenzene*	*101 %*	*70-130*

Metals, TCLP RCRA

Log-in Notes:

Sample Notes:

Sample Prepared by Method: EPA 3015A/1311

CAS No.	Parameter	Result	Flag	Units	LOD/MDL	Reported to LOQ	Dilution	Reference Method	Date/Time Prepared	Date/Time Analyzed	Analyst

Sample Information

Client Sample ID: SB-20-Comp

York Sample ID: 16I0414-18

York Project (SDG) No.	Client Project ID	Matrix	Collection Date/Time	Date Received
16I0414	BEGS-Flatbush Ave Waterman Phase II 15-008-0265	Soil	September 9, 2016 2:10 pm	09/13/2016

Metals, TCLP RCRA

Log-in Notes: **Sample Notes:**

Sample Prepared by Method: EPA 3015A/1311

CAS No.	Parameter	Result	Flag	Units	LOD/MDL	Reported to LOQ	Dilution	Reference Method	Date/Time Prepared	Date/Time Analyzed	Analyst
7440-38-2	Arsenic	ND		mg/L	0.004	0.004	1	EPA 6010C/1311	09/16/2016 11:59	09/17/2016 02:33	ALD
								Certifications: CTDOH,NELAC-NY10854,NJDEP,PADEP			
7440-39-3	**Barium**	**0.301**		mg/L	0.011	0.011	1	EPA 6010C/1311	09/16/2016 11:59	09/17/2016 02:33	ALD
								Certifications: CTDOH,NELAC-NY10854,NJDEP,PADEP			
7440-43-9	Cadmium	ND		mg/L	0.003	0.003	1	EPA 6010C/1311	09/16/2016 11:59	09/17/2016 02:33	ALD
								Certifications: CTDOH,NELAC-NY10854,NJDEP,PADEP			
7440-47-3	**Chromium**	**0.009**		mg/L	0.006	0.006	1	EPA 6010C/1311	09/16/2016 11:59	09/17/2016 02:33	ALD
								Certifications: CTDOH,NELAC-NY10854,NJDEP,PADEP			
7439-92-1	**Lead**	**0.021**		mg/L	0.003	0.003	1	EPA 6010C/1311	09/16/2016 11:59	09/17/2016 02:33	ALD
								Certifications: CTDOH,NELAC-NY10854,NJDEP,PADEP			
7782-49-2	Selenium	ND	M-SeTC	mg/L	0.011	0.011	1	EPA 6010C/1311	09/16/2016 11:59	09/17/2016 02:33	ALD
								Certifications: CTDOH,NELAC-NY10854,NJDEP,PADEP			
7440-22-4	Silver	ND		mg/L	0.006	0.006	1	EPA 6010C/1311	09/16/2016 11:59	09/17/2016 02:33	ALD
								Certifications: CTDOH,NELAC-NY10854,NJDEP,PADEP			

Mercury TCLP by 7473

Log-in Notes: **Sample Notes:**

Sample Prepared by Method: EPA 7473 water

CAS No.	Parameter	Result	Flag	Units	LOD/MDL	Reported to LOQ	Dilution	Reference Method	Date/Time Prepared	Date/Time Analyzed	Analyst
7439-97-6	Mercury	ND		mg/L	0.0000390	0.000200	1	EPA 7473/1311	09/16/2016 06:16	09/16/2016 14:16	ALD
								Certifications: CTDOH,NJDEP,PADEP,NELAC-NY10854			

Ignitability

Log-in Notes: **Sample Notes:**

Sample Prepared by Method: Analysis Preparation

CAS No.	Parameter	Result	Flag	Units	LOD/MDL	Reported to LOQ	Dilution	Reference Method	Date/Time Prepared	Date/Time Analyzed	Analyst
	* Ignitability	ND	U	-	1	1	1	EPA 1030P	09/17/2016 20:49	09/18/2016 02:11	AA
								Certifications: CTDOH,PADEP			

Total Solids

Log-in Notes: **Sample Notes:**

Sample Prepared by Method: % Solids Prep

CAS No.	Parameter	Result	Flag	Units	LOD/MDL	Reported to LOQ	Dilution	Reference Method	Date/Time Prepared	Date/Time Analyzed	Analyst
solids	*** % Solids**	**89.2**		%	0.100	0.100	1	SM 2540G	09/19/2016 07:35	09/19/2016 14:01	LAB
								Certifications: CTDOH			

Corrosivity

Log-in Notes: **Sample Notes:**

Sample Prepared by Method: Analysis Preparation

CAS No.	Parameter	Result	Flag	Units	LOD/MDL	Reported to LOQ	Dilution	Reference Method	Date/Time Prepared	Date/Time Analyzed	Analyst
	pH	**6.29**	HT-pH	pH units		0.500	1	EPA 9045D	09/20/2016 14:13	09/20/2016 16:22	DM
								Certifications: NELAC-NY10854,CTDOH,PADEP			

Sample Information

Client Sample ID: SB-20-Comp

York Sample ID: 16I0414-18

York Project (SDG) No.	Client Project ID	Matrix	Collection Date/Time	Date Received
16I0414	BEGS-Flatbush Ave Waterman Phase II 15-008-0265	Soil	September 9, 2016 2:10 pm	09/13/2016

Reactivity-Cyanide

Log-in Notes: **Sample Notes:**

Sample Prepared by Method: Analysis Preparation

CAS No.	Parameter	Result	Flag	Units	LOD/MDL	Reported to LOQ	Dilution	Reference Method	Date/Time Prepared	Date/Time Analyzed	Analyst
	* Reactivity - Cyanide	ND		mg/kg	0.250	0.250	1	EPA SW-846 Ch.7.3.3	09/20/2016 10:46	09/20/2016 14:00	AD
								Certifications: CTDOH,PADEP			

Reactivity-Sulfide

Log-in Notes: **Sample Notes:**

Sample Prepared by Method: Analysis Preparation

CAS No.	Parameter	Result	Flag	Units	LOD/MDL	Reported to LOQ	Dilution	Reference Method	Date/Time Prepared	Date/Time Analyzed	Analyst
	*** Reactivity - Sulfide**	**16.0**		mg/kg	15.0	15.0	1	EPA SW-846 Ch.7.3.4	09/20/2016 10:47	09/20/2016 14:02	AD
								Certifications: CTDOH,PADEP			

TCLP Extraction for METALS EPA 1311

Log-in Notes: **Sample Notes:**

Sample Prepared by Method: EPA SW 846-1311 TCLP ext. for metals

CAS No.	Parameter	Result	Flag	Units	LOD/MDL	Reported to LOQ	Dilution	Reference Method	Date/Time Prepared	Date/Time Analyzed	Analyst
	TCLP Extraction	Completed		N/A	1.00	1.00	1	EPA 1311	09/14/2016 19:15	09/15/2016 12:18	TJM
								Certifications: NELAC-NY10854,CTDOH,NJDEP,PADEP			

Volatile Analysis Sample Containers

Lab ID	Client Sample ID	Volatile Sample Container
16I0414-01	SB-06-14.5-15.0'	4 oz. WM Clear Glass Cool to 4° C
16I0414-02	SB-06-Comp	8 oz. WM Clear Glass Cool to 4° C
16I0414-03	SB-07-14.5-15.0'	4 oz. WM Clear Glass Cool to 4° C
16I0414-04	SB-07-Comp	8 oz. WM Clear Glass Cool to 4° C
16I0414-05	SB-08-12.5-13.0'	4 oz. WM Clear Glass Cool to 4° C
16I0414-06	SB-08-Comp	8 oz. WM Clear Glass Cool to 4° C
16I0414-07	SB-09-9.5-10.0'	4 oz. WM Clear Glass Cool to 4° C
16I0414-08	SB-09-Comp	8 oz. WM Clear Glass Cool to 4° C
16I0414-09	SB-18-17.5-18.0'	4 oz. WM Clear Glass Cool to 4° C
16I0414-10	SB-18-Comp	8 oz. WM Clear Glass Cool to 4° C
16I0414-11	SB-12-14.5-15.0'	4 oz. WM Clear Glass Cool to 4° C
16I0414-12	SB-12-Comp	8 oz. WM Clear Glass Cool to 4° C
16I0414-13	SB-13-14.5-15.0'	4 oz. WM Clear Glass Cool to 4° C
16I0414-14	SB-13-Comp	8 oz. WM Clear Glass Cool to 4° C
16I0414-15	SB-11-14.5-15.0'	4 oz. WM Clear Glass Cool to 4° C
16I0414-16	SB-11-Comp	8 oz. WM Clear Glass Cool to 4° C
16I0414-17	SB-20-14.5-15.0'	4 oz. WM Clear Glass Cool to 4° C
16I0414-18	SB-20-Comp	8 oz. WM Clear Glass Cool to 4° C

Notes and Definitions

VOA-CONT	NON-COMPLIANT- the container(s) provided by the client for soil volatiles do not meet the requirements of EPA SW846-5035A. Results reported below 200 ug/kg may be biased low due to samples not being collected according to EPA SW846 5035A requirements.
U	Analyte included in the analysis, but not detected
SCAL-E	The value reported is ESTIMATED. The value is estimated due to its behavior during initial calibration (average Rf>20%).
QM-07	The spike recovery was outside acceptance limits for the MS and/or MSD. The batch was accepted based on acceptable LCS recovery.
QL-03	This LCS analyte recovered outside of acceptance limits. The LCS contains approximately 70 compounds, a limited number of which may be outside acceptance windows.
M-SeTC	It is noted that a known interference with selenium at the analytical line for analysis by ICP is caused by carbon emission from the TCLP or high organics matrix. The data user may subtract the matrix blank value from the data if needed.
J	Detected below the Reporting Limit but greater than or equal to the Method Detection Limit (MDL/LOD) or in the case of a TIC, the result is an estimated concentration.
IGN-01	Non-Ignit.
HT-pH	HOLDING TIME EXCEEDED. Samples for pH must be measured in the field or within 15 minutes of sample collection.
EXT-COMP	Completed
CCV-E	The value reported is ESTIMATED. The value is estimated due to its behavior during continuing calibration verification (>20% Difference for average Rf or >20% Drift for quadratic fit).
Cal-E	The value reported is ESTIMATED. The value is estimated due to its behavior during initial calibration (average Rf>20%)
B	Analyte is found in the associated analysis batch blank. For volatiles, methylene chloride and acetone are common lab contaminants.

---

*	Analyte is not certified or the state of the samples origination does not offer certification for the Analyte.
ND	NOT DETECTED - the analyte is not detected at the Reported to level (LOQ/RL or LOD/MDL)
RL	REPORTING LIMIT - the minimum reportable value based upon the lowest point in the analyte calibration curve.
LOQ	LIMIT OF QUANTITATION - the minimum concentration of a target analyte that can be reported within a specified degree of confidence. This is the lowest point in an analyte calibration curve that has been subjected to all steps of the processing/analysis and verified to meet defined criteria. This is based upon NELAC 2009 Standards and applies to all analyses.
LOD	LIMIT OF DETECTION - a verified estimate of the minimum concentration of a substance in a given matrix that an analytical process can reliably detect. This is based upon NELAC 2009 Standards and applies to all analyses conducted under the auspices of EPA SW-846.
MDL	METHOD DETECTION LIMIT - a statistically derived estimate of the minimum amount of a substance an analytical system can reliably detect with a 99% confidence that the concentration of the substance is greater than zero. This is based upon 40 CFR Part 136 Appendix B and applies only to EPA 600 and 200 series methods.
Reported to	This indicates that the data for a particular analysis is reported to either the LOD/MDL, or the LOQ/RL. In cases where the "Reported to" is located above the LOD/MDL, any value between this and the LOQ represents an estimated value which is "J" flagged accordingly. This applies to volatile and semi-volatile target compounds only.
NR	Not reported
RPD	Relative Percent Difference
Wet	The data has been reported on an as-received (wet weight) basis
Low Bias	Low Bias flag indicates that the recovery of the flagged analyte is below the laboratory or regulatory lower control limit. The data user should take note that this analyte may be biased low but should evaluate multiple lines of evidence including the LCS and site-specific MS/MSD data to draw bias conclusions. In cases where no site-specific MS/MSD was requested, only the LCS data can be used to evaluate such bias.

High Bias — High Bias flag indicates that the recovery of the flagged analyte is above the laboratory or regulatory upper control limit. The data user should take note that this analyte may be biased high but should evaluate multiple lines of evidence including the LCS and site-specific MS/MSD data to draw bias conclusions. In cases where no site-specific MS/MSD was requested, only the LCS data can be used to evaluate such bias.

Non-Dir. — Non-dir. flag (Non-Directional Bias) indicates that the Relative Percent Difference (RPD) (a measure of precision) among the MS and MSD data is outside the laboratory or regulatory control limit. This alerts the data user where the MS and MSD are from site-specific samples that the RPD is high due to either non-homogeneous distribution of target analyte between the MS/MSD or indicates poor reproducibility for other reasons.

If EPA SW-846 method 8270 is included herein it is noted that the target compound N-nitrosodiphenylamine (NDPA) decomposes in the gas chromatographic inlet and cannot be separated from diphenylamine (DPA). These results could actually represent 100% DPA, 100% NDPA or some combination of the two.
For this reason, York reports the combined result for n-nitrosodiphenylamine and diphenylamine for either of these compounds as a combined concentration as Diphenylamine.

If Total PCBs are detected and the target aroclors reported are "Not detected", the Total PCB value is reported due to the presence of either or both Aroclors 1262 and 1268 which are non-target aroclors for some regulatory lists.

2-chloroethylvinyl ether readily breaks down under acidic conditions. Samples that are acid preserved, including standards will exhibit breakdown. The data user should take note.

Certification for pH is no longer offered by NYDOH ELAP.

Semi-Volatile and Volatile analyses are reported down to the LOD/MDL, with values between the LOD/MDL and the LOQ being "J" flagged as estimated results.

For analyses by EPA SW-846-8270D, the Limit of Quantitation (LOQ) reported for benzidine is based upon the lowest standard used for calibration and is not a verified LOQ due to this compound's propensity for oxidative losses during extraction/concentration procedures and non-reproducible chromatographic performance.

YORK ANALYTICAL LABORATORIES
120 RESEARCH DR.
STRATFORD, CT 06615
(203) 325-1371
FAX (203) 357-0166

Field Chain-of-Custody Record

NOTE: York's Std. Terms & Conditions are listed on the back side of this document. This document serves as your written authorization to York to proceed with the analyses requested and your signature binds you to York's Std. Terms & Conditions.

York Project No. 16I0414

YOUR Information	Report To:	Invoice To:	YOUR Project ID	Turn-Around Time	Report Type
Company: Liro Engineers	Company: Liro Engineers	Company:	BEGS - Flatbush Ave Water Main Phase II	RUSH - Same Day ☐	Summary Report ✓
Address: 703 Sumner str. Brooklyn NY 11211	Address: 690 Delaware Ave Buffalo, NY	Address: same as report to	OEGS-15-008-0065	RUSH - Next Day ☐	Summary w/ QA Summary
Phone No.	Phone No. 716 882 9645	Phone No.	Purchase Order No. —	RUSH - Two Day ☐	CT RCP Package
Contact Person: E. Jakubowska	Attention: Amy Hewson	Attention:	Samples from: CT___ NY✓ NJ___	RUSH - Three Day ☐	CTRCP DQA/DUE Pkg
E-Mail Address: —	E-Mail Address: hewsona@liro.com	E-Mail Address:		RUSH - Four Day ☐	NY ASP A Package
				Standard (5-7 Days) ☒	NY ASP B Package
					NJDEP Red. Deliv.
					Electronic Data Deliverables (EDD)
					Simple Excel ✓
					NYSDEC EQuIS
					EQuIS (std)
					EZ-EDD (EQuIS)
					NJDEP SRP HazSite EDD
					GIS/KEY (std)
					Other PDF
					York Regulatory Comparison
					Excel Spreadsheet
					Compare to the following Regs. (please fill in):

Print Clearly and Legibly. All Information must be complete. Samples will NOT be logged in and the turn-around time clock will not begin until any questions by York are resolved.

Eva [signature]
Samples Collected/Authorized By (Signature)

EVA JAKUBOWSKA
Name (printed)

HAZ. - 26

Matrix Codes
S - soil
Other - specify(oil, etc.)
WW - wastewater
GW - groundwater
DW - drinking water
Air-A - ambient air
Air-SV - soil vapor

Volatiles		Semi-Vols.	Pest/PCB/Herb	Metals	Misc. Org.	Full Lists	Misc.
8260 full	TICs	8270 or 625	8082PCB	RCRA8	TPH GRO	Pri.Poll.	Corrosivity
624	Site Spec.	STARS list	8081Pest	PP13 list	TPH DRO	TCL Organics	Reactivity
STARS list	Nassau Co.	BN Only	8151Herb	TAL	CT ETPH	TAL Met/CN	Ignitability
BTEX	Suffolk Co.	Acids Only	CT RCP	CT15 list	NY 310-13	Full TCLP	Flash Point
MTBE	Ketones	PAH list	App. IX	TAGM list	TPH 1664	Full App. IX	Sieve Anal.
TCL list	Oxygenates	TAGM list	Site Spec.	NJDEP list	Air TO14A	Part360-Routine	Heterotrophs
TAGM list	TCLP list	CT RCP list	SPLP or TCLP	Total	Air TO15	Part360-Baseline	TOX
CT RCP list	524.2	TCL list	TCLP Pest	Dissolved	Air STARS	Part360-Expanded No Dioxin/Furans	BTU/lb.
Arom. only	502.2	NJDEP list	TCLP Herb	SPLP or TCLP	Air VPH	Part360-Expanded Full List	Aquatic Tox.
Halog.only	NJDEP list	App. IX	Chlordane	Inorg.Metals	Air TICs	NYCDEP Sewer	TOC
App.IX list	SPLP or TCLP	TCLP BNA	608 Pest	LIST Below	Methane	NYSDEC Sewer	Asbestos
8021B list		SPLP or TCLP	608 PCB		Helium	TAGM	Silica

Sample Identification	Date/Time Sampled	Sample Matrix	Choose Analyses Needed from the Menu Above and Enter Below	Container Description(s)
SB-06-14.5-15.0'	9/12/16 1130	soil	TCL VOCs, PAHs, PCBs, TPHC DRO/GRO, RCRA characteristics, TCLP RCRA metals.	4oz & 2x8oz.
SB-06-comp	1140	soil		
SB-07-14.5-15.0'	1300	soil		
SB-07-comp	1310			
SB-08-12.5-13.0'	1350			
SB-08-comp	1400			
SB-09-9.5-10.0'	1430			
SB-09-comp	1440			
SB-18-17.5-18.0'	1000			
SB-18-comp	1010			

Comments
4oz. jar - TCL VOCs only
2x8oz jars everything else

Preservation Check those Applicable: 4°C ✓ Frozen ✓ HCl ___ MeOH ___ HNO3 ___ H2SO4 ___ NaOH ___ ZnAc ___ Ascorbic Acid ___ Other ___

Special Instructions
Field Filtered ☐
Lab to Filter ☐

Samples Relinquished By	Date/Time	Samples Received By	Date/Time
Eva [signature]	9/13/16	[signature]	9-13-16 11:42
Samples Relinquished By	Date/Time	Samples Received in LAB by	Date/Time
		[signature]	9/13/16 1842

Temperature on Receipt 9.9 °C

YORK ANALYTICAL LABORATORIES
120 RESEARCH DR.
STRATFORD, CT 06615
(203) 325-1371
FAX (203) 357-0166

Field Chain-of-Custody Record

NOTE: York's Std. Terms & Conditions are listed on the back side of this document.
This document serves as your written authorization to York to proceed with the analyses requested and your signature binds you to York's Std. Terms & Conditions.

York Project No. 16I0414

YOUR Information	Report To:	Invoice To:	YOUR Project ID	Turn-Around Time	Report Type
Company: LIRO	Company: LIRO Engineering	Company:	BEGS-DEGS 12-008-0265	RUSH - Same Day ☐	Summary Report ✓
Address: 703 Grimmer St. Brooklyn, NY	Address: 690 Delaware Buffalo, NY	Address: same as report to	Purchase Order No. —	RUSH - Next Day ☐	Summary w/ QA Summary
Phone No. —	Phone No. 716 882 9664	Phone No.		RUSH - Two Day ☐	CT RCP Package
Contact Person: E. Jakubowska	Attention: Amy Hewson	Attention:		RUSH - Three Day ☐	CTRCP DQA/DUE Pkg
E-Mail Address: —	E-Mail Address: hewsona@liro.com	E-Mail Address:	Samples from: CT___ NY ✓ NJ___	RUSH - Four Day ☐	NY ASP A Package
				Standard (5-7 Days) ✓	NY ASP B Package
					NJDEP Red. Deliv.
					Electronic Data Deliverables (EDD)
					Simple Excel
					NYSDEC EQuIS
					EQuIS (std)
					EZ-EDD (EQuIS)
					NJDEP SRP HazSite EDD
					GIS/KEY (std)
					Other PDF
					York Regulatory Comparison
					Excel Spreadsheet
					Compare to the following Regs. (please fill in):

Print Clearly and Legibly. All Information must be complete. Samples will NOT be logged in and the turn-around time clock will not begin until any questions by York are resolved.

Eva
Samples Collected/Authorized By (Signature)

EVA JAKUBOWSKA
Name (printed)

HAZ. - 26

Matrix Codes
S - soil
Other - specify(oil, etc.)
WW - wastewater
GW - groundwater
DW - drinking water
Air-A - ambient air
Air-SV - soil vapor

Volatiles		Semi-Vols.	Pest/PCB/Herb	Metals	Misc. Org.	Full Lists	Misc.
8260 full	TICs	8270 or 625	8082PCB	RCRA8	TPH GRO	Pri.Poll.	Corrosivity
624	Site Spec.	STARS list	8081Pest	PP13 list	TPH DRO	TCL Organics	Reactivity
STARS list	Nassau Co.	BN Only	8151Herb	TAL	CT ETPH	TAL Met/CN	Ignitability
BTEX	Suffolk Co.	Acids Only	CT RCP	CT15 list	NY 310-13	Full TCLP	Flash Point
MTBE	Ketones	PAH list	App. IX	TAGM list	TPH 1664	Full App. IX	Sieve Anal.
TCL list	Oxygenates	TAGM list	Site Spec.	NJDEP list	Air TO14A	Part 360-Routine	Heterotrophs
TAGM list	TCLP list	CT RCP list	SPLP or TCLP	Total	Air TO15	Part 360-Baseline	TOX
CT RCP list	524.2	TCL list	TCLP Pest	Dissolved	Air STARS	Part 360-Expanded No Dioxin/Furans	BTU/lb.
Arom. only	502.2	NJDEP list	TCLP Herb	SPLP or TCLP	Air VPH	Part 360-Expanded Full List	Aquatic Tox.
Halog.only	NJDEP list	App. IX	Chlordane	Indiv. Metals	Air TICs	NYCDEP Sewer	TOC
App.IX list	SPLP or TCLP	TCLP BNA	608 Pest	LIST Below	Methane	NYSDEC Sewer	Asbestos
8021B list		SPLP or TCLP	608 PCB		Helium	TAGM	Silica

Sample Identification	Date/Time Sampled		Sample Matrix	Choose Analyses Needed from the Menu Above and Enter Below	Container Description(s)
SB-12-14.5-15.0'	9/9/16	1245	soil	TCL VOCs, PAHs, PCBs, TPHC DRO/GRO, RCRA Characteristics, TCLP RCRA Metals	4oz. & 2×8oz.
SB-12-comp		1250	soil		
SB-13-14.5-15.0'		1315	soil		
SB-13-comp		1320			
SB-11-14.5-15.0'		1215			
SB-11-comp		1220			
SB-20-14.5-15.0'		1400			
SB-20-comp		1410			

Comments
4oz. jar - TCL VOCs only
×8oz. jar - everything else

Preservation Check those Applicable: 4°C ✓ Frozen ___ HCl ___ MeOH ___ HNO_3 ___ H_2SO_4 ___ NaOH ___ Zn Ac ___ Ascorbic Acid ___ Other ___

Special Instructions
Field Filtered ☐
Lab to Filter ☐

Eva — 9/13/16 — Samples Relinquished By — Date/Time
9/13/16 1:42 — Samples Received By — Date/Time
Samples Relinquished By — Date/Time
9/13/16 1842 — Samples Received in LAB by — Date/Time

Temperature on Receipt 9.9 °C

ASB - PAGES

SPECIFICATIONS FOR ABATEMENT OF TRANSIT AUTHORITY DUCT INSULATION ASBESTOS CONTAINING MATERIALS

NOTICE

THE PAGES CONTAINED IN THIS SECTION ARE ISSUED FOR THE PURPOSE OF SPECIFYING THE REQUIREMENTS OF THE CONTRACT DOCUMENTS AND HEREBY MADE PART OF SAID CONTRACT DOCUMENTS.

Abatement of Transit Authority Duct Insulation Asbestos Containing Materials ASSOCIATED WITH THE REPLACEMENT OF TRUNK AND DISTRIBUTION WATER MAINS, COMBINED SEWER AND APPURTENANCES IN FLATBUSH AVENUE BETWEEN STERLING PLACE AND 8TH AVENUE, ETC.
BOROUGH OF BROOKLYN

Prepared By:

Bureau of Environmental and Geotechnical Services
30-30 Thomson Avenue, 5th Floor
Long Island City, New York 11101

Revision #: 00 or Final Submission
Date: July 15, 2011

(NO TEXT ON THIS PAGE)

TABLE OF CONTENTS

Section 79.11	Allowance For Asbestos Abatement Work Performed On Existing Transit Authority Duct Insulation (Removal Of Asbestos-Containing Materials, Replacement With Non-Asbestos-Containing Materials, And Support And Protection Of Existing Transit Authority Duct, Complete)	ASB-2
79.11.1	General	ASB -2
79.11.1.1	Description	ASB -2
79.11.1.2	Scope Of Work	ASB -2
79.11.1.3	Special Experience Requirements For Asbestos Abatement	ASB -4
79.11.1.4	Work By Others	ASB -6
79.11.1.5	Definitions	ASB -6
79.11.1.6	Standard Operating Procedures	ASB -12
79.11.1.7	Notifications, Permits, Warning Signs, Labels, And Posters	ASB -14
79.11.1.8	Emergency Precautions	ASB -14
79.11.1.9	Submittals	ASB -14
79.11.1.10	Quality Assurance	ASB -17
79.11.1.11	City/Contractor Responsibilities	ASB -19
79.11.1.12	Use Of The Area	ASB -19
79.11.1.13	Protection And Damage	ASB -20
79.11.1.14	Respiratory Protection Requirements	ASB -20
79.11.1.15	Protective Clothing	ASB -22
79.11.1.16	Air Monitoring - Contractor	ASB -23
79.11.1.17	Testing Laboratory	ASB -24
79.11.1.18	Tampering With Test Equipment	ASB -26
79.11.2	Products	ASB -26
79.11.2.1	Materials	ASB -26
79.11.2.2	Tools And Equipment	ASB -27
79.11.2.3	Cleaning	ASB -28
79.11.3	Execution	ASB -29
79.11.3.1	Worker Decontamination Facility	ASB -29
79.11.3.2	Waste Decontamination Facility	ASB -31
79.11.3.3	Personnel Entrance And Decontamination Procedures For Removal Operations Utilizing Remote Decontamination Facilities	ASB -33
79.11.4	Preparation Of Work Area And Removal Procedures	ASB -33
79.11.4.1	Removal Of Asbestos-Containing Material	ASB -33
79.11.4.2	Maintenance Of Contained Work Area And Decontamination Enclosure Systems	ASB -34
79.11.5	Asbestos Waste Management	ASB -33
79.11.5.1	ACM Waste Requirements	ASB -33
79.11.6	Acceptance	ASB -38
79.11.6.1	Acceptance	ASB -38
79.11.7	Measurement And Payment	ASB -38

Appendix - NYCDEP Attachments	41
Attachment TM - Requirements For Modified Tent Procedures (For Gross Abatement)	42
Attachment D - Remote Worker Decontamination Unit	43
Attachment - Asbestos Containing Duct Insulation Removal Procedure	44

SECTION 79.11
ALLOWANCE FOR ASBESTOS ABATEMENT WORK PERFORMED ON EXISTING TRANSIT AUTHORITY DUCT INSULATION (REMOVAL OF ASBESTOS-CONTAINING MATERIALS, REPLACEMENT WITH NON-ASBESTOS-CONTAINING MATERIALS, AND SUPPORT AND PROTECTION OF EXISTING TRANSIT AUTHORITY DUCT, COMPLETE)

79.11.1 GENERAL

79.11.1.1 DESCRIPTION

(A) The contract documents are as defined in the "Standard Construction Contract". The General Construction Provisions of the Standard Sewer And Water Main Specifications shall apply to all work of this section.

(B) Work specified herein shall be as follows:
   (1) The removal and disposal of Asbestos-Containing Materials (ACM) and asbestos-contaminated duct insulation from existing Transit Authority duct that are exposed due to other contract work.
   (2) The replacement of the removed ACM insulation with a Transit Authority approved non-asbestos-containing materials insulation.
   (3) The support and protection of the existing Transit Authority duct that are exposed and to remain in service at all times.

(C) The phasing and scheduling of work for this project shall be coordinated with and approved by the Engineer. The Engineer will make the final determination on all issues under this contract covered by this specification in coordination with NYC Department of Design and Construction's Bureau of Environmental and Geotechnical Services (BEGS).

79.11.1.2 SCOPE OF WORK

(A) The Contractor is to provide all labor, materials, equipment, services, testing, appurtenances, permits and agreements necessary to perform the work required for the removal and disposal of ACM and asbestos-contaminated duct insulation from existing Transit Authority duct that are exposed, the replacement of the removed ACM insulation with a Transit Authority approved non-asbestos containing materials insulation, and the support and protection of the existing Transit Authority duct that are exposed and to remain in service at all times as required by these contract documents.

All work shall be performed in accordance with this specification, EPA regulations, OSHA regulations, New York City Local Law 70, Title 15, Chapter 1 RCNY, New York State Industrial Code 56, NIOSH recommendations, and any other applicable federal, state or local government regulations. Whenever there is a conflict or overlap of the above references the most stringent provisions are applicable.

The work to be performed in order to replace the removed ACM insulation with a Transit Authority approved non-asbestos containing materials insulation, and to support and protection the existing Transit Authority duct that are exposed and to remain in service at all times shall be done in accordance with Transit Authority specifications, standards and requirements.

(B) The intent of this section is to ensure that the Contractor is responsible for the following:

   (1) Abatement of all exposed ACM.

   (2) Cleaning and decontamination of the entire affected area.

   (3) Removal of sections of ACM duct insulation, as necessary. The Contractor shall dispose of all debris associated with such removal activities as ACM waste.

   (4) Removal and disposal of all exposed ACM found within these areas such as soil within excavated area, and duct insulation, etc.

(5) Replacement of the removed ACM insulation with a Transit Authority approved non-asbestos-containing materials insulation.

(6) Support and protection of the existing Transit Authority duct that are exposed and to remain in service at all times.

(7) Provide all scaffolding, platform installation, equipment, tools, transportation and any other equipment required and/or necessary to complete all work described in the contract documents.

(8) The Contractor shall be responsible for acquiring all permits required to perform this work, and paying any and all fees or changes imposed by Local, State or Federal Law, Rule or Regulation applicable to the work specified herein.

(C) The extent of the work areas requiring this work shall be as ordered by the Engineer. The Contractor shall perform the following work as described below:

WORK AREA EXCAVATION:

(1) Remove and dispose of asbestos-containing duct insulation within the work area. Asbestos-containing duct insulation shall be removed utilizing the approved NYCDEP procedure outlined below. Variance for utilizing this procedure within the work area shall be applied for by the Contractor and approved by the New York City Department of Environmental Protection (NYCDEP) prior to the start of abatement activities. In areas where duct insulation is to be removed, the Contractor shall be responsible to remove all duct insulation material within the soil below the area where the duct insulation has to be removed. All duct insulation and associated materials as well as impacted soil shall be disposed of as contaminated waste.

(2) Replacement of the removed ACM insulation with a Transit Authority approved non-asbestos-containing materials insulation, including all inspection, testing, etc. required.

(3) Support and protection of the existing Transit authority duct that are exposed and to remain in service at all times, including the design and submittal of all support and protection drawings required for approval by all appropriate agencies.

(D) The Contractor's attention is directed to the fact that patents cover certain methods of asbestos abatement indicated in the specifications. To date, patents have been issued with regard to negative pressure enclosures or negative or reduced pressure and glove-bag.

(E) The Contractor shall be solely responsible for and shall hold the City of New York Department of Design and Construction and the City harmless from any and all damages, losses and expenses resulting from any infringement by Contractor of any patent including, but not limited to, the patents described above, used by Contractor during performance of this agreement.

(F) Prior to starting abatement work, the Contractor must notify the Commissioner of the City of New York Department of Design and Construction if the Contractor anticipates any difficulty in performing the work as directed and required by these specifications. The Contractor shall be required to attend an on-site job meeting with the Engineer prior to start of abatement work to examine conditions of the site for removal and plan the sequence for removal operations.

(G) The Contractor is responsible for amending the Asbestos Inspection Report (ACP-7) and resubmitting it to the NYCDEP Asbestos Control Program prior to abatement work as per Title 15, Chapter 1 of RCNY for any changes in quantities and/or starting date.

(H) If more than one (1) year has elapsed since the original ACP-7 was submitted to the Department of Environmental Protection, the Contractor is responsible for preparing and submitting a new ACP-7 to

the Department of Environmental Protection as well as providing all other notifications to various regulatory agencies as required.

(I) In addition, the Contractor is also responsible for preparing, amending and submitting any Asbestos Variance Applications (ACP-9) that may be required for the completion of the contract or incidental work.

(J) The Contractor is also responsible for preparing and submitting all filings, notifications, etc. required by all City, State and Federal regulatory agencies having jurisdiction.

(K) For coordination with other contractors, see the General Provisions governing all contracts.

(L) Related Asbestos Removal Work Under Other Contracts:

(1) Each contractor shall be responsible for the removal of incidental asbestos not identified in this section and found prior to or during the work.

(2) Incidental asbestos is defined as ACM that is discovered during the course of their work that must be abated to enable contractors to perform the work of their contract.

(M) Work Hours:

(1) The Contractor shall establish the Contractor's work schedule in a way that avoids interference or conflict with the normal activities of the area.

(2) All work shall be done during regular working hours unless the Contractor requests authorization to work in other than regular working hours and such authorization is granted by the Commissioner. (Regular working hours are those during which any given facility in which work is to be done is customarily open and functioning).

(3) The order of phases and start dates associated with each will be determined by the Engineer.

(4) Waste transfer must be approved by the Engineer.

(N) Stages Of Asbestos Removal Work:

The Abatement Contractor or Subcontractor will be required to perform the work and it is the intent of this specification to remove all asbestos-containing and asbestos contaminated materials from the work area impeding and/or impacting the installation of any portion of the trunk water main connection. The Contractor shall inform the Engineer prior to start of this work in order that the Engineer can verify all work and quantities. No payment for this work will be made unless verified by the Engineer in writing.

(O) Certain equipment in the work area may need to remain operational during removal. Therefore, the removal of ACM from this equipment shall be performed as the last removal activities within the work area. The Contractor shall coordinate the scheduling for the removal of ACM on functioning equipment with the Engineer.

79.11.1.3 SPECIAL EXPERIENCE REQUIREMENTS FOR ASBESTOS ABATEMENT

(A) General: The special experience requirements set forth in Paragraph (B) below apply to the contractor who will be performing the Asbestos Abatement work under this contract. If the bidder intends to perform such work itself, it must demonstrate compliance with the special experience requirements. If the bidder intends to subcontract this work, the proposed subcontractor must demonstrate compliance with the special experience requirements. Once approved, no substitution will be permitted, unless the qualifications of the proposed replacement have been approved in writing in advance by the City.

(1) Evaluation: Compliance with the special experience requirements for Asbestos Abatement must be submitted for evaluation a minimum of thirty (30) days prior to commencement of that phase of work which may require removal of asbestos-containing duct insulation. The Contractor is advised that the Contractor will not be permitted to commence excavation work at the site for that phase of construction which may require possible removal of asbestos-containing duct insulation, should the Contractor's Asbestos Abatement contractor fail to comply with the special experience requirements. Compliance with the experience requirements set forth herein will be determined solely by the City.

(2) Compliance By The Asbestos Abatement Contractor As An Entity: Compliance with the special experience requirements must be demonstrated by the Asbestos Abatement contractor. The Asbestos Abatement contractor itself must have been in existence as the same entity for the three (3) year period prior to the bid opening. During such period, the entity itself must have achieved compliance with the special experience requirements. The Asbestos Abatement contractor entity may not use or rely on the experience or credentials of any other entity regardless of any relationship such other entity may have to the Asbestos Abatement contractor.

(B) Requirements: The Asbestos Abatement contractor must demonstrate compliance with the special experience requirements set forth in subparagraphs (1) through (5) below. The Asbestos Abatement contractor must submit documentation demonstrating compliance with all listed requirements. Such documentation shall include without limitation, all required licenses, certificates, and documentation.

(1) The Asbestos Abatement contractor must, whether an individual, corporation, partnership, joint venture or other legal entity, demonstrate for the three (3) year period prior to the bid opening, that it has been licensed by the New York State Department of Labor, as an "Asbestos Contractor".

(2) The Asbestos Abatement contractor must, for the three (3) year period prior to the bid opening, have been in the business of providing asbestos abatement services as a routine part of its daily operations. In addition, the Asbestos Abatement contractor must have on staff a certified Project Designer for the purpose of submitting regulatory filings with the NYSDOL and/or NYCDEP involving variances.

(3) The Asbestos Abatement contractor proposing to do asbestos abatement work must be thoroughly experienced in such work and must provide evidence of having successfully performed and completed in a timely fashion at least five (5) asbestos abatement projects of similar size and complexity. The aggregate cost of these projects must be at least $1,000,000 in each of the three (3) years.

(4) For each project submitted to meet the experience requirements set forth above, the Asbestos Abatement contractor must submit the following information for the project: name and location of the project; name title and telephone number of the owner or the owner's representative who is familiar with the Asbestos Abatement contractor's work; brief description of the work completed as a prime or sub-contractor; amount of contract or subcontract; and, the date of completion.

(5) The Asbestos Abatement contractor must demonstrate that it has the financial resources, supervisory personnel and equipment necessary to carry out the work and to comply with the required performance schedule, taking into consideration other business commitments. The Asbestos Abatement contractor must submit such documentation as may be required by the Department of Design and Construction to demonstrate that it has the requisite capacity to perform the required services of this contract.

(C) Throughout the specifications, reference is made to codes and standards which establish qualities and types of workmanship and materials, methods for testing and reporting on the pertinent characteristics thereof to provide materials or workmanship that meet or exceed the specifically named codes or standards where required by these specifications.

(D) Site Investigation: The Contractor shall inspect all the specifications and related drawings, and will investigate and confirm the site conditions affecting the work, including, but not limited to:

(1) Physical considerations and conditions of both the material and structure. These considerations include any obstacles or obstructions encountered in accessing or removing the material.

(2) Handling, storage, transportation and disposal of the material.

(3) Availability of qualified and skilled labor.

(4) Availability of utilities.

(5) Exact quantities of all materials to be disturbed and/or removed.

79.11.1.4 WORK BY OTHERS

The City reserves the right during the term of this contract to have work performed on asbestos abatement projects by other contractors as the situation warrants.

79.11.1.5 DEFINITIONS

(A) General Explanation: Certain terms used in this specification are defined below. Definitions and explanations of this specification are not necessarily complete or exclusive, but are general for the work to the extent they are not stated more explicitly in another element of the contract documents.

(B) Definitions In General Use:

(1) Approve: Where used in conjunction with Engineer's response to submittals, requests, applications, inquiries, reports and claims by Contractor, the meaning of term "approved" will be held to limitations of Engineer's responsibilities and duties as specified in contract documents. In no case will "approval" by Engineer be interpreted as a release of Contractor from responsibilities to fulfill requirements of contract documents.

(2) Directed, Requested, Etc.: Where not otherwise explained, terms such as "directed," "requested," "authorized," "selected," "approved," "required," "accepted," and "permitted" mean "directed by Engineer," "requested by Engineer," and similar phrases. However, no such implied meaning will be interpreted to extend Engineer's responsibility into Contractor's responsibility for construction supervision.

(3) Furnish: Except as otherwise defined in greater detail, term "furnish" is used to mean supply and deliver to project site, ready for unloading, unpacking, assembly, installation, etc., as applicable in each instance.

(4) Indicated: The term "indicated" is a cross-reference to graphic representations, notes or schedules on drawings, to other paragraphs or schedules in the specifications, and to similar means of recording requirements in contract documents. Where terms such as "shown," "noted," "scheduled," and "specified" are used in lieu of "indicated," it is for purpose of helping reader locate cross-reference, and no limitation of location is intended except as specifically noted.

(5) Install: Except as otherwise defined in greater detail, term "install" is used to describe operations at project site including unloading, unpacking, assembly, erection, placing, anchoring, applying, working to dimension, finishing, curing, protecting, cleaning and similar operations, as applicable in each instance.

(6) Installer: The term "installer" is defined as the entity (person or firm) engaged by Contractor, or its subcontractor or sub-subcontractor for performance of a particular unit of work at project site, including installation, erection, application and similar required operations. It is a general requirement that such entities (installers) be expert in operations they are engaged to perform.

(7) Provide: Except as otherwise defined in greater detail, term "provide" means furnish and install, complete and ready for intended use, as applicable in each instance.

(8) Testing Laboratory: The term "Testing Laboratory" is defined as an entity engaged by the City to perform specific inspections or tests of the work, either at project site or elsewhere; and to report and (if required) interpret results of those inspections or tests.

(C) Definitions Relative To Asbestos Abatement:

(1) Abatement: Procedures physically taken to control fiber release from ACM. This includes removal, encapsulation, enclosure, and repair.

(2) Aggressive Sampling: Method of sampling in which the individual collecting the air sample creates activity by the use of mechanical equipment during the sampling period to stir up settled dust and simulate activity in that area of the building.

(3) AIHA: American Industrial Hygiene Association.

(4) Airlock: System for permitting entrance and exit while restricting air movement between a contaminated area and an uncontaminated area. It consists of two (2) curtained doorways separated by a distance of at least three (3) feet such that one passes through one doorway into the airlock, allowing the doorway sheeting to overlap and close off the opening before proceeding through the second doorway, thereby preventing flow-through contamination.

(5) Air Sampling: Process of measuring the fiber content of a known volume of air collected during a specific period. The procedure utilized for asbestos follows the NIOSH Standard Analytical Method 7400, or the provisional transmission electron microscopy methods developed by the US EPA which is utilized for lower detection levels and specific fiber identification.

(6) Amended Water: Water to which a surfactant has been added.

(7) ANSI: American National Standards Institute.

(8) Area Air Sampling: Any form of air sampling or monitoring where the sampling device is placed at some stationary location.

(9) Asbestos: Any hydrated mineral silicate separable into commercially usable fibers, including but not limited to chrysotile (serpentine), amosite (cumingtonite-grunerite), crocidolite (riebeckite), tremolite, anthophyllite and actinolite.

(10) Asbestos-Containing Material (ACM): Asbestos or any material containing more than one percent (1%) asbestos.

(11) Asbestos-Containing Waste Material: ACM or asbestos-contaminated objects requiring disposal.

(12) Asbestos Handler: Individual who disturbs, removes, repairs, or encloses friable asbestos material. This individual shall have completed approved training course(s) and be in possession of certification issued by NYCDEP and NYSDOL.

(13) Asbestos Handler Supervisor: Individual who supervises the handlers during an asbestos project and ensures that proper asbestos abatement procedures as well as individual safety procedures are being adhered to. This individual shall have completed approved training course(s) and be in possession of certification issued by NYCDEP and NYSDOL.

(14) Asbestos Handling Certificate: Certificate(s) issued to individuals who have met the criteria established by NYCDEP and/or NYSDOL.

(15) Asbestos Inspection Report: A report on the condition of a building or structure in relation to the presence and condition of asbestos therein.

(16) Asbestos Investigator: An individual certified by NYCDEP as having successfully demonstrated the ability to identify the presence of and evaluate the condition of asbestos in a building or structure.

(17) Asbestos Project: Any form of work performed in connection with the alteration, innovation, modification, or demolition of a building or structure which will disturb (e.g. remove, enclose, encapsulate) more than three (3) linear feet or more than three (3) square feet of friable ACM.

(18) ASTM: The American Society for Testing and Materials International.

(19) Authorized Visitor: Authorized visitor shall mean the Commissioner and the Commissioner's representative, and any representative of a regulatory or other agency having jurisdiction over the project.

(20) Certified Industrial Hygienist (CIH): Individual with a minimum of five (5) years experience as an industrial hygienist and who has successfully completed both levels of the examination administered by the American Board of Industrial Hygiene and who is currently certified by that board.

(21) Certified Safety Professional (CSP): Individual having a bachelor's degree from an accredited college or university and a minimum of four (4) years experience as a safety professional and who has successfully completed both levels of the examination administered by the Board of Certified Safety Professionals and who is currently certified by that board.

(22) City: Shall mean the City of New York.

(23) Clean Room: An uncontaminated area or room that is part of worker decontamination enclosure system with provisions for storage of workers' street clothes and protective equipment.

(24) Clearance Air Monitoring: Employment of aggressive sampling techniques with a volume of air collected to determine the airborne concentration of residual fibers and shall be performed as the final abatement activity.

(25) Commissioner: Shall mean the head of the Agency that has entered into this contract or a duly authorized representative.

(26) Competent Person: Shall mean the designated person as defined in OSHA 29CFR 1926.1101.

(27) Curtained Doorway: Device that consists of at least three (3) overlapping sheets of polyethylene over an existing or temporarily framed doorway. One sheet shall be secured at the top and left side, the second sheet at the top and right side, and the third sheet at the top and left side. All sheets shall have weights attached to the bottom to ensure that the sheets hang straight and maintain a seal over the doorway when not in use.

(28) Decontamination Enclosure System: Series of connected rooms, separated from the work area and from each other by air locks, for the decontamination of workers, materials, waste containers, and equipment.

(29) Encapsulant (Sealant) or Encapsulating Agent: Liquid material which can be applied to ACM and which temporarily controls the possible release of asbestos fibers from the material either by creating a membrane over the surface (bridging encapsulant) or by penetrating into the material and binding its components together (penetrating encapsulant). This may also be used to seal surfaces from which ACM has been removed.

(30) Encapsulation: Coating or spraying of ACM with a sealant.

(31) Enclosure: Construction of airtight walls and/or ceilings between ACM and the facility environment, or around surfaces coated with ACM, or any other appropriate procedure as determined by the NYCDEP which prevents the release of asbestos fibers.

(32) ELAP: Environmental Laboratory Approval Program administered by the New York State Department of Health.

(33) EPA or USEPA: United States Environmental Protection Agency.

(34) Equipment Room: Contaminated area or room that is part of the worker decontamination enclosure system with provisions for the storage of contaminated clothing and equipment.

(35) Fixed Object: Utility or associated piping within the work area that cannot be removed from the work area.

(36) Friable Asbestos Material: Asbestos or any ACM that can be crumbled, pulverized, or reduced to powder when dry, by hand or other mechanical pressure.

(37) Glove-Bag Technique: Method for removing friable ACM from heating, ventilation, and air conditioning (HVAC) ducts, short piping runs, valves, joints, elbows, and other nonplanar surfaces in a noncontained work area. The glove-bag assembly is a manufactured device consisting of a glove-bag (constructed of at least 6-mil transparent polyethylene), two inward-projecting long sleeve gloves, one inward-projecting water wand sleeve, an internal tool pouch, and an attached, labeled receptacle for asbestos waste. The glove-bag is constructed and installed in such a manner that it surrounds the object or area to be decontaminated and contains all asbestos fibers released during the removal process.

(38) HEPA-Filter: High efficiency particulate air filter capable of trapping and retaining 99.97-percent of particles (asbestos fibers) greater than 0.3-micrometers mass median aerodynamic equivalent diameter.

(39) Holding Area: Chamber in the equipment decontamination enclosure located between the washroom and an uncontaminated area.

(40) Homogeneous Work Area: Portion of the work area that contains one type of ACM and/or where one type of abatement is used.

(41) Industrial Hygiene: Science and art devoted to the recognition, evaluation, and control of those environmental factors or stresses, arising in or from the work place, which may cause sickness, impaired health and well being, or significant discomfort and inefficiency among worker or among the citizens of the community.

(42) Industrial Hygienist: Individual having a college or university degree or degrees in Engineering, Chemistry, Physics or Medicine, or related Biological Sciences who, by virtue of special studies and training, has acquired competence in industrial hygiene. Such special studies and training must have been sufficient in all of the above cognate sciences to provide the abilities:

(a) To recognize the environmental factors and to understand their effect on people and their well being; and,

(b) To evaluate, on the basis of experience and with the aid of quantitative measurement techniques, the magnitude of these stresses in terms of ability to impair people's health and well being; and,

(c) To prescribe methods to eliminate, control, or reduce such stresses when necessary to alleviate their efforts.

(43) Large Asbestos Project: Asbestos project involving the disturbances (e.g. removal, enclosure, encapsulation) of 260-linear feet or more of friable ACM or 160-square feet or more of friable ACM.

(44) Major Violation: Any action, on the job performance or lack of performance that may place any individual at risk other than the worker who commits the violation. A major violation is equivalent to two (2) violation points.

(45) Minor Asbestos Project: Project involving the disturbance (e.g. removal, enclosure, encapsulation, repair) of more than three (3) linear feet, but not more than twenty-five (25) linear feet of friable ACM or more than three (3) square feet, but not more than ten (10) square feet of friable ACM.

(46) Minor Violation: Any action, on the job performance or lack of performance that may place the worker at risk. A minor violation is equivalent to one (1) violation point.

(47) Movable Object: Any equipment or utility in the work area that can be removed from the work area.

(48) Negative Air Pressure Equipment: Portable local exhaust system equipped with HEPA filtration. The system shall be capable of creating a negative pressure differential between the outside and inside of the work area.

(49) NESHAPS: National Emission Standards for Hazardous Air Pollutants.

(50) NIOSH: National Institute for Occupational Safety and Health.

(51) NYCDEP: New York City Department of Environmental Protection.

(52) NYSDOL: New York State Department of Labor.

(53) Occupied Area: Area of the work site where abatement is not taking place and where personnel or occupants normally function or where workers are not required to use personal protective equipment.

(54) OSHA: Occupational Safety and Health Administration.

(55) Person: Individual, partnership, company, corporation, association, firm, organization, governmental agency, administration, or the NYCDEP, or any other group of individuals, or any officer or employee thereof.

(56) Personal Air Monitoring: Method used to determine employees' exposure to airborne fibers. The sample is collected outside the respirator in the worker's breathing zone.

(57) Personal Protective Equipment (PPE): Appropriate protective clothing, gloves, eye protection, footwear, and head gear.

(58) Physician: Person licensed or otherwise authorized under Article 131 Section 65.22 of the New York State Education Law.

(59) Plasticize: Cover floors and walls with polyethylene sheeting as herein specified or by using spray plastics as acceptable to the NYCDEP.

(60) Professional Engineer (PE): Individual having, at a minimum, a Bachelor's Degree in Engineering from an accredited college or university with four (4) years acceptable experience as an engineer and who has successfully completed both levels of the Professional Engineers Examination administered by the State of New York Department of Education, Division of Professional Licensing.

(61) Qualitative Fit Test: Individual test subject's responding (either voluntarily or involuntarily) to a chemical challenge outside the respirator face-piece. Three of the most popular methods include: (1) irritant smoke test; (2) odorous vapor test; and (3) taste test.

(62) Quantitative Fit Test: Exposing the respiratory wearer to a test atmosphere containing an easily detectable, nontoxic aerosol, vapor or gas as the test agent. Instrumentation, which samples the test atmosphere and the air inside the face-piece of the respirator, is used to measure quantitatively the leakage into the respirator. There are a number of test atmospheres, test agents, and exercises to perform during the test.

(63) Registered Architect (RA): Individual having, at a minimum, a Bachelor's Degree in Architecture from an accredited college or university with three (3) years acceptable experience as an architect and who has successfully completed both levels of the Architects Registration Examination administered by the State of New York Department of Education, Division of Professional Licensing.

(64) Removal: Stripping of any asbestos-containing materials from surfaces or components of a structure or taking out structural components in accordance with 40 CFR 61 Subparts A and M.

(65) Shower Room: Room between the clean room and the equipment room in the worker decontamination enclosure with hot and cold running water controllable at the tap and arranged for complete showering during decontamination.

(66) Small Asbestos Project: Asbestos project involving the disturbance (e.g. removal, enclosure, encapsulation) of more than 25-linear feet and less than 260-linear feet of friable ACM or more than 10-square feet and less than 160-square feet of friable ACM.

(67) Staging Area: Work area near the waste transfer airlock where containerized asbestos waste has been placed prior to removal from the work area.

(68) Structural Member: Load-supporting member of a facility, such as beams and load-supporting walls, or any nonload-supporting member, such as ceiling and nonload-supporting walls.

(69) Surfactant: Chemical wetting agent added to water to improve penetration.

(70) Visible Emissions: Emissions containing particulate material that are visually detectable without the aid of instruments.

(71) Washroom: Room between the work area and the holding area in the equipment decontamination enclosure system where equipment and waste containers are wet cleaned and/or HEPA-vacuumed prior to disposal.

(72) Wet Cleaning: Removal of asbestos fibers from building surfaces and objects by using cloths, mops, or other cleaning tools which have been dampened with amended water.

(73) Work Area: Designated excavation, spaces, or areas within a trench or structure where asbestos abatement activities take(s) place.

(74) Worker Decontamination Enclosure System: Portion of a decontamination enclosure system designed for controlled passage of workers and authorized visitors, consisting of a clean room, a shower room, and an equipment room separated from each other and from the work area by airlocks and curtained doorways.

(75) Work Site: Area where abatement activity is being performed. May be composed of one or more work areas.

79.11.1.6 STANDARD OPERATING PROCEDURES

(A) Develop and implement a written standard procedure for abatement work to ensure maximum protection and safeguard from asbestos exposure of the workers, visitors, employees, public, and environment.

(B) TELEPHONE PAGING DEVICE:

The Contractor or the Contractor's authorized representative shall, at all times during the normal workday or during periods of overtime work under this contract, carry a digital telephone paging device ("Beeper") and cellular telephones which can be activated by a telephone number in the 212 or 646 or 718 or 917 area code. The Contractor shall supply the Department of Design and Construction with the activation number for the device and the Contractor is liable to respond back to the calls from DDC within the next one (1) hour period after the Contractor receives calls from DDC. The cost for this device and all charges accruing shall be deemed included in all scheduled items of work.

(C) The standard operating procedure shall ensure:

(1) Tight security from unauthorized entry into the workspace.

(2) Restriction of Contractor's personnel to the immediate work area and access/egress routes.

(3) Donning of proper protective clothing and respiratory protection prior to entering the work area.

(4) Safe work practices in the work place, including provisions for inter-room communications, exclusion of eating, drinking, smoking, or in any way breaking the respiratory protection.

(5) Proper exit practices from the work space to the outside through the showering and decontamination facilities.

(6) Removing asbestos in ways that minimize release of fibers.

(7) Packing, labeling, loading, transporting, and disposing of contaminated material in a way that minimize exposure and contamination.

(8) Emergency evacuation procedures, for medical or safety situations, to minimize the potential exposure to airborne asbestos fibers for emergency personnel, and building environment.

(9) Safety from accidents in the workspace, especially from electrical shocks, fall hazards associated with scaffolding, slippery surfaces, and entanglements in loose hoses and equipment.

(10) Provisions for effective supervision, air monitoring and personnel monitoring for exposure during the work.

(11) Engineering systems that minimize exposure to fibers within the workspace.

(D) Provide an Asbestos Handler Supervisor to provide continuous supervision of all work, and to be responsible for the following:

(1) Ensure that individuals are using proper personal protective equipment and are trained.in its use.

(2) Maintain entry log records and ensure that they are recorded in accordance with the provisions of Title 15, Chapter 1 of RCNY.

(3) Surveillance of the work areas at a minimum of twice per work shift or as required by Title 15, Chapter 1 of RCNY, to ensure that the workers personal protective equipment is not torn or ripped and that respiratory protection is worn at all times.

(4) Ensure that sufficient personal protective equipment is stored in the clean room.

(5) Take precautions to prevent heat stress. Precautions include, but are not limited to, selecting lightweight protective clothing, reducing the work rate, and providing adequate fluid breaks.

(E) ENGINEERING CONTROLS:

(1) The 8-hour time weighted average airborne concentration of fibers to which any passerby may be exposed shall not exceed 0.01-fibers per cubic centimeter of air when fibers have a physical dimension longer than 5-micrometers as determined by the method prescribed in these specifications.

(2) All large asbestos projects shall utilize negative pressure ventilation equipment.

(3) The negative pressure ventilation equipment shall operate continuously, 24-hours a day, from the establishment of isolation barriers through successful clearance air monitoring. If such equipment shuts off, adjacent areas shall be monitored for asbestos fibers.

(4) On loss of negative pressure or electric power to the negative pressure ventilating units, abatement shall stop immediately and shall not resume until power is restored and negative pressure ventilation equipment is operating again.

(5) Negative pressure ventilation equipment shall be exhausted to the outside of the tent enclosure away from passer-by and/or sidewalks.

(a) At no time shall the negative pressure ventilation unit exhaust with 40-feet of a receptor or adversely affect the intake ports, louvers, or entrances for the adjacent buildings.

(b) Heavy duty ducting of equivalent, or larger, shape and dimension as that of the negative pressure ventilation exhaust port shall be used to exhaust to the structure.

(c) All ducting shall be sealed and braced or supported to maintain airtight joints.

(6) Where ducting to the outside is not possible, a second negative pressure ventilation unit compatible with the primary unit's capacity shall be connected in series. The area receiving the exhaust shall have sufficient, nonrecycling exhaust capacity to the outside of the structure. Ventilation unit exhaust ducting shall not exceed twenty five (25) feet in length due to volumetric flow rates caused by friction

(7) In the event that there is a failure of the containment system or a breach in the Isolation Barriers, all abatement work will cease and the Contractor will immediately correct the condition. Abatement work will not resume until the work area has been smoke tested by the third party laboratory and approved by the Project Monitor.

(F) LOCKDOWN ENCAPSULATION PROCEDURES:

The following procedures shall be followed to seal in nonvisible residue while conducting lockdown encapsulation on all surfaces from which ACM is removed:

(a) Only encapsulants rated as acceptable or marginally acceptable on the basis of Battelle Columbus Laboratory test procedures and rating requirements developed under the 1978 USEPA Contract shall be used for lockdown encapsulation.

(b) The encapsulant solvent or vehicle shall not contain a volatile hydrocarbon unless reviewed and approved by DEP.

(c) Latex paint with solids content greater than 15-percent shall be considered a lockdown sealant for coating all nonmetallic surfaces.

(d) Encapsulants shall be applied using airless spray equipment. Spraying is to occur at the lowest pressure range possible to minimize fiber release from encapsulant impact at the surface. It shall be applied with a consistent horizontal or vertical motion.

79.11.1.7 NOTIFICATIONS, PERMITS, WARNING SIGNS, LABELS, AND POSTERS

(A) Erect bilingual (English-Spanish) warning signs around the excavation and at every point of potential entry from the street level which can be viewed by the public without obstruction, in accordance with OSHA 29 CFR 1926.1101 (K) (Sign Specifications) and Title 15, Chapter 1 of RCNY. The warning signs shall be a bright color so that they will be easily noticeable. The size of the sign and the size of the lettering shall be no less than OSHA requirements.

(B) Provide the required labels for all polyethylene bags and all drums utilized to transport contaminated material to the landfill in accordance with OSHA 29 CFR 1926.1101 (K)(2) and by 49 CFR Parts 171 and 172 of the Department of Transportation regulations.

(C) Provide any other signs, labels, warnings, and posted instructions that are necessary to protect, inform and warn people of the hazard from asbestos exposure. Post in a prominent and convenient place for the workers a copy of the latest applicable regulations from OSHA, EPA, NIOSH, State of New York and New York City and any additional items mandated for posting by the aforementioned regulations.

(D) Furnish all permits, variances and notices required to perform the work.

79.11.1.8 EMERGENCY PRECAUTIONS

(A) Establish emergency exit(s) from the work area. The clean side of all emergency exits shall be equipped with two full sets of protective clothing and respirators at all times.

(B) Notify local medical emergency personnel, both ambulance crews and hospital emergency room staff prior to commencement of abatement operations as to the possibility of having to handle contaminated or injured workmen, and shall be advised on safe decontamination.

(C) Prepare to administer first aid to injured personnel after decontamination. Seriously injured personnel shall be treated immediately or evacuated immediately for decontamination. When an injury occurs, precautions shall be taken to reduce airborne fiber concentrations (i.e. misting of the air with water) until the injured person has been removed from the work area.

(D) Notify, before actual removal of the asbestos material, the local police and fire departments to the danger of entering the excavated area where removal is taking place. Contractor shall make every effort to help these agencies form plans of action should their personnel need to enter the contaminated area.

79.11.1.9 SUBMITTALS

(A) Construction Submittals:

Five (5) business days prior to excavating within three (3) feet of existing Transit Authority ducts which may contain asbestos-containing materials, the Contractor shall submit three (3) copies of the Contractor's detailed plan of action including the following items, bound and indexed. At this time and prior to this excavation work a meeting will be scheduled by the City of New York Department of Design and Construction. This meeting shall be attended by the Contractor and the Contractor's Subcontractor(s), a designated representative of the City of New York third party air monitoring firm and the Engineer.

(a) Contractor's scope of work, work plan and schedule.

(b) Notifications to Government Agencies.

(c) Copies of permits, clearance and licenses if required.

(d) Schedules: The Contractor shall provide to the Engineer a copy of the following schedules for approval. Once approved, schedules shall be maintained and updated as received. The Contractor shall post a copy of all schedules at the site:

(1) A construction schedule stating critical dates of the project including, but not limited to, mobilization, work area preparation, demolition, gross removal, fine cleaning, encapsulation, inspections, clearance monitoring, and phase of refinishing and final inspections. The schedule shall be updated biweekly, at a minimum.

(2) A schedule of staffing stating number of workers per shift per activity, name and number of supervisor(s) per shift, shifts per day, and total days to be worked.

(3) Submit all changes in schedule or staffing to the Engineer prior to implementation.

(4) A schedule of equipment to be used including numbers and types of all major equipment such as HEPA Air Filtration Units, HEPA-vacuums, airless sprayers, Water Atomizing Devices and Type "C" compressors.

(e) A written plan and shop drawings for preparation of work site and decontamination chamber.

(f) Description of protective clothing and approved respirator to be used, make, model, NIOSH approval numbers.

(g) Delineation of responsibility of work site supervision, including competent person, with names, resumes, and home telephone numbers.

(h) Explanation of decontamination sequence and isolation techniques.

(i) Description of specific equipment to be utilized, including make and model number of air filtration devices, vacuums, sprayers, etc.

(j) Description of any prepared methods, procedures, techniques, or equipment other than those specified in the contract documents.

(k) Explanation of the handling of contaminated wastes including EPA and NYCDEP identification numbers of Waste Hauler.

(l) Description of the final clean-up procedures to be used.

(m) Name and qualifications of Contractor's testing laboratory including AIHA accreditation, and proof of NIOSH PAT and NIST/NVLAP Bulk Quality Assurance Proficiency of OSHA samples for approval by the City of New York Department of Design and Construction.

(n) Written description of emergency procedures to be followed in case of injury or fire. This section must include evacuation procedures, source of medical assistance (name and telephone number) and procedures to be used for access by medical personnel (examples: first aid squad and physician). NOTE: Necessary Emergency Procedures Shall Take Priority Over All Other Requirements Of These Specifications.

(o) Material Safety Data Sheets (MSDS) for encapsulants, sealants, firestopping foam, cleaners/disinfectants, spray adhesive and any and all potentially hazardous materials that may be employed on the project. No work involving the aforementioned will be allowed to proceed until MSDS are reviewed.

(p) Worker Training And Medical Surveillance: Contractor shall submit a list of the persons who will be employed by The Contractor and the Contractor's Subcontractors in the removal work.

Present evidence that workers have received proper training required by the regulations and the medical examinations required by OSHA 29 CFR 1926.1101.

(q) Logs: Specimen copies of daily progress log, visitor's log, and disposal log.

(1) The Contractor shall provide a permanently bound log book of minimum 8-1/2" x 11" size at the entrance to the Worker and Waste Decontamination enclosure system as hereinafter specified. Log book shall contain on title page the project name, name, address and phone number of Environmental Control Representative; name, address and phone number of Abatement Contractor; name, address and phone number of Contractor and City's air testing entity; and, emergency numbers including, but not limited to local Fire/Rescue Department. Log book shall contain a list of personnel approved by the laboratory for entry into the work area.

(2) All entries into the log shall be made in nonwashable, permanent ink and such pen shall be strung to or otherwise attached to the log to prevent removal from the log-in area. Under no circumstances shall pencil entries be permitted. Any significant events occurring during the abatement project shall be entered into the log. Upon completion of the job, the Contractor shall submit the logbook containing a day-to-day record of personnel log entries countersigned by the Project Monitor everyday.

(r) Worker's Acknowledgments: Submit statements signed by each employee that the employee has received training in the proper handling of ACM understands the health implications and risks involved; and understands the use and limitations of the respiratory equipment to be used.

(B) Copies of the following items shall be submitted to the Project Monitor during the work:

(1) Security and safety logs showing names of person entering workspace, date and time of entry and exit, record of any accident, emergency evacuation, and any other safety and/or health incident.

(2) Progress logs showing the number of workers, supervisors, hours of work and tasks completed daily to the Engineer.

(3) Contractor's current work progress for review by the Engineer at weekly progress meetings.

(4) All Contractors' air monitoring and inspection results.

(C) Project Closeout Submittals:

Upon completion of the project and as a condition of acceptance, the Contractor shall present two (2) copies of the following items, bound and indexed:

(1) Lien Waivers from Contractor, Subcontractors and Suppliers,

(2) Daily OSHA air monitoring results,

(3) All Waste Manifests (Asbestos and Construction Debris), seals and disposal logs,

(4) Field Sign-In/Sign-Out Logs for every shift,

(5) A Letter of Compliance stating that all the work on this project was performed in accordance with the specifications and all applicable Federal, State and Local regulations,

(6) All Warranties as stated in the specifications,

(7) Fully executed disposal certificates and transportation manifest.

79.11.1.10 QUALITY ASSURANCE

(A) All work required for the completion of this project or called for in this specification must be executed in a workmanlike manner by using the appropriate methods established by regulatory requirements and/or industrial standards. All workmanship or work methods are subject to review and acceptance by the Engineer. Throughout the specification, reference is made to codes and standards which establish qualities, levels or types of workmanship which will be considered acceptable. It is the Abatement Contractor's responsibility to comply with these codes and standards during the execution of this work.

(B) All materials and equipment required or consumed during the work of this contract must meet the minimum acceptable criteria established by codes and standards referenced elsewhere in this specification. Materials and equipment must be submitted for prior approval as part of the Contractor's "Shop Drawings".

(C) It is the Abatement Contractor's responsibility, when so required by the specification or upon written request from the Commissioner or the Commissioner's representative to furnish all required proof that workmanship, materials and/or equipment meet or exceed the codes and standards referenced. Such proof shall be in the form requested, typically a certified report or test conducted by a testing entity approved for that purpose by DDC.

(D) The Contractor shall furnish proof that employees working under the Contractor's supervision have had instruction on the dangers of asbestos exposure, on respirator use, decontamination, and OSHA regulations. This proof shall be in the form of a notarized affidavit to the effect that the above requirements have been satisfied. In addition, the Contractor shall have posted in the clean room of the decontamination enclosure unit all state and city certification of all workers involved in the handling and removal of asbestos.

(E) The Contractor will have at all times in the Contractor's possession and in view at the job site the OSHA regulations 29 CFR 1910.1001, and 1926.1101 Asbestos, and Environmental Protection Agency 40 CFR, Part 61, subpart B: National Emission Standard for asbestos, asbestos stripping, work practices and disposal of asbestos waste. The Contractor shall also have one copy of NYC Title 15, Chapter 1 of RCNY and NYS DOL ICR 56 at the job site at all times.

(F) Familiarity With Pertinent Codes And Standards: In procuring all items used in this work, it is the Contractor's responsibility to verify the detailed requirements of the specifically named codes and standards and to verify that the items procured for use in this work meet or exceed the specified requirements, and are suitable for their intended use.

(G) Rejection Of Noncomplying Items: The Commissioner reserves the right to reject items incorporated into the work that fail to meet the specified minimum requirements. The Commissioner further reserves the right, and without prejudice to other recourse that maybe taken, to accept noncomplying items subject to test and approval by the City.

(H) Applicable Regulations, Codes And Standards: Applicable standards listed in these specifications include, but are not necessarily limited to, standards promulgated by the following agencies and organizations:

(1) United States Environmental Protection Agency (EPA or USEPA)
Region II
Asbestos NESHAPS Contact
Air And Waste Management Division
(Air Compliance Branch) - USEPA
290 Broadway, 21st Floor
New York, New York 10007-1866
212-637-3660

(2) Occupational Safety and Health Administration (OSHA)
Region II - Regional Office
201 Varick Street, Room 908
New York, New York 10014
212-337-2378

(3) National Electrical Code (NEC)
See NFPA

(4) National Fire Protection Association (NFPA)
1 Batterymarch Park
Quincy, Massachusetts 02169-7471
617-770-3000

(5) National Institute for Occupational Safety and Health (NIOSH)
Robert A. Taft Laboratory
4676 Columbia Parkway
Mailstop R12 Cincinnati, Ohio 45226
513-841-4428

(6) Department of Health and Mental Hygiene (DOHMH)
Environmental Investigation
125 Worth Street
New York, New York 10013
212-442-3372

(7) American National Standards Institute (ANSI)
(Successor to USASI and ASA)
25 West 43rd Street (between 5th and 6th Avenue), 4th Floor
New York, New York 10036
212-642-4900

(8) American Society for Testing and Materials (ASTM)
100 Bar Harbor Drive
West Conshohocken, Pennsylvania 19428-2959
610-832-9500

(9) New York City Department of Environmental Protection (NYCDEP)
Bureau of Environmental Compliance
Asbestos Control Program
59-17 Junction Boulevard, 8th Floor
Corona, New York 11368
718-595-3682

(10) New York City Department of Sanitation
125 Worth Street, Room 714
New York, New York 10013
212-566-1066

(11) New York State Department of Labor (NYSDOL)
Division Of Safety And Health
Engineering Services Unit
State Office Building Campus
Albany, New York 12240-0010

(I) Post all applicable regulations in a conspicuous place at the job site. Assure that the regulations are not altered, defaced or covered by other materials. One copy of each regulation must also be kept at the Contractor's office.

79.11.1.11 CITY/CONTRACTOR RESPONSIBILITIES

(A) The City will not enter the portions of the excavation, in which work is being performed during the entire asbestos removal operation, including completion of clean up.

(B) The Contractor shall provide a plan for 24-hours job security both for prevention of theft and for barring entry of curious but unprotected personnel into work areas.

(C) The Contractor shall provide own means of power if needed and the City will not be held responsible for the downtime due to faulty Contractor's equipment.

(D) The Contractor shall provide all electrical, water, and waste connections, tie-ins, extensions, and construction materials, supplies, etc. At the end of each shift, the Contractor shall disconnect all hoses within the work zone and place in equipment room of the worker decontamination unit. The Contractor shall ensure positive shutoff of all water to work area during nonworking hours.

(E) All temporary facilities required to be installed, shall be subject to the approval of the Commissioner. Prior to starting the work at any site; specify clearly the temporary locations of facilities preferably with sketches and submit the same to the Engineer for approval.

(F) The Contractor shall provide water needed to conduct the required asbestos abatement. All temporary plumbing or adaptations to supply the needs of the work area shall be installed and removed by the Contractor. Shower water for the decontamination unit shall be provided hot. Heating of water, if necessary, shall be provided by the Contractor.

(G) Any additional electrical equipment (i.e. transformers, etc.), which is necessary shall be provided by the Contractor.

(H) The Contractor shall provide fire protection in accordance with all State and Local fire codes.

(I) Any parts of the service lines, within the excavated work area, disturbed or damaged by the installation and/or removal of the temporary service lines, shall be restored to their original condition by the Contractor to the satisfaction of the respective utility company.

(J) Contractor shall supply hot shower water necessary for use in the decontamination unit.

79.11.1.12 USE OF THE AREA

(A) The Contractor shall confine Contractor's apparatus, the storage of materials, and supplies, and the operation of the Contractor's workmen to limits established by law, ordinances, and the directions of the Engineer. All flammable or combustible materials shall be properly stored to obviate fire and in areas approved by the Engineer.

(B) The Contractor shall assure of a clear path out of the excavated area, that appropriate safety barriers are established to prevent access, and that work areas are kept neat, clean, and safe.

(C) All surrounding work, fixtures, soil lines, drains, water lines, gas pipes, electrical conduit, wires, utilities, etc. which are to remain in place shall be carefully protected and, if disturbed or damaged, shall be repaired or replaced as directed by the City in accordance with the terms of this contract.

(D) Attention is specifically drawn to the fact that other contractors, performing the work of other contracts, may be (or are) brought upon any of the work sites of this contract. Therefore, the Contractor shall not have exclusive rights to any site of work and shall fully cooperate and coordinate Contractor's work with the work of other contractors who may be on (or are on) any site of the work of this contract. Regulated area exempted.

(E)Temporary toilet facilities must be provided by the Contractor on the site. Coordinate location of such facilities with the Engineer.

79.11.1.13 PROTECTION AND DAMAGE

(A) The Contractor is responsible to cover and protect all equipment that cannot be removed from work areas.

(B) No materials or debris shall be thrown within the excavated area.

(C) Debris shall be removed from the work site daily. Work area shall be left neat and clean after each work shift, so that work may proceed the next regular workday without interruption. Limited bag storage may take place within the work area when approved by the Engineer.

79.11.1.14 RESPIRATORY PROTECTION REQUIREMENTS

(A) Respiratory protection shall be worn by all individuals who may be exposed to asbestos fibers from the initiation of the asbestos project until all areas have successfully passed clearance air monitoring in accordance with regulations and these specifications.

(B) The Contractor shall develop and implement a written respiratory protection program with required site-specific procedures and elements. The program shall be administered by a properly trained individual. The written respiratory protection program shall include the requirements set forth in OSHA Standard 29 CFR 1910.134, at a minimum.

(C) The Contractor shall provide workers with individually issued and marked respiratory equipment. Respiratory equipment shall be suitable for the asbestos exposure level(s) in the work area(s), as specified in OSHA Standards 26 CFR 1910.134 and 29 CFR 1926.1101, NIOSH Standard 42 CFR 84, or as more stringently specified otherwise, herein.

(D) Where respirators with disposable filter parts are employed, the Contractor will provide sufficient filter parts for replacement as necessary or as required by the applicable regulation.

(E) All respiratory protection shall be NIOSH approved. All respiratory protection shall be provided by the Contractor, and used by workers in conjunction with the written respiratory protection program.

(F) Contractor shall provide respirators selected by an Industrial Hygienist that meet the following requirements:

AIRBORNE CONCENTRATION OF ASBESTOS OR CONDITIONS OF USE	REQUIRED RESPIRATOR
Not in excess of 1-fibers per cubic centimeter (f/cc), ten (10) times Permissible Exposure Level (PEL)	Half-mask air purifying respirator, other than a disposable respirator, equipped with high efficiency filters.
Not in excess of 5-f/cc, 50 times PEL	Full face-piece air-purifying respirator equipped with high efficiency filters.
Not in excess of 100-f/cc, 1,000 times PEL	Powered air purifying respirator equipped with equipped with high efficiency filters or any supplied air respirator operated in continuous flow mode.
Not in excess of 100-f/cc, 1,000 times PEL	Full face-piece supplied air respirator operate in pressure demand mode.
Greater than 1,000-f/cc, 10,000 times PEL, or unknown concentration	Full face-piece supplied air respirator operate in pressure demand mode, equipped with an auxiliary positive pressure self-contained breathing apparatus.

(G) Selection of high efficiency filters:

(1) All high efficiency filters shall have a nominal efficiency rating of 100 (99.97-percent effective) when tested against 0.3-micrometer monodisperse diethyl-hexyl phthalate (DOP) particles.

(2) Choose N-, R-, or P- series filters based upon the presence or absence of oil particles.

(a) N- series filters shall only be used for non-oil solid and water based aerosols or fumes.

(b) R- and P -series filters shall be used when oil aerosols or fumes (i.e., lubricants, cutting fluids, glycerin, etc.) are present. The R- series filters are oil resistant and the P- series filters are oil proof.

(c) Follow filter manufacture recommendations.

(3) If a vapor hazard exists, use an organic vapor cartridge in combination with the high efficiency filter.

(H) Historical airborne fiber level data may serve as the basis for selection of the level of respiratory protection to be used for an abatement task. Historical data provided by the Contractor shall be based on personal air monitoring performed during work operations closely resembling the processes, type of material, control methods, work practices, and environmental conditions present at the site. Documentation of aforementioned results may be requested by the City and/or Testing Laboratory for review. This will not relieve the Contractor from providing personal air monitoring to determine the time-weighted average (TWA) for the work under contract. The TWA shall be determined in accordance with 29 CFR 1926.1101.

(I) At no time during actual removal operations shall half-mask air purifying respirators be allowed unless a full 8-hour TWA and excursion limit have been conducted, and reviewed by the Project Monitor. Use of single use dust respirators is prohibited for the above respiratory protection.

(J) Workers shall be provided with personally issued and individually marked respirators. Respirators shall not be marked with any equipment that will alter the fit of the respirator in any way. Only waterproof identification markers shall be used.

(K) The Contractor shall ensure that the workers are qualitatively or quantitatively fit tested by an Industrial Hygienist initially and every 12-months thereafter with the type of respirator the Contractor will be using.

(L) Whenever the respirator design permits, workers shall perform the positive and negative air pressure fit test each time a respirator is worn. Powered air-purifying respirators shall be tested for adequate flow as specified by the manufacturer.

(M) No facial hairs (beards) shall be permitted to be worn when wearing respiratory protection that requires a mask-to-face seal.

(N) If a worker wears glasses, a spectacle kit to fit their respirator shall be provided by the Contractor at the Contractor's expense.

(O) Respiratory protection maintenance and decontamination procedures shall meet the following requirements:

(1) Respirators shall be inspected and decontaminated on a daily basis in accordance with OSHA 29 CFR 1910.134 (b); and,

(2) High efficiency filters for negative pressure respirators shall be changed after each shower; and,

(3) Respiratory protection shall be the last piece of worker protection equipment to be removed. Workers must wear respirators in the shower when going through decontamination procedures as stated in **Subsection 79.11.3.3**; and,

(4) Airline respirators with high efficiency filtered disconnect shall be disconnected in the equipment room and worn into the shower. Powered air-purifying respirator face pieces shall be worn into

the shower. Filtered/power pack assemblies shall be decontaminated in accordance with manufacturers recommendations; and,

(5) Respirators shall be stored in a dry place and in such a manner that the face-piece and exhalation valves are not distorted; and,

(6) Organic solvents shall not be used for washing of respirators.

(P) Authorized visitors shall be provided with suitable respirators and instruction on the proper use of respirators whenever entering the work area. Qualitative fit test shall be done to ensure proper fit of respirator.

79.11.1.15 PROTECTIVE CLOTHING

(A) Provide worker protection as required by the most stringent OSHA and/or EPA standards applicable to the work. Provide to all workers, foremen, superintendents, authorized visitors and inspectors, protective disposable clothing consisting of full-body coveralls, head covers, gloves and 18-inch high boot type covers or reusable footwear.

(B) In addition to personal protective equipment for workers, the Contractor shall make available at each worksite at least four (4) additional uniforms and required respiratory equipment each day for personnel who are authorized to inspect the work site. The Contractor shall also provide, for the duration of the work at any site involving a decontamination unit for worksite access, a lockable storage locker for use by the Engineer. In addition to respiratory masks for workers, the Contractor must have on hand at the beginning of each work day, at least four (4) masks each with two (2) sets of fresh filters, for use by personnel who are authorized to inspect the worksite. The Contractor shall check for proper fit of the respirators of all City personnel authorized to enter the work area.

(C) Asbestos handlers involved in tent procedures shall wear two (2) disposable suits, including gloves, hood and footwear, and appropriate respiratory equipment. All street clothes shall be removed and stored in a clean room within the work site. The double layer personal protective equipment shall be used for installation of the tent and throughout the procedure, if a decontamination unit (with shower and clean room) is contiguous to the work area, only one (1) layer of disposable personal protective equipment shall be required; in this case, prior to exiting the tent the worker shall HEPA vacuum and wet clean the disposable suit.

The outer disposable suit (if two (2) suits are worn) shall be removed and remain in the tent upon exiting. Following the tent disposal and work site clean up the workers shall immediately proceed to a shower at the work site. The inner disposal unit and respirator shall be removed in the shower after appropriate wetting. The disposal clothing shall be disposed of as asbestos-containing waste material. The workers shall then fully and vigorously shower with supplied liquid bath soap, shampoo, and clean dry towels.

(D) Coveralls: Provide disposable full-body coveralls and disposable head covers. Require that they be worn by all workers in the work area. Provide a sufficient number for all required changes for all workers in the work area.

(E) Boots: Provide work boots with non-skid soles, and where required by OSHA, foot protection, for all workers. Provide boots at no cost to workers. Paint uppers of all boots yellow with waterproof enamel. Do not allow boots to be removed from the work area for any reason after being contaminated with ACM and/or dust.

(F) Hard Hats: Provide hard hats as required by OSHA for all workers, and provide a minimum of four (4) spares for Inspectors, visitors, etc. Label all hats with same warning label as used on disposal bags. Require hard hats to be worn at all times that work is in progress that may cause potential head injury. Provide hard hats of the type with polyethylene strap suspension. Require hats to remain in the work area throughout the work. Thoroughly clean and decontaminate and bag hard hats prior to removing them from the work area at the end of the work.

(G) Goggles: Provide eye protection (goggles) as required by OSHA for all workers involved in any activity that may potentially cause eye injury. Require them to be worn at all times during these activities. Thoroughly clean and decontaminate goggles before removing them from the work area.

(H) Gloves: Provide work gloves to all workers, of the type dictated by the work and OSHA Standards. Do not remove gloves from the work area. Dispose of as asbestos-contaminated waste at the end of the work. Gloves shall be worn at all times, except during work area preparation activities that do not disturb ACM.

(I) Reusable footwear, hard hats and eye protection devices shall be left in the contaminated Equipment Room until the end of the asbestos abatement work.

(J) Disposable protective clothing shall be discarded and disposed of as asbestos waste every time the wearer exits from the workspace to the outside through the decontamination facility.

(K) Respirators, disposable coveralls, head covers and foot covers shall be provided by the Contractor for the Project Monitor, Engineer and any other authorized representative who may inspect the work area. Provide two (2) respirators and six (6) respirator filter changes per day.

79.11.1.16 AIR MONITORING - CONTRACTOR

(A) The Contractor shall employ a qualified Industrial Hygiene Laboratory to analyze air samples in accordance with OSHA Regulations, 1926.1101 (Asbestos Standards for Construction) and New York City regulations.

(B) The Industrial Hygiene Laboratory shall be a current proficient participant in the American Industrial Hygiene Association (AIHA) PAT Program. The laboratory identification number shall be submitted and approved by the City. The laboratory shall be accredited by the AIHA and New York State Department of Health Environmental Laboratory Approval Program (ELAP).

(C) The Industrial Hygiene Laboratory shall also be a current proficient participant in the NIST/NVLAP Quality Assurance Program for the identification of bulk samples. Laboratory identification number shall be submitted to and approved by the City.

(D) The Contractor shall require a competent person (as defined in OSHA 1926.1101) to perform the following functions and to be on-site continuously for the duration of the project:

(1) Monitor the set up of the work area enclosure and ensure its integrity.

(2) Control entry and exit into the work enclosure.

(3) Ensure that employees are adequately trained in the use of engineering controls, proper work practices, proper personal protective equipment and in decontamination procedures.

(4) Insure that employees use proper engineering controls, proper work practices, proper personal protective equipment and proper decontamination procedures.

(5) The competent person (as defined in OSHA1926.1101) shall check for rips and tears in work suits, and ensure that they are mended immediately or replaced.

(E) Air monitoring responsibilities, shall be performed by a representative of the testing laboratory retained by the Contractor.

(F) Contractor shall submit to the City all credentials of the designated (as defined in OSHA 1926.1101) and Industrial Hygiene Laboratory representative for approval.

(G) Air monitoring and inspection shall be conducted by the Contractor's competent person (as defined in OSHA 1926.1101).

(H) Continuous (daily or per shift) monitoring and inspection will include work area samples, personnel samples from the breathing zone of a worker to accurately determine the employees' 8-hour TWA (unless Type C respirators are used) and decontamination unit clean room samples.

(I) Work area samples and employee personnel samples shall be taken using pumps whose flow rates can be determined to an accuracy of ±5-percent, at a minimum of two (2) liters per minute. This must be demonstrated at the job site.

(J) Sampling and analysis methods shall be per NIOSH 7400A.

(K) Test Reports:

(1) Promptly process and distribute one (1) copy of the test results, to the Commissioner.

(2) Prompt reports are necessary so that if required, modifications to work methods and/or practices may be implemented as soon as possible.

(3) Contractor shall by facsimile notify the Commissioner within 24-hours of the results of each test, followed by written notification within three (3) days.

(L) The Contractor's competent person shall conduct inspections and provide written reports daily. Inspections will include checking the standard operating procedures, engineering control systems, respiratory protection and decontamination systems, packaging and disposal of asbestos waste, and any other aspects of the project which may affect the health and safety of the people and environment.

(M) The City reserves the right to conduct air and surface dust sampling in conjunction with and separate from the Testing Laboratory for the purposes of Quality Assurance.

(N) All samples shall be accompanied by a Chain of Custody Record that shall be submitted to the Project Monitor upon completion of analysis.

79.11.1.17 TESTING LABORATORY

(A) The City, at its own expense, will employ the services of an Independent Testing Laboratory. The Testing Laboratory will perform air sampling activities at the site and perform periodic observations of the work site.

(B) The Laboratory will perform analysis of air samples utilizing phase contrast microscopy (PCM) and/or transmission electron microscopy (TEM). This laboratory shall meet the standards stated herein.

(C) Observations will include, but not be limited to, checking the standard operating procedures, engineering control systems, respiratory protection, decontamination systems, packaging and disposal of asbestos waste, and any other aspects of the project that may affect the health and safety of the environment, Contractor, and/or facility occupants.

(D) The Testing Laboratory shall have access to all areas of the asbestos removal project at all times and shall continuously inspect and monitor the performance of the Contractor to verify that said performance complies with this specification. The Testing Laboratory shall be on site throughout the entire abatement operation.

(E) The City will be responsible for costs incurred with the required laboratory work. Any subsequent additional testing required due to limits exceeded during initial testing shall be paid for by the Contractor.

(F) At a minimum, air sampling shall be conducted in accordance with the following schedule:

ABATEMENT ACTIVITY	PRE-ABATEMENT	DURING ABATEMENT	POST- ABATEMENT
Equal to or greater than 10,000-square feet or 10,000-linear feet of ACM	PCM	PCM	TEM
Less than 10,000-square feet or 10,000-linear feet of ACM	PCM	PCM	PCM
Exceptions to the above:			
Boiler Rooms	PCM	PCM	PCM
Tent and Glovebag Procedures	PCM	PCM	PCM
Demolitions	PCM	PCM	PCM

Note: TEM is acceptable wherever PCM is required.

(G) Prior to commencement of abatement activities, the Testing Laboratory will collect a minimum number of area samples inside each homogeneous work area.

(1) Samples will be taken during normal activities and circumstances at the work site.

(2) Samplers shall be located within the proposed work area and at all proposed isolation barrier locations.

(3) Samples shall be analyzed using PCM.

(4) The number of samples to be collected will be determined by the size of the project.

(H) Area air sampling during abatement shall be conducted as specified in the following documents except as restricted or modified herein:

(1) Measuring Airborne Asbestos Following An Abatement Action, US EPA document 600/4-85-049 (Nov., 1985);

(2) Guidance For Controlling Asbestos-Containing Materials In Buildings; US EPA Publication 560/5-85-024 (June, 1984);

(3) Methodology For The Measurement Of Airborne Asbestos By Electron Microscopy, US EPA Contract No. 68-02-3266;

(4) Mandatory And Nonmandatory Electron Microscopy Methods, set forth in 40 CFR Part 763, Subpart E, Appendix A;

(5) NIOSH 7400 method using "A" counting rules.

(I) In accordance with the above criteria, area samples (see NYCDEP Asbestos Control Program Regulations) shall conform to the following schedule:

AREA SAMPLES FOR ANALYSIS BY	MINIMUM VOLUME	FLOW RATE
PCM, 25-mm cassettes	560-liters	5 to 15-liters/minute
TEM, 25-mm cassettes	560-liters	1 to 10-liters/minute
TEM, 37-mm cassettes	1,250-liters	1 to 10-liters/minute

(1) All costs resulting from additional air tests and observations shall be borne by the Contractor. These costs may include, but are not limited to, labor, analysis fees, materials, and expenses.

(2) After the area has been found to be in compliance, the Contractor may remove Isolation Barriers, tents if any and perform final cleaning as specified.

(J) Clearance And Excavation Re-entry Criteria:

(1) The clearance criteria shall be applied to each excavated work area independently.

(2) For PCM analysis, the clearance air monitoring shall be considered satisfactory when all of the samples regardless of the size of the project are less than or equal to 0.01-f/cc or the background concentrations, whichever is greater.

(3) For TEM analysis, the clearance air monitoring shall be considered satisfactory when the requirements stated in 40 CFR Part 763, Subpart E, Appendix A, Section IV are met.

(4) As soon as the air monitoring tests are completed, the Testing Laboratory will send the results of such tests to the City and notify the Contractor.

(5) The Contractor shall cooperate fully with all aspects of air monitoring operations.

79.11.1.18 TAMPERING WITH TEST EQUIPMENT

All parties to this contract are hereby notified that any tampering with testing equipment will be considered an attempt at falsifying reports and records to federal and state agencies and each offense will be prosecuted under applicable state and federal criminal codes to the fullest extent possible.

79.11.2 PRODUCTS

79.11.2.1 MATERIALS

(A) Wetting Agents: Surfactant shall consist of resin materials in a water base, that have been tested to ensure materials are nontoxic and nonhazardous. Surfactants shall be installed according to the manufacturer's written instructions.

(B) Encapsulants (Sealants, Lockdown Encapsulants): Encapsulants shall consist of pigmented (nontransparent) liquid material which can be applied to asbestos containing materials or bare surfaces exposed after an abatement which temporarily controls the possible release of asbestos fibers from the material or surface either by creating a membrane over the surface (bridging encapsulant) or by penetrating into the material and binding its components together (penetrating encapsulant). The encapsulant shall be installed according to the manufacturer's written instructions. Sealing materials to be applied to structural members and decking assemblies scheduled to receive spray-applied fireproofing shall be approved by UL for use with the specified material.

(C) Fire Retardant Polyethylene Sheeting: Minimum uniform thickness of 6-mil. Provide largest size possible to minimize seams.

(D) Fire Retardant Reinforced Polyethylene Sheeting: For covering floor of decontamination units, provide translucent, nylon reinforced or woven polyethylene laminated, fire retardant polyethylene sheeting. Provide largest size possible to minimize seams, minimum uniform thickness 6-mil.

(E) Drums: Asbestos-transporting drums, sealable and clearly marked with warning labels as required by OSHA and EPA.

(F) Polyethylene Disposal Bags: Asbestos disposal bags, minimum of 6-mil thick. Bags shall be clearly marked with warning labels as required by OSHA and EPA.

(G) Signs: Asbestos warning signs for posting at perimeter of work area, as required by OSHA and EPA.

(H) Waste Container Bag Liners And Flexible Trailer Trays: One piece leak-resistant flexible tray with absorbent pad.

(I) Tape: Provide tape which is of high quality with an adhesive that is formulated to aggressively stick to sheet polyethylene.

(J) Spray Adhesive: Provide spray adhesive in aerosol cans which is specifically formulated to stick tenaciously to sheet polyethylene.

(K) Flexible Duct: Spiral reinforced flex duct for air filtration devices.

(L) Protective Clothing: Workers shall be provided with sufficient sets of properly fitting, full-body, disposable coveralls, head covers, gloves, and 18-inch high boot-type foot covers. Protective clothing shall conform to OSHA Standard 29 CFR 1926.1101.

79.11.2.2 TOOLS AND EQUIPMENT

(A) Air Filtration Device (AFD): AFDs shall be equipped with High Efficiency Particulate Air (HEPA) filtration systems and shall be approved by and listed with Underwriter's Laboratory.

(B) Transportation Equipment: Transportation Equipment, as required, shall be suitable for loading, temporary storage, transit and unloading of contaminated waste without exposure to persons or property. Any temporary storage containers positioned outside the excavated work area for temporary storage shall be metal, closed and locked.

(C) Vacuum Equipment: All vacuum equipment utilized in the work area shall utilize HEPA filtration systems.

(D) Vacuum Attachments: Soft Brush Attachment, Asbestos Scraper Tool, Drill Dust Control Kit.

(E) Electric Sprayer: An electric airless sprayer suitable for application of encapsulating material and shall be approved by and listed with Underwriters Laboratory.

(F) Water Sprayer: The water sprayer shall be an airless or other low-pressure sprayer for amended water application.

(G) Water Atomizer: Powered air-misting device equipped with a ground fault interrupter and equipped to operate continuously.

(H) Brushes: All brushes shall have nylon bristles. Wire brushes are excluded from use due to their potential to shred asbestos fibers into small, fine fibers. Wire brushes may be used for cleaning duct joints within glove-bags upon written approval of the Engineer.

(I) Hand Power Tools: Shall be equipped with HEPA-filtered local exhaust ventilation if used to drill, cut into or otherwise disturb ACM.

(J) Other Tools And Equipment: The Contractor shall provide other suitable tools for the stripping, removal, encapsulation, and disposal activities including but not limited to: hand-held scrapers, sponges, rounded-edge shovels, brooms, and carts.

(K) Fans And Leaf Blower: Provide Leaf Blower (one leaf blower per floor) and one 20-inch diameter fans for each 10,000-cubic feet of work area volume to be used for aggressive sampling technique for clearance air testing.

(L) Fire Extinguishers: Provide type "A" fire extinguishers in spaces where there is minimal danger of electrical or grease-oil-flammable liquid fires. In other areas, provide type "ABC" dry chemical extinguishers of NFPA recommended types for the exposure in each case. All fire extinguishers shall comply with the applicable recommendations of NFPA Standard 10, "Standard For Portable Extinguishers." Provide a minimum of four (4) fire extinguishers in each work area; one in the equipment room of the decontamination unit, one outside the work area in the clean room or directly

outside same, and two fire extinguishers where they are most effective for their intended purpose. Do not exceed seventy-five (75) feet between fire extinguishers within the work area.

(M) First Aid Kits: The Contractor shall maintain adequately stocked first aid kits in the clean rooms of the decontamination units and within work areas. The first aid kit shall be approved by a licensed physician for the work to be performed under this contract.

(N) Water Service:

Water Heater: Provide UL rated 40-gallon electric water heaters to supply hot water for Personal Decontamination Enclosure System Shower. Wiring of the water heater shall comply with NEMA, NECA, and UL standards.

(O) Telephone Paging Device:

The Contractor or the Contractor's authorized representative shall, at all times during the normal workday or during periods of overtime work under this contract, carry a digital telephone paging device ("Beeper") and cellular telephones which can be activated by a telephone number in the 212 or 646 or 718 or 917 area code. The Contractor shall supply the Department of Design and Construction with the activation number for the device and the Contractor is liable to respond back to the calls from DDC within the next one (1) hour period after the Contractor receives calls from DDC. The cost for this device and all charges accruing shall be deemed included in all scheduled items of work.

79.11.2.3 CLEANING

(A) Throughout the construction period, the Contractor shall maintain the work area as described in this section.

(1) The Contractor shall prevent excavated areas other than the work area from becoming contaminated with asbestos-containing dust or debris. Should areas outside the work area become contaminated with asbestos-containing dust or debris as a consequence of the Contractor's work practices, the Contractor shall be responsible for cleaning these areas in accordance with the procedures appended in Title 15, Chapter 1 of RCNY and NYSDOL ICR56.

(2) The Contractor shall provide to all personnel and laborers the required equipment and materials needed to maintain the specified standard of cleanliness.

(B) General:

(1) Waste water from asbestos removal operations, including shower water, may be discharged into the public sewer system only after filtration by an approved device capable of at least 5-micron particle size collection to remove asbestos fibers.

(2) Asbestos wastes shall be double bagged in six (6) mil (0.006") polyethylene bags approved for ACM disposal and shall be properly labeled and handled before disposal.

(3) The Contractor shall use corrugated cartons or drums for disposal of asbestos-containing waste having sharp edged components (e.g. nails, screws, metal lathe and tin sheeting) that may tear polyethylene bags and sheeting. The waste within the drums or cartons must be double bagged.

(4) The Contractor shall transport all bags of waste to disposal site in thirty (30) gallon capacity metal or fiber drums with tight lids, or in locked steel dumpster.

(5) Dumping of debris, waste or bagged waste will not be permitted.

(6) Cleanup of visible accumulations of loose ACM shall occur whenever there is a sufficient amount to fill a single asbestos bag.

(7) ACM shall be collected utilizing rubber dust pans and rubber squeegees.

(8) HEPA vacuums shall not be used on wet materials unless specifically designed for that purpose.

(9) Metal shovels shall not be used within the work area.

(10) Accumulations of dust shall be cleaned off all surfaces of the work area daily.

(11) Mastic solvent when used will be applied in moderation (e.g. by airless sprayer).

(12) The Contractor shall retain all items in the storage area in an orderly arrangement allowing maximum access, not impeding traffic, and providing the required protection of all materials.

(13) The Contractor shall not allow accumulation of scrap, debris, waste material, and other items not required for use in this work. Asbestos contaminated waste must not be kept on the work site overnight.

(14) At least twice a week (more if necessary), the Contractor shall completely remove all scrap, debris and waste material from the job site.

(15) The Contractor shall provide adequate storage space for all items awaiting removal from the job site, observing all requirements for fire protection and concerns for the environment.

(16) All respiratory protection equipment shall be selected from the latest NIOSH Certified Equipment list.

(17) Daily and more often, if necessary, the Contractor shall inspect the work areas and adjoining spaces, and pick up all scrap, debris, and waste material. All such items shall be removed to the place designated for their storage.

(18) Weekly, and more often, if necessary, the Contractor shall inspect all arrangements of materials stored on the site; re-stack and tidy them or otherwise service them to meet the requirements of these specifications.

(19) The Contractor shall maintain the site in a neat and orderly condition at all times.

79.11.3 EXECUTION

79.11.3.1 WORKER DECONTAMINATION FACILITY

(A) Large Asbestos Projects (Small Project Option):

Provide a worker decontamination facility in accordance with, Title 15, Chapter 1, OSHA Standard 29 CFR 1926.1101, 12NYCRR Part 56 and as specified herein. Worker decontamination shall be in accordance of the NYCDEP approved procedure for removing asbestos containing duct Insulation.

(a) Structure:

(1) Use modular systems or build using wood or metal frame studs, joists, and rafters placed at a maximum of 16-inches on-center.

(2) When worker decontamination unit is located outdoors, in areas with public access, or in correctional facilities, frame work shall be lined with minimum 3/8" thickness plywood sheathing. Sheathing shall be caulked or taped airtight at all joints and seams.

(3) Interior shall be covered with two (2) layers of opaque 6-mil polyethylene sheeting, with a minimum overlap of 12-inches at seams. Seal seams airtight using tape and adhesive.

The interior floor shall be covered with two (2) layers of reinforced fire-retardant polyethylene sheeting with a minimum overlap on the walls of twelve (12) inches.

(4) Entrances to the decontamination unit shall be secured with lockable hinged doors. Doors shall be open at all times when abatement operations are in progress. Doors shall be louvered to allow for air movement through the decontamination units into work area.

(b) Curtained Doorways: A device to allow ingress or egress from one room to another while permitting minimal air movement between the rooms.

(c) Air Locks: Air locks shall consist of two curtained doorways placed a minimum of three (3) feet apart.

(d) Decontamination Enclosure System shall be placed adjacent to the work area and shall consist of three (3) totally enclosed chambers, separated from work area and each other by airlocks, as follows:

(1) Equipment Room: The equipment room shall have a curtain doorway to separate it from the work area, and share a common airlock with the shower room. The equipment room shall be large enough to accommodate at least one (1) worker (allowing them enough room to remove their protective clothing and footwear), and a 6-mil disposal bag for collection of discarded clothing and equipment. The equipment room shall be utilized for the storage of equipment and tools after decontamination using a HEPA-vacuum and/or wet cleaning. A one-day supply of replacement filters, in sealed containers, for HEPA-vacuums and negative air machines, extra tools, containers of surfactant, and other materials and equipment required for the project shall be stored here. A walk-off pan filled with water shall be placed in the work area just outside the equipment room for persons to clean foot coverings when leaving the work area. Contaminated footwear and reusable work clothing shall be stored in this room.

(2) Shower Room: The shower room shall have two (2) airlocks (one that separates it from the equipment room and one that separates it from the clean room). The shower room shall contain at least one (1) shower, with hot and cold water adjustable at the tap, per eight (8) workers. Careful attention shall be given to the shower to ensure against leaking of any kind. Contractor shall supply towels, shampoo and liquid soap in the shower room at all times. Shower water shall be drained collected, and filtered through a system with at least a 5-micron particle size collection capacity. A system containing a series of several filters with progressively smaller pore sizes shall be used to avoid rapid clogging of the filters by large particles. Filtered water shall be discharged in accordance with applicable codes. Contaminated filters shall be disposed of as asbestos waste.

(3) Clean Room: The clean room shall share a common airlock with the shower room and shall have a curtained doorway to separate it from outside noncontaminated areas. Lockers, for storage of workers' street clothing, and shelves, for storing respirators, shall be provided in this area. Clean disposable clothing, replacement filters for respirators, and clean dry towels shall be provided in the clean room. The clean room shall not be used for the storage of tool, equipment or other materials.

(B) Small Asbestos Projects:

Provide a worker decontamination facility in accordance with, Title 15, Chapter 1, OSHA Standard 29 CFR 1926.1101, 12NYCRR Part 56 and as specified herein. Unless approved by NYCDEP and the City, worker decontamination facilities shall be attached to the work areas.

(a) Structure:

(1) Use modular systems or build using wood or metal frame studs, joists, and rafters placed at a maximum of 16-inches on-center.

(2) When worker decontamination unit is located outdoors, in areas with public access, or in correctional facilities, frame work shall be lined with minimum 3/8" thickness plywood sheathing. Sheathing shall be caulked or taped airtight at all joints and seams.

(3) Interior shall be covered with two (2) layers of opaque 6-mil polyethylene sheeting, with a minimum overlap of 12-inches at seams. Seal seams airtight using tape and adhesive. The interior floor shall be covered with two (2) layers of reinforced fire-retardant polyethylene sheeting with a minimum overlap on the walls of twelve (12) inches.

(4) Entrances to the decontamination unit shall be secured with lockable hinged doors. Doors shall be open at all times when abatement operations are in progress. Doors shall be louvered to allow for air movement through the decontamination units into work area.

(b) Curtained Doorways: A device to allow ingress or egress from one room to another while permitting minimal air movement between the rooms.

(c) Air Locks: Air locks shall consist of two (2) curtained doorways placed a minimum of three (3) feet apart.

(d) Decontamination Enclosure System shall be placed adjacent to the work area and shall consist of three (3) totally enclosed chambers, separated from work area and each other by airlocks, as follows:

(1) Shower Room: The shower room shall have two (2) airlocks (one that separates it from the work area and one that separates it from the clean room). The shower room shall contain at least one (1) shower, with hot and cold water adjustable at the tap, per eight (8) workers. Careful attention shall be given to the shower to ensure against leaking of any kind. The Contractor shall supply towels, shampoo and soap in the shower room at all times. Shower water shall be drained collected, and filtered through a system with at least a 5-micron particle size collection capacity. A system containing a series of several filters with progressively smaller pore sizes shall be used to avoid rapid clogging of the filters by large particles. Filtered water shall be discharged in accordance with applicable codes. Contaminated filters shall be disposed of as asbestos waste.

(2) Clean Room: The clean room shall share a common airlock with the shower room and shall have a curtained doorway to separate it from outside noncontaminated areas. Lockers, for storage of workers' street clothing, and shelves, for storing respirators, shall be provided in this area. Clean disposable clothing, replacement filters for respirators, and clean dry towels shall be provided in the clean room. The clean room shall not be used for the storage of tools, equipment or other materials.

(C) Decontamination Enclosure System Utilities: Lighting, heat, and electricity shall be provided as necessary by the Contractor, and as specified herein.

79.11.3.2 WASTE DECONTAMINATION FACILITY

(A) Large Asbestos Project (Small Project Option):

Provide a worker decontamination facility in accordance with, Title 15, Chapter 1, OSHA Standard 29 CFR 1926.1101, 12NYCRR Part 56 and as specified herein. Unless approved by NYCDEP and the City, worker decontamination facilities shall be attached to the work areas.

(a) Structure:

(1) Use modular systems or build using wood or metal frame studs, joists, and rafters placed at a maximum of 16-inches on-center.

(2) When worker decontamination unit is located outdoors, in areas with public access, or in correctional facilities, frame work shall be lined with minimum 3/8" thickness plywood sheathing. Sheathing shall be caulked or taped airtight at all joints and seams.

(3) Interior walls shall be covered with two (2) layers of opaque 6-mil polyethylene sheeting, with a minimum overlap of 12-inches at seams. Seal seams airtight using tape and adhesive. The interior floor shall be covered with two (2) layers of reinforced fire-retardant polyethylene sheeting with a minimum overlap on the walls of twelve (12) inches.

(4) Entrances to the decontamination unit shall be secured with lockable hinged doors. Doors shall be open at all times when abatement operations are in progress. Doors shall be louvered to allow for air movement through the decontamination units into the work area.

(b) Curtained Doorways: A device to allow ingress or egress from one room to another while permitting minimal air movement between the rooms.

(c) Air Locks: Air locks shall consist of two (2) curtained doorways placed a minimum of three (3) feet apart.

(d) Decontamination Enclosure System shall be placed adjacent to the work area and shall consist of three (3) totally enclosed chambers, separated from the work area and each other by airlocks, as follows:

(1) Washroom: An equipment washroom shall have two (2) air locks (one separating the unit from the work area and one common air lock that separates it from the holding area. The washroom shall have facilities for washing material containers and equipment. Gross removal of dust and debris from contaminated material containers and equipment shall be accomplished in the work area, prior to moving to the washroom.

(2) Holding Area: A holding area shall share a common air lock with the equipment washroom and shall have a curtained doorway to outside areas. A hinged, lockable door shall be placed at the holding area entrance to prevent unauthorized access into the work area.

(B) Decontamination Enclosure System Utilities: Lighting, heat, and electricity shall be provided as necessary by the Contractor, and as specified herein.

79.11.3.3 PERSONNEL ENTRANCE AND DECONTAMINATION PROCEDURES FOR REMOVAL OPERATIONS UTILIZING REMOTE DECONTAMINATION FACILITIES

(A) All individuals who enter the work area shall sign the entry log, located in the clean room, upon each entry and exit. The log shall be permanently bound and shall fully identify the facility, agents, contractor(s), the project, each work area, and worker respiratory protection employed. The job supervisor shall be responsible for the maintenance of the log during the abatement activity.

(B) Each worker shall remove street clothes in the clean room; wear two (2) disposable suits, including gloves, hoods and non-skid footwear; and put on a clean respirator (with new filters) before entering the work area.

(C) Each worker shall, before leaving the work area or tent, clean the outside of the respirators and outer layer of protective clothing by wet cleaning and/or HEPA-vacuuming. The outer disposable suit shall be removed in the airlock prior to proceeding to the Worker Decontamination Unit. The inner disposable suit and respirator shall be wet wiped and HEPA-vacuumed thoroughly before removing and prior to aggressive shower.

(D) Following showering and drying off, each worker or authorized visitor shall proceed directly to the clean room, dress in street clothes, and exit the decontamination enclosure system immediately.

79.11.4 PREPARATION OF WORK AREA AND REMOVAL PROCEDURES

79.11.4.1 REMOVAL OF ASBESTOS-CONTAINING MATERIAL

(A) Contractor shall be responsible for the proper removal of ACM from the work area using standard industry techniques. The Testing Laboratory representative shall observe the work.

General Requirements:

(a) Removal of ACM shall be performed using wet methods. Dry removal of ACM is prohibited.

(b) Spray ACM with amended water with sufficient frequency and quantity to enhance penetration. Sufficient time shall be allowed for amended water to penetrate the material to the substrate prior to removal. All ACM shall be thoroughly wetted while work is being conducted.

(c) Accumulation of standing water on the floor of the work area is prohibited.

(d) Apply removal encapsulants, when used, in accordance with the manufacturer's recommendations and guidelines.

(e) Containerize ACM immediately upon detachment from the substrate.

(f) Pre-Removal Inspections:

(1) Prior to removal of any ACM, the Contractor shall notify the Testing Laboratory and request a pre-removal inspection. Posting of warning signs, building of decontamination enclosure systems, and all other preparatory steps have been taken prior to notification of the Testing Laboratory.

(2) Contractor shall correct any deficiencies observed by Testing Laboratory at no additional cost to City.

(3) Following the Testing Laboratory's approval of the work area preparations, removal of ACM may commence.

(B) Removal of Duct Insulation shall be as follows:

Work shall be performed as outlined in the Duct Insulation removal procedures (see Appendix) approved by the New York City Department of Environmental Protection (NYCDEP).

79.11.4.2 MAINTENANCE OF CONTAINED WORK AREA AND DECONTAMINATION ENCLOSURE SYSTEMS

(A) Ensure that barriers are installed in a manner appropriate to the expected weather conditions during the project and for its duration. Repair damaged barriers and remedy defects immediately upon their discovery. Visually inspect barriers at the beginning and end of each work period.

(B) Visually inspect nonwork areas and the decontamination enclosure system for water leakage. Perform the visual inspection a minimum of two (2) times for each 8-hour work shift.

79.11.5 ASBESTOS WASTE MANAGEMENT

79.11.5.1 ACM WASTE REQUIREMENTS

(A) The Contractor and all subcontractors are specifically alerted to the illegal practice of combining asbestos-containing waste (ACW) from one project with the ACW of other projects without using the services of a permitted waste transfer station as defined by 6 NYCRR Part 360 and 364. As part of the shop drawing submittals, the Contractor must submit for approval the proposed method of transportation and disposal that will be utilized to manage the ACW of this contract. If a permitted transfer station is to be used, payment for the cost shall be made under the item labeled "ALLOWANCE FOR ASBESTOS ABATEMENT WORK PERFORMED ON EXISTING TRANSIT AUTHORITY DUCT INSULATION (REMOVAL OF ACM, REPLACEMENT WITH NON-ACM, AND SUPPORT AND PROTECTION OF EXISTING TRANSIT AUTHORITY DUCT, COMPLETE)". The Contractor must submit a waste manifest consistent with whatever approved method is utilized as part of the invoicing and payment procedures.

(B) The Contractor shall maintain compliance with the strictest set of regulations of Title 15, Chapter 1 of RCNY, NYC LL 70/85, NYS DOL ICR 56, USEPA, Asbestos Regulation 40 CFR Section 61.152, 29 CFR 1926.1101, 29 CFR 1910.1200 (F) of OSHA's Hazard Communication Standards, and other applicable standards.

NOTE: Any penalties incurred for failure to comply with any of the above regulations and/or fines imposed due to negligence of the Contractor will be the sole responsibility of the Contractor.

When presenting ACW for storage at the generation site, the Contractor shall:

(1) Wet down ACW in a manner sufficient to prevent all visible emissions of dust into the air.

(2) Seal material in a leak tight container while wet.

(3) Keep ACW separate from any other waste.

(C) When presenting ACW for storage away from the site of generation, the Contractor shall:

(1) Ensure that ACW has been properly packaged as per requirements above.

(2) Examine the containers of ACW to ensure that there are no breaks in the containers and that no visible dust is being released into the air.

(3) If examination reveals damage to a container of ACW the Contractor or person accepting the waste shall immediately wet down the ACW and repackage it into a clean leak tight container. The subsequent repackaging shall be the financial responsibility of the Contractor and occur at no cost to the City.

(4) Keep ACW separate from any other waste.

(D) When storing ACW - The Contractor shall:

(1) Ensure that the ACW has been sufficiently wetted down in tight containers.

(2) Rewet and repackage any damaged containers.

(3) Maintain at storage site an adequate supply of spare leak tight containers.

(4) Maintain at storage site an adequate supply of amended water.

(5) Keep ACW separate from any other waste.

(6) Keep ACW in a secured, enclosed, and locked container.

(7) If the Contractor has intention of sorting a quantity of ACW greater than or equal to 50-cubic yards, the Contractor shall:

Submit a written request and receive written approval from the City.

(E) When presenting for transport, the Contractor shall:

(1) Ensure that ACW has been sufficiently wetted down.

(2) Examine the integrity of the container's airtight seal.

(3) Rewet and repackage any damaged containers.

(4) Keep ACW separate from all other waste.

(5) Ensure that a person transporting asbestos waste holds a valid permit issued pursuant to law.

(6) Frequency of waste removal:

Properly packaged and labeled asbestos waste shall be removed from the site on a daily basis. Under no circumstance shall asbestos waste be stored on site without written approval from the City. The Waste Hauler and landfill shall be as indicated on the notifications to regulatory agencies.

(F) Waste Load-Out Through Equipment Decontamination Enclosure (Full Decontamination Facility): Place asbestos waste in disposal bags. Large items not able to fit into disposal bags shall be insulationped in one (1) layer of 6-mil thick polyethylene sheeting. Clean outer covering of asbestos waste package by wet cleaning and/or HEPA-vacuuming in a designated part of the work area. Move insulationped asbestos waste to the equipment washroom, wet clean each bag or object and place it inside a second disposal bag, or a second layer of 6-mil polyethylene sheeting, as the item's physical characteristics demand. Air volume shall be minimized, and the bags or sheeting shall be sealed airtight with tape.

(1) The clean containerized items shall be moved to the equipment decontamination enclosure holding area pending load-out to storage or disposal facilities.

(2) Workers who have entered the equipment decontamination enclosure system from the uncontaminated nonwork area shall perform load-out of containers from the decontamination enclosure holding area. Dress workers moving asbestos waste to storage or disposal facilities in clean overalls of a color different than from that of coveralls used in the work area. Ensure that workers do not enter from uncontaminated areas into the equipment washroom or the work area. Ensure that contaminated workers do not exit the work area through the equipment decontamination enclosure system.

(3) Thoroughly clean the equipment decontamination enclosure system immediately upon completion of the waste load-out activities, and at the completion of each work shift.

(4) Labeled ACM waste containers or bags shall not be used for non-ACM debris or trash. Any materials placed in labeled containers or bags, including those turned "inside-out", shall be handled and disposed of as ACM waste.

(G) All asbestos materials, wastes, shower water, polyethylene, disposable equipment and supplies shall be disposed of as contaminated waste, in accordance with the EPA regulation (40 CFR, Section 61.150) and those requirements of the New York Department of Environmental Conservation and New York City Department of Sanitation.

(H) All asbestos materials shall be prepared for transportation in accordance with this specification and all applicable Federal, State, County and City Regulations. The Contractor shall submit the following documentation:

(1) Where applicable, an EPA Generator's identification number which has been obtained from the EPA for all asbestos waste generated from the project.

(2) Applicable State Waste Hauler license and registration numbers.

(3) Federal Hazardous Materials Waste Hauler number.

(4) Designated landfill EPA Permit numbers.

(I) Prior to loading asbestos waste the enclosed cargo areas (dumpster) shall be prepared as follows:

(1) Clean via HEPA-vacuum and wet wipe techniques the enclosed cargo areas of all visible debris prior to preparing with polyethylene.

(2) Line the cargo area with two (2) layers of 6-mil polyethylene sheeting to prevent contamination from damaged or leaking containers. Floor sheeting shall be installed first and extend up the walls a minimum of 24-inches. Wall sheeting shall be overlapped and taped securely into place.

(J) Asbestos-containing waste shall be placed on level surfaces in the cargo area of the dumpster and shall be packed tightly to prevent any shifting or tipping of the waste during transportation.

(K) Asbestos-containing waste shall not be thrown into or dropped from the dumpster. All material shall be handled carefully to prevent rupture of the containers.

(L) All personnel engaged in handling and loading of contaminated waste outside of the work area shall wear protective clothing. The disposable clothing shall include head, body and foot protection and color of clothing shall be different from abatement personnel in the work area. Minimum respiratory protection shall be half face, dual cartridge, air purifying respirators with HEPA-filters.

(M) The Contractor shall immediately clean debris or residue observed on containers or surfaces outside of the work area. Cleaning shall be via HEPA equipped wet/dry vacuums only.

(N) All asbestos-containing waste shall be transported from the abatement site to the landfill by a registered Waste Hauler. When transporting ACW:

(1) Ensure that the ACW has been sufficiently wetted down in a leak tight container.

(2) Rewet and repackage any damaged containers.

(3) Maintain at storage site an adequate supply of spare leak tight containers.

(4) Maintain at storage site an adequate supply of amended water.

(5) Keep ACW separate from any other waste.

(O) Keep ACW in a secured, enclosed, and locked container.

(P) Waste transport documents shall conform to the requirements of the U.S. Department of Transportation, Hazardous Materials Transportation Regulation, 49 CFR Part 173 and EPA 40 CFR 61.150 (d)(1)(2). Shipping documents shall be clearly marked with the required designation "RQ Asbestos". The Contractor shall provide a copy of this document to the City.

(Q) A uniform hazardous waste manifest shall be prepared by the Contractor and signed by the Contractor each time the Contractor ships a dumpster load of Asbestos-Containing Waste Material. The uniform hazardous waste manifest shall include the site of waste generation, the names and addresses of the Transporter, the Contractor, and the landfill operator with information on the type and number of asbestos-waste containers, time and date. The Contractor shall provide the Engineer,

Testing Laboratory or authorized designated representative with signed copies of the waste manifest before each departure.

(R) The Contractor or the Contractor's registered hazardous Waste Hauler shall transport asbestos-containing waste material from the abatement site directly to the specified disposal site. The Contractor or Waste Hauler shall not accept material from any other site when transporting asbestos-containing waste material from the abatement site. The authorized DDC representative or Engineer reserves the right to travel with Contractor's Waste Hauler to the waste disposal site. No intermediate storage of waste material (i.e. Contractors warehouse) shall be permitted.

(S) Final or progress application for payments will not be processed unless all hazardous waste manifests generated to date have been received and reviewed by the Engineer.

(T) All asbestos materials, wastes, shower water, polyethylene disposable equipment and supplies shall be disposed of as contaminated waste, in accordance with the EPA regulation (40 CFR, Section 61.150) and those requirements of the New York State Department of Environmental Conservation and the New York Department of Sanitation.

(U) The Contractor shall transport all sealed drums to a landfill disposal site approved by the Department of Environmental Conservation and the EPA. Transportation shall be performed by a New York State registered Waste Hauler, where required. When presenting the ACW for disposal the Contractor or subcontractor shall:

(1) Ensure that waste container is properly labeled according to the National Emission Standard for Hazardous Air Pollutants (NESHAP); Asbestos Revision, 40 CFR, Part 61, Subpart M. The labels shall include the name of the waste generator and the location where the waste was generated.

(2) Comply with all applicable orders issued pursuant to asbestos disposal.

(3) Ensure that ACW has been sufficiently wetted down.

(4) Rewet and repackage any damaged containers.

(5) Keep ACW separate from all other wastes.

(V) The Contractor shall notify the waste disposal site, at least 24-hours prior to transportation of contaminated waste to be delivered. The Contractor shall determine if a larger notification period is required.

(W) At the site, the Contractor or Waste Hauler trucks shall approach the dump location as close as possible for unloading asbestos waste. Containers shall be carefully placed in the ground. Do not throw containers from truck.

(X) The Contractor or Waste Hauler shall inspect containers as they are unloaded at the disposal site. Material in damaged containers shall be repacked in empty containers, as necessary.

(Y) The Contractor or Waste Hauler shall not remove asbestos-containing waste material from drums unless required to do so by the disposal site City. Used drums shall be disposed of as asbestos-contaminated waste.

(Z) All personnel engaged in unloading of the containers at the waste site shall wear protective clothing. The disposable clothing shall include head, body and foot protection. Minimum respiratory protection shall be half face, dual cartridge, air purifying respirators with HEPA-filters. Workers shall remove their protective clothing at the disposal site, place it in labeled disposal bags and leave them with the deposited waste shipment.

(AA) For the compaction operation, the Contractor shall ensure that disposal sites personnel have been provided with personal protective equipment by the disposal operator. If the disposal site City has not provided this protective equipment, the Contractor shall supply protective clothing and respiratory protection for the duration of this operation (PAPR respirators are mandatory).

(BB) If containers are broken or damaged, the Contractor or Waste Hauler shall, using personnel who are properly trained and wearing proper protective equipment, shall repackage the waste in properly labeled containers. The Contractor shall then clean the entire truck and its contents using HEPA-vacuums and wet cleaning techniques until no visible residue is observed.

(CC) Following the removal of all containerized waste, the Contractor shall decontaminate the truck cargo area using HEPA-vacuums and/or wet cleaning techniques until no residue is observed. All 6-mil polyethylene sheeting shall be removed and discarded as asbestos-containing waste material along with contaminated cleaning material and protective clothing, in containers at the disposal site.

(DD) The transporter(s) of all asbestos waste shall not back-haul any items on returning from landfill/disposal site.

(EE) All asbestos waste shall be disposed of in an approved Asbestos Landfill site only.

(1) NO PERSON UNDER ANY CIRCUMSTANCES SHALL ABANDON A.C.W. The same shall be disposed of only by certified persons in approved landfills.

(2) A manifest form will be signed by the Landfill documenting receipt and acceptance of the asbestos-containing waste. This manifest will be furnished to the City of New York.

(3) It is the responsibility of the Asbestos Contractor to determine current waste handling, transportation and disposal regulations for the work site and for each waste disposal landfill. The Asbestos Contractor must comply fully with these regulations and all appropriate U.S. Department of Transportation, EPA and other Federal, State and Local entities' regulations and all other current legal requirements.

(4) The Asbestos Contractor shall obtain an agreement from the transporter(s) that the practice of "Back-Hauling" will not be engaged in, with respect to any and all waste loads taken from this site during the work.

(5) The Asbestos Contractor will document actual disposal of the waste at the designated landfill by having completed a Disposal Certificate and will provide a copy of the same to the Department of Design and Construction.

79.11.6 ACCEPTANCE

79.11.6.1 ACCEPTANCE

(A) Upon satisfactory completion of all decontamination procedures, a certificate will be issued by the Engineer with copies to all parties.

(B) A Letter Of Compliance stating that all the work on the project was performed in accordance with the specifications and all applicable Federal, State and Local regulations.

(C) All warranties as stated in the specifications.

79.11.7 MEASUREMENT AND PAYMENT

All costs associated with the work required by this specification for the removal and disposal of ACM and asbestos-contaminated duct insulation from existing Transit Authority duct that are exposed, the replacement of the removed ACM insulation with a Transit Authority approved non-asbestos containing

materials insulation, and the support and protection of the existing Transit Authority duct that are exposed and to remain in service at all times as required by these contract documents will be paid on a Time and Material basis in accordance with **Articles 25 and 26** of the Contract except as amended herein. Payment will be made under the item labeled "ALLOWANCE FOR ASBESTOS ABATEMENT WORK PERFORMED ON EXISTING TRANSIT AUTHORITY DUCT INSULATION (REMOVAL OF ACM, REPLACEMENT WITH NON-ACM, AND SUPPORT AND PROTECTION OF EXISTING TRANSIT AUTHORITY DUCT, COMPLETE)". This item shall be used exclusively for the costs associated with the removal and disposal of ACM and asbestos-contaminated duct insulation from existing Transit Authority duct that are exposed, the replacement of the removed ACM insulation with a Transit Authority approved non-asbestos containing materials insulation, and the support and protection of the existing Transit Authority duct that are exposed and to remain in service at all times as required by these contract documents.

No guarantee is given that this allowance for additional costs associated with the work required for the removal and disposal of ACM and asbestos-contaminated duct insulation from existing Transit Authority duct that are exposed, the replacement of the removed ACM insulation with a Transit Authority approved non-asbestos containing materials insulation, and the support and protection of the existing Transit Authority duct that are exposed and to remain in service at all times as required by these contract documents will in fact be required in this contract. The estimated price in the Bid Schedule is included in the total bid solely to insure a method of payment for performing this work as directed by the Engineer.

Payment made under this item shall be equal to the sum total of all vouchers submitted by the Contractor as payment for the cost of performing this work as approved by the Engineer. Payment under this item, including partial payments, will not be made until the Contractor has furnished satisfactory evidence to the Engineer that the Contractor has performed the work.

The voucher for the payment shall be submitted to the Engineer on a monthly basis.

The "fixed sum" in the Bid Schedule is for bidding purposes only and shall not be varied in the bid; however, the Contractor will be paid only for the actual work performed regardless of the fixed sum, which may be more or less than the amount fixed in the Bid Schedule.

Payment for Allowance For Asbestos Abatement Work Performed On Existing Transit Authority Duct Insulation (Removal Of ACM, Replacement With Non-ACM, And Support And Protection Of Existing Transit Authority Duct, Complete) will be made under the Item Number as calculated below:

The Item Number for Allowance For Asbestos Abatement Work Performed On Existing Transit Authority Duct Insulation (Removal Of ACM, Replacement With Non-ACM, And Support And Protection Of Existing Transit Authority Duct, Complete) has seven characters. (The decimal point is considered a character, the third character.)

(1) The first five characters shall define Allowance For Asbestos Abatement Work Performed On Existing Transit Authority Duct Insulation (Removal Of ACM, Replacement With Non-ACM, And Support And Protection Of Existing Transit Authority Duct, Complete):

79.11

(2) The sixth, seventh, eighth and ninth characters shall define Allowance For Asbestos Abatement Work Performed On Existing Transit Authority Duct Insulation (Removal Of ACM, Replacement With Non-ACM, And Support And Protection Of Existing Transit Authority Duct, Complete):

AATA - Allowance For Asbestos Abatement Work Performed On Existing Transit Authority Duct Insulation (Removal Of ACM, Replacement With Non-ACM, And Support And Protection Of Existing Transit Authority Duct, Complete)

(3) The Item Number together with Description and Pay Unit as provided in the Bid Schedule is provided below:

Item No.	Description	Pay Unit
79.11AATA	ALLOWANCE FOR ASBESTOS ABATEMENT WORK PERFORMED ON EXISTING TRANSIT AUTHORITY DUCT INSULATION (REMOVAL OF ACM, REPLACEMENT WITH NON-ACM, AND SUPPORT AND PROTECTION OF EXISTING TRANSIT AUTHORITY DUCT, COMPLETE)	F.S.

APPENDIX

NYCDEP ATTACHMENTS

NYC DEP Asbestos Control Program VAR #_____

ATTACHMENT TM
REQUIREMENTS FOR MODIFIED TENT PROCEDURES (FOR GROSS ABATEMENT)
APPLIES TO VARIANCES FROM TITLE 15, CHAPTER 1, RULES OF THE CITY OF NEW YORK, SECTIONS 1-81(m) AND 1-91(c) {15 RCNY § 1-81(m) AND § 1-91(c)}

1. All tent enclosures and contiguous spaces within a radius of 10 feet shall be roped off and regulated to allow only certified workers and authorized visitors to enter.

2. 15 RCNY § 1-106 shall be complied with except that
   i. all tents shall be lined with 2 layers of plastic sheeting (6-mil thickness at a minimum);
   ii. the amounts of ACM that may be abated in each modified tent shall **NOT EXCEED** (a) 160 square feet and/or (b) 260 linear feet.
   iii. the total amount of ACM that may be abated at any one time in several modified tents shall **NOT EXCEED** 1,000 combined square feet plus linear feet.

3. All modified tents shall be fully framed (including horizontally across the top, if applicable) with 2x3 (minimum) wood or metal studs spaced not more than 36 inch center-to-center vertically around all sides (except at the entry/exit which shall not exceed 36 inch width); and

4. A minimum of one air volume change per 15 minutes through each modified tent shall be maintained.

5. An airlock having at least 3 feet length between the two curtained doorways shall be constructed at the entrance to each and every tent if the decontamination unit is not attached to the tents, and

6. If a decontamination unit is not attached to each tent, located within each airlock there shall be extra clean and uncontaminated disposable protective suits (e.g.Tyveks), and one such clean suit shall be worn by each worker in the airlock, immediately after removal of the outer suit as per 15 RCNY § 1-106(k), before each worker exits any airlock.

7. Any decontamination unit that is not attached to a tent (i.e. that is remote from a tent) shall be constructed in compliance with the requirements of Attachment D and must be located on the same floor as the modified tents.

8. Decontamination units that are attached to tents shall comprise at least a shower room and a clean room, with one curtained doorway separating them, and with a second curtained doorway separating the tent from the shower room.

9. After the ACM removal and bagging [refer 15 RCNY § 1-106(f) and (g)], the bagged waste shall be HEPA-vacuumed then wet cleaned and transferred into the airlock or into the shower room (as per Items 5 and 8 above respectively) for double bagging, and thereafter the double-bagged waste shall be transferred outside the airlock or outside the clean room for its final transfer to storage in a holding area and/or to legal means of disposal.

10. If the integrity of the tent is compromised and/or visible emissions are detected outside the tent and/or levels exceed 0.01 f/cc work shall stop and 15 RCNY § 1-45(a) shall be complied with immediately. Post-abatement clearance air samples shall be required in the areas outside the tent.

11. A minimum of 3 during area air samples and 3 post abatement clearance air samples must be taken in compliance with section 1-41 of the NYC DEP Asbestos Regulation for each modified tent.

NOTE: This attachment may be revised at any time by the Department.

TRU/JM 04/2005

NYC DEP ASBESTOS CONTROL PROGRAM VAR#_____

ATTACHMENT D
REMOTE WORKER DECONTAMINATION UNIT

APPLIES TO VARIANCE FROM TITLE 15, CHAPTER 1, RULES OF THE CITY OF NEW YORK SECTIONS 1-82(a) AND 1-83(a)* {15 RCNY § 1-82(a) AND § 1-83(a)*}.

1. The remote worker decontamination unit shall be constructed outside the work area, in accordance with 15 RCNY § 1-82, and attached to individual glovebag work areas (or tents) or common space leading to individual work areas.

2. The remote worker decontamination unit shall consist of, at least, a shower room, and a clean room separated from each other by an airlock and from the glovebag work area.

3. In addition to the shower heads, the shower room shall be provided with a flexible hose for equipment and waste decontamination.

4. The remote holding area for the asbestos containing waste shall comply with Title 16, Chapter 8, Rules of the City of New York (16RCNY 8 ET SEQ.)

5. The decontamination unit shall be maintained in accordance with 15 RCNY § 1-94 (except sub-section b).

6. All asbestos handlers shall wear two disposable suits, including gloves, hood and footwear, and appropriate respiratory equipment, after removing street clothes in the clean room, and must exit from the shower room.

7. Each worker, before leaving the glovebag work area (or tent), shall clean the outside of the respirators and outer protecting clothing by wet cleaning and/or HEPA vacuuming. The outer disposable suit shall be removed in the work area and the workers shall then proceed to the shower room. The inner disposable suit and respirator shall be washed thoroughly before removing and prior to aggressive shower.

8. After the ACM removal and bagging {refer 15 RCNY § 1-105(c)15}, the bagged waste shall be HEPA-vacuumed and then transferred to the shower room for wet cleaning and double bagging, prior to storage and disposal.

9. Worker and waste decontamination cannot take place at the same time and decontamination system shall be in place for the entire duration of the abatement activities.

10. The following additional conditions must be complied with in order to re-use an attached decontamination enclosure system(s) as a remote decontamination unit.

    i) Final air clearance must be achieved in the full containment area to which the decontamination enclosure system(s) is attached.

    ii) The decontamination enclosure system(s) shall be re-plasticized in accordance with 15 RCNY § 1-82.

*Required for projects disturbing 1,000 or more linear feet.

NOTE: This attachment may be revised at any time by the Department.

TRU/JM 4/2005

ATTACHMENT
ASBESTOS CONTAINING DUCT INSULATION REMOVAL PROCEDURE

The work procedure to be utilized for the removal of asbestos containing duct insulation shall be as follows:

I. Personal Protective Equipment

Prior to beginning work, all workers performing the removal of the duct insulation must equip themselves with the proper personal protective equipment (PPE). The PPE required for the removal of duct insulation includes:

(1) Tyvek suit with boot protection ("booties").
(2) Disposable gloves (latex ornitrile).
(3) Eye protection.
(4) Half face respirator with HEPA cartridges.

In addition to the PPE listed above, the tools and materials which will be required for this operation shall include the following:

(1) Amended water solution.
(2) 6-mil plastic sheeting.
(3) 6-mil plastic asbestos disposal bags.
(4) Disposable rags or wipes.
(5) Duct tape.
(6) Hand tools (chipping hammer, chisel, scraper, putty knife).
(7) Abrasive pads.
(8) Asbestos barrier tape.

NOTE: No power tools, grinders, sanders, or burning apparatus can be used to remove duct insulation.

II. Work Procedure

(A) Removal:

The following work procedure shall be employed when removing duct insulation:

(1) Set up the asbestos barrier tape around the perimeter of the excavation.
(2) Place 6-mil plastic sheeting under the duct to collect loose debris.
(3) Wet down duct insulation with amended water.
(4) Use hand tools to break away the large chunks of duct insulation. Place the removed insulation in a plastic asbestos disposal bag.
(5) Remove the amount of insulation around the required area of the duct necessary to perform the work associated with the installation of the trunk water main - the Engineer shall provide all markouts and make the final determination on quantities requiring removal.
(6) Ensure that the intact duct insulation on the duct is not damaged when performing the removal of materials from the excavation.
(7) For sections of duct left in the ground, seal all ends of exposed insulation with duct tape. Plastic insulation and duct tape on all coated duct will be removed from the site.
(8) In the event that some insulation material did not fall onto the plastic sheeting, collect these pieces and place them on the sheeting.
(9) Once duct insulation removal is completed and the exposed ends are sealed, fold the plastic sheeting onto itself and place it in a properly labeled asbestos bag.
(10) Wet wipe all equipment with amended water and rags before removal from work area. Place used rags and old work gloves in asbestos disposal bags.
(11) Ensure that bagged ACM is wet prior to transportation.

(12) ACM shall be properly labeled in accordance with OSHA Regulations 29 CFR 1926 58K(2), and shall be kept wet until disposal in compliance with Title 15, Chapter 1, Rules of the City of New York (15RCNY 1).

(B) Disposal:

The following work procedure shall be employed when disposing Duct Insulation:

(1) Double bag all waste materials. The inside and outside bags must have an asbestos label with the work location identified.
(2) Complete an asbestos waste tracking form and attach it to the bag.
(3) Place double bagged waste in a truck and transport it to an approved New York State asbestos landfill.
(4) All ACM waste bags must be picked up and disposed of on a daily basis at the end of each shift.

END OF THIS SECTION
This Section consists of forty-five (45) pages.

NO TEXT ON THIS PAGE

UI - PAGES UTILITY INTERFERENCES SECTION

NOTICE

THE PAGES CONTAINED IN THIS SECTION (UI - PAGES) REPRESENT ADDITIONAL CONTRACT REQUIREMENTS APPLYING TO WORK PERFORMED IN THE PRESENCE OF PRIVATELY OWNED UTILITY FACILITIES.

(NO TEXT ON THIS PAGE)

UTILITY INTERFERENCES (UI) SECTION

DATED: November 25, 2016

1. The Contractor shall be responsible for compliance with all the provisions of the following Sections and Schedules, which are hereby made a part of the original contract documents:

   A. "UI SECTION: Additional Contract Requirements Applying to Work Performed in the Presence of Privately Owned Utility Facilities" (Pages UI-3 through UI-11).

   B. Schedule U-1 (Page UI-13).

   C. Schedule U-2 Con Edison (Pages UI-14 through UI-43), Verizon (Pages UI-44 through UI-52) and Time Warner (Pages UI-53 through UI-55).

   D. Schedule U-3 Page UI-56 (as per the Private Utilities reference document for UI SECTION called "CET SPECIFICATIONS AND SKETCHES", dated November 2010), and Test Pits (Pages UI-57 through UI-78) in this Section UI-Pages; and,

   E. Utility drawings (27 Sheets) consisting of:
      * Con Edison – Low Tension Main and Services (8 sheets)
      * Con Edison – Conduit and Duct occupancy Plates (8 sheets)
      * Verizon – Existing Facility Plates (3 sheets)
      * Time Warner – Facility Plates (8 sheets)

      All Twenty-Seven (27) drawings are attached to the Plans.

2. Each facility operator shall provide inspectors at the work site to inspect methods of interference work, verify quantities and items of Utility Work, and coordinate all phases of the facility operator operations.

3. In addition, the following statements are made to provide clarification of various Paragraphs under UI Section:

   A. UI Section, Paragraph 4, requires the Contractor to immediately commence negotiations with each Company for an Interference Agreement under which the Company will compensate the Contractor for any Interference Work which the Company does not elect to perform with its own forces or by specialty contractors retained by the Company. Thus the Contractor is on notice that its work under the Contract may be affected by Interference Work performed by

(a) the Contractor pursuant to a separate Interference Agreement with the Company, (b) the Company, or (c) partly by each.

B. UI Section, Paragraph 2, informs the Contractor that the duration of the Contract as shown in Schedule A includes the time which may be necessary for the Contractor to perform the necessary Interference Work.

C. The Contractor is hereby informed that the duration of the Contract as shown in Schedule A includes the time which may be necessary for the Company to perform whatever portion of the Interference Work which the Company elects to perform with its own forces or by specialty contractors retained by the Company.

D. UI Section informs the Contractor that the City has entered into an Interference Agreement with the Companies regarding interferences to the City work in this Contract created by the facilities owned and/or operated by such Companies. Pursuant to this Section, a sample of the Utility Agreement letter as executed by the Companies is annexed on page UI-12, as an Exhibit to the Contract. Signed copies of those Utility Agreement letters are on file with New York City Department of Design and Construction (DDC).

E. The City has no contract with any of the Companies for work on or adjacent to the site of work under this Contract, and the Companies are not "Other Contractors" as defined for the purposes of this Contract. The Contractor is reminded, however, that pursuant to UI Section, Paragraph 4, the City will not compensate the Contractor for any direct and/or indirect costs related to Interference Work, regardless of whether such Interference Work is covered by an Interference Agreement between the Contractor and the Company or is performed by the Company using its own forces or by specialty contractors retained by the Company.

F. UI Section, Paragraph 14, provides that the provisions of UI Section are material provisions of the Contract and that the Contractor's failure to comply with the procedures set forth in UI Section are sufficient for the Commissioner to declare the Contractor in default pursuant to Article 48 of the Contract.

Pursuant to this Section, the Contractor is informed that the Performance Bond required of the Contractor pursuant to the Contract is not deemed to guarantee performance of any of the Interference Work.

Utility Interferences Section - Additional Contract Requirements Applicable to Work Performed in the Presence of Privately Owned Utility Facilities

The Contractor is hereby notified that pursuant to the law and franchise agreements issued by the City, certain private utility and public service companies named in Schedule U-1 ("the Companies") own and/or operate surface and/or subsurface facilities within the limits of this contract. The existence of these facilities impacts the productivity of the City work called for in the contract. In order to improve coordination of the City construction with the private utility facilities owned and/or operated by the Companies named in Schedule U-1, Article 1.06.30 of the Standard Highway Specifications of the New York City Department of Transportation, Dated August 1, 2015; and/or Articles 10.15 through 10.18 of the Standard Sewer and Water Main Specifications of the New York City Department of Environmental Protection, Dated July 1, 2014; as applicable, are amended and will be implemented as follows:

1. ***Pre-engineering:***

The anticipated scopes of private utility facilities interferences and anticipated work items and specifications are included in this contract. The locations of these interferences are indicated on the plans and/or listed in the specifications for this contract, and a schedule of estimated quantities by type of interference expected to be encountered within the limits of this project area have been listed on Schedule U-2. In addition, in Schedule U-3 the Companies have provided standard details and methods for supporting, protecting, relocating, and/or working around their facilities when they are in interference with City contract work.

2. ***Means and methods for City work***:

a) The Contractor is hereby notified that the utility interferences identified on the plans and/or listed in the Specifications to be known conditions which may impact the performance of, and/or interferes with, City work. The Contractor will be required to perform such utility work as directed by the Resident Engineer in order to clear all utility interferences from the project site as required for satisfactory completion of City work within specified contract schedule.

b) In areas serviced by overhead lines on poles carrying electric, telecommunication and cable system, the Contractor understands and by bidding for this contract agrees that he/she has reviewed the schedule of estimated quantities by type of interference expected to be encountered within the limits of this project and that he/she will be required to perform the public work in the presence of these overhead lines and appurtenances located in areas adjacent and/or within the project area. As a consequence he/she will select means and method of construction appropriate to maintain the safety clearances required or as permitted by contract specifications (e.g. "CET 350 – Overhead Accommodation Protection of Overhead Facilities, Poles, and Appurtenances") in order to avoid damaging the insulation or shielding of these lines and also to prevent knocking

them down. The duration of the contract as shown in Schedule A thus includes the time which may be necessary for the Contractor to remove, repair, protect, support, shift, temporarily remove and replace, work around and/or work in the presence of the Companies' facilities ("Interference Work") as described on the plans and/or specifications of the contract during the progress of the City work.

3. *Field inspection prior to construction*:

Prior to the start of any contract work in areas serviced by overhead electric lines , and after the award to the apparent low bidder for this contract, the Contractor must request a field walk of the project area along with the operator of the overhead electrical facilities and the DDC Engineer-In-Charge. At that time the facility operator, pursuant to contract specification (e.g. "CET 350 – Overhead Accommodation Protection of Overhead Facilities, Poles, and Appurtenances") will confirm the type and condition of the overhead electrical lines and the sufficiency of their insulating properties with respect to the means and methods proposed by the Contractor. The Contractor must be prepared to describe in enough details his/her proposed means and methods of construction operations in order to anticipate the likelihood that electric lines insulation would be cut or otherwise compromised. Also such details will allow the facility operator to anticipate the need for added insulation and/or shielding of non-insulated lines.

4. *Compensation for interference work:*

Compensation for Interference Work is a matter of adjustment between the Contractor and each private utility company located within the limits of the project area and whose utility facilities are affected by City contract work. In particular, the City will not compensate the Contractor for any direct and/or indirect costs related to Interference Work, including, but not limited to, delay, lost profit, increased overhead, or any other impact costs which are deemed to be included in cost agreement between the Contractor and private utility company affected by such work. Upon receipt of a Notice of Award from the City, the Contractor shall immediately commence negotiations with each of the Companies concerning the manner in which and the price for which the Contractor, through its own forces or by others hired by it, will perform and be paid by the Company for all necessary Interference Work as defined above that the Company(ies) choose(s) not to perform with its(their) own forces or by specialty Contractors hired by it (them) (as per "Interference Agreement"). Specialty contractors' work is limited to (i) insulation installation and removal, (ii) live gas and steam work, (iii) cleanup and disposal of hazardous materials, (iv) splicing live electrical and telecommunications facilities, and (v) work not within the competence of general construction contractors.

5. *Interference Agreement:*

a) The Companies have provided estimate of the quantity of each type of interferences expected to be encountered in the contract in Schedule U-2. The parties may negotiate an Interference Agreement in any format or manner they deem fit based on quantities and types of Interferences expected to be encountered on this Contract as stated in Schedule U-2.

b) Furthermore, in Schedule U-3, standard unit work measurement and payment provisions are specified and shall apply only if the Contractor and affected Utility companies enters into a unit price based on an Interference Agreement, otherwise the unit of work measurement, and payment provisions set forth in Schedule U-3 shall not apply. The Contractor shall notify the City upon concluding an Interference Agreement with each of the Companies, which shall be binding and final once concluded.

6. *City contract work to continue without Interference Agreement:*

If, prior to the start of construction, as directed by the City's Order to work / Notice To Proceed (OTW/ NTP) date any of the Companies and the Contractor have not concluded an Interference Agreement as described above, then the City will issue to private utility company (ies) in a written "48 Hours' notice to Public Corporation" in accordance with the Administrative Code of the City of New York. Construction will then proceed as ordered and the Contractor will be directed by the Resident Engineer (RE) to perform the City work on Time, Material and Equipment basis (T&M) as specified in standard City contract agreement Article 26.2. T&M records will include identification of types of utility facilities interfering with City work, utility facility owners, specifying the nature and quantity of any materials, plant and equipment furnished or used in connection with the performance of such work and crew size, such as: name and number of each worker employed on such work. T&M records will also indicate the hours of active time, standby time and idle time. The Company (ies) and the Contractor will maintain separate records of the actual quantity and cost of labor, materials, and equipment expended, and will provide copies of this information to the other party on a daily basis for reconciliation. These T&M records along with cost evaluations will be submitted daily to the Resident Engineer for review and approval. The total cost of City work will be based on quantity of work performed multiplied by unit price contract bid items. The total interference cost will be calculated as the difference between the total T&M cost and total cost for City work. The Resident Engineer will conduct a monthly reconciliation session of the daily T&M records with the affected Company (ies) and the Contractor. If the Contractor and affected utility companies cannot reconcile their T&M records, by the last day of each month, then the Resident Engineer will submit the approved City's T&M records along with total cost evaluations to the DDC Director of Construction who will review these records and recommend approval and validity certification by the DDC Construction Assistant Commissioner.

a) Copies of the DDC approved and certified T&M records will then be transmitted by the DDC to the Contractor and the utility companies. These certified records may be used by the Contractor for compensation claims against the responsible private facility owners, or may be used by any party as supporting documentation in dispute regarding compensation for performing Interference Work as identified in Schedule U-2. The Contractor will be required to perform City work while invoices are submitted by the Contractor to the utility companies for payment within 30 days, or while compensation disputes between the Contractor and affected company (ies) are submitted to Binding Arbitration process described in Paragraph 10.

b) All issues related to utility work and/or delays due to compensation disputes or claims against utility companies are not allowable as justification for granting contract time extensions or delay claims against the City. The City may assess liquidated damages specified in the contract for net overall delays suffered by City contract work as a result of utility issues, disputes and claims.

c) The standard City contract dispute resolution process specified in Article 27 "Presentation of disputes to Commissioner", of the standard City contract agreement is not applicable to any disputes related to utility work and/or compensation for such work or claim against utility companies. Utility work issues, disputes and claims may only be submitted to Binding Arbitration process described in Paragraph 10.

d) The Contractor will notify the Resident Engineer when utility capital work not specified in Schedule U-2 and/or for utility work that require the intervention of company utility specialty crews causes excessive contractor's labor and equipment standby or idleness and, thereby jeopardizing the City project schedule. The Resident Engineer will submit the facts to the DDC Director of Construction who will recommend to the DDC Deputy Commissioner regarding the issuance of a "48 Hours' notice to Public Corporation" to the concerned utility company as authorized by the New York City Administrative Code Section 19-143 and/or Section 24-521 as applicable.

e) Utility delays caused by utility capital work not listed in Schedule U-2 and/or by unavailability of utility specialty crews cannot be discounted for earning any contractual bonus when such bonus clause is included in a contract. However, if such specified bonus is not earned or is disallowed by the City or if the City assesses specified liquidated damages as a result of such excessive delays, the Contractor may seek damages from the responsible utility company (ies).

7. *Extra utility work with Interference Agreement:*

If during construction the Contractor encounters utility facilities interferences or utility scope of work that it believes is not covered by the Interference Agreement as described above, then the Contractor shall immediately notify the Company in writing, with a copy to the City, describing the nature and location of the extra work in question. The Company then has five (5) business days to investigate the conditions and then:

a) Advise the Contractor and the City in writing that no interference with its facilities exists at the location in question, and hence that the Contractor may proceed with City work without providing for any impact from Company facilities;

b) Advise the Contractor and the City in writing that the Interference Agreement negotiated pursuant to Paragraph 6, above, provides for the scope of work encountered, specifying the exact unit items and/or terms of the agreement that cover the work;

c) Advise the Contractor and the City in writing that it intends to perform the necessary utility work with company forces or with its own contractor including, but not limited to, relocating its facility out of the way of the proposed City work. In this case, the Company shall provide a written schedule for the performance of the utility work it proposes to perform, which shall be subject to approval by the City based on its impact to the Contractor's currently approved progress schedule. Upon approval of the Company's schedule by the City, the Contractor shall provide access to the worksite to the Company and/or any contractors hired by it to perform this utility work. If necessary, the City may grant a contract time extension for delays caused by the performance of such utility work by the company.

d) Reasonably specify in writing the scope of work to be performed by the Contractor on behalf of the Company that is not covered under the Interference Agreement negotiated pursuant to Paragraph 6, including, but not limited to, relocating, supporting, and/or protecting the Company's facilities, and/or shifting the City facility if approved by the Resident Engineer, and/or otherwise changing its operations to work in the presence of the Company's facilities. Should the Company elect this option, it must adequately define and provide an initial price offer for the work required to be performed.

8. *Means and Methods for utility work:*

Upon receipt of the Company's determination pursuant to Paragraphs 7.b, or 7.d, above, the Contractor shall determine reasonable means and methods of performing the work defined by the Company. These means and methods are subject to approval of the Company, which shall not be unreasonably withheld. If, however, the Company objects to the Contractor's proposed means and methods then it shall define an alternate method of construction. Upon receipt of the Company's approval or its

proposed alternate method of construction, the Contractor shall commence performance of the work defined by the Company as soon as possible, and shall perform the work in a good, workmanlike, and efficient manner, using the means and methods approved by the Company, in order to permit the City work to proceed in the most expeditious manner possible, but without imposing unreasonable and/or unnecessary costs on the Company. It is expressly understood by all parties that the City's rights pursuant to Article 4 of the Contract apply to Utility Work performed pursuant to this Section.

9. Disputed utility work covered by an interference agreement:

The City Work will continue as described in Paragraph 6 above. In the event of any dispute between the Company (ies) and the Contractor regarding any issue related to the performance of, or payment for, utility work, including, but not limited to, any indirect or impact costs incurred by the Contractor due to the Utility Work and/or to the existence of facilities owned or operated by the Company (ies) on the line of the work. The Company (ies) and the Contractor hereby agree to submit to each other a "Final Offer," in writing, by certified mail. Each party shall then have three business days to consider each other's Final Offer. In the event that neither party accepts the other's Final Offer within those three days, the Company (ies) and the Contractor agree to immediately submit the dispute to binding arbitration as described in Paragraph 10. During the pendency of any arbitration, the Company (ies) and the Contractor shall maintain separate records of the actual quantity and cost of labor, materials, and equipment expended, and to provide copies of this information to the other party on a daily basis for reconciliation. Any and all disagreement with the records maintained and provided by the other, must be documented in writing to all parties. However, these records are solely for the benefit of presentation to the arbitrator, whose decision may not necessarily be based on these records and in any event is final. Both parties should be aware that the City will not confirm or deny the accuracy of any records that is not certified by DDC. While the arbitration is pending, the Company shall pay the Contractor on a monthly basis, based on the price offered by the Company to the Contractor for the performance of the work.

10. Arbitration of utility work:

The arbitration of the issues described above shall be conducted pursuant to the Construction Industry Arbitration Rules of the American Arbitration Association (hereinafter "the Rules" and "AAA") in effect on the date the arbitration is initiated except as set forth herein. The arbitration award shall be final and binding upon the parties to the arbitration and judgment upon the award may be entered in a court having jurisdiction.

a) Once an arbitrator(s) has been appointed by the AAA, the arbitration shall be scheduled as promptly as possible given the arbitrator(s) and the parties' schedules.

b) No later than seven days prior to the first arbitration hearing, Company and the Contractor shall submit to the arbitrator(s), and to each other, a summary of each party's respective position and such other information as is deemed appropriate, along with a copy of each party's Final Offer as specified in Paragraph 9.

c) The arbitration shall be conducted and concluded in two days.

d) On the morning of the first day of the arbitration, the Contractor and/or representatives shall have 3 ½ hrs to make a presentation of its claim to the arbitrator. During its presentation, the Contractor shall not be permitted to produce any documents or cost records which have not already been provided to the Company. The Contractor shall be permitted to produce any analysis or description of its claim which has been prepared for the purpose of its presentation.

e) Company and/or its representatives shall have two hours to ask the Contractor questions about its claim and its presentation. Thereafter the arbitrator(s) shall have two hours to ask the Contractor questions about its claim and its presentation.

f) On the morning of the second day of the arbitration, Company and/or its representatives shall have 3 ½ hours to make a presentation of its claim to the arbitrator. During its presentation, the Company shall not be permitted to produce any documents or cost records which have not already been provided to the Contractor. The Company shall be permitted to produce any analysis or description of its claim which has been prepared for the purpose of its presentation.

g) The Contractor and/or its representatives shall have two hours to ask Company questions about its claim and its presentation. Thereafter the arbitrator(s) shall have two hours to ask Company questions about its claim and its presentation.

h) Subject to the above time limitations, the arbitrator(s) may conduct the arbitration in such manner as the arbitrator(s) deems reasonable.

i) The arbitrator(s) shall then have one week to select in writing, as the arbitrator ('s) award, that party's Final Offer which appears to be more reasonable, based on the presentations at the arbitration hearings.

j) The arbitrator shall have no discretion to grant an award other than one of the two Final Offers submitted by the parties.

k) Any award for work that has already been performed shall be paid on the 7th day after receipt of the arbitrator's decision, or on the 30th day after completion of the work, whichever is later. Payment for work not yet completed at the time of the arbitrator's decision shall be paid within 30 days of completion of work. Interest shall accrue from the date payment is due at the rate of 9% per annum. Either

party may cause judgment to be entered in accordance with the arbitrator(s) decision in a court in the State of New York, County of New York.

l) The arbitrator's fees and any other costs of the arbitration shall be initially shared equally by Company and the Contractor. The non-prevailing party shall then pay all arbitrator's fees and costs of the arbitration and shall reimburse the prevailing party for its share of such fees and costs theretofore paid.

m) The parties may, at any time, settle any matter submitted to arbitration.

11. Order-out waiver:

The Contractor and all subcontractors hired by it, if an Interference Agreement is executed as specified between the concerned parties, agree to waive any rights they may have, if any, under law, contract or otherwise to compel the City to assert any right the City may have, including the issuance of any directives required under the New York City Administrative Code, Section 19-143 and Section 24-521, to require any or all of the Companies to maintain, repair, replace, protect, support, shift, alter, relocate, and/or remove utility facilities in connection with the work to be performed under this contract. However, nothing in this Section shall preclude the City from exercising its rights under the Law to issue such a directive to the Company.

12. Cost of insurance:

Each of the named Companies, at their option and if an Interference Agreement is executed as specified between the concerned parties, may be named as an additional insured on all insurance policies required to be maintained under this contract. In the event that a Company opts to be so named as an additional insured, the actual incremental cost, if any, to the Contractor of providing such insurance coverage shall be borne by that Company. The Contractor shall provide a written statement from its insurance provider documenting the actual cost of this added coverage to the Company. Under no circumstances shall the cost of insurance coverage on behalf of any Company be borne by the City. Nothing in this paragraph shall be interpreted to imply the City's acceptance of any additional responsibility or liability for any matter related to the performance of Utility Work. In particular, the Company and the Contractor bear joint and full responsibility to ensure that any Utility Work performed by the Contractor is in compliance with all applicable government and Company regulations.

13. Cost of utility interference work:

The Companies, by virtue of participating in design alignment meetings and submitting their scope of Utility Interferences Work to the City, have agreed to perform their obligations described in this Section. It is expressly understood that the cost of Utility Work or any delays caused by such Utility Work shall not be a charge against the City, but shall be a matter for adjustment between the Contractor and the Company or Companies concerned. The City and the Contractor agree that the Companies are

third party beneficiaries of this Section of the contract, if an Interference Agreement is executed between the Contractor and utility company (ies). The provisions of this Section shall govern in all cases where Company property interferes with or is about to be disturbed by the City work, notwithstanding any other provision of the Contract, except for Natural Gas transmission/distribution facilities covered subject to the Gas Facility Cost Allocation Act (GFCAA) and covered separately in this contract.

14. Default declaration:

The Contractor agrees that the provisions of this Section are material provisions of the contract, and that the Contractor's failure to comply with the procedures set forth above are sufficient for the Commissioner to declare the Contractor in default pursuant to Article 48 of the Contract.

15. NYS Labor Law:

The Contractor is hereby advised that New York State Labor Law and/or, Davis-Bacon Act if federally funded, applies to public work. The work described in this Utility Interferences Section of the contract performed by utility company (ies) with their own forces or vendors hired by such company (ies) is not public work.

16. Facility operators:

The insurance requirements in Paragraph 12 of this UI Section apply to: (i) additional Companies, if any, who were not named in Schedule "A" but which have executed an Interference Agreement with the Contractor for utility work; and (ii) additional coverage, if any, paid for by Utility Companies whose utility facilities are located within the project limits, that they may require for the utility work pursuant to an Interference Agreement between the Contractor and such utility company (ies).

(End of Section)

PROJECT ID: BED798

"STANDARD UTILITY LETTER OF AGREEMENT"

(Name)
Deputy Commissioner, Infrastructure Division
Department of Design and Construction
30-30 Thomson Avenue
Long Island City, NY 11101

RE: City Work Performed in the Presence of Private Utility Facilities
Project No: _____

Dear (Name):

This letter is to certify that _____, has requested the inclusion of the attached "Utility Interferences (UI) Section: Additional contract requirements applying to work performed in the presence of privately owned utility." The company agrees to abide by the terms of this UI Section at the company's own expenses due to their facilities interferences with the Public work.

Sincerely,

_____
By: Authorized Company Representative

_____
Title

NOTARY PUBLIC

CERTIFIED AS TO FORM
AND LEGAL AUTHORITY:

By:_____

SCHEDULE U-1

LISTING OF COMPANY (IES) NAMED FOR THIS CONTRACT

COMPANY NAME	CONTACT NAME	CONTACT TELEPHONE
CON EDISON	THERESA KONG	212-460-4834
VERIZON	AUBREY MAKHANLALL	718-977-8165
TIME WARNER	JOHN PIAZZA	718-888-4261

SCHEDULE U-2

UTILITY INTERFERENCE
FOR INFORMATION ONLY
ENGINEER'S ESTIMATE OF QUANTITY AND TYPES OF INTERFERENCE
FOR CONSOLIDATED EDISON
BED-798
72" WATER MAIN REPLACEMENT IN FLATBUSH AVE WITH COMBINED SEWER

CET ITEM	DESCRIPTION	UNITS	ESTIMATED QUANTITY
CET 100.1	UTILITIES CROSSING TRENCH FOR CATCH BASIN CHUTE CONNECT. AND/OR TESTPIT (TYPE .1)	EA	7
CET 100.2	UTILITIES CROSSING TRENCH FOR CATCH BASIN CHUTE CONNECT. AND/OR TESTPIT (TYPE .2)	EA	10
CET 100.3	UTILITIES CROSSING TRENCH FOR CATCH BASIN CHUTE CONNECT. AND/OR TESTPIT (TYPE .3)	EA	4
CET 101.1	UTILITIES CROSSING TRENCH FOR SEWERS UP TO AND INCL. 24" DIAMETER (TYPE .1)	EA	10
CET 101.2	UTILITIES CROSSING TRENCH FOR SEWERS UP TO AND INCL. 24" DIAMETER (TYPE .2)	EA	3
CET 101.3	UTILITIES CROSSING TRENCH FOR SEWERS UP TO AND INCL. 24" DIAMETER (TYPE .3)	EA	1
CET 102.1	UTILITIES CROSSING TRENCH FOR SEWERS OVER 24" TO 36" DIAMETER (TYPE .1)	EA	17
CET 102.2	UTILITIES CROSSING TRENCH FOR SEWERS OVER 24" TO 36" DIAMETER (TYPE .2)	EA	3
CET 105.1	UTILITIES CROSSING TRENCH FOR SEWERS OVER 54" TO 60" DIAMETER (TYPE .1)	EA	1
CET 106.1	UTILITIES CROSSING TRENCH FOR SEWERS OVER 60" TO 72" DIAMETER (TYPE .1)	EA	5
CET 106.2	UTILITIES CROSSING TRENCH FOR SEWERS OVER 60" TO 72" DIAMETER (TYPE .2)	EA	5
CET 107.1	UTILITIES CROSSING TRENCH FOR SEWERS OVER 72" TO 84" DIAMETER (TYPE .1)	EA	5
CET 107.2	UTILITIES CROSSING TRENCH FOR SEWERS OVER 72" TO 84" DIAMETER (TYPE .2)	EA	2
CET 108.1	UTILITIES CROSSING TRENCH FOR WATERMAIN UP TO AND INCL. 12" DIAMETER (TYPE .1)	EA	31
CET 108.2	UTILITIES CROSSING TRENCH FOR WATERMAIN UP TO AND INCL. 12" DIAMETER (TYPE .2)	EA	15
CET 108.3	UTILITIES CROSSING TRENCH FOR WATERMAIN UP TO AND INCL. 12" DIAMETER (TYPE .3)	EA	2
CET 109.1	UTILITIES CROSSING TRENCH FOR WATERMAIN OVER 12" AND UP TO 24" (TYPE .1)	EA	5

October 7, 2016

UTILITY INTERFERENCE
FOR INFORMATION ONLY
ENGINEER'S ESTIMATE OF QUANTITY AND TYPES OF INTERFERENCE
FOR CONSOLIDATED EDISON

BED-798

72" WATER MAIN REPLACEMENT IN FLATBUSH AVE WITH COMBINED SEWER

CET ITEM	DESCRIPTION	UNITS	ESTIMATED QUANTITY
CET 109.2	UTILITIES CROSSING TRENCH FOR WATERMAIN OVER 12" AND UP TO 24" (TYPE .2)	EA	11
CET 109.3	UTILITIES CROSSING TRENCH FOR WATERMAIN OVER 12" AND UP TO 24" (TYPE .3)	EA	2
CET 110.2	UTILITIES CROSSING TRENCH FOR WATERMAIN OVER 24" AND UP TO 36" (TYPE .2)	EA	2
CET 112.2	UTILITIES CROSSING TRENCH FOR WATERMAIN OVER 48" AND UP TO 54" (TYPE .2)	EA	2
CET 115.1	UTILITIES CROSSING TRENCH FOR WATERMAIN OVER 72" AND UP TO 84" (TYPE .1)	EA	24
CET 115.2	UTILITIES CROSSING TRENCH FOR WATERMAIN OVER 72" AND UP TO 84" (TYPE .2)	EA	13
CET 115.3	UTILITIES CROSSING TRENCH FOR WATERMAIN OVER 72" AND UP TO 84" (TYPE .3)	EA	1
CET 200.1	EXTRA DEPTH EXCAVATION OF CATCH BASIN CHUTE CONNECTIONS (INVERT DEPTH 4'-6" TO 5' FOR TYPE 2 OR UP TO 5'-6 FOR TYPE 3)	LF	110
CET 200.2	EXTRA DEPTH EXCAVATION OF CATCH BASIN CHUTE CONNECTIONS (INVERT DEPTH 5' TO 6' FOR TYPE 2 OR > 5'-6" TO 6'-6" FOR TYPE 3)	LF	15
CET 225.1A	INSTALLATION AND REMOVAL OF CATCH BASINS WITH UTILITY INTERFERENCES	EA	24
CET 225.1B	INSTALLATION OF CATCH BASINS WITH UTILITY INTERFERENCES	EA	16
CET 225.1C	REMOVAL OF CATCH BASINS WITH UTILITY INTERFERENCES	EA	5
CET 300	SPECIAL CARE EXCAVATION AND BACKFILING	CY	36
CET 301	SPECIAL CARE HAND EXCAVATION OIL-O-STATIC ENCROACHMENT	CY	11
CET 302	FIELD COATING OF OIL-O-STATIC FEEDER PIPES	LF	40
CET 303	FURNISH, DELIVER AND INSTALL 3/8" CLEAN SAND BACKFILL	CY	4
CET 304 A	FURNISH, DELIVER AND INSTALL CONCRETE ROAD BASE	CY	27

October 7, 2016

UTILITY INTERFERENCE
FOR INFORMATION ONLY
ENGINEER'S ESTIMATE OF QUANTITY AND TYPES OF INTERFERENCE
FOR CONSOLIDATED EDISON

BED-798

72" WATER MAIN REPLACEMENT IN FLATBUSH AVE WITH COMBINED SEWER

CET ITEM	DESCRIPTION	UNITS	ESTIMATED QUANTITY
CET 305	FURNISH AND INSTALL ASPHALT PAVING MIXTURE	TONS	25
CET 330E-A.1	SUPPORT & PROTECT ELEC, GAS & STEAM FAC. DURING EXCAVATION OF CITY TRENCH WHEN FAC. LIE W/IN TRENCH LIMITS W/O SHEETING (TYPE .1)	LF	28
CET 330E-A.2	SUPPORT & PROTECT ELEC, GAS & STEAM FAC. DURING EXCAVATION OF CITY TRENCH WHEN FAC. LIE W/IN TRENCH LIMITS W/O SHEETING(TYPE .2)	LF	42
CET 330E-A.3	SUPPORT & PROTECT ELEC, GAS & STEAM FAC. DURING EXCAVATION OF CITY TRENCH WHEN FAC. LIE W/IN TRENCH LIMITS W/O SHEETING (TYPE .3)	LF	4
CET 330E-B.1	SUPPORT & PROTECT ELEC, GAS & STEAM FAC. DURING EXCAVATION OF CITY TRENCH WHEN FAC. LIE W/IN TRENCH LIMITS W/ SHEETING (TYPE .1)	LF	49
CET 330E-B.2	SUPPORT & PROTECT ELEC, GAS & STEAM FAC. DURING EXCAVATION OF CITY TRENCH WHEN FAC. LIE W/IN TRENCH LIMITS W/ SHEETING (TYPE .2)	LF	34
CET 400	TEST PITS FOR UTILITY FACILITIES	CY	41
CET 401	TRENCH EXCAVATION FOR ADJUSTMENT OF UTILITIES	CY	141
CET 402.1	EXISTING OCCUPIED CONCRETE ENCASED CONDUITS PLACED IN FINAL POSITION W/O CONCRETE ENCASEMENT	LF	1,640
CET 402.2	EXISTING OCCUPIED NON-CONCRETE ENCASED CONDUITS PLACED IN FINAL POSITION W/O CONCRETE ENCASEMENT	LF	160
CET 450.1	CONSTRUCTION FIELD SUPPORT REQUIRING AVERAGE SIZE SURVEY CREW PERFORMING TYPICAL SURVEY FUNCTIONS (TYPE .1)	CRHRS	1
CET 500	REMOVAL OF ABANDONED UTILITY CONDUITS (NON-CONCRETE ENCASED)	LF	5,121
CET 501	REMOVAL OF ABANDONED MASONRY FOR ELEC. AND TEL. FACILITIES	CY	438
CET 601.1	INSTALL CONDUIT IN PAVED AREA (1 EA. 2", 4" OR 5" CONDUIT - ALL TYPES)	LF	728
CET 636 ED SW	ADJUSTMENT OF UTILITY HARDWARE IN SIDEWALK (30" TO UNDER 34" WIDTH)	EA	2
CET 636 EH SW	ADJUSTMENT OF UTILITY HARDWARE IN SIDEWALK (75" TO UNDER 125" WIDTH)	EA	1
CET 636 MD	MOD. OF WORK METHODS TO ACCOMM. UTILITY STREET HARDWARE DURING PAVE MILL. & RESURF. OPS. (30" TO UNDER 34" WIDTH)	EA	1

October 7, 2016

UTILITY INTERFERENCE
FOR INFORMATION ONLY
ENGINEER'S ESTIMATE OF QUANTITY AND TYPES OF INTERFERENCE
FOR CONSOLIDATED EDISON

BED-798

72" WATER MAIN REPLACEMENT IN FLATBUSH AVE WITH COMBINED SEWER

CET ITEM	DESCRIPTION	UNITS	ESTIMATED QUANTITY
CET 636 ME	MOD. OF WORK METHODS TO ACCOMM. UTILITY STREET HARDWARE DURING PAVE MILL. & RESURF. OPS. (34" TO UNDER 41" WIDTH)	EA	1
CET 636 RM	REBUILDING & MODIFICATIONS OF UTILITY STRUCTURE	CY	29
CET 710.1	REMOVAL OF ABANDONED UTILITY STEEL/CAST IRON/PLASTIC, UP TO AND INCL. 12" DIAMETER PIPES	LF	766
CET 711	USE SHEETING LINE AS FORM	LF	14
CET 781	REMOVABLE CURB SIDEWALK PANEL FOR ACCESS TO UTILITY STRUCTURE OPENINGS	EA	3
CET 802A	SPECIAL MODIFICATION OF WORK FOR INSTALLATION OF NEW SIDEWALKS	SF	500
CET 802B	SPECIAL MODIFICATION OF WORK FOR INSTALLATION OF NEW CURBS	LF	409
CET 803.2	LINE CUT BY PNEUMATIC TOOLS IN LIEU OF SAW CUT ASSOCIATED W/ ROADWAY REMOVAL (ASPHALT & CONCRETE)	LF	40

October 7, 2016

CON EDISON SCOPE OF WORK
SUPPORT AND PROTECTION
BED-798
72" WATER MAIN REPLACEMENT IN FLATBUSH AVE WITH COMBINED SEWER

CET 100.1 UTILITIES CROSSING TRENCH FOR CATCH BASIN CHUTE CONNECT. AND/OR TESTPIT (TYPE .1) EA

At the following locations:

S/E/C 6th Ave. and St. Johns Pl. (Sht-8)
E/S 6th Ave. 22' N/N/C Union St. (Sht-8)
F/O#75 St. Marks Ave. (Sht-18)
S/S Prospect Pl., 90' E/E/C Flatbush Ave. (Sht-18_2)
S/S Prospect Pl., 20' E/E/C Flatbush Ave. (Sht-18_2)
F/O#116 Prospect Pl. (Sht-18_2)
S/W/C 8th Ave. and St. Johns Pl. (Sht-18_3)

Total Quantity for CET 100.1 = 7

CET 100.2 UTILITIES CROSSING TRENCH FOR CATCH BASIN CHUTE CONNECT. AND/OR TESTPIT (TYPE .2) EA

At the following locations:

S/E/C 6th Ave. and St. Johns Pl. (Sht-8)
S/E/C St. Johns Pl. and 6th Ave. (Sht-8)
E/S of 6th Ave., 30' N/N/C St. Johns Pl. (Sht-8)
N/E/C 6th Ave. and Sterling Pl. (Sht-8)
N/E/C 6th Ave. and Sterling Pl. (Sht-8)
F/O#1 8th Ave. (Sht-12)
E/S 6th Ave., 20' N/N/C Berkeley Pl. (Sht-9)
E/S of 7th Ave., 35' N/N/C St. Johns Pl. (Sht-10)
N/W/C 8th Ave. and Lincoln Pl. (Sht-12)
F/O#165 Park Pl. (Sht-18_2)

Total Quantity for CET 100.2 = 10

CET 100.3 UTILITIES CROSSING TRENCH FOR CATCH BASIN CHUTE CONNECT. AND/OR TESTPIT (TYPE .3) EA

At the following locations:

S/S Baltic St., 20' E/E/C 4th Ave. (Sht-15)
W/S St. Marks Ave. Bet. 6th Ave. to Flatbush Ave. (Sht-18)
On Park Pl., 35' E/E/C Carlton Ave. (Sht-18_2)
S/E/C Carlton Ave. and Park Pl. (Sht-18_2)

Total Quantity for CET 100.3 = 4

CON EDISON SCOPE OF WORK
SUPPORT AND PROTECTION
BED-798
72" WATER MAIN REPLACEMENT IN FLATBUSH AVE WITH COMBINED SEWER

CET 101.1	**UTILITIES CROSSING TRENCH FOR SEWERS UP TO AND INCL. 24" DIAMETER (TYPE .1)**	**EA**

At the following locations:

F/O#21 St. Johns Pl. (Sht-6)
F/O#35 St. Johns Pl. (Sht-6)
F/O#17 Park Pl. (Sht-7)
F/O#33 Park Pl. (Sht-7)
F/O#46 Park Pl. (Sht-7)
F/O#62 Park Pl. (Sht-7)
F/O#179 St. Johns Pl. (Sht-10)
F/O#187 St. Johns Pl. (Sht-10)
F/O#199 St. Johns Pl. (Sht-10)
F/O#211 St. Johns Pl. (Sht-10)

Total Quantity for CET 101.1 = 10

CET 101.2	**UTILITIES CROSSING TRENCH FOR SEWERS UP TO AND INCL. 24" DIAMETER (TYPE .2)**	**EA**

At the following locations:

F/O#49 St. Johns Pl. (Sht-6)
F/O#65 St. Johns Pl. (Sht-6)
W/S Int. of Baltic St. and 5th Ave. (Sht-7)

Total Quantity for CET 101.2 = 3

CET 101.3	**UTILITIES CROSSING TRENCH FOR SEWERS UP TO AND INCL. 24" DIAMETER (TYPE .3)**	**EA**

At the following locations:

N/E/C 5th Ave. and St. Johns Pl. (Sht-6)

Total Quantity for CET 101.3 = 1

CON EDISON SCOPE OF WORK
SUPPORT AND PROTECTION
BED-798
72" WATER MAIN REPLACEMENT IN FLATBUSH AVE WITH COMBINED SEWER

CET 102.1	**UTILITIES CROSSING TRENCH FOR SEWERS OVER 24" TO 36" DIAMETER (TYPE .1)**	**EA**

At the following locations:

F/O#101 St. Johns Pl. (Sht-10)
F/O#111 St. Johns Pl. (Sht-10)
F/O#125 St. Johns Pl. (Sht-10)
F/O#135 St. Johns Pl. (Sht-10)
F/O#137 St. Johns Pl. (Sht-10)
F/O#145 St. Johns Pl. (Sht-10)
F/O#184 St. Johns Pl. (Sht-10)
F/O#186 St. Johns Pl. (Sht-10)
F/O#186 St. Johns Pl. (Sht-10)
W Int. St. Johns Pl.& 7th Ave. (Sht-10)
F/O#358 Douglass St. (Sht-14)
F/O#384 Douglass St. (Sht-14)
F/O#408 Douglass St. (Sht-14)
S/S Baltic St., 150' E/E/C 4th Ave. (Sht-15)
F/O#634 Baltic St. (Sht-15)
F/O#664 Baltic St. (Sht-15)
S/S Baltic St., 50' E/E/C Gregory Pl. (Sht-15)

Total Quantity for CET 102.1 = 17

CET 102.2	**UTILITIES CROSSING TRENCH FOR SEWERS OVER 24" TO 36" DIAMETER (TYPE .2)**	**EA**

At the following locations:

S/S Douglass St., 55' W/W/C 5th Ave. (Sht-6)
E Int. St. Johns Pl.& 7th Ave. (Sht-10)
N/E Int. of 8th Ave. and St. Johns Pl. (Sht-12)

Total Quantity for CET 102.2 = 3

CET 105.1	**UTILITIES CROSSING TRENCH FOR SEWERS OVER 54" TO 60" DIAMETER (TYPE .1)**	**EA**

At the following locations:

S/E/C 6th Ave. and Park Pl. (Sht-8)

Total Quantity for CET 105.1 = 1

CON EDISON SCOPE OF WORK
SUPPORT AND PROTECTION
BED-798
72" WATER MAIN REPLACEMENT IN FLATBUSH AVE WITH COMBINED SEWER

CET 106.1 **UTILITIES CROSSING TRENCH FOR SEWERS OVER 60" TO 72" DIAMETER (TYPE .1)** **EA**

At the following locations:

F/O#205 6th Ave. (Sht-9)
F/O#201 6th Ave. (Sht-9)
F/O#193 6th Ave. (Sht-9)
S/E Int. 6th Ave. and Berkeley Pl. (Sht-9)
F/O#180 6th Ave. (Sht-9)

Total Quantity for CET 106.1 = 5

CET 106.2 **UTILITIES CROSSING TRENCH FOR SEWERS OVER 60" TO 72" DIAMETER (TYPE .2)** **EA**

At the following locations:

F/O#136 6th Ave. (Sht-8)
F/O#135 6th Ave. (Sht-8)
S/E Int. 6th Ave. and Berkeley Pl. (Sht-9)
F/O#175 6th Ave. (Sht-9)
N Int. 6th Ave. and Lincoln Pl. (Sht-9)

Total Quantity for CET 106.2 = 5

CET 107.1 **UTILITIES CROSSING TRENCH FOR SEWERS OVER 72" TO 84" DIAMETER (TYPE .1)** **EA**

At the following locations:

S/E Int. of Park Pl. and 5th Ave. (Sht-7)
F/O#17 Park Pl. (Sht-7)
F/O#35 Park Pl. (Sht-7)
F/O#51 Park Pl. (Sht-7)
F/O#62 Park Pl. (Sht-7)

Total Quantity for CET 107.1 = 5

CET 107.2 **UTILITIES CROSSING TRENCH FOR SEWERS OVER 72" TO 84" DIAMETER (TYPE .2)** **EA**

At the following locations:

S/W Int. of 6th Ave. and St. Johns Pl. (Sht-8)
E/S Int. 6th Ave. and St. Johns Pl. (Sht-8)

Total Quantity for CET 107.2 = 2

CON EDISON SCOPE OF WORK
SUPPORT AND PROTECTION
BED-798
72" WATER MAIN REPLACEMENT IN FLATBUSH AVE WITH COMBINED SEWER

CET 108.1	**UTILITIES CROSSING TRENCH FOR WATERMAIN UP TO AND INCL. 12" DIAMETER (TYPE .1)**	**EA**

At the following locations:

S/W Int. of Baltic St. and 5th Ave. (Sht-7)
N/W Int. Flatbush Ave. and Sterling Pl. (Sht-13)
F/O#358 Douglass St. (Sht-14)
F/O#384 Douglass St. (Sht-14)
F/O#408 Douglass St. (Sht-14)
S/S Baltic St., 20' E/E/C 4th Ave. (Sht-15)
F/O#129 Baltic St. (Sht-15)
S/S Baltic St., 150' E/E/C 4th Ave. (Sht-15)
S/S Baltic St., 190' E/E/C 4th Ave. (Sht-15)
F/O#634 Baltic St. (Sht-15)
S/S Baltic St., 50' E/E/C Gregory Pl. (Sht-15)
F/O#344 Butler St. (Sht-15)
F/O#350 Butler St. (Sht-16)
F/O#352 Butler St. (Sht-16)
F/O#354 Butler St. (Sht-16)
F/O#360 Butler St. (Sht-16)
F/O#364 Butler St. (Sht-16)
F/O#370 Butler St. (Sht-16)
F/O#374 Butler St. (Sht-16)
F/O#380 Butler St. (Sht-16)
F/O#384 Butler St. (Sht-16)
F/O#386 Butler St. (Sht-16)
F/O#390 Butler St. (Sht-16)
F/O#394 Butler St. (Sht-16)
F/O#396 Butler St. (Sht-16)

Total Quantity for CET 108.1 = 31

CON EDISON SCOPE OF WORK
SUPPORT AND PROTECTION
BED-798
72" WATER MAIN REPLACEMENT IN FLATBUSH AVE WITH COMBINED SEWER

CET 108.2 **UTILITIES CROSSING TRENCH FOR WATERMAIN UP TO AND INCL. 12" DIAMETER (TYPE .2)** **EA**

At the following locations:

S/S Douglass St., 55' W/W/C 5th Ave. (Sht-6)
S/W Int. of 5th Ave. and Douglass St. (Sht-6)
S/S Park Pl., 35' W/W/C 6th Ave. (Sht-8)
E Int. St. Johns Pl.& 7th Ave. (Sht-10)
N/E Int. 8th Ave. and Lincoln Pl. (Sht-12)
F/O#24 8th Ave. (Sht-12)
F/O#11 8th Ave. (Sht-12)
F/O#8 8th Ave. (Sht-12)
W Int. of 8th Ave. and St. Johns Pl. (Sht-12)
Opp#367 Flatbush Ave. (Sht-13)
N/W Int. Flatbush Ave. and Sterling Pl. (Sht-13)
E Int. Flatbush Ave. and Sterling Pl. (Sht-13)
F/O#381 Flatbush Ave. (Sht-13)

Total Quantity for CET 108.2 = 15

CET 108.3 **UTILITIES CROSSING TRENCH FOR WATERMAIN UP TO AND INCL. 12" DIAMETER (TYPE .3)** **EA**

At the following locations:

E Int. 4th Ave. and Douglass St. (Sht-14)
S/E Int. 4th Ave. and Baltic St. (Sht-15)

Total Quantity for CET 108.3 = 2

CET 109.1 **UTILITIES CROSSING TRENCH FOR WATERMAIN OVER 12" AND UP TO 24" (TYPE .1)** **EA**

At the following locations:

S/E/C 6th Ave. and Berkeley Pl. (Sht-9)
N/W Int. Flatbush Ave. and Sterling Pl. (Sht-13)

Total Quantity for CET 109.1 = 5

CON EDISON SCOPE OF WORK
SUPPORT AND PROTECTION
BED-798
72" WATER MAIN REPLACEMENT IN FLATBUSH AVE WITH COMBINED SEWER

CET 109.2 **UTILITIES CROSSING TRENCH FOR WATERMAIN OVER 12" AND UP TO 24" (TYPE .2)** **EA**

At the following locations:

S/E/C 6th Ave. and Park Pl. (Sht-8)
N/W Int. of 8th Ave. and St. Johns Pl. (Sht-12)
N/W Int. Flatbush Ave. and Sterling Pl. (Sht-13)
S/W/C Flatbush Ave. and Sterling Pl. (Sht-13)
N/E/C Flatbush Ave. and Sterling Pl. (Sht-13)
F/O#399 Flatbush Ave. (Sht-13)
N Int. Flatbush Ave. and 8th Ave. (Sht-13)

Total Quantity for CET 109.2 = 11

CET 109.3 **UTILITIES CROSSING TRENCH FOR WATERMAIN OVER 12" AND UP TO 24" (TYPE .3)** **EA**

At the following locations:

N/E Int. 6th Ave. and Berkeley Pl. (Sht-9)
N/E Int. 6th Ave. and Lincoln Pl. (Sht-9)

Total Quantity for CET 109.3 = 2

CET 110.2 **UTILITIES CROSSING TRENCH FOR WATERMAIN OVER 24" AND UP TO 36" (TYPE .2)** **EA**

At the following locations:

E/S Int. 6th Ave. and St. Johns Pl. (Sht-8)
N/W Int. of 8th Ave. and St. Johns Pl. (Sht-12)

Total Quantity for CET 110.2 = 2

CET 112.2 **UTILITIES CROSSING TRENCH FOR WATERMAIN OVER 48" AND UP TO 54" (TYPE .2)** **EA**

At the following locations:

N/E Int. of 8th Ave. and St. Johns Pl. (Sht-12)

Total Quantity for CET 112.2 = 2

CON EDISON SCOPE OF WORK
SUPPORT AND PROTECTION
BED-798
72" WATER MAIN REPLACEMENT IN FLATBUSH AVE WITH COMBINED SEWER

CET 115.1	**UTILITIES CROSSING TRENCH FOR WATERMAIN OVER 72" AND UP TO 84" (TYPE .1)**	**EA**

At the following locations:

F/O#22 St. Johns Pl. (Sht-6)
F/O#40 St. Johns Pl. (Sht-6)
F/O#54 St. Johns Pl. (Sht-6)
F/O#202 6th Ave. (Sht-9)
F/O#194 6th Ave. (Sht-9)
F/O#188 6th Ave. (Sht-9)
W Int. 6th Ave. and Berkeley Pl. (Sht-9)
F/O#180 6th Ave. (Sht-8)
F/O#101 St. Johns Pl. (Sht-10)
F/O#150 St. Johns Pl. (Sht-10)
F/O#162 St. Johns Pl. (Sht-10)
F/O#135 6th Ave. (Sht-10)
F/O#137 St. Johns Pl. (Sht-10)
F/O#145 St. Johns Pl. (Sht-10)
F/O#184 St. Johns Pl. (Sht-10)
F/O#186 St. Johns Pl. (Sht-10)
F/O#186 St. Johns Pl. (Sht-10)
W Int. St. Johns Pl.& 7th Ave. (Sht-10)
F/O#179 St. Johns Pl. (Sht-10)
F/O#194 St. Johns Pl. (Sht-10)
F/O#202 St. Johns Pl. (Sht-10)
F/O#214 St. Johns Pl. (Sht-10)
F/O#228 St. Johns Pl. (Sht-10)
F/O#236 St. Johns Pl. (Sht-10)

Total Quantity for CET 115.1 = 24

CON EDISON SCOPE OF WORK
SUPPORT AND PROTECTION
BED-798
72" WATER MAIN REPLACEMENT IN FLATBUSH AVE WITH COMBINED SEWER

CET 115.2 **UTILITIES CROSSING TRENCH FOR WATERMAIN OVER 72" AND UP TO 84" (TYPE .2)** **EA**

At the following locations:

F/O#68 St. Johns Pl. (Sht-6)
S/W Int. of 6th Ave. and St. Johns Pl. (Sht-8)
F/O#136 6th Ave. (Sht-8)
F/O#135 6th Ave. (Sht-8)
N/W/C 6th Ave. and Park Pl. (Sht-8)
W Int. 6th Ave. and Berkeley Pl. (Sht-9)
F/O#175 6th Ave. (Sht-9)
N/W Int. 6th Ave. and Lincoln Pl. (Sht-9)
F/O#164 6th Ave. (Sht-9)
E Int. St. Johns Pl.& 7th Ave. (Sht-10)
S/W Int. of 8th Ave. and St. Johns Pl. (Sht-12)
N Int. Flatbush Ave. and 8th Ave. (Sht-13)

Total Quantity for CET 115.2 = 13

CET 115.3 **UTILITIES CROSSING TRENCH FOR WATERMAIN OVER 72" AND UP TO 84" (TYPE .3)** **EA**

At the following locations:

S/E/C Flatbush Ave. and Sterling Pl. (Sht-13)

Total Quantity for CET 115.3 = 1

CET 200.1 **EXTRA DEPTH EXCAVATION OF CATCH BASIN CHUTE CONNECTIONS (INVERT DEPTH 4'-6" TO 5' FOR TYPE 2 OR UP TO 5'-6 FOR TYPE 3)** **LF**

At the following locations:

F/O#116 Prospect Pl. (Sht-18_2)
F/O#165 Park Pl. (Sht-18_2)
S/E/C Carlton Ave. and Park Pl. (Sht-18_2)

Total Quantity for CET 200.1 = 110

CET 200.2 **EXTRA DEPTH EXCAVATION OF CATCH BASIN CHUTE CONNECTIONS (INVERT DEPTH 5' TO 6' FOR TYPE 2 OR > 5'-6" TO 6'-6" FOR TYPE 3)** **LF**

At the following locations:

W/S St. Marks Ave. Bet. 6th Ave. to Flatbush Ave. (Sht-18)

Total Quantity for CET 200.2 = 15

CON EDISON SCOPE OF WORK
SUPPORT AND PROTECTION
BED-798
72" WATER MAIN REPLACEMENT IN FLATBUSH AVE WITH COMBINED SEWER

CET 225.1A	**INSTALLATION AND REMOVAL OF CATCH BASINS WITH UTILITY INTERFERENCES**	**EA**

At the following locations:

S/E/C 6th Ave. and St. Johns Pl. (Sht-8)
N/E/C 6th Ave. and Sterling Pl. (Sht-8)
N/E/C 6th Ave. and Sterling Pl. (Sht-8)
N/W/C 6th Ave. and Park Pl. (Sht-8)
N/W/C 6th Ave. and Park Pl. (Sht-8)
S/E/C 6th Ave. and Park Pl. (Sht-8)
N/S Union St., 20' E/E/C 6th Ave. (Sht-9)
F/O#193 6th Ave. (Sht-9)
E/S 6th Ave., 20' N/N/C Berkeley Pl. (Sht-9)
S/E/C 6th Ave. and Lincoln Pl. (Sht-9)
N/E/C 6th Ave. and Lincoln Pl. (Sht-9)
N/E/C 6th Ave. and Lincoln Pl. (Sht-9)
N/S of St. Johns Pl., 25' E/E/C 7th Ave. (Sht-10)
E/S of 7th Ave., 35' S/S/C St. Johns Pl. (Sht-10)
N/E/C 8th Ave. and Lincoln Pl. (Sht-12)
F/O#1 8th Ave. (Sht-12)
S/E/C Flatbush Ave. and Sterling Pl. (Sht-13)
S/S Baltic St., 20' E/E/C 4th Ave. (Sht-15)
W/S St. Marks Ave. Bet. 6th Ave. to Flatbush Ave. (Sht-18)
S/E/C Flatbush Ave. and Prospect Pl. (Sht-18_2)
F/O#165 Park Pl. (Sht-18_2)
S/E/C Carlton Ave. and Park Pl. (Sht-18_2)
S/E/C Flatbush Ave. and Sterling Pl. (Sht-18_3)
F/O#3 8th Ave. (Sht-18_3)

Total Quantity for CET 225.1A = 24

CON EDISON SCOPE OF WORK
SUPPORT AND PROTECTION
BED-798
72" WATER MAIN REPLACEMENT IN FLATBUSH AVE WITH COMBINED SEWER

CET 225.1B **INSTALLATION OF CATCH BASINS WITH UTILITY INTERFERENCES** **EA**

At the following locations:

S/W/C 6th Ave. and St. Johns Pl. (Sht-8)
S/E/C St. Johns Pl. and 6th Ave. (Sht-8)
E/S of 6th Ave., 30' N/N/C St. Johns Pl. (Sht-8)
W/S 6th Ave., 20' S/S/C Sterling Pl. (Sht-8)
E/S 6th Ave. 22' N/N/C Union St. (Sht-9)
S/S Berkeley Pl., 20' E/E/C 6th Ave. (Sht-9)
N/S Berkeley Pl., 20' E/E/C 6th Ave. (Sht-9)
E/S of 7th Ave., 35' N/N/C St. Johns Pl. (Sht-10)
N/W/C 8th Ave. and Lincoln Pl. (Sht-12)
N/S St. Johns Pl., 25' E/E/C 8th Ave. (Sht-9)
W/S Flatbush Ave., 35' S/S/C Sterling Pl. (Sht-13)
S/S of Douglass St., 20' E/E/C 4th Ave. (Sht-14)
F/O#75 St. Marks Ave. (Sht-18)
S/S Prospect Pl., 90' E/E/C Flatbush Ave. (Sht-18_2)
F/O#116 Prospect Pl. (Sht-18_2)
S/E/C St. Johns Pl. and 8th Ave. (Sht-18_3)

Total Quantity for CET 225.1B = 16

CET 225.1C **REMOVAL OF CATCH BASINS WITH UTILITY INTERFERENCES** **EA**

At the following locations:

S/W/C 6th Ave. and Sterling Pl. (Sht-8)
S/E/C 6th Ave. and Park Pl. (Sht-8)
F/O#188 6th Ave. (Sht-9)
S/E/C 8th Ave. and Lincoln Pl. (Sht-12)
S/W/C Prospect Pl. and Flatbush Ave. (Sht-18_2)

Total Quantity for CET 225.1C = 5

CON EDISON SCOPE OF WORK
SUPPORT AND PROTECTION
BED-798
72" WATER MAIN REPLACEMENT IN FLATBUSH AVE WITH COMBINED SEWER

CET 300	**SPECIAL CARE EXCAVATION AND BACKFILING**	**CY**

At the following locations:

F/O#40 St. Johns Pl. (Sht-6)
S/E Int. of Park Pl. and 5th Ave. (Sht-7)
F/O#17 Park Pl. (Sht-7)
F/O#35 Park Pl. (Sht-7)
F/O#53 Park Pl. (Sht-7)
W/S 6th Ave., 20' S/S/C Sterling Pl. (Sht-8)
W Int. 6th Ave. and Sterling Pl. (Sht-8)
S/S Park Pl., 30' W/W/C 6th Ave. (Sht-8)
F/O#201 6th Ave. (Sht-9)
E Int. 6th Ave. and Berkeley Pl. (Sht-9)
N/W Int. 8th Ave. and Lincoln Pl. (Sht-12)
F/O#16 8th Ave. (Sht-12)
N/W Int. of 8th Ave. and St. Johns Pl. (Sht-12)
N/E Int. of 8th Ave. and St. Johns Pl. (Sht-12)
N/W/C Flatbush Ave. and Sterling Pl. (Sht-13)
S/W/C Flatbush Ave. and Sterling Pl. (Sht-13)
E Int. Flatbush Ave. and Sterling Pl. (Sht-13)
S/S Sterling Pl., 30' W/W/C Flatbuch Ave. (Sht-13)
F/O#346 Flatbush Ave. (Sht-13)
F/O#399 Flatbush Ave. (Sht-13)
F/O#356 Flatbush Ave. (Sht-13)
N/W/C Flatbush Ave. and 8th Ave. (Sht-13)
F/O#351 Douglass St. (Sht-14)
F/O#153 Douglass St. (Sht-14)
S/E/C 4th Ave. and Baltic St. (Sht-15)
S/S Baltic St., 80' E/E/C 4th Ave. (Sht-15)
S/S Baltic St., 150' E/E/C 4th Ave. (Sht-15)
S/S Baltic St., 210' E/E/C 4th Ave. (Sht-15)
On Baltic St., Bet. F/O#129 to F/O#668 (Sht-15)
S/S Baltic St., 30' W/W/C 5th Ave. (Sht-15)
S/E Int. 4th Ave. and Butler St. (Sht-16)
On Park Pl., 35' E/E/C Carlton Ave. (Sht-18_2)

Total Quantity for CET 300 = 36

CON EDISON SCOPE OF WORK
SUPPORT AND PROTECTION
BED-798
72" WATER MAIN REPLACEMENT IN FLATBUSH AVE WITH COMBINED SEWER

CET 301 — **SPECIAL CARE HAND EXCAVATION OIL-O-STATIC ENCROACHMENT** — **CY**

At the following locations:

S/W/C Bergen St. and Flatbush Ave. (Sht-18)

AS ENCOUNTERED AND DIRECTED BY A CON EDISON REPRESENTATIVE

Total Quantity for CET 301 = 11

CET 302 — **FIELD COATING OF OIL-O-STATIC FEEDER PIPES** — **LF**

At the following locations:

S/W/C Bergen St. and Flatbush Ave. (Sht-18)

Total Quantity for CET 302 = 40

CET 303 — **FURNISH, DELIVER AND INSTALL 3/8" CLEAN SAND BACKFILL** — **CY**

At the following locations:

S/W/C Bergen St. and Flatbush Ave. (Sht-18)

Total Quantity for CET 303 = 4

CET 304 A — **FURNISH, DELIVER AND INSTALL CONCRETE ROAD BASE** — **CY**

At the following locations:

S/E/C 6th Ave. and St. Johns Pl. (Sht-8)
F/O#193 6th Ave. (Sht-9)
F/O#193 6th Ave. (Sht-9)
W/S Flatbush Ave., 35' S/S/C Sterling Pl. (Sht-13)
S/S of Douglass St., 20' E/E/C 4th Ave. (Sht-14)
S/S Prospect Pl., 90' E/E/C Flatbush Ave. (Sht-18_2)
F/O#3 8th Ave. (Sht-18_3)
E/S 6th Ave. 22' N/N/C Union St. (Sht-9)
W Int. St. Johns Pl.& 7th Ave. (Sht-10)

Total Quantity for CET 304 A = 27

CON EDISON SCOPE OF WORK
SUPPORT AND PROTECTION
BED-798
72" WATER MAIN REPLACEMENT IN FLATBUSH AVE WITH COMBINED SEWER

CET 305 **FURNISH AND INSTALL ASPHALT PAVING MIXTURE** **TONS**

At the following locations:

S/E/C 6th Ave. and St. Johns Pl. (Sht-8)
F/O#193 6th Ave. (Sht-9)
F/O#193 6th Ave. (Sht-9)
W/S Flatbush Ave., 35' S/S/C Sterling Pl. (Sht-13)
S/S of Douglass St., 20' E/E/C 4th Ave. (Sht-14)
S/S Prospect Pl., 90' E/E/C Flatbush Ave. (Sht-18_2)
E/S 6th Ave. 22' N/N/C Union St. (Sht-9)
W Int. St. Johns Pl.& 7th Ave. (Sht-10)

Total Quantity for CET 305 = 25

CET 330E-A.1 **SUPPORT & PROTECT ELEC, GAS & STEAM FAC. DURING EXCAVATION OF CITY TRENCH WHEN FAC. LIE W/IN TRENCH LIMITS W/O SHEETING (TYPE .1)** **LF**

At the following locations:

N/W Int. 6th Ave. and Lincoln Pl. (Sht-9)
F/O#164 6th Ave. (Sht-9)
N/E/C 8th Ave. and Lincoln Pl. (Sht-12)
N/E Int. Douglass St. and 4th Ave. (Sht-14)

Total Quantity for CET 330E-A.1 = 28

CET 330E-A.2 **SUPPORT & PROTECT ELEC, GAS & STEAM FAC. DURING EXCAVATION OF CITY TRENCH WHEN FAC. LIE W/IN TRENCH LIMITS W/O SHEETING(TYPE .2)** **LF**

At the following locations:

S/S Baltic St., 15' W/W/C 5th Ave. (Sht-7)
N/S Berkeley Pl., 20' E/E/C 6th Ave. (Sht-9)
N/E/C Flatbush Ave. and Sterling Pl. (Sht-13)

Total Quantity for CET 330E-A.2 = 42

CET 330E-A.3 **SUPPORT & PROTECT ELEC, GAS & STEAM FAC. DURING EXCAVATION OF CITY TRENCH WHEN FAC. LIE W/IN TRENCH LIMITS W/O SHEETING (TYPE .3)** **LF**

At the following locations:

S/E/C 6th Ave. and St. Johns Pl. (Sht-8)

Total Quantity for CET 330E-A.3 = 4

CON EDISON SCOPE OF WORK
SUPPORT AND PROTECTION
BED-798
72" WATER MAIN REPLACEMENT IN FLATBUSH AVE WITH COMBINED SEWER

CET 330E-b.1 SUPPORT & PROTECT ELEC, GAS & STEAM FAC. DURING EXCAVATION OF CITY TRENCH WHEN FAC. LIE W/IN TRENCH LIMITS W/ SHEETING (TYPE .1) — LF

At the following locations:

F/O#186 St. Johns Pl. (Sht-10)
F/O#186 St. Johns Pl. (Sht-10)
W Int. of 8th Ave. and St. Johns Pl. (Sht-12)
E Int. Douglass St. and 4th Ave. (Sht-14)
E Int. 4th Ave. and Douglass St. (Sht-14)

Total Quantity for CET 330E-b.1 = 49

CET 330E-B.2 SUPPORT & PROTECT ELEC, GAS & STEAM FAC. DURING EXCAVATION OF CITY TRENCH WHEN FAC. LIE W/IN TRENCH LIMITS W/ SHEETING (TYPE .2) — LF

At the following locations:

N/W/C 5th Ave. and Douglass St. (Sht-6)
N/W/C 6th Ave. and Park Pl. (Sht-8)
S/S Sterling Pl., 40' W/W/C Flatbuch Ave. (Sht-13)
S/S Sterling Pl., 35' W/W/C Flatbuch Ave. (Sht-13)

Total Quantity for CET 330E-B.2 = 34

CET 400 TEST PITS FOR UTILITY FACILITIES — CY

At the following locations:

S/W/C Bergen St. and Flatbush Ave. (Sht-18)
Various

Total Quantity for CET 400 = 41

CON EDISON SCOPE OF WORK
SUPPORT AND PROTECTION
BED-798
72" WATER MAIN REPLACEMENT IN FLATBUSH AVE WITH COMBINED SEWER

CET 401 **TRENCH EXCAVATION FOR ADJUSTMENT OF UTILITIES** **CY**

At the following locations:

S/E/C 6th Ave. and St. Johns Pl. (Sht-8)
F/O#193 6th Ave. (Sht-9)
S/S Berkeley Pl., 20' E/E/C 6th Ave. (Sht-9)
W/S Flatbush Ave., 35' S/S/C Sterling Pl. (Sht-13)
S/S of Douglass St., 20' E/E/C 4th Ave. (Sht-14)
W/S St. Marks Ave. Bet. 6th Ave. to Flatbush Ave. (Sht-18)
S/S Prospect Pl., 90' E/E/C Flatbush Ave. (Sht-18_2)
F/O#3 8th Ave. (Sht-18_3)
E/S 6th Ave. 22' N/N/C Union St. (Sht-9)
W Int. St. Johns Pl.& 7th Ave. (Sht-10)

AS ENCOUNTERED AND DIRECTED BY A CON EDISON REPRESENTATIVE

Total Quantity for CET 401 = 141

CET 402.1 **EXISTING OCCUPIED CONCRETE ENCASED CONDUITS PLACED IN FINAL POSITION W/O CONCRETE ENCASEMENT** **LF**

At the following locations:

S/E/C 6th Ave. and St. Johns Pl. (Sht-8)
W/S Flatbush Ave., 35' S/S/C Sterling Pl. (Sht-13)
S/S of Douglass St., 20' E/E/C 4th Ave. (Sht-14)
W/S St. Marks Ave. Bet. 6th Ave. to Flatbush Ave. (Sht-18)
S/S Prospect Pl., 90' E/E/C Flatbush Ave. (Sht-18_2)
F/O#3 8th Ave. (Sht-18_3)
E/S 6th Ave. 22' N/N/C Union St. (Sht-9)
W Int. St. Johns Pl.& 7th Ave. (Sht-10)

AS ENCOUNTERED AND DIRECTED BY A CON EDISON REPRESENTATIVE

Total Quantity for CET 402.1 = 1,640

CET 402.2 **EXISTING OCCUPIED NON-CONCRETE ENCASED CONDUITS PLACED IN FINAL POSITION W/O CONCRETE ENCASEMENT** **LF**

At the following locations:

F/O#193 6th Ave. (Sht-9)
F/O#193 6th Ave. (Sht-9)

AS ENCOUNTERED AND DIRECTED BY A CON EDISON REPRESENTATIVE

Total Quantity for CET 402.2 = 160

CON EDISON SCOPE OF WORK
SUPPORT AND PROTECTION
BED-798
72" WATER MAIN REPLACEMENT IN FLATBUSH AVE WITH COMBINED SEWER

CET 450.1	**CONSTRUCTION FIELD SUPPORT REQUIRING AVERAGE SIZE SURVEY CREW PERFORMING TYPICAL SURVEY FUNCTIONS (TYPE .1)**	**CRHRS**

At the following locations:

Various

Total Quantity for CET 450.1 = 1

CON EDISON SCOPE OF WORK
SUPPORT AND PROTECTION
BED-798
72" WATER MAIN REPLACEMENT IN FLATBUSH AVE WITH COMBINED SEWER

CET 500	**REMOVAL OF ABANDONED UTILITY CONDUITS (NON-CONCRETE ENCASED)**	**LF**

At the following locations:

W/S Int. of 5th Ave. and Douglass St. (Sht-6)
F/O#20 St. Johns Pl. (Sht-6)
F/O#22 St. Johns Pl. (Sht-6)
F/O#21 St. Johns Pl. (Sht-6)
F/O#68 St. Johns Pl. (Sht-6)
W/S of 6th Ave. Bet. F/O#156 to F/O#148 (Sht-8)
S Int. 6th Ave. and Sterling Pl. (Sht-8)
E Int. 6th Ave. and Sterling Pl. (Sht-8)
N/S Park Pl., 40' W/W/C 6th Ave. (Sht-8)
E Int. Park Pl. and 6th Ave. (Sht-8)
W/S of 6th Ave. Bet. F/O#200 to F/O#194 (Sht-9)
F/O#194 6th Ave. (Sht-9)
W/S of 6th Ave. Bet. F/O#194 to F/O#188a (Sht-9)
W/S 6th Ave. Bet. Berkeley Pl. to Lincoln Pl. (Sht-9)
E/S of 6th Ave. Bet. F/O#183 to F/O#175 (Sht-9)
S/E/C 6th Ave. and Lincoln Pl. (Sht-9)
W of 6th Ave., S of Lincoln Pl. (Sht-9)
Int. of 6th Ave. and Lincoln Pl. (Sht-9)
S/W/C 6th Ave. and Lincoln Pl. (Sht-9)
F/O#101 St. Johns Pl. (Sht-10)
F/O#111 St. Johns Pl. (Sht-10)
F/O#123 St. Johns Pl. (Sht-10)
F/O#123 St. Johns Pl. (Sht-10)
F/O#187 St. Johns Pl. (Sht-10)
F/O#204 St. Johns Pl. (Sht-10)
F/O#214 St. Johns Pl. (Sht-10)
F/O#228 St. Johns Pl. (Sht-10)
F/O#236 St. Johns Pl. (Sht-10)
F/O#634 Baltic St. (Sht-15)
Int. of Baltic St. and Gregory Pl. (Sht-15)
F/O#664 Baltic St. (Sht-15)
F/O#661 Baltic St. (Sht-15)
On Baltic St., Bet. Gregory Pl. to 5th Ave. (Sht-15)
Opp#669 Baltic St. (Sht-15)
On Baltic St., Bet. Gregory Pl. to 5th Ave. (Sht-15)
S/E/C Flatbush Ave. and Prospect Pl. (Sht-18_2)

CON EDISON SCOPE OF WORK
SUPPORT AND PROTECTION
BED-798
72" WATER MAIN REPLACEMENT IN FLATBUSH AVE WITH COMBINED SEWER

AS ENCOUNTERED AND DIRECTED BY A CON EDISON REPRESENTATIVE

Total Quantity for CET 500 = 5,121

CON EDISON SCOPE OF WORK
SUPPORT AND PROTECTION
BED-798
72" WATER MAIN REPLACEMENT IN FLATBUSH AVE WITH COMBINED SEWER

CET 501	**REMOVAL OF ABANDONED MASONRY FOR ELEC. AND TEL. FACILITIES**	**CY**

At the following locations:

F/O#22 St. Johns Pl. (Sht-6)
S/S St. Johns Pl.,Bet. F/O#24 to F/O#38 (Sht-6)
F/O#46 St. Johns Pl. (Sht-6)
F/O#54 St. Johns Pl. (Sht-6)
S/S St. Johns Pl., Bet. F/O#54 to F/O#68 (Sht-6)
F/O#68 St. Johns Pl. (Sht-6)
S/S Park Pl., 20' E/E/C 5th Ave. (Sht-7)
S/S Int. of 6th Ave. and St. Johns Pl. (Sht-8)
W/S 6th Ave., 30' S/S/C St. Johns Pl. (Sht-8)
S/S St. Johns Pl., W/S of 6th Ave. (Sht-8)
S/W/C St. Johns Pl. and 6th Ave. (Sht-8)
S/S St. Johns Pl., E/S of 6th Ave. (Sht-8)
S/E/C 6th Ave. and St. Johns Pl. (Sht-8)
E/S of 6th Ave., 40' S/S/C of St. Johns Pl. (Sht-8)
S/E/C 6th Ave. and St. Johns Pl. (Sht-8)
S/E Int. 6th Ave. and St. Johns Pl. (Sht-8)
E/S Int. 6th Ave. and St. Johns Pl. (Sht-8)
W/S of 6th Ave. Bet. F/O#144 to F/O#136 (Sht-8)
F/O#136 6th Ave. (Sht-8)
W/S 6th Ave., Bet. F/O#134 to F/O#128 (Sht-8)
E/S of 6th Ave. Bet. F/O#141 to F/O#135 (Sht-8)
E Int. 6th Ave. and Sterling Pl. (Sht-8)
N Int. 6th Ave. and Sterling Pl. (Sht-8)
N/E/C 6th Ave. and Sterling Pl. (Sht-8)
E/S 6th Ave. Bet. F/O#133 to F/O#129 (Sht-8)
W/S 6th Ave. Bet. Sterling Pl. to Park Pl. (Sht-8)
N Int. 6th Ave. and Sterling Pl. (Sht-8)
Opp. #125 6th Ave. (Sht-8)
N/W/C 6th Ave. and Park Pl. (Sht-8)
S/E/C 6th Ave. and Park Pl. (Sht-8)
S/S Park Pl., 30' E/E/C 6th Ave. (Sht-8)
W Int. 6th Ave. and Park Pl. (Sht-8)
S/S Park Pl., 20' W/W/C 6th Ave. (Sht-8)
S Int. 6th Ave. and Park Pl. (Sht-8)
F/O#194 6th Ave. (Sht-9)
F/O#194 6th Ave. (Sht-9)
F/O#180 6th Ave. (Sht-9)

CON EDISON SCOPE OF WORK
SUPPORT AND PROTECTION
BED-798
72" WATER MAIN REPLACEMENT IN FLATBUSH AVE WITH COMBINED SEWER

N Int. 6th Ave. and Lincoln Pl. (Sht-9)
F/O#173 6th Ave. (Sht-9)
F/O#164 6th Ave. (Sht-9)
F/O#140 St. Johns Pl. (Sht-10)
F/O#142 St. Johns Pl. (Sht-10)
S/S St. Johns Pl., Bet. F/O#142 to F/O#150 (Sht-10)
F/O#150 St. Johns Pl. (Sht-10)
S/S St. Johns Pl., Bet. F/O#152 to F/O#162 (Sht-10)
F/O#162 St. Johns Pl. (Sht-10)
S/S St. Johns Pl., Bet. F/O#162 to F/O#172 (Sht-10)
F/O#174 St. Johns Pl. (Sht-10)
S/S St. Johns Pl., Bet. F/O#174 to F/O#180 (Sht-9)
F/O#180 St. Johns Pl. (Sht-10)
S/S St. Johns Pl., Bet. F/O#180 to 7th Ave. (Sht-10)
F/O#186 St. Johns Pl. (Sht-10)
W Int. St. Johns Pl.& 7th Ave. (Sht-10)
Int. St. Johns Pl.& 7th Ave. (Sht-10)
Int. St. Johns Pl.& 7th Ave. (Sht-10)
N/E Int. St. Johns Pl.& 7th Ave. (Sht-10)
F/O#181 St. Johns Pl. (Sht-10)
F/O#187 St. Johns Pl. (Sht-10)
F/O#187 St. Johns Pl. (Sht-10)
F/O#194 St. Johns Pl. (Sht-10)
F/O#204 St. Johns Pl. (Sht-10)
On St. Johns Pl.,Bet. 7th Ave. to 8th Ave. (Sht-10)
On St. Johns Pl., bet. 7th Ave. to 8th Ave. (Sht-10)
On St. Johns Pl., Bet. 7th Ave. to 8th Ave. (Sht-10)
F/O#216 St. Johns Pl. (Sht-10)
F/O#221 St. Johns Pl. (Sht-10)
F/O#221 St. Johns Pl. (Sht-10)
F/O#228 St. Johns Pl. (Sht-10)
F/O#228 St. Johns Pl. (Sht-10)
F/O#236 St. Johns Pl. (Sht-10)
On St. Johns Pl., Bet. F/O#221 to 8th Ave. (Sht-10)
On St. Johns Pl., Bet. F/O#221 to 8th Ave. (Sht-10)
F/O#9 8th Ave. (Sht-12)
F/O#5 8th Ave. (Sht-12)
S/E/C 8th Ave. and St. Johns Pl. (Sht-12)
Int. of 8th Ave. and St. Johns Pl. (Sht-12)
Int. of 8th Ave. and St. Johns Pl. (Sht-12)

CON EDISON SCOPE OF WORK
SUPPORT AND PROTECTION
BED-798
72" WATER MAIN REPLACEMENT IN FLATBUSH AVE WITH COMBINED SEWER

N/W/C Flatbush Ave. and 8th Ave. (Sht-13)
N Int. of Flatbush Ave. and 8th Ave. (Sht-13)
F/O#634 Baltic St. (Sht-15)
F/O#664 Baltic St. (Sht-15)
S/S Baltic St., 80' E/E/C Gregory Pl. (Sht-15)
S/W/C Prospect Pl. and Flatbush Ave. (Sht-18_2)
W/S Flatbush Ave., bet. 8th Ave. to St. Johns Pl. (Sht-18_3)
S/E/C St. Johns Pl. and 8th Ave. (Sht-18_3)
AS ENCOUNTERED AND DIRECTED BY A CON EDISON REPRESENTATIVE

Total Quantity for CET 501 = 438

CET 601.1 **INSTALL CONDUIT IN PAVED AREA (1 EA. 2", 4" OR 5" CONDUIT - ALL TYPES)** **LF**

At the following locations:

F/O#32 St. Johns Pl. (Sht-6)
F/O#60 St. Johns Pl. (Sht-6)
S/W/C 6th Ave. and Sterling Pl. (Sht-8)
F/O#194 6th Ave. (Sht-9)
F/O#196 6th Ave. (Sht-9)
S/W/C 6th Ave. and Lincoln Pl. (Sht-9)
F/O#150 St. Johns Pl. (Sht-10)
Opp#186 St. Johns Pl. (Sht-10)
F/O#188 St. Johns Pl. (Sht-10)
F/O#240 St. Johns Pl. (Sht-10)
F/O#632 Baltic St. (Sht-15)
S/E/C Baltic St. and Gregory Pl. (Sht-15)
N/E/C Union St. and 6th Ave. (Sht-9)
S/E/C Flatbush Ave. and Prospect Pl. (Sht-18_2)
N/W/C Park Pl. and Carlton Ave. (Sht-18_2)
S/E/C Carlton Ave. and Park Pl. (Sht-18_2)
S/S Park Pl., Bet. Flatbush Ave. to Carlton Ave. (Sht-18_2)
S/W/C Bergen St. and Flatbush Ave. (Sht-18)
AS ENCOUNTERED AND DIRECTED BY A CON EDISON REPRESENTATIVE

Total Quantity for CET 601.1 = 728

CON EDISON SCOPE OF WORK
SUPPORT AND PROTECTION
BED-798
72" WATER MAIN REPLACEMENT IN FLATBUSH AVE WITH COMBINED SEWER

CET 636 ED SW **ADJUSTMENT OF UTILITY HARDWARE IN SIDEWALK (30" TO UNDER 34" WIDTH)** **EA**

At the following locations:

S/E/C St. Johns Pl. and 8th Ave. (Sht-18_3)
S/W/C 8th Ave. and St. Johns Pl. (Sht-18_3)
AS ENCOUNTERED AND DIRECTED BY A CON EDISON REPRESENTATIVE
Total Quantity for CET 636 ED S = 2

CET 636 EH SW **ADJUSTMENT OF UTILITY HARDWARE IN SIDEWALK (75" TO UNDER 125" WIDTH)** **EA**

At the following locations:

W/S Flatbush Ave. Bet. 7th Ave. to Park Pl. (Sht-18_2)
AS ENCOUNTERED AND DIRECTED BY A CON EDISON REPRESENTATIVE
Total Quantity for CET 636 EH S = 1

CET 636 MD **MOD. OF WORK METHODS TO ACCOMM. UTILITY STREET HARDWARE DURING PAVE MILL. & RESURF. OPS. (30" TO UNDER 34" WIDTH)** **EA**

At the following locations:

N/E/C Park Pl. and Carlton Ave. (Sht-18_2)
AS ENCOUNTERED AND DIRECTED BY A CON EDISON REPRESENTATIVE
Total Quantity for CET 636 MD = 1

CET 636 ME **MOD. OF WORK METHODS TO ACCOMM. UTILITY STREET HARDWARE DURING PAVE MILL. & RESURF. OPS. (34" TO UNDER 41" WIDTH)** **EA**

At the following locations:

On Park Pl., 5' E/E/C Carlton Ave. (Sht-18_2)
AS ENCOUNTERED AND DIRECTED BY A CON EDISON REPRESENTATIVE
Total Quantity for CET 636 ME = 1

CET 636 RM **REBUILDING & MODIFICATIONS OF UTILITY STRUCTURE** **CY**

At the following locations:

W Int. St. Johns Pl.& 7th Ave. (Sht-10)
N/E/C Flatbush Ave. and St. Marks Ave. (Sht-18)
N/W/C Park Pl. and Carlton Ave. (Sht-18_2)
E/S Carlton Ave., Bet. Park Pl. to Flatbush Avet. (Sht-8)
S/W/C Flatbush Ave. and Sterling Pl. (Sht-18_3)
S/S of Douglass St., 20' E/E/C 4th Ave. (Sht-14)
AS ENCOUNTERED AND DIRECTED BY A CON EDISON REPRESENTATIVE
Total Quantity for CET 636 RM = 29

CON EDISON SCOPE OF WORK
SUPPORT AND PROTECTION
BED-798
72" WATER MAIN REPLACEMENT IN FLATBUSH AVE WITH COMBINED SEWER

CET 710.1	**REMOVAL OF ABANDONED UTILITY STEEL/CAST IRON/PLASTIC, UP TO AND INCL. 12" DIAMETER PIPES**	**LF**

At the following locations:

F/O#32 St. Johns Pl. (Sht-6)
F/O#60 St. Johns Pl. (Sht-6)
S/W/C 6th Ave. and Sterling Pl. (Sht-8)
F/O#196 6th Ave. (Sht-9)
F/O#180 6th Ave. (Sht-9)
F/O#101 St. Johns Pl. (Sht-10)
F/O#150 St. Johns Pl. (Sht-10)
F/O#111 St. Johns Pl. (Sht-10)
F/O#123 St. Johns Pl. (Sht-10)
Opp#186 St. Johns Pl. (Sht-10)
F/O#188 St. Johns Pl. (Sht-10)
F/O#240 St. Johns Pl. (Sht-10)
F/O#632 Baltic St. (Sht-15)
S/E/C Baltic St. and Gregory Pl. (Sht-15)
N/E/C 6th Ave. and Union St. (Sht-9)
N/W/C Park Pl. and Carlton Ave. (Sht-18_2)
S/E/C Carlton Ave. and Park Pl. (Sht-18_2)
S/S Park Pl., Bet. Flatbush Ave. to Carlton Ave. (Sht-18_2)

Total Quantity for CET 710.1 = 766

CET 711	**USE SHEETING LINE AS FORM**	**LF**

At the following locations:

S/S Baltic St., 210' E/E/C 4th Ave. (Sht-15)

AS SHOWN ON CONTRACT DRAWINGS AND DIRECTED BY CON EDISON REP

Total Quantity for CET 711 = 14

CET 781	**REMOVABLE CURB SIDEWALK PANEL FOR ACCESS TO UTILITY STRUCTURE OPENINGS**	**EA**

At the following locations:

N/E/C Flatbush Ave. and St. Marks Ave. (Sht-18)
E/S Carlton Ave., Bet. Park Pl. to Flatbush Avet. (Sht-8)
S/W/C Flatbush Ave. and Sterling Pl. (Sht-18_3)

AS ENCOUNTERED AND DIRECTED BY A CON EDISON REPRESENTATIVE

Total Quantity for CET 781 = 3

CON EDISON SCOPE OF WORK
SUPPORT AND PROTECTION
BED-798
72" WATER MAIN REPLACEMENT IN FLATBUSH AVE WITH COMBINED SEWER

CET 802A **SPECIAL MODIFICATION OF WORK FOR INSTALLATION OF NEW SIDEWALKS** **SF**

At the following locations:

S/W/C Flatbush Ave. and Sterling Pl. (Sht-13)
S/W/C Bergen St. and Flatbush Ave. (Sht-18)
S/W/C St. Marks Ave. and 6th Ave. (Sht-18)
W/S Flatbush Ave. Bet. 7th Ave. to Park Pl. (Sht-18_2)
S/E/C St. Johns Pl. and 8th Ave. (Sht-18_3)
N/W St. Johns Pl. and Plaza East St. (Sht-18_3)
S/W/C 8th Ave. and St. Johns Pl. (Sht-18_3)

AS ENCOUNTERED AND DIRECTED BY A CON EDISON REPRESENTATIVE

Total Quantity for CET 802A = 500

CON EDISON SCOPE OF WORK
SUPPORT AND PROTECTION
BED-798
72" WATER MAIN REPLACEMENT IN FLATBUSH AVE WITH COMBINED SEWER

CET 802B **SPECIAL MODIFICATION OF WORK FOR INSTALLATION OF NEW CURBS** **LF**

At the following locations:

S/S Sterling Pl., 70' W/W/C Flatbuch Ave. (Sht-13)
S/W/C Flatbush Ave. and Sterling Pl. (Sht-13)
S/W/C Flatbush Ave. and Bergen St. (Sht-18)
F/O#482 Bergen St. (Sht-18)
W/S Flatbush Ave. Bet. 6th Ave. to St. Marks Ave. (Sht-18)
F/O#75 St. Marks Ave. (Sht-18)
N/S St. Marks Ave., 40' E/E/C Flatbush Ave. (Sht-18)
N/E/C Flatbush Ave. and St. Marks Ave. (Sht-18)
S/W/C St. Marks Ave. and 6th Ave. (Sht-18)
S/S Prospect Pl., 90' E/E/C Flatbush Ave. (Sht-18_2)
S/E/C Prospect Pl. and Flatbush Ave. (Sht-18_2)
W/S Flatbush Ave. Bet. 7th Ave. to Park Pl. (Sht-18_2)
N/W/C Flatbush Ave. and Park Pl. (Sht-18_2)
N/E/C Park Pl. and Carlton Ave. (Sht-18_2)
N/W/C Park Pl. and Carlton Ave. (Sht-18_2)
On Park Pl., 5' E/E/C Carlton Ave. (Sht-18_2)
E/S Carlton Ave., Bet. Park Pl. to Flatbush Avet. (Sht-8)
S/E/C Flatbush Ave. and Carlton Ave. (Sht-18_2)
S/S Park Pl., Bet. Flatbush Ave. to Carlton Ave. (Sht-18_2)
S/E/C Park Pl. and Flatbush Ave. (Sht-18_2)
S/E/C Carlton Ave. and Flatbush Ave. (Sht-18_2)
E/S of Flatbush Ave. Bet. Park Pl. to Carlton Ave. (Sht-18_2)
S/W/C Flatbush Ave. and Sterling Pl. (Sht-18_3)
S/S Sterling Pl., 110' W/W/C Flatbush Ave. (Sht-18_3)
S/E/C St. Johns Pl. and 8th Ave. (Sht-18_3)
S/W/C Flatbush Ave. and St. Johns Pl. (Sht-18_2)
N/W St. Johns Pl. and Plaza East St. (Sht-18_3)
S/W/C St. Johns Pl. and 8th Ave. (Sht-18_3)

AS ENCOUNTERED AND DIRECTED BY A CON EDISON REPRESENTATIVE

Total Quantity for CET 802B = 409

CET 803.2 **LINE CUT BY PNEUMATIC TOOLS IN LIEU OF SAW CUT ASSOCIATED W/ ROADWAY REMOVAL (ASPHALT & CONCRETE)** **LF**

At the following locations:

S/W/C Bergen St. and Flatbush Ave. (Sht-18)

Total Quantity for CET 803.2 = 40

UTILITY INTERFERENCES (UI) SECTION WORKSHEET

BED798 - REPLACEMENT OF TRUNK WATER MAIN IN FLATBUSH AVE.

FOR INFORMATION ONLY

ENGINEER'S ESTIMATE OF QUANTITY AND TYPES OF INTERFERENCE

FOR VERIZON

BOROUGH OF BROOKLYN

CET ITEM NUMBER	DESCRIPTION	Unit of Measure	Estimated Quantity
CET 100.1	UTILITIES CROSSING TRENCH FOR CATCH BASIN CHUTE CONNECT. AND/OR TEST PIT (TYPE .1)	EA.	37.00
CET 100.3	UTILITIES CROSSING TRENCH FOR CATCH BASIN CHUTE CONNECT. AND/OR TEST PIT (TYPE .3)	EA.	3.00
CET 101.1	UTILITIES CROSSING TRENCH FOR SEWERS OVER 12" TO 24" DIAMETER (TYPE .1)	EA.	7.00
CET 101.2	UTILITIES CROSSING TRENCH FOR SEWERS OVER 12" TO 24" DIAMETER (TYPE .2)	EA.	1.00
CET 101.3	UTILITIES CROSSING TRENCH FOR SEWERS OVER 12" TO 24" DIAMETER (TYPE .3)	EA.	1.00
CET 102.1	UTILITIES CROSSING TRENCH FOR SEWERS OVER 24" TO 36" DIAMETER (TYPE .1)	EA.	5.00
CET 104.1	UTILITIES CROSSING TRENCH FOR SEWERS OVER 48" TO 54" DIAMETER (TYPE .1)	EA.	10.00
CET 108.1	UTILITIES CROSSING TRENCH FOR WATERMAIN UP TO AND INCL. 12" DIAMETER (TYPE .1)	EA.	19.00
CET 108.2	UTILITIES CROSSING TRENCH FOR WATERMAIN UP TO AND INCL. 12" DIAMETER (TYPE .2)	EA.	5.00
CET 109.1	UTILITIES CROSSING TRENCH FOR WATERMAIN OVER 12" AND UP TO 24" DIAMETER (TYPE .1)	EA.	21.00
CET 109.2	UTILITIES CROSSING TRENCH FOR WATERMAIN OVER 12" AND UP TO 24" DIAMETER (TYPE .2)	EA.	1.00
CET 111.1	UTILITIES CROSSING TRENCH FOR WATERMAIN OVER 36" AND UP TO 48" DIAMETER (TYPE .1)	EA.	1.00
CET 114.1	UTILITIES CROSSING TRENCH FOR WATERMAIN OVER 60" AND UP TO 72" DIAMETER (TYPE .1)	EA.	20.00
CET 114.2	UTILITIES CROSSING TRENCH FOR WATERMAIN OVER 60" AND UP TO 72" DIAMETER (TYPE .2)	EA.	2.00
CET 114.3	UTILITIES CROSSING TRENCH FOR WATERMAIN OVER 60" AND UP TO 72" DIAMETER (TYPE .3)	EA.	1.00
CET 200.1	EXTRA DEPTH EXCAVATION OF CATCH BASIN CHUTE CONNECTION PIPES	L.F.	172.00
CET 225.1A	REMOVAL AND INSTALLATION OF CATCH BASINS WITH UTILITY INTERFERENCES	EA.	1.00
CET 225.1B	INSTALLATION OF CATCH BASINS WITH UTILITY INTERFERENCES	EA.	6.00
CET 330T	SUPPORT & PROTECTION OF COMMUNICATION UTILITY FACILITIES DURING EXCAVATION OF CITY TRENCH WHEN FACILITIES LIE IN OR	L.F.	3,990.00
CET 400	TEST PITS	C.Y.	20.00
CET 401	TRENCH EXCAVATION FOR ADJUSTMENT OF UTILITIES	C.Y.	1,434.60
CET 402T.2A	EXIST. OCCUPIED NON-CONCR. ENCASED CONDUITS PLCD. IN FINAL POS. WITH CONCR. ENCSMNT.	L.F.	12,812.80

UTILITY INTERFERENCES (UI) SECTION WORKSHEET

BED798 - REPLACEMENT OF TRUNK WATER MAIN IN FLATBUSH AVE.

FOR INFORMATION ONLY

ENGINEER'S ESTIMATE OF QUANTITY AND TYPES OF INTERFERENCE

FOR VERIZON

BOROUGH OF BROOKLYN

CET ITEM NUMBER	DESCRIPTION	Unit of Measure	Estimated Quantity
CET 402T.V2A	EXIST. VACANT NON-CONCR. ENCASED CONDUITS PLCD. IN FINAL POS. WITH CONCR. ENCSMNT.	L.F.	3,203.00
CET 500	REMOVAL OF ABANDONED UTILITY CONDUITS (NON-CONCRETE ENCASED)	L.F.	14,228.00
CET 501.0	REMOVAL OF ABANDONED MASONRY FOR ELECTRIC AND TEL. FACILITIES	C.Y.	12.00
CET 638 N	INSTALLATION OF FIELD CONSTRUCTED UTILITY STRUCTURE	C.Y.	76.00
CET 638 R	BREAK OUT AND REMOVE UTILITY STRUCTURE	C.Y.	76.00
CET 711	USE SHEETING LINE AS FORM	L.F.	60.00

VERIZON CET SCOPE OF WORK
SUPPORT & PROTECTION
BED798 - REPLACEMENT OF TRUNK
WATER MAIN IN FLATBUSH AVE.
BOROUGH OF BROOKLYN

CET 100.1	**UTILITIES CROSSING TRENCH FOR CATCH BASIN CHUTE CONNECT. AND/OR TEST PIT (TYPE .1)**	**EA.**
	At the following locations:	
	MID. OF 6TH AVENUE S/O PARK PLACE	3.00
	S/S PARK PLACE E/O 6TH AVENUE	1.00
	E/S 6TH AVENUE N/O STERLING PLACE	1.00
	E/S 6TH AVENUE N/O ST. JOHNS PLACE	3.00
	E/S 6TH AVENUE N/O ST. JOHNS PLACE (SIDEWALK)	1.00
	E/S 6TH AVENUE S/O ST. JOHNS PLACE	3.00
	E/S 6TH AVENUE S/O LINCOLN PLACE	2.00
	E/S 6TH AVENUE N/O LINCOLN PLACE	3.00
	E/S 6TH AVENUE S/O BERKELEY PLACE	3.00
	E/S 6TH AVENUE N/O BERKELEY PLACE	2.00
	E/S 6TH AVENUE N/O UNION STREET	2.00
	MID. OF UNION STREET E/O 6TH AVENUE	3.00
	E/S 7TH AVENUE N/O ST. JOHNS PLACE	3.00
	E/S 7TH AVENUE S/O ST. JOHNS PLACE	3.00
	W/S 8TH AVENUE N/O LINCOLN PLACE	3.00
	S/S STERLING PLACE E/O FLATBUSH AVENUE	1.00
	Total quantity for CET 100.1 = 37.00	
CET 100.3	**UTILITIES CROSSING TRENCH FOR CATCH BASIN CHUTE CONNECT. AND/OR TEST PIT (TYPE .3)**	**EA.**
	At the following locations:	
	E/S 6TH AVENUE N/O STERLING PLACE	1.00
	E/S 6TH AVENUE N/O ST. JOHNS PLACE (SIDEWALK)	1.00
	E/S 6TH AVENUE S/O ST. JOHNS PLACE (SIDEWALK)	1.00
	Total quantity for CET 100.3 = 3.00	
CET 101.1	**UTILITIES CROSSING TRENCH FOR SEWERS OVER 12" TO 24" DIAMETER (TYPE .1)**	**EA.**
	At the following locations:	
	INT. OF BALTIC STREET AND 5TH AVENUE	1.00
	INT. OF STERLING PLACE AND 6TH AVENUE	3.00
	MID. OF STERLING PLACE E/O 6TH AVENUE	1.00
	INT. OF ST. JOHNS PLACE AND 8TH AVENUE	2.00
	Total quantity for CET 101.1 = 7.00	
CET 101.2	**UTILITIES CROSSING TRENCH FOR SEWERS OVER 12" TO 24" DIAMETER (TYPE .2)**	**EA.**
	At the following locations:	
	INT. OF BALTIC STREET AND 5TH AVENUE	1.00
	Total quantity for CET 101.2 = 1.00	
CET 101.3	**UTILITIES CROSSING TRENCH FOR SEWERS OVER 12" TO 24" DIAMETER (TYPE .3)**	**EA.**
	At the following locations:	
	MID. OF STERLING PLACE E/O 6TH AVENUE	1.00
	Total quantity for CET 101.3 = 1.00	

VERIZON CET SCOPE OF WORK
SUPPORT & PROTECTION
BED798 - REPLACEMENT OF TRUNK
WATER MAIN IN FLATBUSH AVE.
BOROUGH OF BROOKLYN

CET 102.1	**UTILITIES CROSSING TRENCH FOR SEWERS OVER 24" TO 36" DIAMETER (TYPE .1)**	**EA.**
	At the following locations:	
	INT. OF ST. JOHNS PLACE AND 6TH AVENUE	4.00
	MID. OF ST. JOHNS PLACE E/O 6TH AVENUE	1.00
	Total quantity for CET 102.1 = 5.00	
CET 104.1	**UTILITIES CROSSING TRENCH FOR SEWERS OVER 48" TO 54" DIAMETER (TYPE .1)**	**EA.**
	At the following locations:	
	INT. OF ST. JOHNS PLACE AND 6TH AVENUE	3.00
	MID. OF 6TH AVENUE S/O PARK PLACE	3.00
	MID. OF PARK PLACE E/O 6TH AVENUE	1.00
	INT. OF LINCOLN PLACE AND 6TH AVENUE	3.00
	Total quantity for CET 104.1 = 10.00	
CET 108.1	**UTILITIES CROSSING TRENCH FOR WATERMAIN UP TO AND INCL. 12" DIAMETER (TYPE .1)**	**EA.**
	At the following locations:	
	INT. OF ST. JOHNS PLACE AND 6TH AVENUE	4.00
	INT. OF BALTIC STREET AND 5TH AVENUE	1.00
	INT. OF STERLING PLACE AND 6TH AVENUE	3.00
	INT. OF LINCOLN PLACE AND 6TH AVENUE	3.00
	INT. OF BERKELEY PLACE AND 6TH AVENUE	2.00
	E/S 8TH AVENUE N/O LINCOLN PLACE	2.00
	INT. OF ST. JOHNS PLACE AND 8TH AVENUE	1.00
	W/S 8TH AVENUE S/O ST. JOHNS PLACE	1.00
	INT. OF FLATBUSH AVENUE AND STERLING PLACE	1.00
	N/S 8TH AVENUE W/O FLATBUSH AVENUE	1.00
	Total quantity for CET 108.1 = 19.00	
CET 108.2	**UTILITIES CROSSING TRENCH FOR WATERMAIN UP TO AND INCL. 12" DIAMETER (TYPE .2)**	**EA.**
	At the following locations:	
	INT. OF BALTIC STREET AND 5TH AVENUE	1.00
	N/S ST. JOHNS PLACE E/O 6TH AVENUE	1.00
	E/S FLATBUSH AVENUE N/O STERLING PLACE	1.00
	INT. OF FLATBUSH AVENUE AND STERLING PLACE	2.00
	Total quantity for CET 108.2 = 5.00	

VERIZON CET SCOPE OF WORK
SUPPORT & PROTECTION
BED798 - REPLACEMENT OF TRUNK
WATER MAIN IN FLATBUSH AVE.
BOROUGH OF BROOKLYN

CET 109.1	**UTILITIES CROSSING TRENCH FOR WATERMAIN OVER 12" AND UP TO 24" DIAMETER (TYPE .1)**	**EA.**
	At the following locations:	
	INT. OF ST. JOHNS PLACE AND 6TH AVENUE	1.00
	S/S PARK PLACE W/O 6TH AVENUE	1.00
	INT. OF PARK PLACE AND 6TH AVENUE	3.00
	E/S 6TH AVENUE N/O STERLING PLACE	1.00
	W/S 8TH AVENUE N/O LINCOLN PLACE	3.00
	INT. OF ST. JOHNS PLACE AND 8TH AVENUE	4.00
	E/S FLATBUSH AVENUE N/O STERLING PLACE	1.00
	INT. OF FLATBUSH AVENUE AND STERLING PLACE	2.00
	W/S FLATBUSH AVENUE S/O STERLING PLACE	2.00
	INT. OF FLATBUSH AVENUE AND 8TH AVENUE	1.00
	INT. OF FLATBUSH AVENUE AND 8TH AVENUE	2.00
	Total quantity for CET 109.1 = 21.00	
CET 109.2	**UTILITIES CROSSING TRENCH FOR WATERMAIN OVER 12" AND UP TO 24" DIAMETER (TYPE .2)**	**EA.**
	At the following locations:	
	E/S FLATBUSH AVENUE N/O STERLING PLACE	1.00
	Total quantity for CET 109.2 = 1.00	
CET 111.1	**UTILITIES CROSSING TRENCH FOR WATERMAIN OVER 36" AND UP TO 48" DIAMETER (TYPE .1)**	**EA.**
	At the following locations:	
	INT. OF ST. JOHNS PLACE AND 8TH AVENUE	1.00
	Total quantity for CET 111.1 = 1.00	
CET 114.1	**UTILITIES CROSSING TRENCH FOR WATERMAIN OVER 60" AND UP TO 72" DIAMETER (TYPE .1)**	**EA.**
	At the following locations:	
	INT. OF ST. JOHNS PLACE AND 6TH AVENUE	3.00
	S/S PARK PLACE W/O 6TH AVENUE	1.00
	INT. OF LINCOLN PLACE AND 6TH AVENUE	3.00
	W/S 6TH AVENUE N/O UNION STREET	1.00
	INT. OF ST. JOHNS PLACE AND 7TH AVENUE	3.00
	E/S 8TH AVENUE N/O LINCOLN PLACE	2.00
	INT. OF ST. JOHNS PLACE AND 8TH AVENUE	2.00
	E/S FLATBUSH AVENUE S/O STERLING PLACE	1.00
	INT. OF FLATBUSH AVENUE AND STERLING PLACE	1.00
	INT. OF FLATBUSH AVENUE AND 8TH AVENUE	3.00
	Total quantity for CET 114.1 = 20.00	
CET 114.2	**UTILITIES CROSSING TRENCH FOR WATERMAIN OVER 60" AND UP TO 72" DIAMETER (TYPE .2)**	**EA.**
	At the following locations:	
	S/S ST. JOHNS PLACE E/O 6TH AVENUE	1.00
	E/S FLATBUSH AVENUE S/O STERLING PLACE	1.00
	Total quantity for CET 114.2 = 2.00	

VERIZON CET SCOPE OF WORK
SUPPORT & PROTECTION
BED798 - REPLACEMENT OF TRUNK
WATER MAIN IN FLATBUSH AVE.
BOROUGH OF BROOKLYN

CET 114.3	**UTILITIES CROSSING TRENCH FOR WATERMAIN OVER 60" AND UP TO 72" DIAMETER (TYPE .3)**	**EA.**
	At the following locations:	
	INT. OF FLATBUSH AVENUE AND STERLING PLACE	1.00
	Total quantity for CET 114.3 = 1.00	
CET 200.1	**EXTRA DEPTH EXCAVATION OF CATCH BASIN CHUTE CONNECTION PIPES**	**L.F.**
	At the following locations:	
	S/S PARK PLACE E/O 6TH AVENUE	7.00
	E/S 6TH AVENUE N/O ST. JOHNS PLACE	8.00
	E/S 6TH AVENUE S/O ST. JOHNS PLACE	7.00
	E/S 6TH AVENUE S/O LINCOLN PLACE	8.00
	E/S 6TH AVENUE N/O LINCOLN PLACE	20.00
	E/S 6TH AVENUE S/O BERKELEY PLACE	8.00
	E/S 6TH AVENUE N/O BERKELEY PLACE	22.00
	E/S 6TH AVENUE N/O UNION STREET	7.00
	MID. OF UNION STREET E/O 6TH AVENUE	13.00
	E/S 7TH AVENUE N/O ST. JOHNS PLACE	19.00
	E/S 7TH AVENUE S/O ST. JOHNS PLACE	15.00
	W/S 8TH AVENUE N/O LINCOLN PLACE	7.00
	S/S STERLING PLACE E/O FLATBUSH AVENUE	31.00
	Total quantity for CET 200.1 = 172.00	
CET 225.1A	**REMOVAL AND INSTALLATION OF CATCH BASINS WITH UTILITY INTERFERENCES**	**EA.**
	At the following locations:	
	S/S STERLING PLACE E/O FLATBUSH AVENUE	1.00
	Total quantity for CET 225.1A = 1.00	
CET 225.1B	**INSTALLATION OF CATCH BASINS WITH UTILITY INTERFERENCES**	**EA.**
	At the following locations:	
	E/S 6TH AVENUE N/O STERLING PLACE	1.00
	E/S 6TH AVENUE S/O LINCOLN PLACE	1.00
	E/S 6TH AVENUE S/O BERKELEY PLACE	1.00
	E/S 6TH AVENUE N/O BERKELEY PLACE	1.00
	E/S 6TH AVENUE N/O UNION STREET	1.00
	W/S 8TH AVENUE N/O LINCOLN PLACE	1.00
	Total quantity for CET 225.1B = 6.00	
CET 330T	**SUPPORT & PROTECTION OF COMMUNICATION UTILITY FACILITIES DURING EXCAVATION OF CITY TRENCH WHEN FACILITIES LIE IN OR CLOSE PROXIMITY TO TRENCH LIMITS**	**L.F.**
	At the following locations:	
	INT. OF BALTIC STREET AND 5TH AVENUE	15.00
	INT. OF ST. JOHNS PLACE AND 6TH AVENUE	120.00
	INT. OF STERLING PLACE AND 6TH AVENUE	40.00
	INT. OF LINCOLN PLACE AND 6TH AVENUE	15.00
	E/S 7TH AVENUE N/O & S/O ST. JOHNS PLACE	600.00
	E/S FLATBUSH AVENUE S/O STERLING PLACE	3200.00
	Total quantity for CET 330T = 3990.00	

VERIZON CET SCOPE OF WORK
SUPPORT & PROTECTION
BED798 - REPLACEMENT OF TRUNK
WATER MAIN IN FLATBUSH AVE.
BOROUGH OF BROOKLYN

CET 400	**TEST PITS**	**C.Y.**
	At the following locations:	
	AS ENCOUNTERED OR DIRECTED BY VERIZON FIELD REPRESENTATIVE	20.00
	Total quantity for CET 400 = 20.00	
CET 401	**TRENCH EXCAVATION FOR ADJUSTMENT OF UTILITIES**	**C.Y.**
	At the following locations:	
	S/S ST. JOHNS PLACE W/O 6TH AVENUE	97.00
	S/S PARK PLACE W/O 6TH AVENUE	67.00
	MID. OF PARK PLACE E/O 6TH AVENUE	17.00
	E/S 6TH AVENUE BTWN. ST. JOHNS PLACE AND N/O STERLING PLACE	208.00
	MID. OF ST. JOHNS PLACE E/O 6TH AVENUE	33.00
	E/S 6TH AVENUE BTWN. LINCOLN PLACE AND ST. JOHNS PLACE	100.00
	E/S 6TH AVENUE BTWN. UNION STREET AND LINCOLN PLACE	347.00
	MID. OF 6TH AVENUE N/O UNION STREET	19.00
	E/S 7TH AVENUE N/O ST. JOHNS PLACE	5.60
	E/S 7TH AVENUE S/O ST. JOHNS PLACE	13.00
	MID. OF ST. JOHNS PLACE W/O 8TH AVENUE	50.00
	E/S 8TH AVENUE N/O LINCOLN PLACE	16.00
	W/S 8TH AVENUE BTWN. LINCOLN PLACE AND ST. JOHNS PLACE	272.00
	INT. OF ST. JOHNS PLACE AND 8TH AVENUE	7.00
	N/S ST. JOHNS PLACE W/O 8TH AVENUE	25.00
	E/S FLATBUSH AVENUE N/O STERLING PLACE	5.00
	INT. OF FLATBUSH AVENUE AND STERLING PLACE	115.00
	E/S FLATBUSH AVENUE S/O STERLING PLACE	5.00
	N/S 8TH AVENUE W/O FLATBUSH AVENUE	33.00
	Total quantity for CET 401 = 1434.60	
CET 402T.2A	**EXIST. OCCUPIED NON-CONCR. ENCASED CONDUITS PLCD. IN FINAL POS. WITH CONCR. ENCSMNT.**	**L.F.**
	At the following locations:	
	S/S ST. JOHNS PLACE W/O 6TH AVENUE	344.00
	S/S PARK PLACE W/O 6TH AVENUE	192.00
	MID. OF PARK PLACE E/O 6TH AVENUE	96.00
	E/S 6TH AVENUE BTWN. ST. JOHNS PLACE AND N/O STERLING PLACE	1680.00
	MID. OF ST. JOHNS PLACE E/O 6TH AVENUE	80.00
	E/S 6TH AVENUE BTWN. LINCOLN PLACE AND ST. JOHNS PLACE	1420.80
	E/S 6TH AVENUE BTWN. UNION STREET AND LINCOLN PLACE	2787.20
	MID. OF 6TH AVENUE N/O UNION STREET	44.00
	E/S 7TH AVENUE N/O ST. JOHNS PLACE	80.00
	E/S 7TH AVENUE S/O ST. JOHNS PLACE	140.00
	MID. OF ST. JOHNS PLACE W/O 8TH AVENUE	120.00
	E/S 8TH AVENUE N/O LINCOLN PLACE	84.00
	W/S 8TH AVENUE BTWN. LINCOLN PLACE AND ST. JOHNS PLACE	3048.00
	INT. OF ST. JOHNS PLACE AND 8TH AVENUE	32.00
	N/S ST. JOHNS PLACE W/O 8TH AVENUE	120.00
	E/S FLATBUSH AVENUE N/O STERLING PLACE	120.00
	INT. OF FLATBUSH AVENUE AND STERLING PLACE	1496.00
	E/S FLATBUSH AVENUE S/O STERLING PLACE	128.00
	N/S 8TH AVENUE W/O FLATBUSH AVENUE	800.00
	Total quantity for CET 402T.2A = 12812.80	

VERIZON CET SCOPE OF WORK
SUPPORT & PROTECTION
BED798 - REPLACEMENT OF TRUNK
WATER MAIN IN FLATBUSH AVE.
BOROUGH OF BROOKLYN

CET 402T.V2A	**EXIST. VACANT NON-CONCR. ENCASED CONDUITS PLCD. IN FINAL POS. WITH CONCR. ENCSMNT.**	**L.F.**
	At the following locations:	
	S/S ST. JOHNS PLACE W/O 6TH AVENUE	86.00
	S/S PARK PLACE W/O 6TH AVENUE	48.00
	MID. OF PARK PLACE E/O 6TH AVENUE	24.00
	E/S 6TH AVENUE BTWN. ST. JOHNS PLACE AND N/O STERLING PLACE	420.00
	MID. OF ST. JOHNS PLACE E/O 6TH AVENUE	20.00
	E/S 6TH AVENUE BTWN. LINCOLN PLACE AND ST. JOHNS PLACE	355.20
	E/S 6TH AVENUE BTWN. UNION STREET AND LINCOLN PLACE	696.80
	MID. OF 6TH AVENUE N/O UNION STREET	11.00
	E/S 7TH AVENUE N/O ST. JOHNS PLACE	20.00
	E/S 7TH AVENUE S/O ST. JOHNS PLACE	35.00
	MID. OF ST. JOHNS PLACE W/O 8TH AVENUE	30.00
	E/S 8TH AVENUE N/O LINCOLN PLACE	21.00
	W/S 8TH AVENUE BTWN. LINCOLN PLACE AND ST. JOHNS PLACE	762.00
	INT. OF ST. JOHNS PLACE AND 8TH AVENUE	8.00
	N/S ST. JOHNS PLACE W/O 8TH AVENUE	30.00
	E/S FLATBUSH AVENUE N/O STERLING PLACE	30.00
	INT. OF FLATBUSH AVENUE AND STERLING PLACE	374.00
	E/S FLATBUSH AVENUE S/O STERLING PLACE	32.00
	N/S 8TH AVENUE W/O FLATBUSH AVENUE	200.00
	Total quantity for CET 402T.V2A = 3203.00	
CET 500	**REMOVAL OF ABANDONED UTILITY CONDUITS (NON-CONCRETE ENCASED)**	**L.F.**
	At the following locations:	
	INT. OF 5TH AVENUE AND ST. JOHNS PLACE	105.00
	N/S ST. JOHNS PLACE E/O 5TH AVENUE	80.00
	S/S ST. JOHNS PLACE W/O 6TH AVENUE	1542.00
	INT. OF 5TH AVENUE AND PARK PLACE	20.00
	S/S PARK PLACE W/O 6TH AVENUE	140.00
	E/S 6TH AVENUE BTWN. ST. JOHNS PLACE AND STERLING PLACE	3054.00
	MID. OF ST. JOHNS PLACE E/O 6TH AVENUE	272.00
	S/S ST. JOHNS PLACE E/O 6TH AVENUE	253.00
	E/S 6TH AVENUE BTWN. LINCOLN PLACE AND ST. JOHNS PLACE	1866.00
	MID. OF ST. JOHNS PLACE E/O 6TH AVENUE	50.00
	INT. OF LINCOLN PLACE AND 6TH AVENUE	25.00
	E/S 6TH AVENUE BTWN. UNION STREET AND LINCOLN PLACE	3994.00
	MID. OF 6TH AVENUE N/O UNION STREET	105.00
	S/S ST. JOHNS PLACE W/O 7TH AVENUE (SIDEWALK)	5.00
	S/S ST. JOHNS PLACE W/O 7TH AVENUE	355.00
	E/S 7TH AVENUE S/O ST. JOHNS PLACE	882.00
	MID. OF ST. JOHNS PLACE W/O 8TH AVENUE	638.00
	MID. OF ST. JOHNS PLACE E/O 8TH AVENUE	420.00
	N/S ST. JOHNS PLACE W/O 8TH AVENUE	191.00
	E/S FLATBUSH AVENUE N/O STERLING PLACE	136.00
	W/S FLATBUSH AVENUE S/O STERLING PLACE	95.00
	Total quantity for CET 500 = 14228.00	
CET 501.0	**REMOVAL OF ABANDONED MASONRY FOR ELECTRIC AND TEL. FACILITIES**	**C.Y.**
	At the following locations:	
	INT. OF 5TH AVENUE AND ST. JOHNS PLACE	5.80
	INT. OF 5TH AVENUE AND PARK PLACE	4.30
	S/S ST. JOHNS PLACE W/O 7TH AVENUE	1.60
	Total quantity for CET 501.0 = 12.00	

VERIZON CET SCOPE OF WORK
SUPPORT & PROTECTION
BED798 - REPLACEMENT OF TRUNK
WATER MAIN IN FLATBUSH AVE.
BOROUGH OF BROOKLYN

CET 638 N	**INSTALLATION OF FIELD CONSTRUCTED UTILITY STRUCTURE**	**C.Y.**
	At the following locations:	
	INT. OF STERLING PLACE AND 6TH AVENUE	4.40
	E/S 6TH AVENUE N/O STERLING PLACE	37.10
	INT. OF ST. JOHNS PLACE AND 6TH AVENUE	8.80
	INT. OF BERKELEY PLACE AND 6TH AVENUE	5.00
	INT. OF UNION STREET AND 6TH AVENUE	7.10
	INT. OF ST. JOHNS PLACE AND 7TH AVENUE	7.10
	INT. OF ST. JOHNS PLACE AND 8TH AVENUE	6.00
	Total quantity for CET 638 N = 76.00	
CET 638 R	**BREAK OUT AND REMOVE UTILITY STRUCTURE**	**C.Y.**
	At the following locations:	
	INT. OF STERLING PLACE AND 6TH AVENUE	4.40
	E/S 6TH AVENUE N/O STERLING PLACE	37.10
	INT. OF ST. JOHNS PLACE AND 6TH AVENUE	8.80
	INT. OF BERKELEY PLACE AND 6TH AVENUE	5.00
	INT. OF UNION STREET AND 6TH AVENUE	7.10
	INT. OF ST. JOHNS PLACE AND 7TH AVENUE	7.10
	INT. OF ST. JOHNS PLACE AND 8TH AVENUE	6.00
	Total quantity for CET 638 R = 76.00	
CET 711	**USE SHEETING LINE AS FORM**	**L.F.**
	At the following locations:	
	INT. OF LINCOLN PLACE AND 6TH AVENUE	10.00
	E/S FLATBUSH AVENUE N/O STERLING PLACE	10.00
	INT. OF FLATBUSH AVENUE AND STERLING PLACE	40.00
	Total quantity for CET 711 = 60.00	
		EA.

FOR INFORMATION ONLY
ENGINEER'S ESTIMATE OF QUANTITIES AND TYPES OF INTERFERENCE
TIME WARNER CABLE OF NEW YORK CITY
BED-798
WATER MAIN REPLACEMENT AND COMBINED SEWER IN VARIOUS LOCATIONS
BOROUGH OF BROOKLYN

CET ITEM	DESCRIPTION	UNITS	ESTIMATED QUANTITY
100.1	UTILITIES CROSSING TRENCH FOR CB CHUTE CONNECTION	EA	5
101.1	UTILITIES CROSSING TRENCH FOR SEWERS UP TO AND INCLUDING 24" DIAMETER	EA	4
104.1	UTILITIES CROSSING TRENCH FOR SEWERS OVER 48" TO 54" DIAMETER	EA	1
106.1	UTILITIES CROSSING TRENCH FOR SEWERS OVER 60" TO 72" DIAMETER	EA	1
108.1	UTILITIES CROSSING TRENCH FOR WATER MAIN UP TO AND INCLUDING 12" DIAMETER	EA	10
114.1	UTILITIES CROSSING TRENCH FOR WATER MAIN OVER 60" TO 72" DIAMETER	EA	3
330	SUPPORT AND PROTECTION OF UTILITY IN CITY TRENCH	LF	738
500	REMOVAL OF ABANDONED UTILITY CONDUITS (NON-CONCRETE ENCASED)	LF	20

TIME WARNER CABLE
SUPPORT & PROTECTION
BED-798
Water Main Replacement and Combined Sewer in Various Locations
Borough of Brooklyn

CET 100.1	**UTILITIES CROSSING TRENCH FOR CB CHUTE CONNECTION**	**EA**
	At the following locations:	
	Intersection of Park Place and 5th Ave	1
	Intersection of Sterling Place and 6th Ave	1
	Intersection of 6th Ave and Park Place	1
	Intersection of 7th Ave and St. Johns Place	2
	Total quantity for CET 100.1	5
CET 101.1	**UTILITIES CROSSING TRENCH FOR SEWERS UP TO AND INCLUDING 24" DIAMETER**	**EA**
	At the following locations:	
	Intersection of Sterling Place and 6th Ave	1
	Intersection of St. Johns Place and 7th Ave	1
	Intersection of St. Johns Place and 5th Ave	2
	Total quantity for CET 101.1	4
CET 104.1	**UTILITIES CROSSING TRENCH FOR SEWERS OVER 48" TO 54" DIAMETER**	**EA**
	At the following locations:	
	Intersection of Park Place and 6th Ave	1
	Total quantity for CET 104.1	1
CET 106.1	**UTILITIES CROSSING TRENCH FOR SEWERS OVER 60" TO 72" DIAMETER**	**EA**
	At the following locations:	
	Intersection of Sterling Place and 6th Ave	1
	Total quantity for CET 106.1	1
CET 108.1	**UTILITIES CROSSING TRENCH FOR WATER MAIN UP TO AND INCLUDING 12" DIAMETER**	**EA**
	At the following locations:	
	IFO #125/126_ Baltic St	
	Intersection of Baltic St and Gregory Place	1
	Intersection of Baltic St and 5th Ave	1
	Intersection of 6th Ave and Park Place	1
	Intersection of St. Johns Place and 7th Ave	1
	Intersection of St. Johns Place and 5th Ave	1
	IFO # 23/11/09/07_ 8th Ave	1
		4
	Total quantity for CET 108.1	10
CET 114.1	**UTILITIES CROSSING TRENCH FOR WATER MAIN OVER 60" TO 72" DIAMETER**	**EA**
	At the following locations:	
	IFO # 13/14_ Park Place	
	Intersection of Sterling Place and 6th Ave	1
	Intersection of St. Johns Place and 7th Ave	1
		1
	Total quantity for CET 114.1	3

TEST PITS

(1) THESE TEST PITS DETAIL EXISTING CONDITIONS (AS OF BID DATE) OF UTILITIES AND OTHER SUBSURFACE FACILITIES AT LOCATIONS AS SHOWN ON THE TEST PIT LOCATIONS PLAN OF THE CONTRACT DRAWINGS.

(2) DEPTHS OF FACILITIES ARE FROM EXISTING ROADWAY AND SIDEWALK ELEVATIONS AS SHOWN, OFFSETS ARE FROM EXISTING CURB, PROPERTY AND BUILDING LINES, AS SHOWN.

(3) RELEVANT ITEMS ARE NOTED ON EACH TEST PIT DIAGRAM.

(NO TEXT IN THIS SECTION)

conEdison

JOB NO: BED-798 TEST PIT # 14

PREPARED BY: I.Eydelman DATE: 10.20.2014

CHECKED BY: A.Owens DATE: 10.20.2014

JOB NAME: N Flatbush Av/Atlantic Yard Streetscape LOCATION: E/S FLATBUSH AVENUE

PURPOSE: LOCATE UNDERGROUND FACILITIES 40' S/S/C PROSPECT PL.

DATE OF EXCAVATION: 10.13.2014 CONTRACT SHEET NO: ___ OF ___

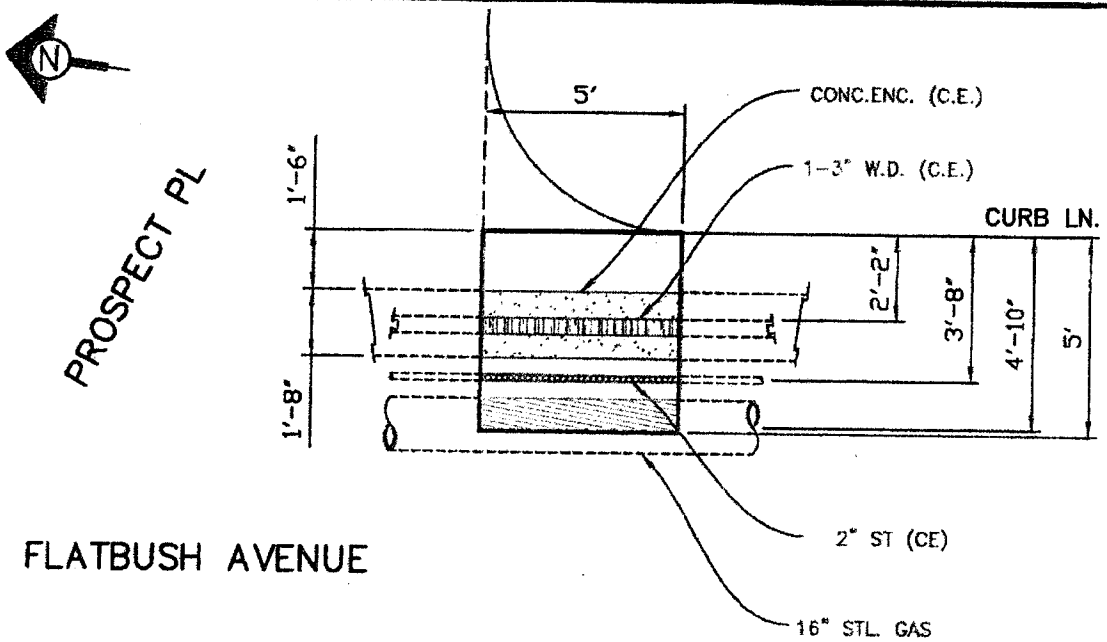

PLAN

N.T.S

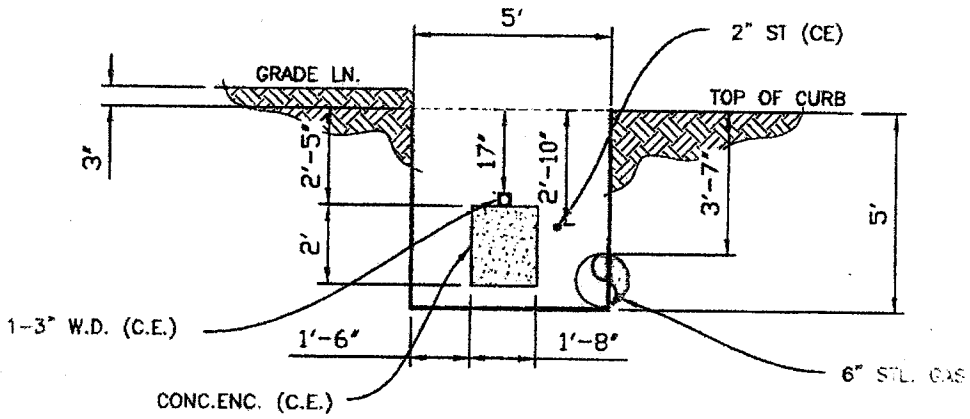

PROFILE – LOOKING SOUTH

N.T.S.

conEdison

JOB NO: BED-798 TEST PIT # 15

PREPARED BY: I.Eydelman DATE: 9.9.2014

CHECKED BY: A.Owens DATE: 9.11.2014

JOB NAME: North Flatbush Av/Atlantic Yard Streetscape

PURPOSE: LOCATE UG ELEC.SYSTEM FOR TYPE 3 CB REQUEST

DATE OF EXCAVATION: 9.4.2014

LOCATION: E/S 8th AVENUE
30' S/S/C ST. JOHNS PLACE

CONTRACT SHEET NO: ___ OF ___

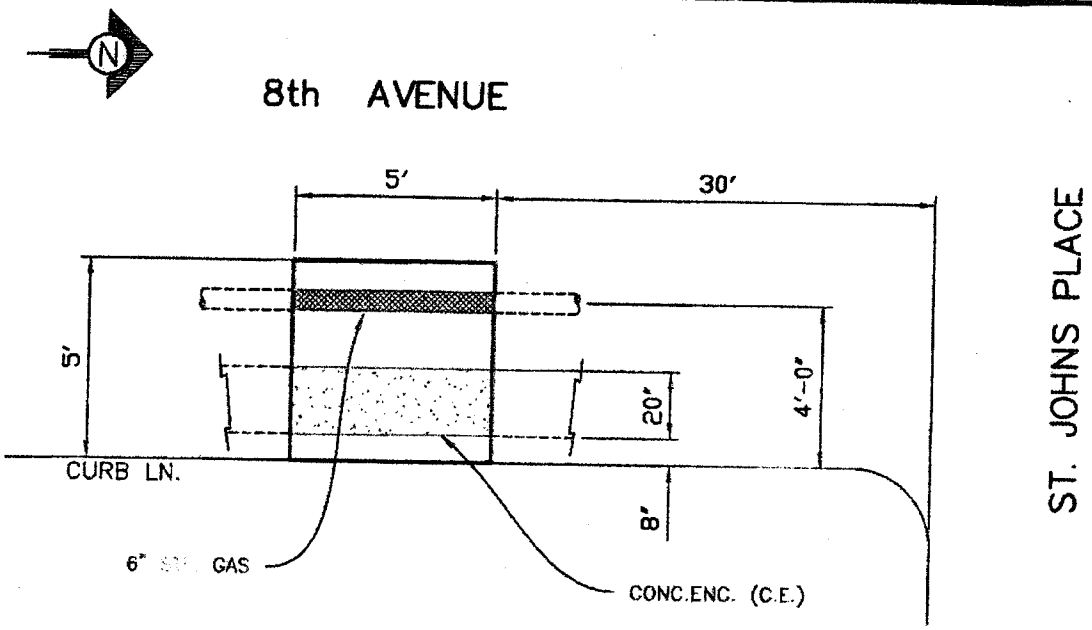

PLAN
N.T.S

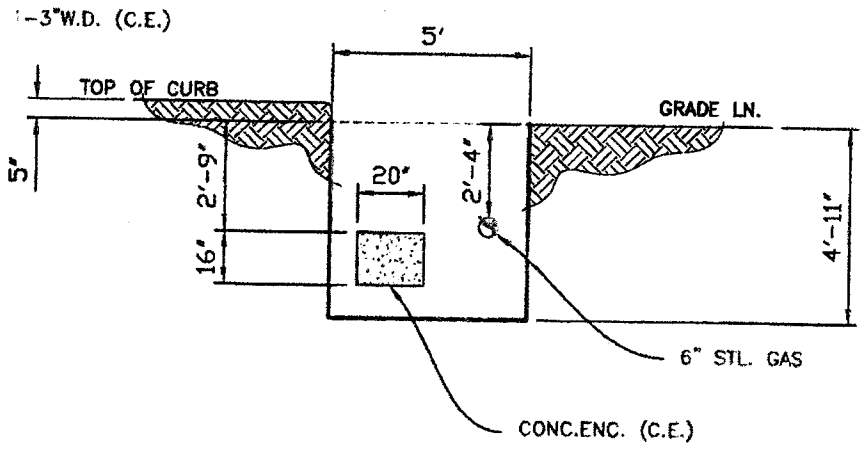

PROFILE – LOOKING SOUTH
N.T.S.

conEdison

JOB NO: BED-798 TEST PIT # 16

PREPARED BY: I.Eydelman DATE: 9.30.2014

CHECKED BY: A.Owens DATE: 9.30.2014

JOB NAME: N Flatbush Av/Atlantic Yard Streetscape LOCATION: W/S FLATBUSH AVENUE 15' S/S/C STERLING PLACE

PURPOSE: LOCATE UNDERGROUND FACILITIES

DATE OF EXCAVATION: 9.17.2014 CONTRACT SHEET NO: ____ OF ____

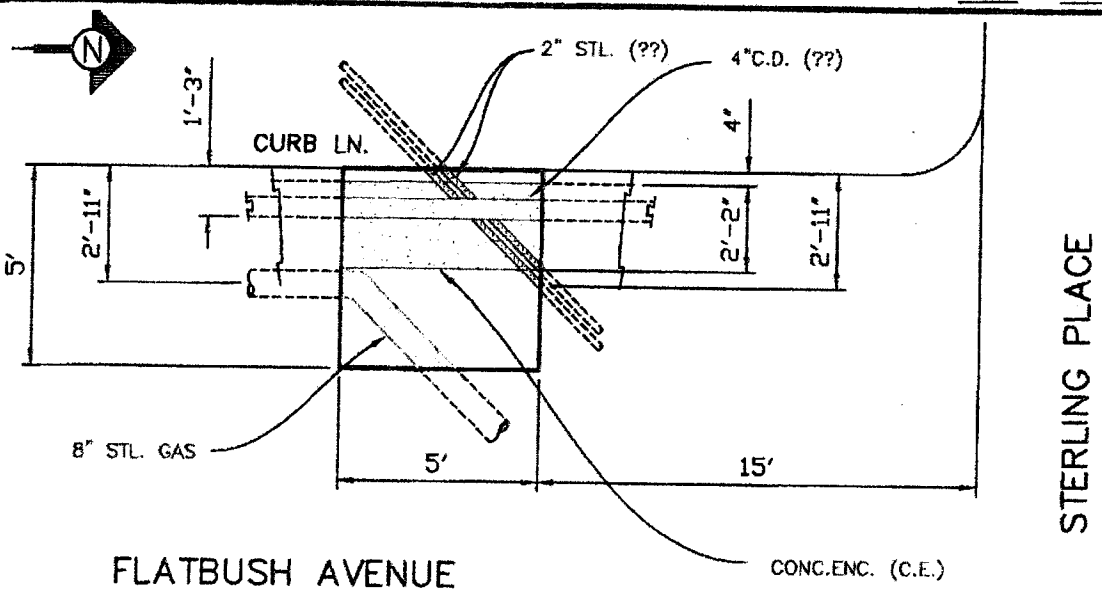

PLAN

N.T.S

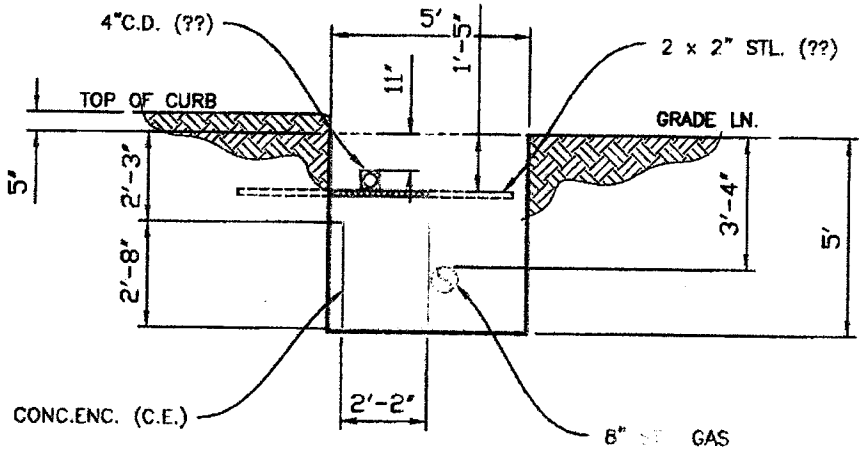

PROFILE – LOOKING NORTH

N.T.S.

verizon

JOB NO.: BED798
JOB: REPLACEMENT OF TRUNK WATER MAIN IN FLATBUSH AVENUE
TEST PIT #: 1
TP DATE: 08/27/2016
INSPECTOR: VC

LOCATION: S/S OF BALTIC STREET W/O 5TH AVENUE
PURPOSE: LOCATE EXISTING UNDERGROUND FACILITIES
DIMENSION: 8'-0"X5'-3"X2'-4" VOLUME: 3.6 CY SHEET NO. 1 OF 18

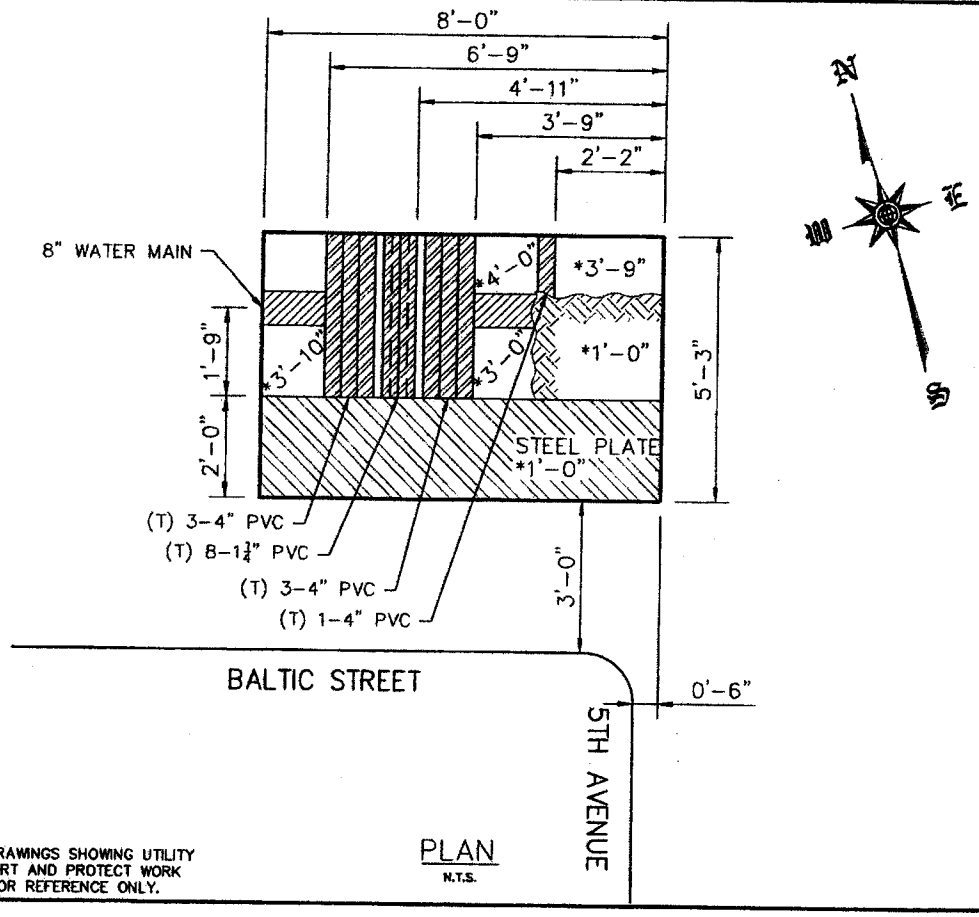

NOTE:
1. ALL DRAWINGS SHOWING UTILITY SUPPORT AND PROTECT WORK ARE FOR REFERENCE ONLY.

PLAN
N.T.S.

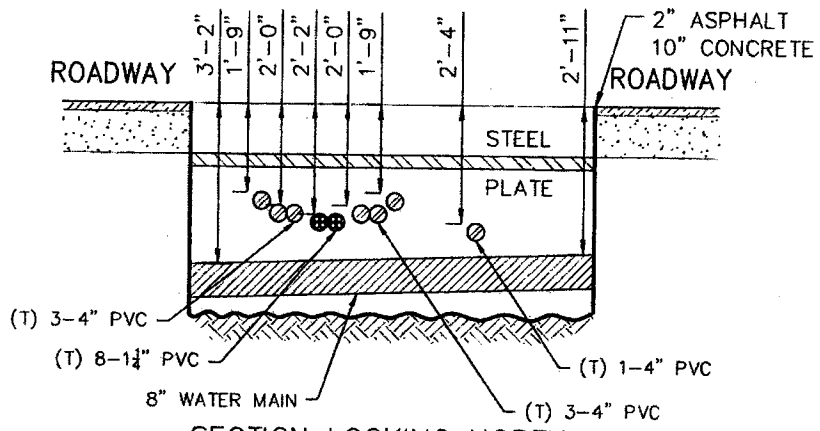

SECTION LOOKING NORTH

verizon

JOB NO.: BED798 TEST PIT #: 2

JOB: REPLACEMENT OF TRUNK WATER MAIN IN FLATBUSH AVENUE TP DATE: 08/27/2016

INSPECTOR: VC

LOCATION: E/S OF 6TH AVENUE N/O LINCOLN PLACE

PURPOSE: LOCATE EXISTING UNDERGROUND FACILITIES

DIMENSION: 7'-9"X5'-0"X2'-6" VOLUME: 3.6 CY SHEET NO. 2 OF 18

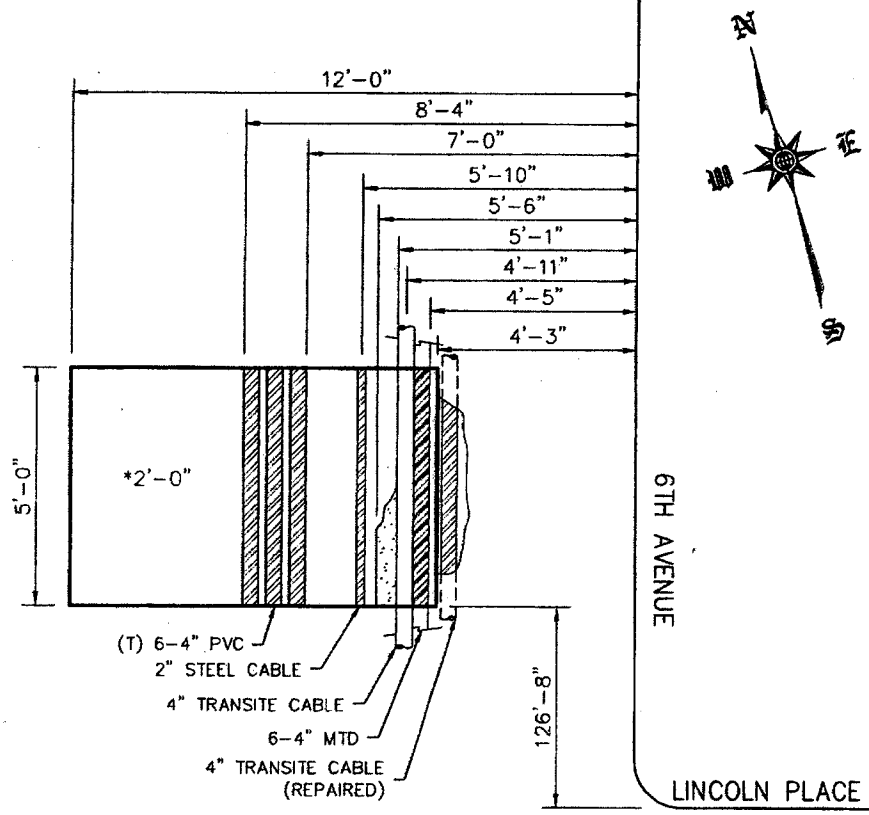

NOTE:
1. ALL DRAWINGS SHOWING UTILITY SUPPORT AND PROTECT WORK ARE FOR REFERENCE ONLY.

PLAN
N.T.S.

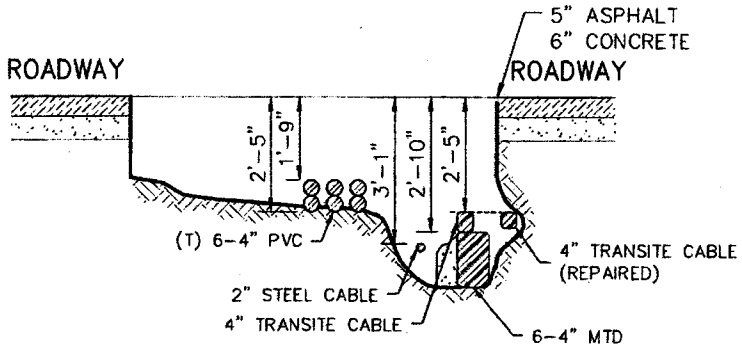

SECTION LOOKING NORTH

verizon

JOB NO.: BED798
JOB: REPLACEMENT OF TRUNK WATER MAIN IN FLATBUSH AVENUE
TEST PIT #: 3
TP DATE: 09/06/2016
INSPECTOR: VC

LOCATION: N/S ST. JOHNS PLACE E/O 6TH AVENUE
PURPOSE: LOCATE EXISTING UNDERGROUND FACILITIES
DIMENSION: 6'-0"X5'-0"X3'-3" VOLUME: 3.6 CY SHEET NO. 3 OF 18

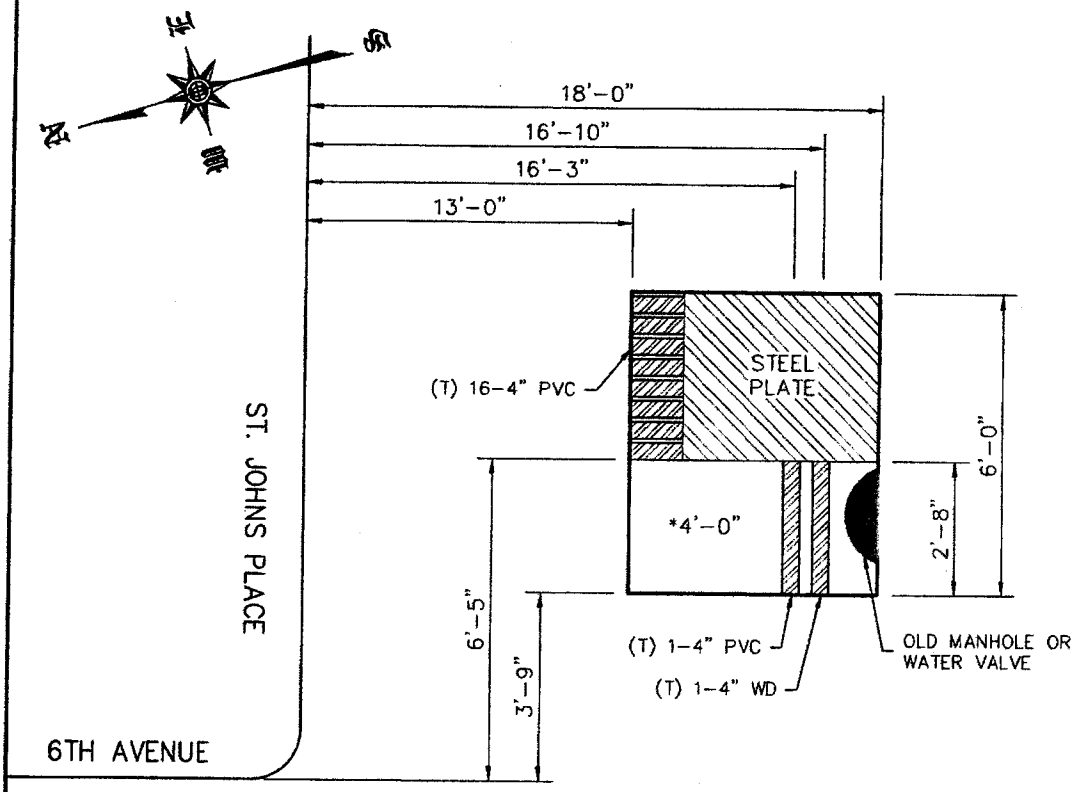

NOTE:
1. ALL DRAWINGS SHOWING UTILITY SUPPORT AND PROTECT WORK ARE FOR REFERENCE ONLY.

PLAN
N.T.S.

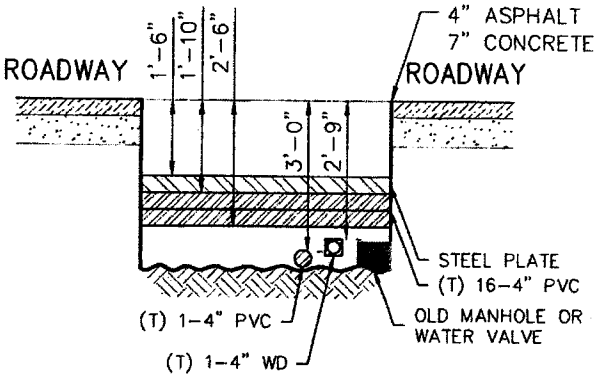

SECTION LOOKING EAST

verizon

JOB NO.: BED798

JOB: REPLACEMENT OF TRUNK WATER MAIN IN FLATBUSH AVENUE

TEST PIT #: 4

TP DATE: 09/06/2016

INSPECTOR: VC

LOCATION: E/S 6TH AVENUE S/O STERLING PLACE

PURPOSE: LOCATE EXISTING UNDERGROUND FACILITIES

DIMENSION: 6'-0"X4'-8"X2'-10" VOLUME: 2.9 CY SHEET NO. 4 OF 18

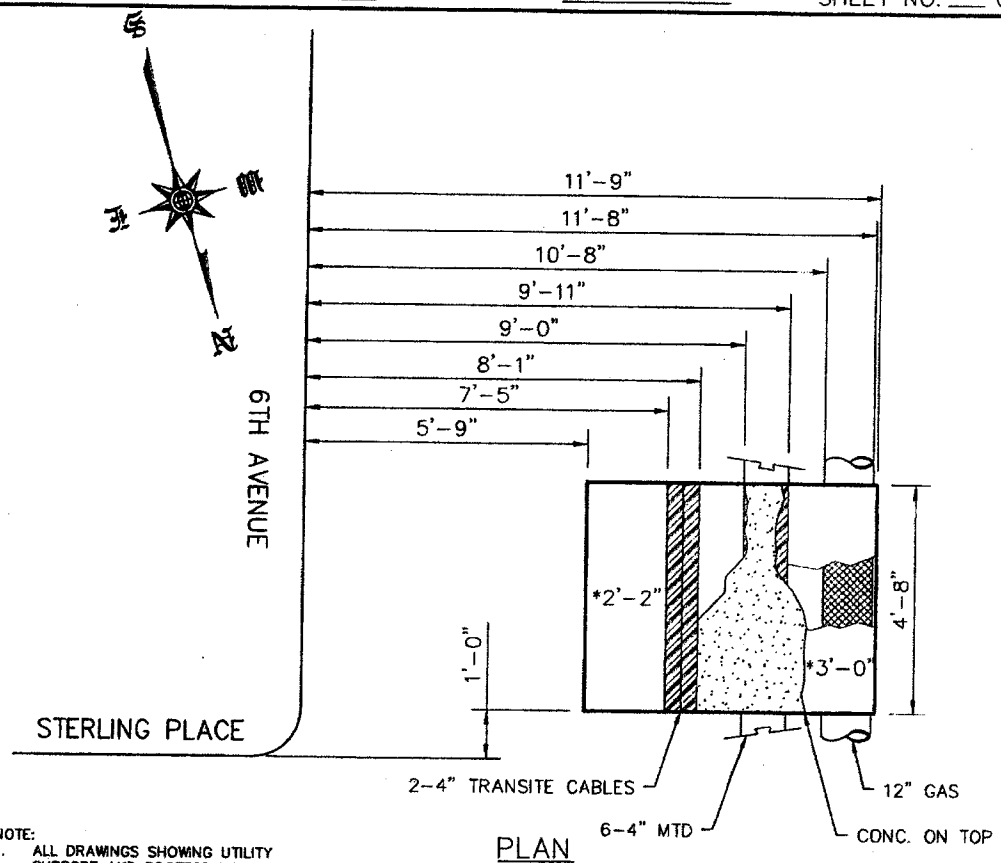

NOTE:
1. ALL DRAWINGS SHOWING UTILITY SUPPORT AND PROTECT WORK ARE FOR REFERENCE ONLY.

PLAN
N.T.S.

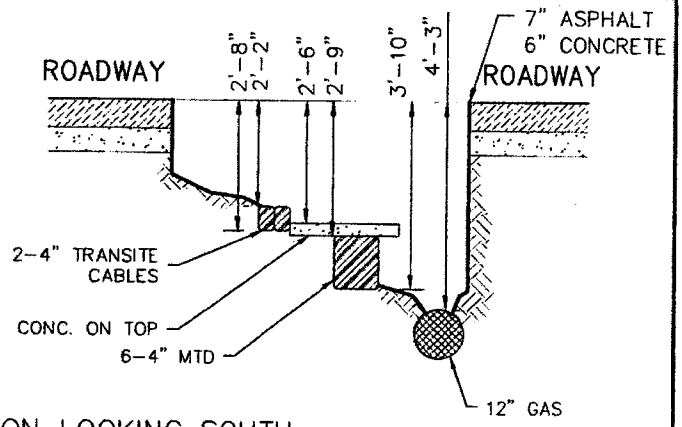

SECTION LOOKING SOUTH

verizon

JOB NO.: BED798 TEST PIT #: 5

JOB: REPLACEMENT OF TRUNK WATER MAIN IN FLATBUSH AVENUE TP DATE: 09/06/2016

INSPECTOR: VC

LOCATION: N/S STERLING PLACE E/O 6TH AVENUE

PURPOSE: LOCATE EXISTING UNDERGROUND FACILITIES

DIMENSION: 6'-0"X5'-0"X3'-6" VOLUME: 3.9 CY SHEET NO. 5 OF 18

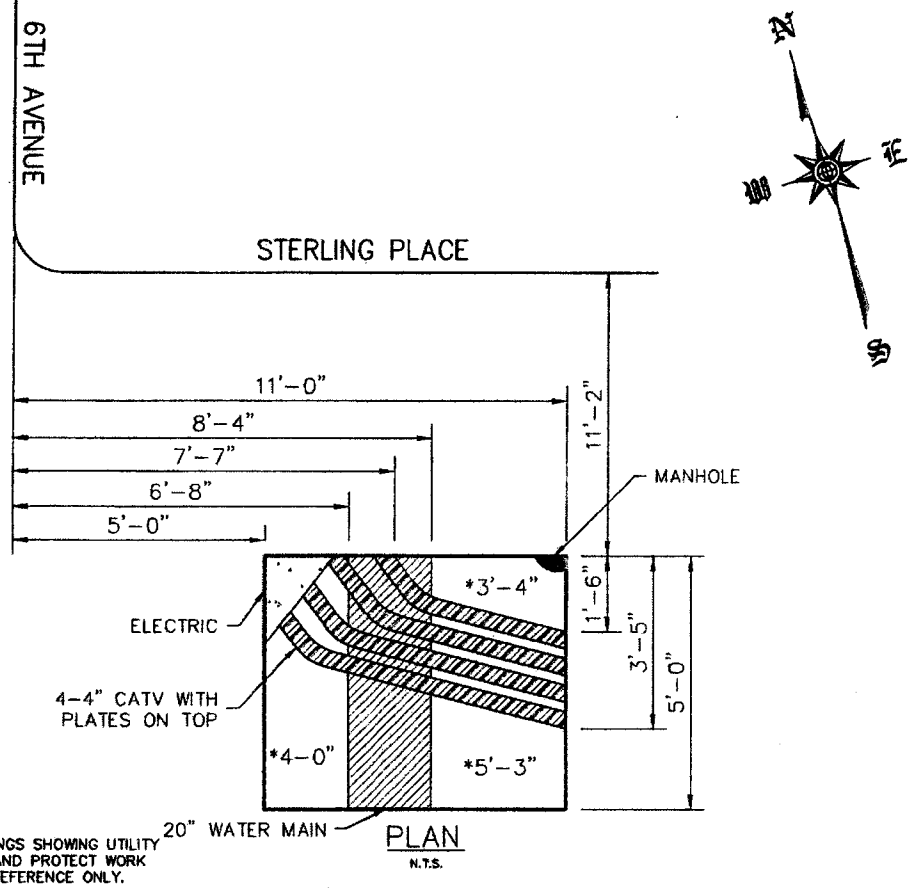

PLAN
N.T.S.

NOTE:
1. ALL DRAWINGS SHOWING UTILITY SUPPORT AND PROTECT WORK ARE FOR REFERENCE ONLY.

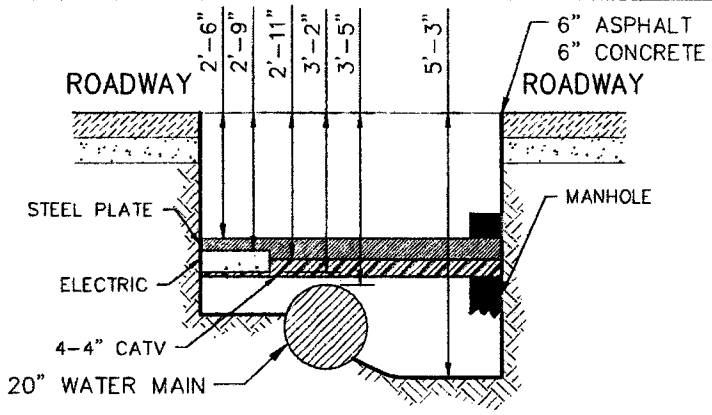

SECTION LOOKING NORTH

verizon

JOB NO.: BED798

JOB: REPLACEMENT OF TRUNK WATER MAIN IN FLATBUSH AVENUE

TEST PIT #: 8

TP DATE: 08-27-16

INSPECTOR: VC

LOCATION: E/S 6TH AVENUE S/O BERKELEY PLACE

PURPOSE: LOCATE EXISTING UNDERGROUND FACILITIES

DIMENSION: 6'-10"X5'-6"X4'-8"

VOLUME: 6.5 CY

SHEET NO. 8 OF 18

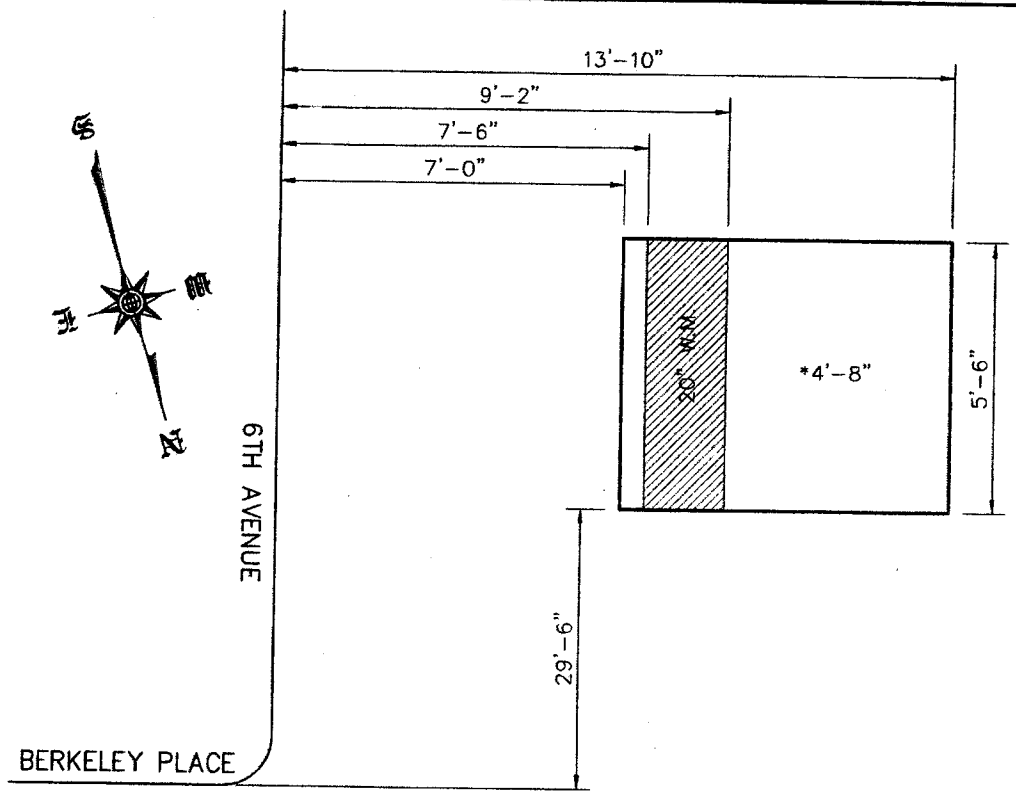

NOTE:
1. ALL DRAWINGS SHOWING UTILITY SUPPORT AND PROTECT WORK ARE FOR REFERENCE ONLY.

PLAN
N.T.S.

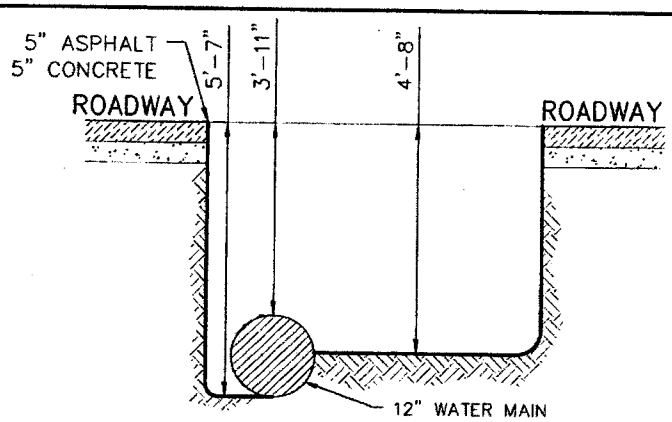

SECTION LOOKING SOUTH

verizon

JOB NO.: BED798
JOB: REPLACEMENT OF TRUNK WATER MAIN IN FLATBUSH AVENUE
TEST PIT #: 9
TP DATE: 09/07/16
INSPECTOR: TM

LOCATION: N/S BERKELEY PLACE E/O 6TH AVENUE
PURPOSE: LOCATE EXISTING UNDERGROUND FACILITIES
DIMENSION: 6'-2"X5'-0"X5'-0" VOLUME: 5.7 CY SHEET NO. 9 OF 18

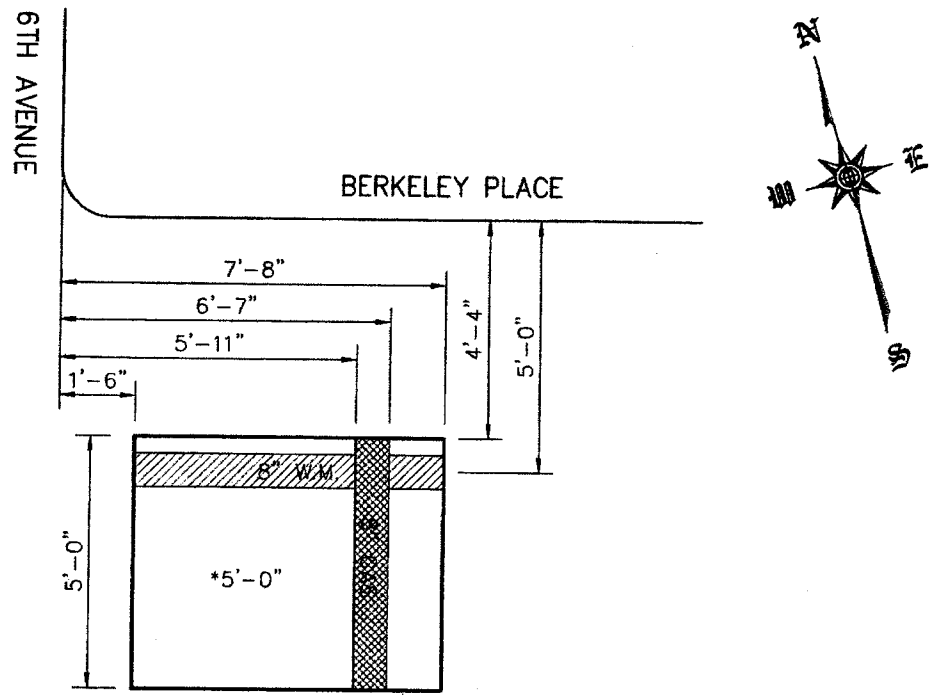

NOTE:
1. ALL DRAWINGS SHOWING UTILITY SUPPORT AND PROTECT WORK ARE FOR REFERENCE ONLY.

PLAN
N.T.S.

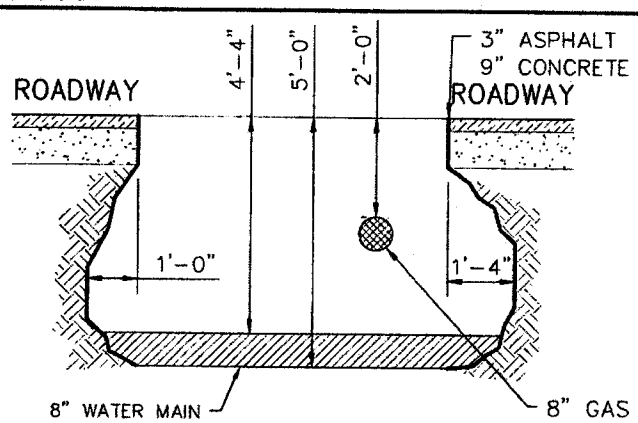

SECTION LOOKING NORTH

verizon

JOB NO.: BED798
JOB: REPLACEMENT OF TRUNK WATER MAIN IN FLATBUSH AVENUE
TEST PIT #: 10
TP DATE: 08/27/16
INSPECTOR: VC

LOCATION: E/S 6TH AVENUE N/O BERKELEY PLACE
PURPOSE: LOCATE EXISTING UNDERGROUND FACILITIES
DIMENSION: 7'-11"X4'-10"X4'-3" VOLUME: 6.0 CY SHEET NO. 10 OF 18

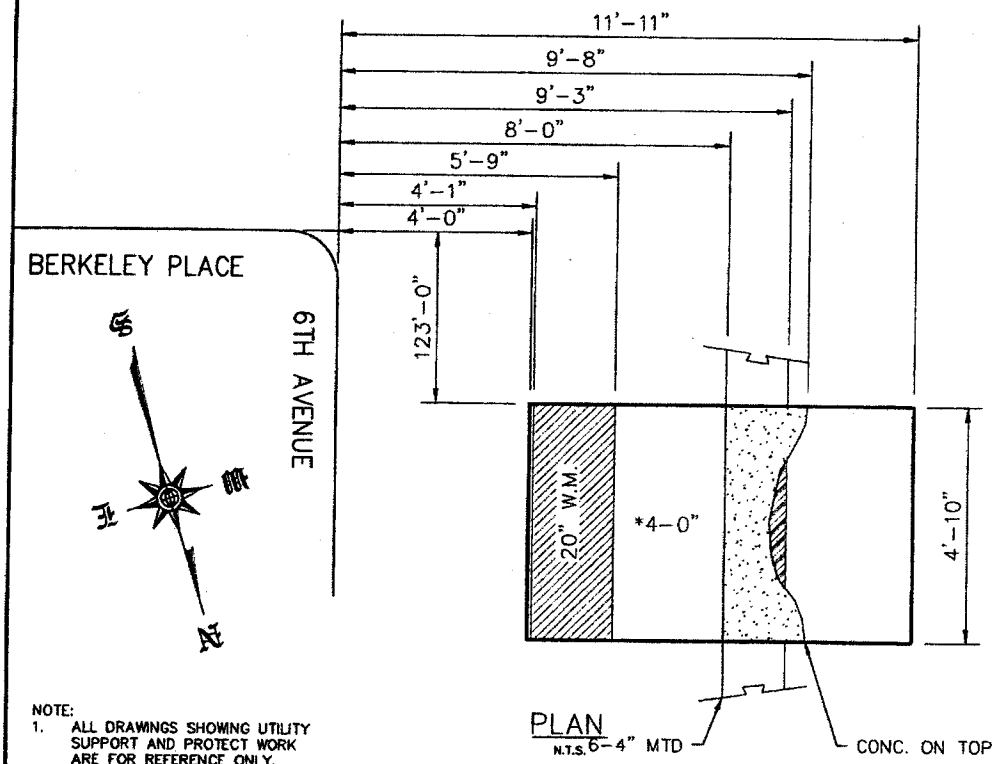

PLAN
N.T.S.

NOTE:
1. ALL DRAWINGS SHOWING UTILITY SUPPORT AND PROTECT WORK ARE FOR REFERENCE ONLY.

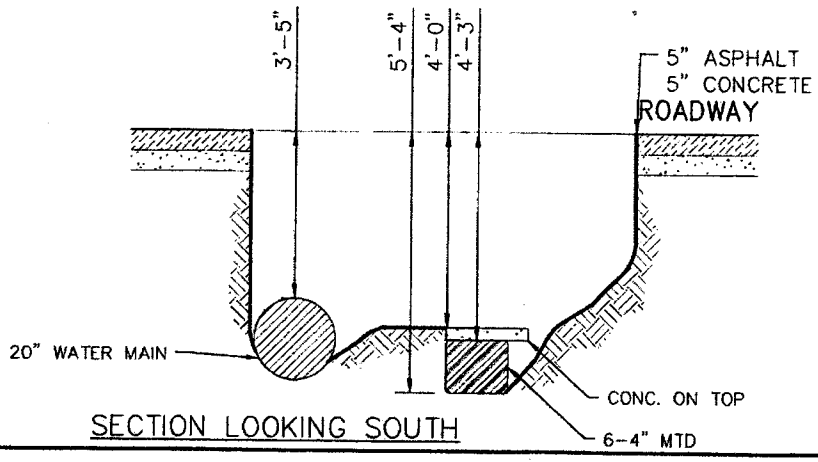

SECTION LOOKING SOUTH

verizon	JOB NO.: BED798	TEST PIT #: 11
	JOB: REPLACEMENT OF TRUNK WATER MAIN IN FLATBUSH AVENUE	TP DATE: 08/27/16
		INSPECTOR: VC

LOCATION: N/S LINCOLN PLACE E/O 6TH AVENUE

PURPOSE: LOCATE EXISTING UNDERGROUND FACILITIES

DIMENSION: 6'-0"X4'-9"X4'-8" VOLUME: 4.9 CY SHEET NO. 11 OF 18

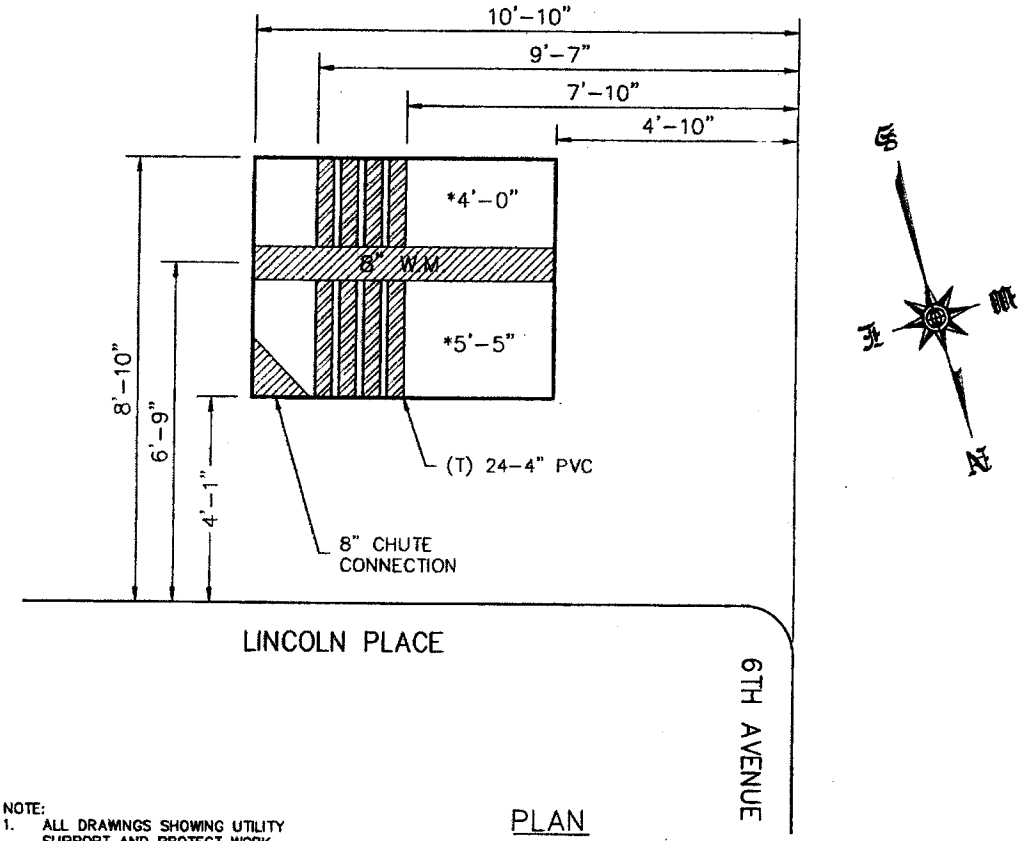

NOTE:
1. ALL DRAWINGS SHOWING UTILITY SUPPORT AND PROTECT WORK ARE FOR REFERENCE ONLY.

PLAN
N.T.S.

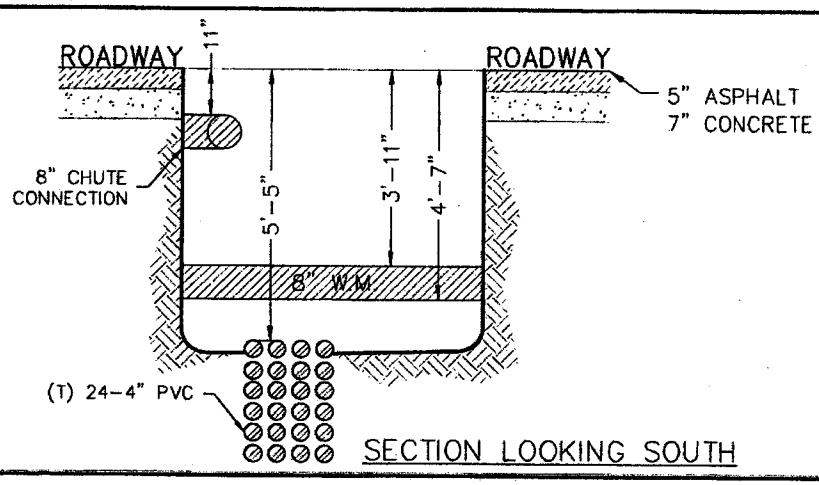

SECTION LOOKING SOUTH

verizon

JOB NO.: BED798
JOB: REPLACEMENT OF TRUNK WATER MAIN IN FLATBUSH AVENUE
TEST PIT #: 12
TP DATE: 09/07/16
INSPECTOR: TM

LOCATION: W/S 8TH AVENUE N/O LINCOLN PLACE
PURPOSE: LOCATE EXISTING UNDERGROUND FACILITIES
DIMENSION: 8'-2"X5'-0"X3'-4" VOLUME: 5.0 CY SHEET NO. 12 OF 18

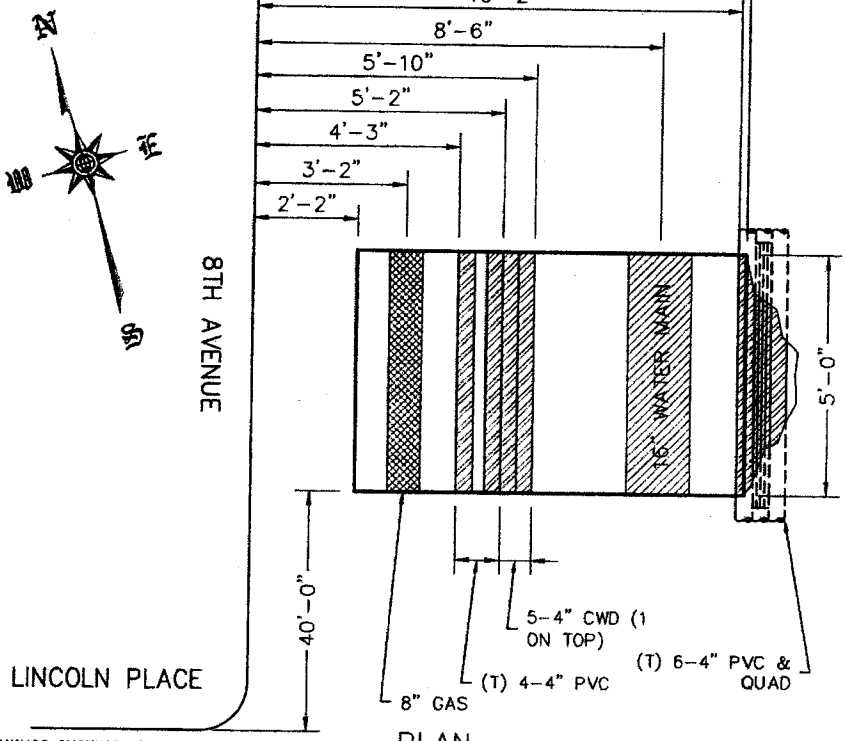

PLAN
N.T.S.

NOTE:
1. ALL DRAWINGS SHOWING UTILITY SUPPORT AND PROTECT WORK ARE FOR REFERENCE ONLY.

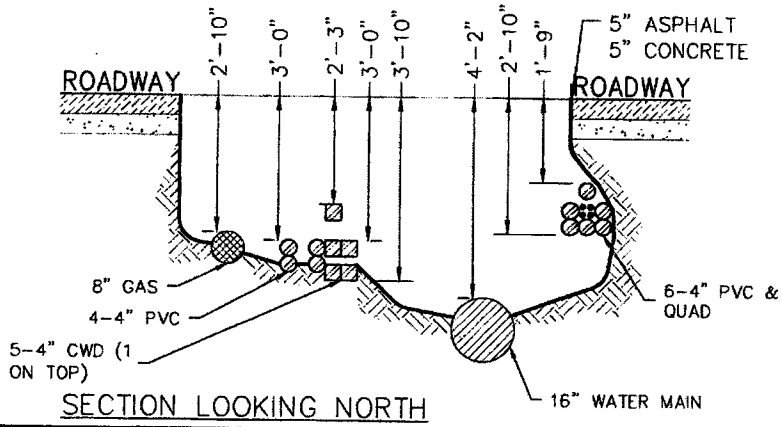

SECTION LOOKING NORTH

verizon

JOB NO.: BED798 TEST PIT #: 13

JOB: REPLACEMENT OF TRUNK WATER MAIN IN FLATBUSH AVENUE TP DATE: 09/07/16

INSPECTOR: TM

LOCATION: W/S 8TH AVENUE S/O ST. JOHNS PLACE

PURPOSE: LOCATE EXISTING UNDERGROUND FACILITIES

DIMENSION: 8'-0"X5'-0"X3'-3" VOLUME: 4.8 CY SHEET NO. 13 OF 18

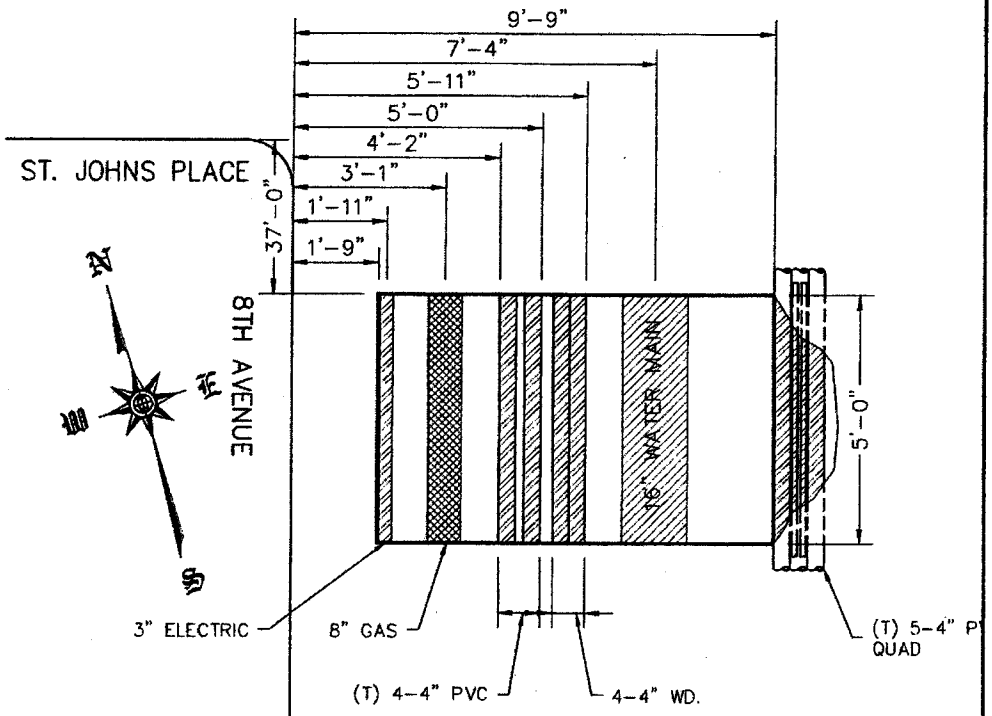

NOTE:
1. ALL DRAWINGS SHOWING UTILITY SUPPORT AND PROTECT WORK ARE FOR REFERENCE ONLY.

PLAN
N.T.S.

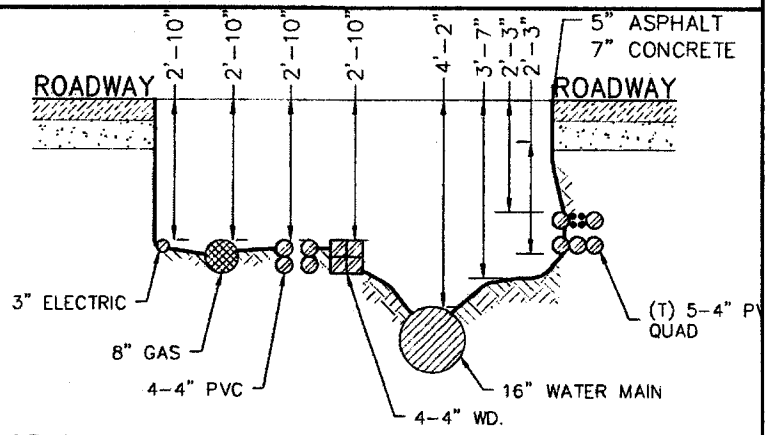

SECTION LOOKING NORTH

verizon

JOB NO.: BED798

JOB: REPLACEMENT OF TRUNK WATER MAIN IN FLATBUSH AVENUE

TEST PIT #: 14

TP DATE: 09/08/16

INSPECTOR: IN

LOCATION: W/S 8TH AVENUE N/O ST. JOHNS PLACE

PURPOSE: LOCATE EXISTING UNDERGROUND FACILITIES

DIMENSION: 6'-1"X5'-1"X3'-2" VOLUME: 3.6 CY SHEET NO. 14 OF 18

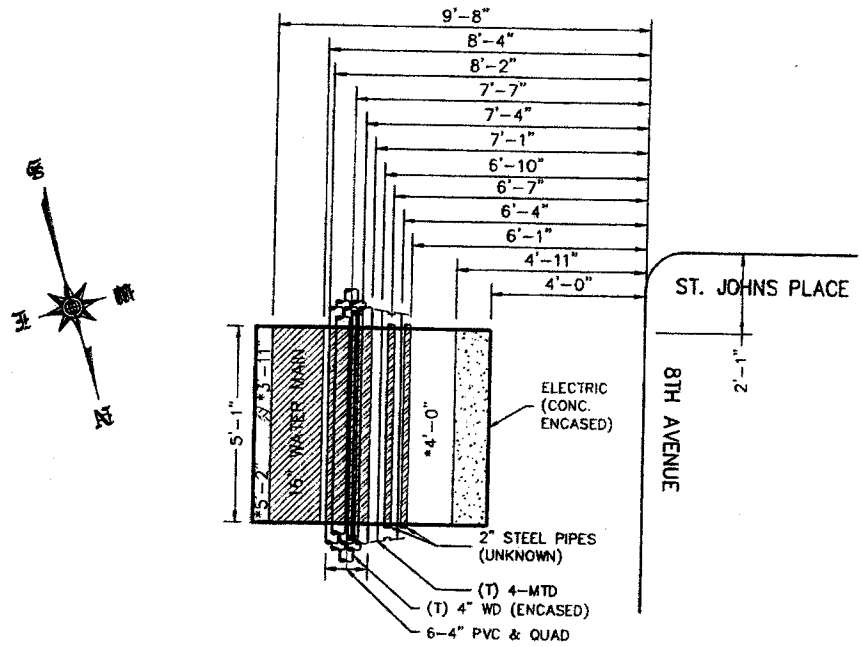

NOTE:
1. ALL DRAWINGS SHOWING UTILITY SUPPORT AND PROTECT WORK ARE FOR REFERENCE ONLY.

PLAN
N.T.S.

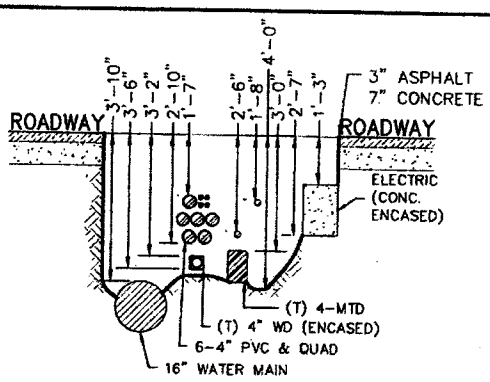

SECTION LOOKING SOUTH

verizon	JOB NO.: BED798	TEST PIT #: 15
	JOB: REPLACEMENT OF TRUNK WATER MAIN IN FLATBUSH AVENUE	TP DATE: 09/08/16
		INSPECTOR: IN

LOCATION: N/S FLATBUSH AVE. W/STERLING PLACE

PURPOSE: LOCATE EXISTING UNDERGROUND FACILITIES

DIMENSION: 6'-1"X5'-1"X3'-8" VOLUME: 4.2 CY SHEET NO. 15 OF 18

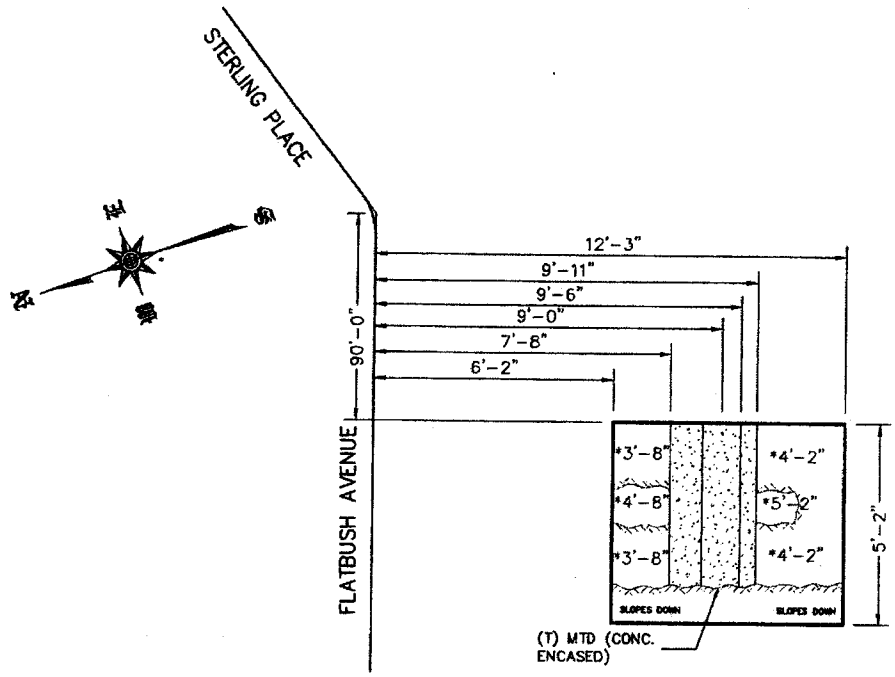

NOTE:
1. ALL DRAWINGS SHOWING UTILITY SUPPORT AND PROTECT WORK ARE FOR REFERENCE ONLY.

PLAN
N.T.S.

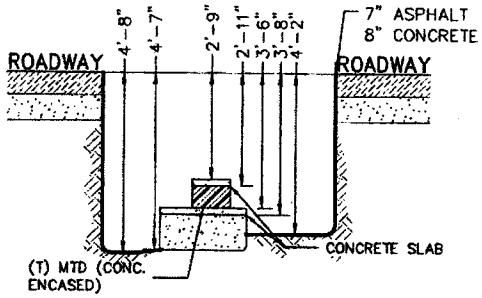

SECTION LOOKING EAST

verizon

JOB NO.: BED798
JOB: REPLACEMENT OF TRUNK WATER MAIN IN FLATBUSH AVENUE
TEST PIT #: 16
TP DATE: 9/9/16
INSPECTOR: YM

LOCATION: INT. FLATBUSH AVENUE AND STERLING PLACE
PURPOSE: LOCATE EXISTING UNDERGROUND FACILITIES
DIMENSION: 10'-0"X5'-0"X2'-6" VOLUME: 4.6 CY SHEET NO. 16 OF 18

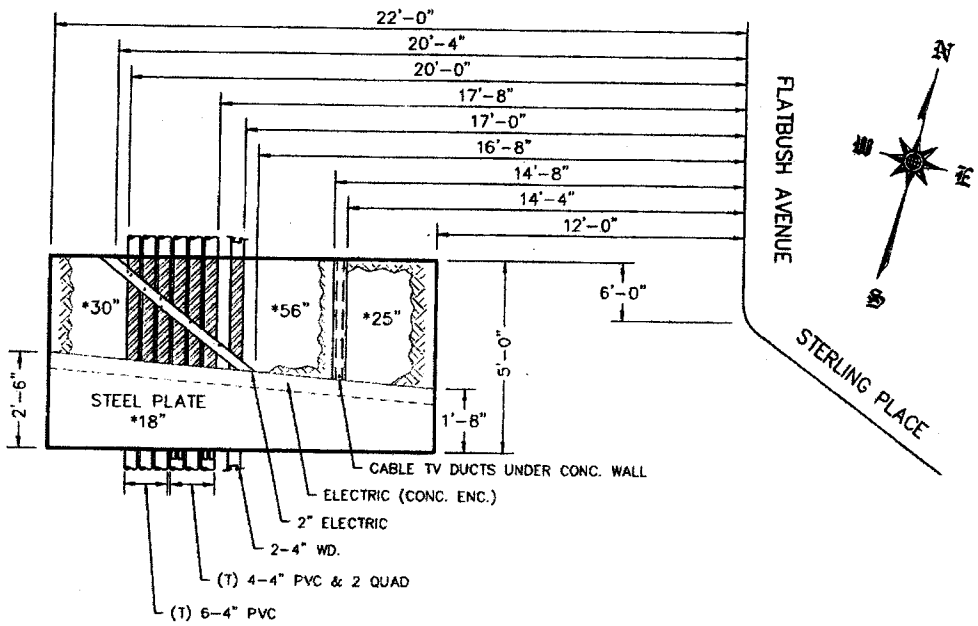

NOTE:
1. ALL DRAWINGS SHOWING UTILITY SUPPORT AND PROTECT WORK ARE FOR REFERENCE ONLY.

PLAN
N.T.S.

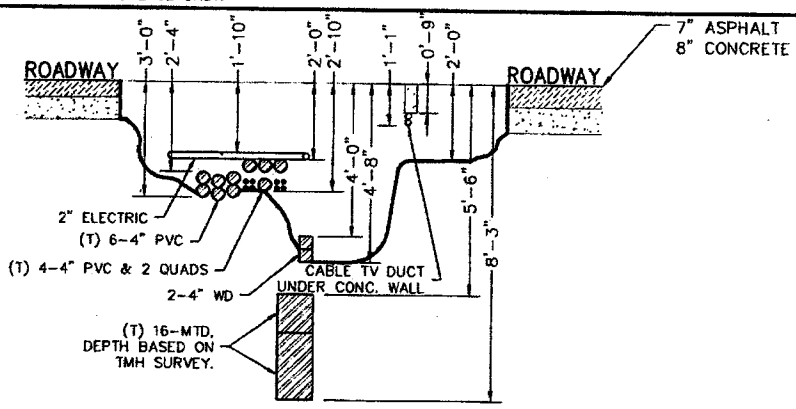

SECTION LOOKING NORTH

verizon

JOB NO.: BED798
JOB: REPLACEMENT OF TRUNK WATER MAIN IN FLATBUSH AVENUE
TEST PIT #: 17
TP DATE: 09/08/16
INSPECTOR: IN

LOCATION: N/S FLATBUSH AVE. E/O STERLING PLACE
PURPOSE: LOCATE EXISTING UNDERGROUND FACILITIES
DIMENSION: 6'-1"X5'-0"X3'-8" VOLUME: 4.1 CY SHEET NO. 17 OF 18

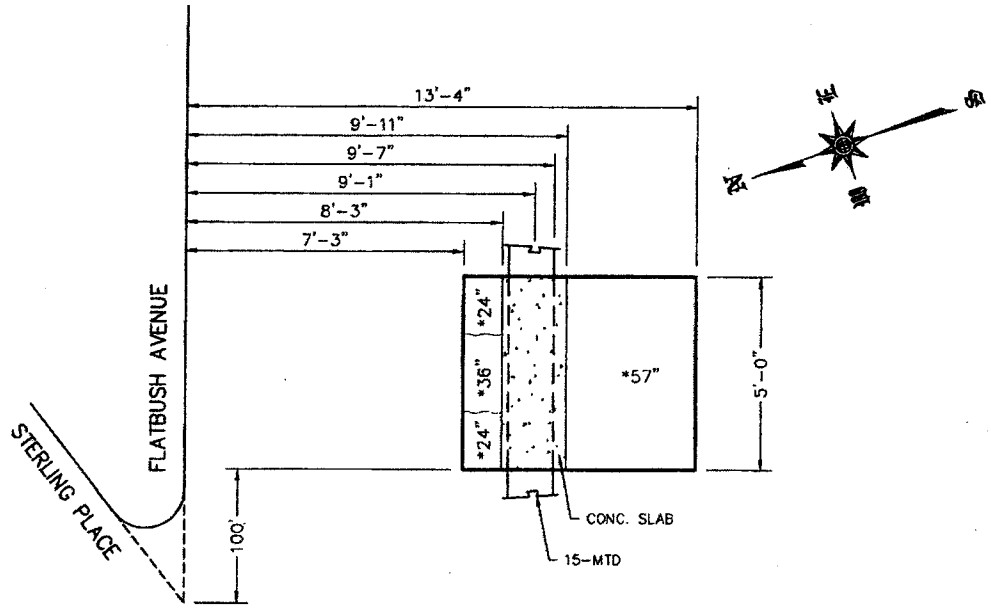

NOTE:
1. ALL DRAWINGS SHOWING UTILITY SUPPORT AND PROTECT WORK ARE FOR REFERENCE ONLY.

PLAN
N.T.S.

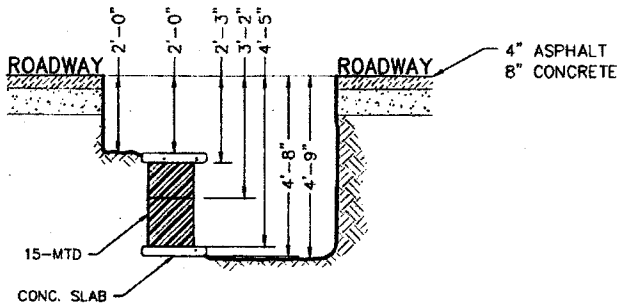

SECTION LOOKING EAST

verizon	JOB NO.: BED798	TEST PIT #: 18
	JOB: REPLACEMENT OF TRUNK WATER MAIN IN FLATBUSH AVENUE	TP DATE: 09/08/16
		INSPECTOR: IN

LOCATION: INTERSECTION OF FLATBUSH AVENUE AND 8TH AVENUE

PURPOSE: LOCATE EXISTING UNDERGROUND FACILITIES

DIMENSION: 8'-0"X5'-1"X3'-0" VOLUME: 4.5 CY SHEET NO. 18 OF 18

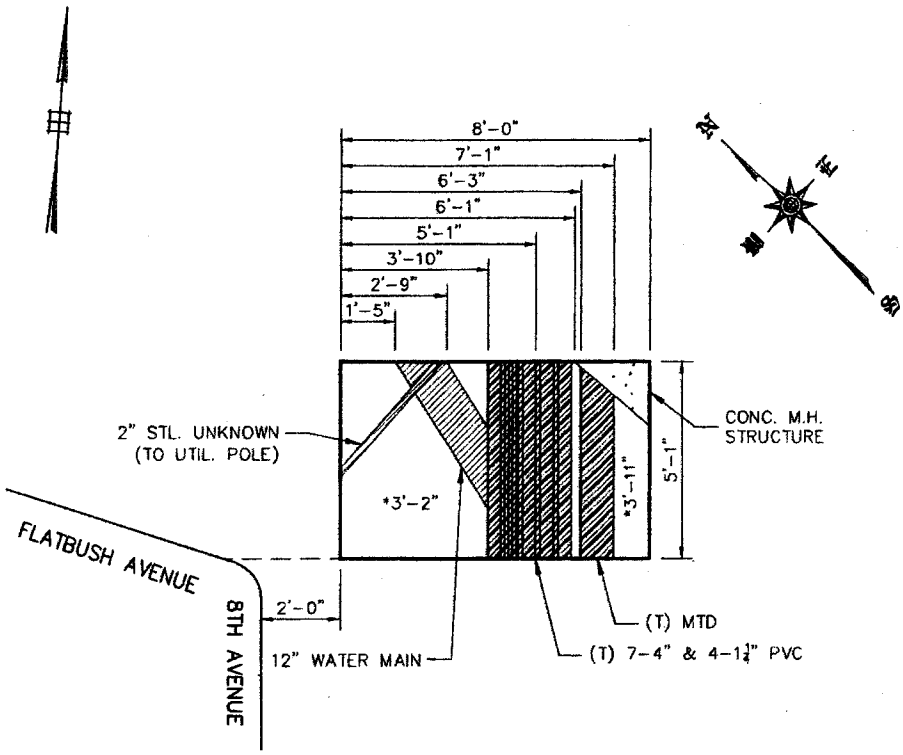

NOTE:
1. ALL DRAWINGS SHOWING UTILITY SUPPORT AND PROTECT WORK ARE FOR REFERENCE ONLY.

PLAN
N.T.S.

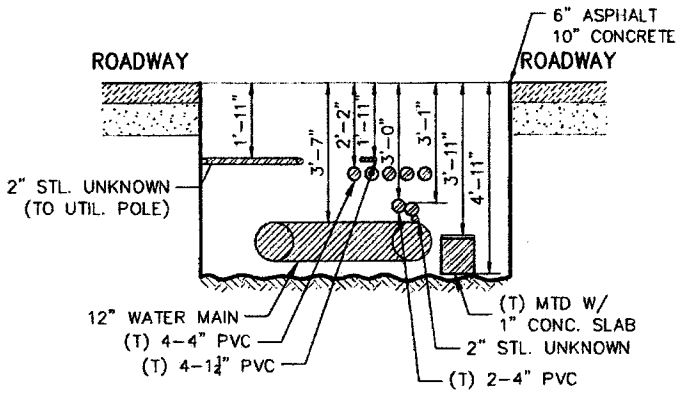

SECTION LOOKING EAST

CITY OF NEW YORK
DEPARTMENT OF DESIGN AND CONSTRUCTION
DIVISION OF INFRASTRUCTURE

ADDENDA CONTROL SHEET

BID OPENING DATE: MARCH 7, 2017

PROJECT NO.: BED798

TITLE: REPLACEMENT OF TRUNK AND DISTRIBUTION WATER MAINS, COMBINED SEWER AND APPURTENANCES IN FLATBUSH AVENUE BETWEEN STERLING PLACE AND 8TH AVENUE, ETC., BOROUGH OF BROOKLYN.

ADDENDA ISSUED	No. OF DRAWINGS	DATE
#1: Additional Amendments		3/1/2017

ATTACH TO CONTRACT DOCUMENTS

THE CITY OF NEW YORK
DEPARTMENT OF DESIGN AND CONSTRUCTION
INFRASTRUCTURE DIVISION
BUREAU OF DESIGN

PROJECT ID: BED798

REPLACEMENT OF TRUNK AND DISTRIBUTION WATER MAINS, COMBINED SEWER AND APPURTENANCES IN FLATBUSH AVENUE BETWEEN STERLING PLACE AND 8TH AVENUE, ETC.
Together With All Work Incidental Thereto
BOROUGH OF BROOKLYN

ADDENDUM NO. 1

DATED: March 1, 2017

This Addendum is issued for the purpose of amending the requirements of the contract documents and is hereby made part of said contract documents to the same extent as if it was originally included therein.

(1) For additional information, see the attached one (1) page of "Questions Submitted by Bidders and DDC's Responses".

By signing in the space provided below, the bidder acknowledges receipt of the one (1) page of this Addendum plus one (1) page of Attachment.

THIS ADDENDUM MUST BE SIGNED BY ALL BIDDERS AND ATTACHED TO THEIR BIDS.

for Purnima Dhallo
GURDIP SAINI, P.E.
Associate Commissioner/Design I

_____
Name of Bidder

By:_____

QUESTIONS SUBMITTED BY BIDDERS AND RESPONSES PROVIDED BY DDC

QUESTION NO. 1: There is no bid quantity item for 48" x 72" tees on this job. There are three of these and although there is a detail of a 48" outlet on the standard drawings, these are usually done with thick walls and no reinforcing pads. If there is not bid item, we will have to meld them into another bid item. Could you see if you could get these into the bid docs and revised the bid items in enough time so that the other steel fabricators are aware as well as the contractors?

ANSWER NO. 1: 72" X 48" is an outlet as per NYC DEP WATER MAIN STANDARD DRAWING No. 38226-Y-A, "STANDARD FABRICATED CONNECTIONS FOR STEEL MAINS". The cost of this outlet/connection shall be paid to the Contractor under the price bid for item No. 60.25PSO.

NO FURTHER TEXT ON THIS PAGE

Department of Design and Construction

INFRASTRUCTURE DIVISION
BUREAU OF DESIGN

VOLUME 3 OF 3

PROJECT ID: BED798

REPLACEMENT OF TRUNK AND DISTRIBUTION WATER MAINS, COMBINED SEWER AND APPURTENANCES IN FLATBUSH AVENUE BETWEEN STERLING PLACE AND 8TH AVENUE, ETC.

INCLUDING SEWER, WATER MAIN, 8TH AVENUE TRIANGLE STREETSCAPE, NECKDOWNS, STREET LIGHTING, AND TRAFFIC SIGNAL WORK

Together with All Work Incidental Thereto
BOROUGH OF BROOKLYN
CITY OF NEW YORK

_____
Contractor

_____

Dated_____, **20**___

_____